(4) Each owner or operator seeking to comply with the provisions of this subpart by use of an open flare shall keep up-to-date, readily accessible continuous records of the flame or flare pilot flame monitoring specified under § 60.756(c), and up-to-date, readily accessible records of all periods of operation in which the flame or flare pilot flame is absent.

(d) Except as provided in § 60.752(b)(2)(i)(B), each owner or operator subject to the provisions of this subpart shall keep for the life of the collection system an up-to-date, readily accessible plot map showing each existing and planned collector in the system and providing a unique identification location label for each collector.

(1) Each owner or operator subject to the provisions of this subpart shall keep up-to-date, readily accessible records of the installation date and location of all newly installed collectors as specified under § 60.755(b).

(2) Each owner or operator subject to the provisions of this subpart shall keep readily accessible documentation of the nature, date of deposition, amount, and location of asbestos-containing or nondegradable waste excluded from collection as provided in § 60.759(a)(3)(i) as well as any nonproductive areas excluded from collection as provided in § 60.759(a)(3)(ii).

(e) Except as provided in § 60.752(b)(2)(i)(B), each owner or operator subject to the provisions of this subpart shall keep for at least 5 years up-to-date, readily accessible records of all collection and control system exceedances of the operational standards in § 60.753, the reading in the subsequent month whether or not the second reading is an exceedance, and the location of each exceedance.

(f) Landfill owners or operators who convert design capacity from volume to mass or mass to volume to demonstrate that landfill design capacity is less than 2.5 million megagrams or 2.5 million cubic meters, as provided in the definition of ''design capacity'', shall keep readily accessible, on-site records of the annual recalculation of site-specific density, design capacity, and the supporting documentation. Offsite records may be maintained if they are retrievable within 4 hours. Either paper copy or electronic formats are acceptable.

[61 FR 9919, Mar. 12, 1996, as amended at 63 FR 32752, June 16, 1998; 65 FR 18909, Apr. 10, 2000]

§ 60.759 Specifications for active collection systems.

(a) Each owner or operator seeking to comply with § 60.752(b)(2)(i) shall site active collection wells, horizontal collectors, surface collectors, or other extraction devices at a sufficient density throughout all gas producing areas using the following procedures unless alternative procedures have been approved by the Administrator as provided in § 60.752(b)(2)(i)(C) and (D):

(1) The collection devices within the interior and along the perimeter areas shall be certified to achieve comprehensive control of surface gas emissions by a professional engineer. The following issues shall be addressed in the design: depths of refuse, refuse gas generation rates and flow characteristics, cover properties, gas system expandibility, leachate and condensate management, accessibility, compatibility with filling operations, integration with closure end use, air intrusion control, corrosion resistance, fill settlement, and resistance to the refuse decomposition heat.

(2) The sufficient density of gas collection devices determined in paragraph (a)(1) of this section shall address landfill gas migration issues and augmentation of the collection system through the use of active or passive systems at the landfill perimeter or exterior.

(3) The placement of gas collection devices determined in paragraph (a)(1) of this section shall control all gas producing areas, except as provided by paragraphs (a)(3)(i) and (a)(3)(ii) of this section.

(i) Any segregated area of asbestos or nondegradable material may be excluded from collection if documented as provided under § 60.758(d). The documentation shall provide the nature, date of deposition, location and amount of asbestos or nondegradable material deposited in the area, and shall be provided to the Administrator upon request.

(ii) Any nonproductive area of the landfill may be excluded from control, provided that the total of all excluded areas can be shown to contribute less than 1 percent of the total amount of NMOC emissions from the landfill. The amount, location, and age of the material shall be documented and provided to the Administrator upon request. A separate NMOC emissions estimate shall be made for each section proposed for exclusion, and the sum of all such sections shall be compared to the NMOC emissions estimate for the entire landfill. Emissions from each section shall be computed using the following equation:

$$Q_i = 2\ k\ L_o\ M_i\ (e^{-kt}\ i)\ (C_{NMOC})\ (3.6 \times 10^{-9})$$

where,

Q_i = NMOC emission rate from the ith section, megagrams per year

k = methane generation rate constant, $year^{-1}$

L_o = methane generation potential, cubic meters per megagram solid waste

M_i = mass of the degradable solid waste in the ith section, megagram

t_i = age of the solid waste in the ith section, years

C_{NMOC} = concentration of nonmethane organic compounds, parts per million by volume

3.6×10^{-9} = conversion factor

(iii) The values for k and C_{NMOC} determined in field testing shall be used if field testing has been performed in determining the NMOC emission rate or the radii of influence (this distance from the well center to a point in the landfill where the pressure gradient applied by the blower or compressor approaches zero). If field testing has not been performed, the default values for k, L_O and C_{NMOC} provided in §60.754(a)(1) or the alternative values from §60.754(a)(5) shall be used. The mass of nondegradable solid waste contained within the given section may be subtracted from the total mass of the section when estimating emissions provided the nature, location, age, and amount of the nondegradable material is documented as provided in paragraph (a)(3)(i) of this section.

(b) Each owner or operator seeking to comply with §60.752(b)(2)(i)(A) shall construct the gas collection devices using the following equipment or procedures:

(1) The landfill gas extraction components shall be constructed of polyvinyl chloride (PVC), high density polyethylene (HDPE) pipe, fiberglass, stainless steel, or other nonporous corrosion resistant material of suitable dimensions to: convey projected amounts of gases; withstand installation, static, and settlement forces; and withstand planned overburden or traffic loads. The collection system shall extend as necessary to comply with emission and migration standards. Collection devices such as wells and horizontal collectors shall be perforated to allow gas entry without head loss sufficient to impair performance across the intended extent of control. Perforations shall be situated with regard to the need to prevent excessive air infiltration.

(2) Vertical wells shall be placed so as not to endanger underlying liners and shall address the occurrence of water within the landfill. Holes and trenches constructed for piped wells and horizontal collectors shall be of sufficient cross-section so as to allow for their proper construction and completion including, for example, centering of pipes and placement of gravel backfill. Collection devices shall be designed so as not to allow indirect short circuiting of air into the cover or refuse into the collection system or gas into the air. Any gravel used around pipe perforations should be of a dimension so as not to penetrate or block perforations.

(3) Collection devices may be connected to the collection header pipes below or above the landfill surface. The connector assembly shall include a positive closing throttle valve, any necessary seals and couplings, access couplings and at least one sampling port. The collection devices shall be constructed of PVC, HDPE, fiberglass, stainless steel, or other nonporous material of suitable thickness.

(c) Each owner or operator seeking to comply with §60.752(b)(2)(i)(A) shall convey the landfill gas to a control system in compliance with §60.752(b)(2)(iii) through the collection header pipe(s). The gas mover equipment shall be sized to handle the maximum gas generation flow rate expected over the intended use period of the gas moving equipment using the following procedures:

(1) For existing collection systems, the flow data shall be used to project the maximum flow rate. If no flow data exists, the procedures in paragraph (c)(2) of this section shall be used.

(2) For new collection systems, the maximum flow rate shall be in accordance with §60.755(a)(1).

[61 FR 9919, Mar. 12, 1996, as amended at 63 FR 32753, June 16, 1998; 64 FR 9262, Feb. 24, 1999; 65 FR 18909, Apr. 10, 2000]

APPENDIX A TO PART 60—TEST METHODS

Method 1—Sample and velocity traverses for stationary sources
Method 1A—Sample and velocity traverses for stationary sources with small stacks or ducts
Method 2—Determination of stack gas velocity and volumetric flow rate (Type S pitot tube)
Method 2A—Direct measurement of gas volume through pipes and small ducts
Method 2B—Determination of exhaust gas volume flow rate from gasoline vapor incinerators
Method 2C—Determination of stack gas velocity and volumetric flow rate in small stacks or ducts (standard pitot tube)
Method 2D—Measurement of gas volumetric flow rates in small pipes and ducts
Method 2E—Determination of landfill gas; gas production flow rate
Method 2F—Determination of Stack Gas Velocity and Volumetric Flow Rate With Three-Dimensional Probes
Method 2G—Determination of Stack Gas Velocity and Volumetric Flow Rate With Two-Dimensional Probes
Method 2H—Determination of Stack Gas Velocity Taking Into Account Velocity Decay Near the Stack Wall
Method 3—Gas analysis for the determination of dry molecular weight
Method 3A—Determination of Oxygen and Carbon Dioxide Concentrations in Emissions From Stationary Sources (Instrumental Analyzer Procedure)
Method 3B—Gas analysis for the determination of emission rate correction factor or excess air
Method 3C—Determination of carbon dioxide, methane, nitrogen, and oxygen from stationary sources
Method 4—Determination of moisture content in stack gases
Method 5—Determination of particulate emissions from stationary sources
Method 5A—Determination of particulate emissions from the asphalt processing and asphalt roofing industry
Method 5B—Determination of nonsulfuric acid particulate matter from stationary sources
Method 5C [Reserved]
Method 5D—Determination of particulate matter emissions from positive pressure fabric filters
Method 5E—Determination of particulate emissions from the wool fiberglass insulation manufacturing industry
Method 5F—Determination of nonsulfate particulate matter from stationary sources
Method 5G—Determination of particulate emissions from wood heaters from a dilution tunnel sampling location
Method 5H—Determination of particulate emissions from wood heaters from a stack location
Method 5I—Determination of Low Level Particulate Matter Emissions From Stationary Sources
Method 6—Determination of sulfur dioxide emissions from stationary sources
Method 6A—Determination of sulfur dioxide, moisture, and carbon dioxide emissions from fossil fuel combustion sources
Method 6B—Determination of sulfur dioxide and carbon dioxide daily average emissions from fossil fuel combustion sources
Method 6C—Determination of Sulfur Dioxide Emissions From Stationary Sources (Instrumental Analyzer Procedure)
Method 7—Determination of nitrogen oxide emissions from stationary sources
Method 7A—Determination of nitrogen oxide emissions from stationary sources—Ion chromatographic method
Method 7B—Determination of nitrogen oxide emissions from stationary sources (Ultraviolet spectrophotometry)
Method 7C—Determination of nitrogen oxide emissions from stationary sources—Alkaline-permanganate/colorimetric method
Method 7D—Determination of nitrogen oxide emissions from stationary sources—Alkaline-permanganate/ion chromatographic method
Method 7E—Determination of Nitrogen Oxides Emissions From Stationary Sources (Instrumental Analyzer Procedure)
Method 8—Determination of sulfuric acid mist and sulfur dioxide emissions from stationary sources
Method 9—Visual determination of the opacity of emissions from stationary sources
Alternate method 1—Determination of the opacity of emissions from stationary sources remotely by lidar
Method 10—Determination of carbon monoxide emissions from stationary sources
Method 10A—Determination of carbon monoxide emissions in certifying continuous emission monitoring systems at petroleum refineries
Method 10B—Determination of carbon monoxide emissions from stationary sources

Method 11—Determination of hydrogen sulfide content of fuel gas streams in petroleum refineries
Method 12—Determination of inorganic lead emissions from stationary sources
Method 13A—Determination of total fluoride emissions from stationary sources—SPADNS zirconium lake method
Method 13B—Determination of total fluoride emissions from stationary sources—Specific ion electrode method
Method 14—Determination of fluoride emissions from potroom roof monitors for primary aluminum plants
Method 14A— Determination of Total Fluoride Emissions from Selected Sources at Primary Aluminum Production Facilities
Method 15—Determination of hydrogen sulfide, carbonyl sulfide, and carbon disulfide emissions from stationary sources
Method 15A—Determination of total reduced sulfur emissions from sulfur recovery plants in petroleum refineries
Method 16—Semicontinuous determination of sulfur emissions from stationary sources
Method 16A—Determination of total reduced sulfur emissions from stationary sources (impinger technique)
Method 16B—Determination of total reduced sulfur emissions from stationary sources
Method 17—Determination of particulate emissions from stationary sources (in-stack filtration method)
Method 18—Measurement of gaseous organic compound emissions by gas chromatography
Method 19—Determination of sulfur dioxide removal efficiency and particulate, sulfur dioxide and nitrogen oxides emission rates
Method 20—Determination of nitrogen oxides, sulfur dioxide, and diluent emissions from stationary gas turbines
Method 21—Determination of volatile organic compound leaks
Method 22—Visual determination of fugitive emissions from material sources and smoke emissions from flares
Method 23—Determination of Polychlorinated Dibenzo-p-Dioxins and Polychlorinated Dibenzofurans From Stationary Sources
Method 24—Determination of volatile matter content, water content, density, volume solids, and weight solids of surface coatings
Method 24A—Determination of volatile matter content and density of printing inks and related coatings
Method 25—Determination of total gaseous nonmethane organic emissions as carbon
Method 25A—Determination of total gaseous organic concentration using a flame ionization analyzer
Method 25B—Determination of total gaseous organic concentration using a nondispersive infrared analyzer
Method 25C—Determination of nonmethane organic compounds (NMOC) in MSW landfill gases
Method 25D—Determination of the Volatile Organic Concentration of Waste Samples
Method 25E—Determination of Vapor Phase Organic Concentration in Waste Samples
Method 26—Determination of Hydrogen Chloride Emissions From Stationary Sources
Method 26A—Determination of hydrogen halide and halogen emissions from stationary sources—isokinetic method
Method 27—Determination of vapor tightness of gasoline delivery tank using pressure-vacuum test
Method 28—Certification and auditing of wood heaters
Method 28A—Measurement of air to fuel ratio and minimum achievable burn rates for wood-fired appliances
Method 29—Determination of metals emissions from stationary sources

The test methods in this appendix are referred to in §60.8 (Performance Tests) and §60.11 (Compliance With Standards and Maintenance Requirements) of 40 CFR part 60, subpart A (General Provisions). Specific uses of these test methods are described in the standards of performance contained in the subparts, beginning with Subpart D.

Within each standard of performance, a section title ''Test Methods and Procedures'' is provided to: (1) Identify the test methods to be used as reference methods to the facility subject to the respective standard and (2) identify any special instructions or conditions to be followed when applying a method to the respective facility. Such instructions (for example, establish sampling rates, volumes, or temperatures) are to be used either in addition to, or as a substitute for procedures in a test method. Similarly, for sources subject to emission monitoring requirements, specific instructions pertaining to any use of a test method as a reference method are provided in the subpart or in Appendix B.

Inclusion of methods in this appendix is not intended as an endorsement or denial of their applicability to sources that are not subject to standards of performance. The methods are potentially applicable to other sources; however, applicability should be confirmed by careful and appropriate evaluation of the conditions prevalent at such sources.

The approach followed in the formulation of the test methods involves specifications for equipment, procedures, and performance. In concept, a performance specification approach would be preferable in all methods because this allows the greatest flexibility to the user. In practice, however, this approach is impractical in most cases because

performance specifications cannot be established. Most of the methods described herein, therefore, involve specific equipment specifications and procedures, and only a few methods in this appendix rely on performance criteria.

Minor changes in the test methods should not necessarily affect the validity of the results and it is recognized that alternative and equivalent methods exist. Section 60.8 provides authority for the Administrator to specify or approve (1) equivalent methods, (2) alternative methods, and (3) minor changes in the methodology of the test methods. It should be clearly understood that unless otherwise identified all such methods and changes must have prior approval of the Administrator. An owner employing such methods or deviations from the test methods without obtaining prior approval does so at the risk of subsequent disapproval and retesting with approved methods.

Within the test methods, certain specific equipment or procedures are recognized as being acceptable or potentially acceptable and are specifically identified in the methods. The items identified as acceptable options may be used without approval but must be identified in the test report. The potentially approvable options are cited as ''subject to the approval of the Administrator'' or as ''or equivalent.'' Such potentially approvable techniques or alternatives may be used at the discretion of the owner without prior approval. However, detailed descriptions for applying these potentially approvable techniques or alternatives are not provided in the test methods. Also, the potentially approvable options are not necessarily acceptable in all applications. Therefore, an owner electing to use such potentially approvable techniques or alternatives is responsible for: (1) assuring that the techniques or alternatives are in fact applicable and are properly executed; (2) including a written description of the alternative method in the test report (the written method must be clear and must be capable of being performed without additional instruction, and the the degree of detail should be similar to the detail contained in the test methods); and (3) providing any rationale or supporting data necessary to show the validity of the alternative in the particular application. Failure to meet these requirements can result in the Administrator's disapproval of the alternative.

METHOD 1—SAMPLE AND VELOCITY TRAVERSES FOR STATIONARY SOURCES

1. *Principle and Applicability*

1.1 Principle. To aid in the representative measurement of pollutant emissions and/or total volumetric flow rate from a stationary source, a measurement site where the effluent stream is flowing in a known direction is selected, and the cross-section of the stack is divided into a number of equal areas. A traverse point is then located within each of these equal areas.

1.2 Applicability. This method is applicable to flowing gas streams in ducts, stacks, and flues. The method cannot be used when: (1) flow is cyclonic or swirling (see Section 2.4), (2) a stack is smaller than about 0.30 meter (12 in.) in diameter, or 0.071 m^2(113 $in.^2$) cross-sectional area, or (3) the measurement site is less than two stack or duct diameters downstream or less than a half diameter upstream from a flow disturbance.

The requirements of this method must be considered before construction of a new facility from which emissions will be measured; failure to do so may require subsequent alterations to the stack or deviation from the standard procedure. Cases involving variants are subject to approval by the Administrator, U.S. Environmental Protection Agency.

2. *Procedure*

2.1 Selection of Measurement Site. Sampling or velocity measurement is performed at a site located at least eight stack or duct diameters downstream and two diameters upstream from any flow disturbance such as a bend, expansion, or contraction in the stack, or from a visible flame. If necessary, an alternative location may be selected, at a position at least two stack or duct diameters downstream and a half diameter upstream from any flow disturbance. For a rectangular cross section, an equivalent diameter (D_e) shall be calculated from the following equation, to determine the upstream and downstream distances:

$$D_e = \frac{2LW}{(L+W)}$$

where L=length and W=width.

An alternative procedure is available for determining the acceptability of a measurement location not meeting the criteria above. This procedure, determination of gas flow angles at the sampling points and comparing the results with acceptability criteria, is described in Section 2.5.

2.2 Determining the Number of Traverse Points.

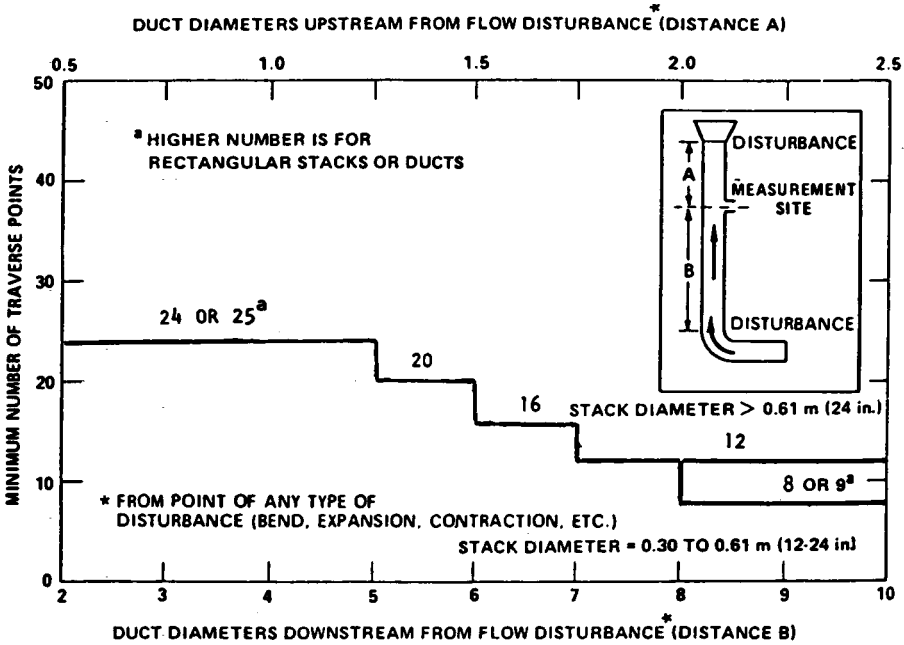

Figure 1-1. Minimum number of traverse points for particulate traverses.

2.2.1 Particulate Traverses. When the eight- and two-diameter criterion can be met, the minimum number of traverse points shall be: (1) twelve, for circular or rectangular stacks with diameters (or equivalent diameters) greater than 0.61 meter (24 in.); (2) eight, for circular stacks with diameters between 0.30 and 0.61 meter (12–24 in.); (3) nine, for rectangular stacks with equivalent diameters between 0.30 and 0.61 meter (12–24 in.).

When the eight- and two-diameter criterion cannot be met, the minimum number of traverse points is determined from Figure 1–1. Before referring to the figure, however, determine the distances from the chosen measurement site to the nearest upstream and downstream disturbances, and divide each distance by the stack diameter or equivalent diameter, to determine the distance in terms of the number of duct diameters. Then, determine from Figure 1–1 the minimum number of traverse points that corresponds: (1) to the number of duct diameters upstream; and (2) to the number of diameters downstream. Select the higher of the two minimum numbers of traverse points, or a greater value, so that for circular stacks the number is a multiple of 4, and for rectangular stacks, the number is one of those shown in Table 1–1.

TABLE 1–1. CROSS-SECTION LAYOUT FOR RECTANGULAR STACKS

Number of traverse points	Matrix layout
9	3x3
12	4x3
16	4x4
20	5x4
25	5x5
30	6x5
36	6x6
42	7x6
49	7x7

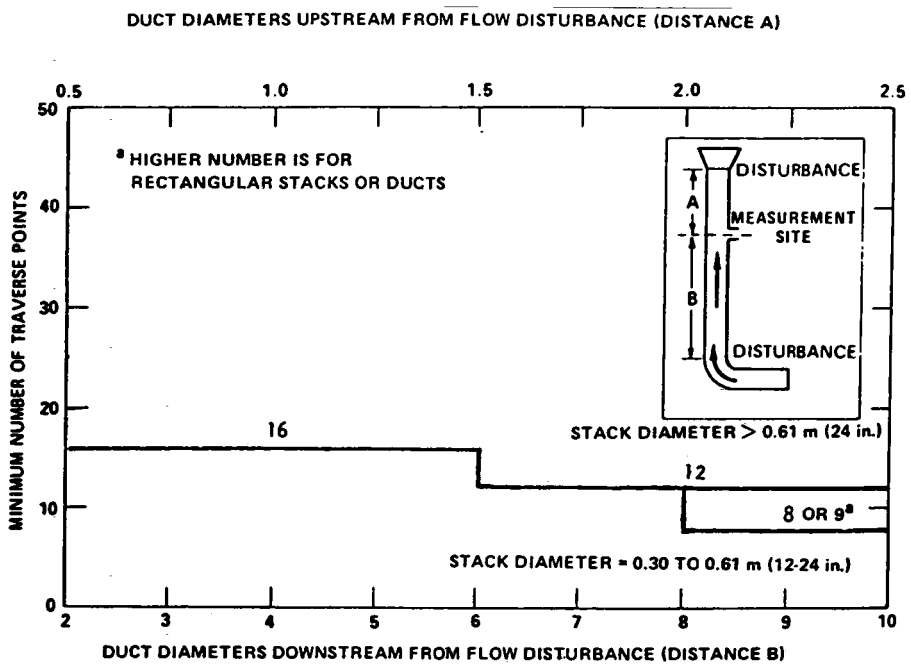

Figure 1-2. Minimum number of traverse points for velocity (nonparticulate) traverses.

2.2.2 Velocity (Non-Particulate) Traverses. When velocity or volumetric flow rate is to be determined (but not particulate matter), the same procedure as that for particulate traverses (Section 2.2.1) is followed, except that Figure 1–2 may be used instead of Figure 1–1.

2.3 Cross-sectional Layout and Location of Traverse Points.

2.3.1 Circular Stacks. Locate the traverse points on two perpendicular diameters according to Table 1–2 and the example shown in Figure 1–3. Any equation (for examples, see Citations 2 and 3 in the Bibliography) that gives the same values as those in Table 1–2 may be used in lieu of Table 1–2.

For particulate traverses, one of the diameters must be in a plane containing the greatest expected concentration variation, e.g., after bends, one diameter shall be in the plane of the bend. This requirement becomes less critical as the distance from the disturbance increases; therefore, other diameter locations may be used, subject to approval of the Administrator.

In addition for stacks having diameters greater than 0.61 m (24 in.) no traverse points shall be located within 2.5 centimeters (1.00 in.) of the stack walls; and for stack diameters equal to or less than 0.61 m (24 in.), no traverse points shall be located within 1.3 cm (0.50 in.) of the stack walls. To meet these criteria, observe the procedures given below.

2.3.1.1 Stacks With Diameters Greater Than 0.61 m (24 in.). When any of the traverse points as located in Section 2.3.1 fall within 2.5 cm (1.00 in.) of the stack walls, relocate them away from the stack walls to: (1) a distance of 2.5 cm (1.00 in.); or (2) a distance equal to the nozzle inside diameter, whichever is larger. These relocated traverse points (on each end of a diameter) shall be the ''adjusted'' traverse points.

Whenever two successive traverse points are combined to form a single adjusted traverse point, treat the adjusted point as two separate traverse points, both in the sampling (or velocity measurement) procedure, and in recording the data.

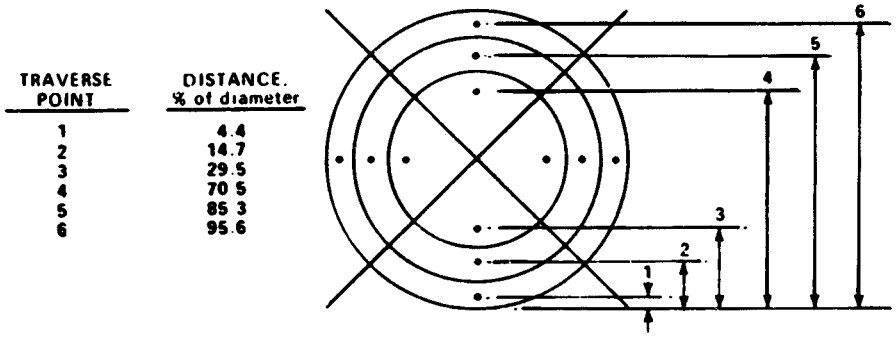

Figure 1-3. Example showing circular stack cross section divided into 12 equal areas, with location of traverse points indicated.

TABLE 1–2. LOCATION OF TRAVERSE POINTS IN CIRCULAR STACKS

[Percent of stack diameter from inside wall to traverse point]

Traverse point number on a diameter	Number of traverse points on a diameter—											
	2	4	6	8	10	12	14	16	18	20	22	24
1	14.6	6.7	4.4	3.2	2.6	2.1	1.8	1.6	1.4	1.3	1.1	1.1
2	85.4	25.0	14.6	10.5	8.2	6.7	5.7	4.9	4.4	3.9	3.5	3.2
3	.....	75.0	29.6	19.4	14.6	11.8	9.9	8.5	7.5	6.7	6.0	5.5
4	.....	93.3	70.4	32.3	22.6	17.7	14.6	12.5	10.9	9.7	8.7	7.9
5	.....	.....	85.4	67.7	34.2	25.0	20.1	16.9	14.6	12.9	11.6	10.5
6	.....	.....	95.6	80.6	65.8	35.6	26.9	22.0	18.8	16.5	14.6	13.2
7	.....	.....	.....	89.5	77.4	64.4	36.6	28.3	23.6	20.4	18.0	16.1
8	.....	.....	.....	96.8	85.4	75.0	63.4	37.5	29.6	25.0	21.8	19.4
9	.....	.....	.....	.....	91.8	82.3	73.1	62.5	38.2	30.6	26.2	23.0
10	.....	.....	.....	.....	97.4	88.2	79.9	71.7	61.8	38.8	31.5	27.2
11	.....	.....	.....	.....	.....	93.3	85.4	78.0	70.4	61.2	39.3	32.3
12	.....	.....	.....	.....	.....	97.9	90.1	83.1	76.4	69.4	60.7	39.8
13	.....	.....	.....	.....	.....	.....	94.3	87.5	81.2	75.0	68.5	60.2
14	.....	.....	.....	.....	.....	.....	98.2	91.5	85.4	79.6	73.8	67.7
15	.....	.....	.....	.....	.....	.....	.....	95.1	89.1	83.5	78.2	72.8
16	.....	.....	.....	.....	.....	.....	.....	98.4	92.5	87.1	82.0	77.0
17	.....	.....	.....	.....	.....	.....	.....	.....	95.6	90.3	85.4	80.6
18	.....	.....	.....	.....	.....	.....	.....	.....	98.6	93.3	88.4	83.9
19	.....	.....	.....	.....	.....	.....	.....	.....	.....	96.1	91.3	86.8
20	.....	.....	.....	.....	.....	.....	.....	.....	.....	98.7	94.0	89.5
21	.....	.....	.....	.....	.....	.....	.....	.....	.....	.....	96.5	92.1
22	.....	.....	.....	.....	.....	.....	.....	.....	.....	.....	98.9	94.5
23	.....	.....	.....	.....	.....	.....	.....	.....	.....	.....	.....	96.8
24	.....	.....	.....	.....	.....	.....	.....	.....	.....	.....	.....	98.9

2.3.1.2 Stacks With Diameters Equal to or Less Than 0.61 m (24 in.). Follow the procedure in Section 2.3.1.1, noting only that any ''adjusted'' points should be relocated away from the stack walls to: (1) a distance of 1.3 cm (0.50 in.); or (2) a distance equal to the nozzle inside diameter, whichever is larger.

2.3.2 Rectangular Stacks. Determine the number of traverse points as explained in Sections 2.1 and 2.2 of this method. From Table 1–1, determine the grid configuration. Divide the stack cross-section into as many equal rectangular elemental areas as traverse points, and then locate a traverse point at the centroid of each equal area according to the example in Figure 1–4.

If the tester desires to use more than the minimum number of traverse points, expand the ''minimum number of traverse points'' matrix (see Table 1–1) by adding the extra traverse points along one or the other or both legs of the matrix; the final matrix need not be balanced. For example, if a 4x3 ''minimum number of points'' matrix were expanded to 36 points, the final matrix could be 9x4 or 12x3, and would not necessarily have to be 6x6. After constructing the final matrix, divide the stack cross-section into as many equal rectangular, elemental areas as

traverse points, and locate a traverse point at the centroid of each equal area.

The situation of traverse points being too close to the stack walls is not expected to arise with rectangular stacks. If this problem should ever arise, the Administrator must be contacted for resolution of the matter.

2.4 Verification of Absence of Cyclonic Flow. In most stationary sources, the direction of stack gas flow is essentially parallel to the stack walls. However, cyclonic flow may exist (1) after such devices as cyclones and inertial demisters following venturi scrubbers, or (2) in stacks having tangential inlets or other duct configurations which tend to induce swirling; in these instances, the presence or absence of cyclonic flow at the sampling location must be determined. The following techniques are acceptable for this determination.

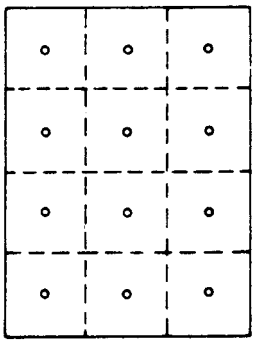

Level and zero the manometer. Connect a Type S pitot tube to the manometer. Position the Type S pitot tube at each traverse point, in succession, so that the planes of the face openings of the pitot tube are perpendicular to the stack cross-sectional plane; when the Type S pitot tube is in this position, it is at ''0° reference.'' Note the differential pressure (Δp) reading at each traverse point. If a null (zero) pitot reading is obtained at 0° reference at a given traverse point, an acceptable flow condition exists at that point. If the pitot reading is not zero at 0° reference, rotate the pitot tube (up to ±90° yaw angle), until a null reading is obtained. Carefully determine and record the value of the rotation angle (α) to the nearest degree. After the null technique has been applied at each traverse point, calculate the average of the absolute values of α; assign αvalues of 0° to those points for which no rotation was required, and include these in the overall average. If the average value of $\alpha$is greater than 20°, the overall flow condition in the stack is unacceptable and alternative methodology, subject to the approval of the Administrator, must be used to perform accurate sample and velocity traverses.

The alternative procedure described in Section 2.5 may be used to determine the rotation angles in lieu of the procedure described above.

2.5 Alternative Measurement Site Selection Procedure. This alternative applies to sources where measurement locations are less than 2 equivalent stack or duct diameters downstream or less than ½ duct diameter upstream from a flow disturbance. The alternative should be limited to ducts larger than 24 in. in diameter where blockage and wall effects are minimal. A directional flow-sensing probe is used to measure pitch and yaw angles of the gas flow at 40 or more traverse points; the resultant angle is calculated and compared with acceptable criteria for mean and standard deviation.

NOTE: Both the pitch and yaw angles are measured from a line passing through the traverse point and parallel to the stack axis. The pitch angle is the angle of the gas flow component in the plane that INCLUDES the traverse line and is parallel to the stack axis. The yaw angle is the angle of the gas flow component in the plane PERPENDICULAR to the traverse line at the traverse point and is measured from the line passing through the traverse point and parallel to the stack axis.

2.5.1 Apparatus.

2.5.1.1 Directional Probe. Any directional probe, such as United Sensor Type DA Three-Dimensional Directional Probe, capable of measuring both the pitch and yaw angles of gas flows is acceptable. (NOTE: Mention of trade name or specific products does not constitute endorsement by the U.S. Environmental Protection Agency.) Assign an identification number to the directional probe, and permanently mark or engrave the number on the body of the probe. The pressure holes of directional probes are susceptible to plugging when used in particulate-laden gas streams. Therefore, a system for cleaning the pressure holes by ''back-purging'' with pressurized air is required.

2.5.1.2 Differential Pressure Gauges. Inclined manometers, U-tube manometers, or other differential pressure gauges (e.g., magnehelic gauges) that meet the specifications described in Method 2, section 2.2.

NOTE: If the differential pressure gauge produces both negative and positive readings, then both negative and positive pressure readings shall be calibrated at a minimum of three points as specified in Method 2, section 2.2.

2.5.2 Traverse Points. Use a minimum of 40 traverse points for circular ducts and 42 points for rectangular ducts for the gas flow angle determinations. Follow section 2.3 and Table 1–1 or 1–2 for the location and layout of the traverse points. If the measurement location is determined to be acceptable according to the criteria in this alternative

procedure, use the same traverse point number and locations for sampling and velocity measurements.

2.5.3 Measurement Procedure.

2.5.3.1 Prepare the directional probe and differential pressure gauges as recommended by the manufacturer. Capillary tubing or surge tanks may be used to dampen pressure fluctuations. It is recommended, but not required, that a pretest leak check be conducted. To perform a leak check, pressurize or use suction on the impact opening until a reading of at least 7.6 cm (3 in.) H_2O registers on the differential pressure gauge, then plug the impact opening. The pressure of a leak-free system will remain stable for at least 15 seconds.

2.5.3.2 Level and zero the manometers. Since the manometer level and zero may drift because of vibrations and temperature changes, periodically check the level and zero during the traverse.

2.5.3.3 Position the probe at the appropriate locations in the gas stream, and rotate until zero deflection is indicated for the yaw angle pressure gauge. Determine and record the yaw angle. Record the pressure gauge readings for the pitch angle, and determine the pitch angle from the calibration curve. Repeat this procedure for each traverse point. Complete a ''back-purge'' of the pressure lines and the impact openings prior to measurements of each traverse point.

A post-test check as described in section 2.5.3.1 is required. If the criteria for a leak-free system are not met, repair the equipment, and repeat the flow angle measurements.

2.5.4 Calculate the resultant angle at each traverse point, the average resultant angle, and the standard deviation using the following equations. Complete the calculations retaining at least one extra significant figure beyond that of the acquired data. Round the values after the final calculations.

2.5.4.1 Calculate the resultant angle at each traverse point:

R_i=arc cosine [(cosine Y_i)(cosine P_i)]

Eq. 1–2

Where:

R_i=Resultant angle at traverse point i, degree.

Y_i=Yaw angle at traverse point i, degree.

P_i=Pitch angle at traverse point i, degree.

2.5.4.2 Calculate the average resultant for the measurements:

$$\overline{R} = \frac{\sum R_i}{n} \qquad \text{Eq. 1-3}$$

Where:

R=Average resultant angle, degree.

n=Total number of traverse points.

2.5.4.3 Calculate the standard deviations:

$$S_d = \sqrt{\frac{\sum_{i=1}^{n}(R_i - \overline{R})^2}{(n-1)}}$$

Eq. 1–4

Where:

S_d=Standard deviation, degree.

2.5.5 The measurement location is acceptable if R≤20° and S_d≤10°.

2.5.6 Calibration. Use a flow system as described in Sections 4.1.2.1 and 4.1.2.2 of Method 2. In addition, the flow system shall have the capacity to generate two test-section velocities: one between 365 and 730 m/min (1200 and 2400 ft/min) and one between 730 and 1100 m/min (2400 and 3600 ft/min).

2.5.6.1 Cut two entry ports in the test section. The axis through the entry ports shall be perpendicular to each other and intersect in the centroid of the test section. The ports should be elongated slots parallel to the axis of the test section and of sufficient length to allow measurement of pitch angles while maintaining the pitot head position at the test-section centroid. To facilitate alignment of the directional probe during calibration, the test section should be constructed of plexiglass or some other transparent material. All calibration measurements should be made at the same point in the test section, preferably at the centroid of the test section.

2.5.6.2 To ensure that the gas flow is parallel to the central axis of the test section, follow the procedure in Section 2.4 for cyclonic flow determination to measure the gas flow angles at the centroid of the test section from two test ports located 90°apart. The gas flow angle measured in each port must be ±2° of 0°. Straightening vanes should be installed, if necessary, to meet this criterion.

2.5.6.3 Pitch Angle Calibration. Perform a calibration traverse according to the manufacturer's recommended protocol in 5° increments for angles from −60° to =60° at one velocity in each of the two ranges specified above. Average the pressure ratio values obtained for each angle in the two flow ranges, and plot a calibration curve with the average values of the pressure ratio (or other suitable measurement factor as recommended by the manufacturer) versus the pitch angle. Draw a smooth line through the data points. Plot also the data values for each traverse point. Determine the differences between the measured data values and the angle from the calibration curve at the same pressure ratio. The difference at each comparison must be within 2° for angles between 0° and 40° and within 3°for angles between 40 ° and 60°.

2.5.6.4 Yaw Angle Calibration. Mark the three-dimensional probe to allow the determination of the yaw position of the probe. This is usually a line extending the length of the probe and aligned with the impact opening. To determine the accuracy of measurements of the yaw angle, only the zero or null position need be calilbrated as follows. Place the directional probe in the test section, and rotate the probe until the zero position is found. With a protractor or other angle measuring device, measure the angle indicated by the yaw angle indicator on the three-dimensional probe. This should be within 2°of 0°. Repeat this measurement for any other points along the length of the pitot where yaw angle measurements could be read in order to account for variations in the pitot markings used to indicate pitot head positions.

3. *Bibliography*

1. Determining Dust Concentration in a Gas Stream, ASME. Performance Test Code No. 27. New York, 1957.

2. Devorkin, Howard, et al. Air Pollution Source Testing Manual. Air Pollution Control District. Los Angeles, CA November 1963.

3. Methods for Determination of Velocity, Volume, Dust and Mist Content of Gases. Western Precipitation Division of Joy Manufacturing Co. Los Angeles, CA. Bulletin WP–50. 1968.

4. Standard Method for Sampling Stacks for Particulate Matter. In: 1971 Book of ASTM Standards, Part 23. ASTM Designation D–2928–71. Philadelphia, PA 1971.

5. Hanson, H.A., et al. Particulate Sampling Strategies for Large Power Plants Including Nonuniform Flow. USEPA, ORD, ESRL, Research Triangle Park, NC. EPA–600/2–76–170, June 1976.

6. Entropy Environmentalists, Inc. Determination of the Optimum Number of Sampling Points: An Analysis of Method 1 Criteria. Environmental Protection Agency, Research Triangle Park, NC. EPA Contract No. 68–01–3172, Task 7.

7. Hanson, H.A., R.J. Davini, J.K. Morgan, and A.A. Iversen. Particulate Sampling Strategies for Large Power Plants Including Nonuniform Flow. U.S. Environmental Protection Agency. Research Triangle Park, NC. Publication No. EPA–600/2–76–170. June 1976. 350 p.

8. Brooks, E.F., and R.L. Williams. Flow and Gas Sampling Manual. U.S. Environmental Protection Agency. Research Triangle Park, NC. Publication No. EPA–600/2–76–203. July 1976. 93 p.

9. Entropy Environmentalists, Inc. Traverse Point Study. EPA Contract No. 68–02–3172. June 1977. 19 p.

10. Brown, J. and K. Yu. Test Report: Particulate Sampling Strategy in Circular Ducts. Emission Measurement Branch, Emission Standards and Engineering Division. U.S. Environmental Protection Agency, Research Triangle Park, NC. 27711. July 31, 1980. 12 p.

11. Hawksley, P.G.W., S. Badzioch, and J.H. Blackett. Measurement of Solids in Flue Gases. Leatherhead, England, The British Coal Utilisation Research Association, 1961. p. 129–133.

12. Knapp, K.T. The Number of Sampling Points Needed for Representative Source Sampling. In: Proceedings of the Fourth National Conference on Energy and the Environment, Theodore, L., et al. (ed.). Dayton, Dayton Section of the American Institute of Chemical Engineers. October 3–7, 1976. p. 563–568.

13. Smith, W.S. and D.J. Grove. A Proposed Extension of EPA Method 1 Criteria. ''Pollution Engineering.'' *XV* (8):36-37. August 1983.

14. Gerhart, P.M. and M.J. Dorsey. Investigation of Field Test Procedures for Large Fans. University of Akron. Akron, OH. (EPRI Contract CS–1651). Final Report (RP–1649–5) December 1980.

15. Smith, W.S. and D.J. Grove. A New Look at Isokinetic Sampling—Theory and Applications. ''Source Evaluation Society Newsletter.'' *VIII* (3):19–24. August 1983.

METHOD 1A—SAMPLE AND VELOCITY TRAVERSES FOR STATIONARY SOURCES WITH SMALL STACKS OR DUCTS

1. Applicability and Principle

1.1 The applicability and principle of this method are identical to Method 1, except this method's applicability is limited to stacks or ducts less than about 0.30 meter (12 in.) in diameter or 0.071 m^2 (113 $in.^2$) in cross-sectional area, but equal to or greater than about 0.10 meter (4 in.) in diameter or 0.0081 m^2 (12.57 $in.^2$) in cross-sectional area.

1.2 In these small diameter stacks or ducts, the conventional Method 5 stack assembly (consisting of a Type S pitot tube attached to a sampling probe, equipped with a nozzle and thermocouple) blocks a significant portion of the cross section of the duct and causes inaccurate measurements. Therefore, for particulate matter (PM) sampling in small stacks or ducts, the gas velocity is measured using a standard pitot tube downstream of the actual emission sampling site. The straight run of duct between the PM sampling and velocity measurement sites allows the flow profile, temporarily disturbed by the presence of the sampling probe, to redevelop and stabilize.

1.3 The cross-sectional layout and location of traverse points and the verification of the absence of cyclonic flow are the same as in Method 1, Sections 2.3 and 2.4, respectively. Differences from Method 1, except as noted, are given below.

2. Procedure

2.1 Selection of Sampling and Measurement Sites.

2.1.1 PM Measurements. Select a PM sampling site located preferably at least 8 equivalent stack or duct diameters downstream and 10 equivalent diameters upstream from any flow disturbances such as bends, expansions, or contractions in the stack, or from a visible flame. Next, locate the velocity measurement site 8 equivalent diameters downstream of the PM sampling site. See Figure 1A–1. If such locations are not available, select an alternative PM sampling site that is at least 2 equivalent stack or duct diameters downstream and 2½ diameters upstream from any flow disturbance. Then, locate the velocity measurement site 2 equivalent diameters downstream from the PM sampling site. Follow Section 2.1 of Method 1 for calculating equivalent diameters for a rectangular cross section.

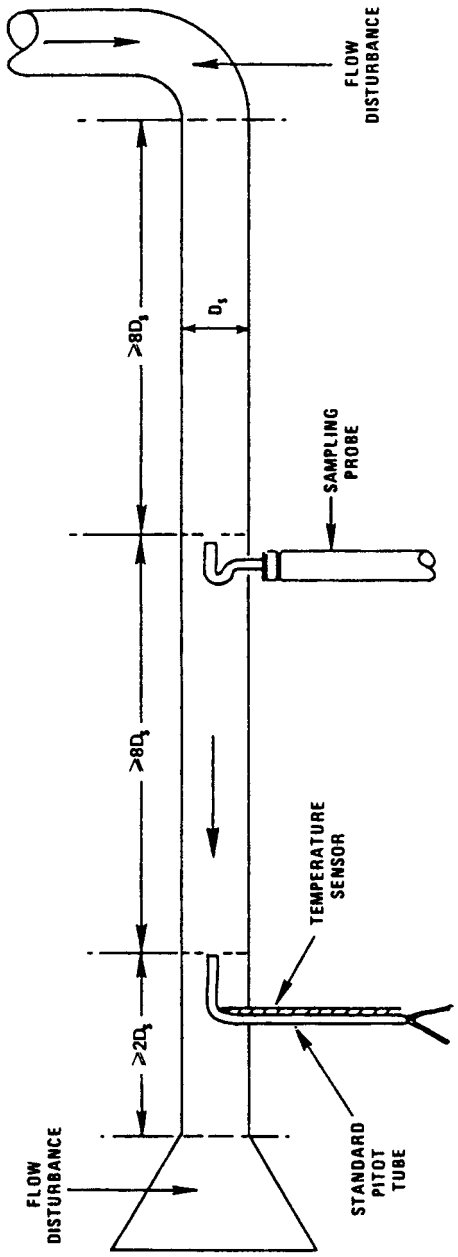

Figure 1A-1. Recommended sampling arrangement for small ducts.

2.1.2 PM Sampling (Steady Flow) or only Velocity Measurements. For PM sampling when the volumetric flow rate in a duct is constant with respect to time, Section 2.1 of Method 1 may be followed, with the PM sampling and velocity measurement performed at one location. To demonstrate that the flow rate is constant (within 10 percent)

when PM measurements are made, perform complete velocity traverses before and after the PM sampling run, and calculate the deviation of the flow rate derived after the PM sampling run from the one derived before the PM sampling run. The PM sampling run is acceptable if the deviation does not exceed 10 percent.

2.2 Determining the Number of Traverse Points.

2.2.1 PM Sampling. Use Figure 1–1 of Method 1 to determine the number of traverse points to use at both the velocity measurement and PM sampling locations. Before referring to the figure, however, determine the distances between both the velocity measurement and PM sampling sites to the nearest upstream and downstream disturbances. Then divide each distance by the stack diameter or equivalent diameter to express the distances in terms of the number of duct diameters. Next, determine the number of traverse points from Figure 1–1 of Method 1 corresponding to each of these four distances. Choose the highest of the four numbers of traverse points (or a greater number) so that, for circular ducts, the number is a multiple of four, and for rectangular ducts, the number is one of those shown in Table 1–1 of Method 1. When the optimum duct diameter location criteria can be satisfied, the minimum number of traverse points required is eight for circular ducts and nine for rectangular ducts.

2.2.2 PM Sampling (Steady Flow) or Velocity Measurements. Use Figure 1–2 of Method 1 to determine the number of traverse points, following the same procedure used for PM sampling traverses as described in Section 2.2.1 of Method 1. When the optimum duct diameter location criteria can be satisfied, the minimum number of traverse points required is eight for circular ducts and nine for rectangular ducts.

3. Bibliography

1. Same as in Method 1, Section 3, Citations 1 through 6.

2. Vollaro, Robert F. Recommended Procedure for Sample Traverses in Ducts Smaller Than 12 Inches in Diameter. U.S. Environmental Protection Agency, Emission Measurement Branch, Research Triangle Park, NC. January 1977.

METHOD 2—DETERMINATION OF STACK GAS VELOCITY AND VOLUMETRIC FLOW RATE (TYPE S PITOT TUBE)

1. *Principle and Applicability*

1.1 Principle. The average gas velocity in a stack is determined from the gas density and from measurement of the average velocity head with a Type S (Stausscheibe or reverse type) pitot tube.

1.2 Applicability. This method is applicable for measurement of the average velocity of a gas stream and for quantifying gas flow.

This procedure is not applicable at measurement sites which fail to meet the criteria of Method 1, Section 2.1. Also, the method cannot be used for direct measurement in cyclonic or swirling gas streams; Section 2.4 of Method 1 shows how to determine cyclonic or swirling flow conditions. When unacceptable conditions exist, alternative procedures, subject to the approval of the Administrator, U.S. Environmental Protection Agency, must be employed to make accurate flow rate determinations; examples of such alternative procedures are: (1) to install straightening vanes; (2) to calculate the total volumetric flow rate stoichiometrically, or (3) to move to another measurement site at which the flow is acceptable.

2. *Apparatus*

Specifications for the apparatus are given below. Any other apparatus that has been demonstrated (subject to approval of the Administrator) to be capable of meeting the specifications will be considered acceptable.

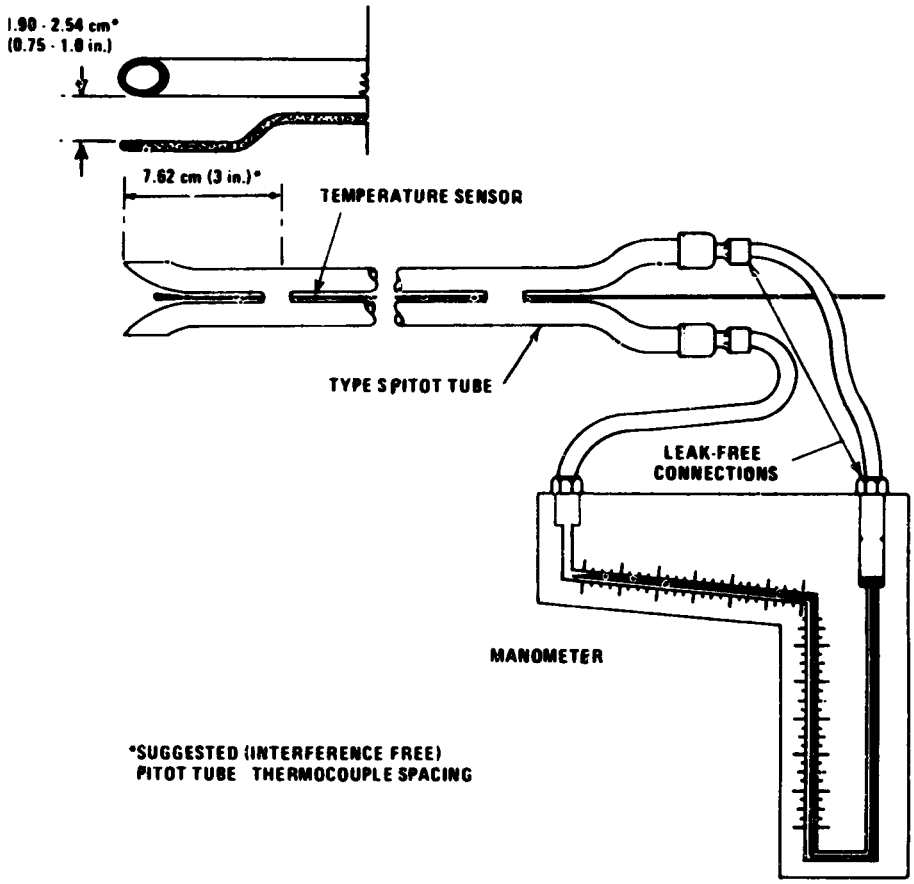

Figure 2-1. Type S pitot tube manometer assembly.

2.1 Type S Pitot Tube. The Type S pitot tube (Figure 2–1) shall be made of metal tubing (e.g., stainless steel). It is recommended that the external tubing diameter (dimension D_t Figure 2–2b) be between 0.48 and 0.95 centimeter (3/16 and 3/8 inch). There shall be an equal distance from the base of each leg of the pitot tube to its face-opening plane (dimensions P_A and P_B Figure 2–2b); it is recommended that this distance be between 1.05 and 1.50 times the external tubing diameter. The face openings of the pitot tube shall, preferably, be aligned as shown in Figure 2–2; however, slight misalignments of the openings are permissible (see Figure 2–3).

The Type S pitot tube shall have a known coefficient, determined as outlined in Section 4. An identification number shall be assigned to the pitot tube; this number shall be permanently marked or engraved on the body of the tube.

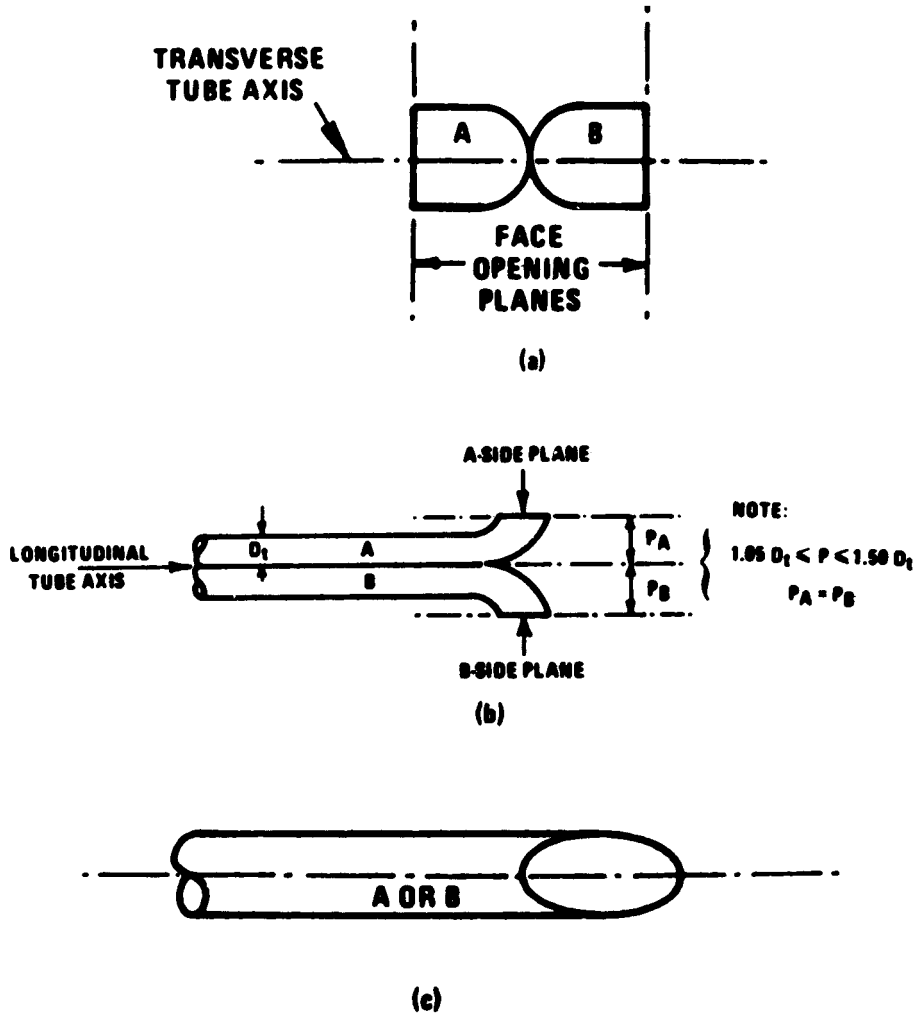

Figure 2-2. Properly constructed Type S pitot tube, shown in: (a) end view; face opening planes perpendicular to transverse axis; (b) top view; face opening planes parallel to longitudinal axis; (c) side view; both legs of equal length and centerlines coincident, when viewed from both sides. Baseline coefficient values of 0.84 may be assigned to pitot tubes constructed this way.

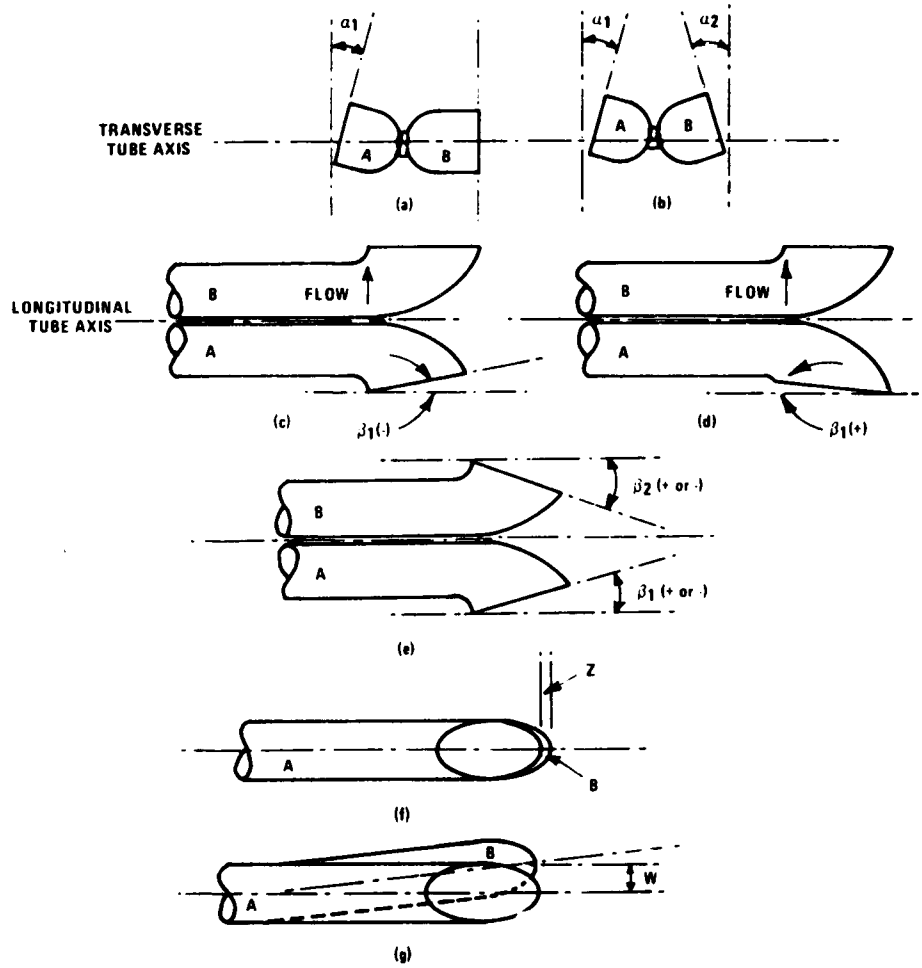

Figure 2-3. Types of face-opening misalignment that can result from field use or improper construction of Type S pitot tubes. These will not affect the baseline value of Cp(s) so long as $\alpha 1$ and $\alpha 2 \leq 10°$, $\beta 1$ and $\beta 2 \leq 5°$, $z \leq 0.32$ cm (1/8 in.) and $w \leq 0.08$ cm (1/32 in.) (citation 11 in Bibliography).

A standard pitot tube may be used instead of a Type S, provided that it meets the specifications of Sections 2.7 and 4.2; note, however, that the static and impact pressure holes of standard pitot tubes are susceptible to plugging in particulate-laden gas streams. Therefore, whenever a standard pitot tube is used to perform a traverse, adequate proof must be furnished that the openings of the pitot tube have not plugged up during the traverse period; this can be done by taking a velocity head (Δp) reading at the final traverse point, cleaning out the impact and static holes of the standard pitot tube by ''back-purging'' with pressurized air, and then taking another Δp reading. If the Δp readings made before and after the air purge are the same (±5 percent), the traverse is acceptable. Otherwise, reject the run. Note that if Δp at the final traverse point is unsuitably low, another point may be selected. If ''back-purging'' at regular intervals is part of the procedure, then comparative Δp readings shall be taken, as above, for the last two back purges at which suitably high Δp readings are observed.

2.2 Differential Pressure Gauge. An inclined manometer or equivalent device is used. Most sampling trains are equipped with a 10-in. (water column) inclined-vertical manometer, having 0.01-in. H_2O divisions on the 0-to 1-in. inclined scale, and 0.1-in. H_2O divisions on the 1- to 10-in. vertical scale. This type of manometer (or other gauge of equivalent sensitivity) is satisfactory for the measurement of Δp values as low as 1.3 mm (0.05 in.) H_2O. However, a differential pressure gauge of greater sensitivity shall be used (subject to the approval of the Administrator), if any of the following is found to be true: (1) the arithmetic average of all Δp readings at the traverse points in the stack is less than 1.3 mm (0.05 in.) H_2O; (2) for traverses of 12 or more points, more than 10 percent of the individual Δp readings are below 1.3 mm (0.05 in.) H_2O; (3) for traverses of fewer than 12 points, more than one Δp reading is below 1.3 mm (0.05 in.) H_2O. Citation 18 in Bibliography describes commercially available instrumentation for the measurement of low-range gas velocities.

As an alternative to criteria (1) through (3) above, the following calculation may be performed to determine the necessity of using a more sensitive differential pressure gauge:

$$T = \frac{\sum_{i=1}^{n} \sqrt{\Delta p_i + K}}{\sum_{i=1}^{n} \sqrt{\Delta p_i}}$$

Where:

Δp_i=Individual velocity head reading at a traverse point, mm H_2O (in. H_2O).

n=Total number of traverse points.

K=0.13 mm H_2O when metric units are used and 0.005 in. H_2O when English units are used.

If T is greater than 1.05, the velocity head data are unacceptable and a more sensitive differential pressure gauge must be used.

NOTE: If differential pressure gauges other than inclined manometers are used (e.g., magnehelic gauges), their calibration must be checked after each test series. To check the calibration of a differential pressure gauge, compare Δp readings of the gauge with those of a gauge-oil manometer at a minimum of three points, approximately representing the range of Δp values in the stack. If, at each point, the values of Δp as read by the differential pressure gauge and gauge-oil manometer agree to within 5 percent, the differential pressure gauge shall be considered to be in proper calibration. Otherwise, the test series shall either be voided, or procedures to adjust the measured Δp values and final results shall be used subject to the approval of the Administrator.

2.3 Temperature Gauge. A thermocouple, liquid-filled bulb thermometer, bimetallic thermometer, mercury-in-glass thermometer, or other gauge, capable of measuring temperature to within 1.5 percent of the minimum absolute stack temperature shall be used. The temperature gauge shall be attached to the pitot tube such that the sensor tip does not touch any metal; the gauge shall be in an interference-free arrangement with respect to the pitot tube face openings (see Figure 2–1 and also Figure 2–7 in Section 4). Alternative positions may be used if the pitot tube-temperature gauge system is calibrated according to the procedure of Section 4. Provided that a difference of not more than 1 percent in the average velocity measurement is introduced, the temperature gauge need not be attached to the pitot tube; this alternative is subject to the approval of the Administrator.

2.4 Pressure Probe and Gauge. A piezometer tube and mercury- or water-filled U-tube manometer capable of measuring stack pressure to within 2.5 mm (0.1 in.) Hg is used. The static tap of a standard type pitot tube or one leg of a Type S pitot tube with the face opening planes positioned parallel to the gas flow may also be used as the pressure probe.

2.5 Barometer. A mercury, aneroid, or other barometer capable of measuring atmospheric pressure to within 2.5 mm Hg (0.1 in. Hg) may be used. In many cases, the barometric reading may be obtained from a nearby National Weather Service station, in which case the station value (which is the absolute barometric pressure) shall be requested and an adjustment for elevation differences between the weather station and the sampling point shall be applied at a rate of minus 2.5 mm (0.1 in.) Hg per 30-meter (100 foot) elevation increase or vice-versa for elevation decrease.

2.6 Gas Density Determination Equipment. Method 3 equipment, if needed (see Section 3.6), to determine the stack gas dry molecular weight, and Reference Method 4 or Method 5 equipment for moisture content determination; other methods may be used subject to approval of the Administrator.

2.7 Calibration Pitot Tube. When calibration of the Type S pitot tube is necessary (see Section 4), a standard pitot tube is used as a reference. The standard pitot tube shall, preferably, have a known coefficient, obtained either (1) directly from the National Bureau of Standards, Route 270, Quince Orchard Road, Gaithersburg, Maryland, or (2) by calibration against another standard pitot tube with an NBS-traceable coefficient. Alternatively, a standard pitot tube designed according to the criteria given in 2.7.1 through 2.7.5 below and illustrated in Figure 2–4 (see also Citations 7, 8, and 17 in Bibliography) may be used. Pitot tubes designed according to these specifications will have baseline coefficients of about 0.99±0.01.

2.7.1 Hemispherical (shown in Figure 2–4), ellipsoidal, or conical tip.

2.7.2 A minimum of six diameters straight run (based upon *D*, the external diameter of the tube) between the tip and the static pressure holes.

2.7.3 A minimum of eight diameters straight run between the static pressure holes and the centerline of the external tube, following the 90 degree bend.

2.7.4 Static pressure holes of equal size (approximately 0.1 *D*), equally spaced in a piezometer ring configuration.

2.7.5 Ninety degree bend, with curved or mitered junction.

2.8 Differential Pressure Gauge for Type S Pitot Tube Calibration. An inclined manometer or equivalent is used. If the single-velocity calibration technique is employed (see Section 4.1.2.3), the calibration differential pressure gauge shall be readable to the nearest 0.13 mm H_2O (0.005 in. H_2O). For multivelocity calibrations, the gauge shall be readable to the nearest 0.13 mm H_2O (0.005 in. H_2O) for Δp values between 1.3 and 25 mm H_2O (0.05 and 1.0 in. H_2O), and to the nearest 1.3 mm H_2O (0.05 in. H_2O) for Δp values above 25 mm H_2O (1.0 in. H_2O). A special, more sensitive gauge will be required to read Δp values below 1.3 mm H_2O [0.05 in. H_2O] (see Citation 18 in Bibliography).

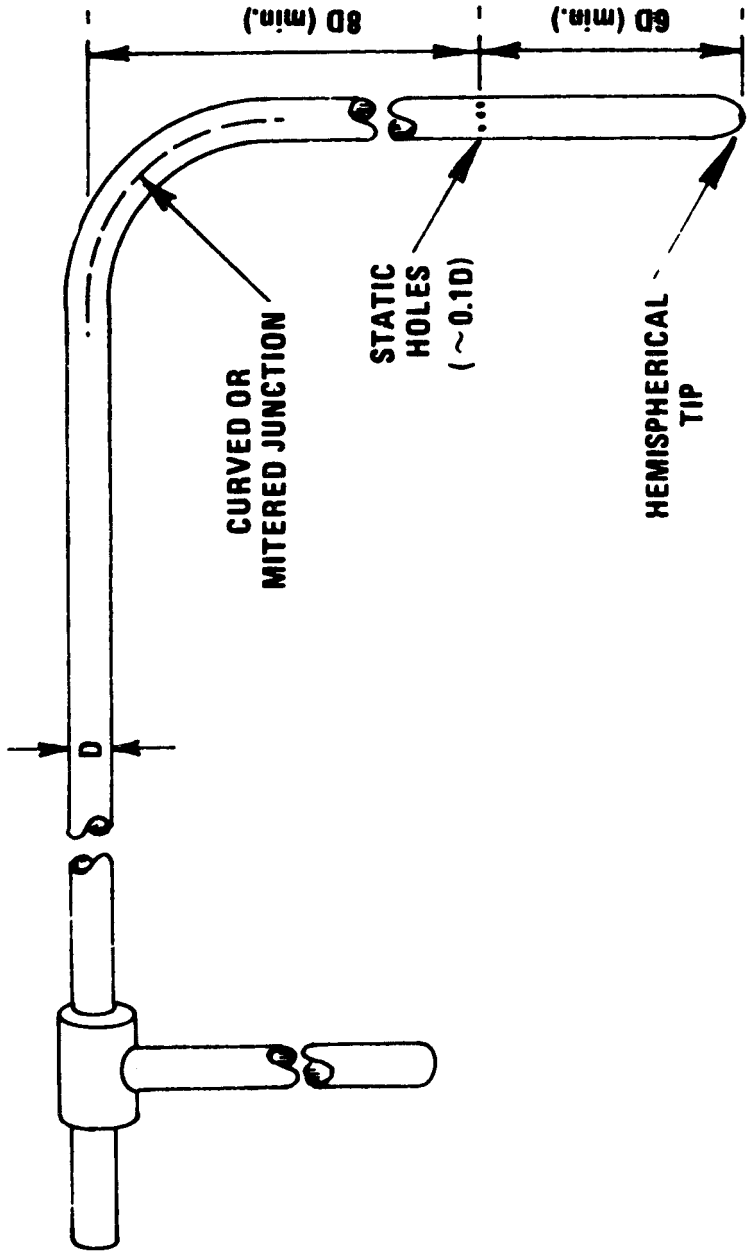

Figure 2-4. Standard pitot tube design specifications.

3. *Procedure*

3.1 Set up the apparatus as shown in Figure 2–1. Capillary tubing or surge tanks installed between the manometer and pitot tube may be used to dampen Δp fluctuations. It is recommended, but not required, that a pretest leak-check be conducted, as follows: (1) blow through the pitot impact opening

until at least 7.6 cm (3 in.) H_2O velocity pressure registers on the manometer; then, close off the impact opening. The pressure shall remain stable for at least 15 seconds; (2) do the same for the static pressure side, except using suction to obtain the minimum of 7.6 cm (3 in.) H_2O. Other leak-check procedures, subject to the approval of the Administrator, may be used.

3.2 Level and zero the manometer. Because the manometer level and zero may drift due to vibrations and temperature changes, make periodic checks during the traverse. Record all necessary data as shown in the example data sheet (Figure 2–5).

3.3 Measure the velocity head and temperature at the traverse points specified by Method 1. Ensure that the proper differential pressure gauge is being used for the range of Δp values encountered (see Section 2.2). If it is necessary to change to a more sensitive gauge, do so, and remeasure the Δp and temperature readings at each traverse point. Conduct a post-test leak-check (mandatory), as described in Section 3.1 above, to validate the traverse run.

3.4 Measure the static pressure in the stack. One reading is usually adequate.

3.5 Determine the atmospheric pressure.

PLANT _____

DATE _____ RUN NO. _____

STACK DIAMETER OR DIMENSIONS, m(in.) _____

BAROMETRIC PRESSURE, mm Hg (in. Hg) _____

CROSS SECTIONAL AREA, $m^2(ft^2)$ _____

OPERATORS _____

PITOT TUBE I.D. NO. _____

AVG. COEFFICIENT, C_p = _____

LAST DATE CALIBRATED _____

SCHEMATIC OF STACK CROSS SECTION

Traverse Pt. No.	Vel. Hd., Δp mm (in.) H_2O	Stack Temperature		P_g mm Hg (in.Hg)	$\sqrt{\Delta p}$
		t_s, °C (°F)	T_s, °K (°R)		
		Average			

Figure 2-5. Velocity traverse data.

3.6 Determine the stack gas dry molecular weight. For combustion processes or processes that emit essentially CO_2, O_2, CO, and N_2, use Method 3. For processes emitting essentially air, an analysis need not be conducted; use a dry molecular weight of 29.0. For other processes, other methods, subject

to the approval of the Administrator, must be used.

3.7 Obtain the moisture content from Reference Method 4 (or equivalent) or from Method 5.

3.8 Determine the cross-sectional area of the stack or duct at the sampling location. Whenever possible, physically measure the stack dimensions rather than using blueprints.

4. *Calibration*

4.1 Type S Pitot Tube. Before its initial use, carefully examine the Type S pitot tube in top, side, and end views to verify that the face openings of the tube are aligned within the specifications illustrated in Figure 2–2 or 2–3. The pitot tube shall not be used if it fails to meet these alignment specifications.

After verifying the face opening alignment, measure and record the following dimensions of the pitot tube: (a) the external tubing diameter (dimension D_t, Figure 2–2b); and (b) the base-to-opening plane distances (dimensions P_A and P_B, Figure 2–2b). If D_t is between 0.48 and 0.95 cm (3/16 and 3/8 in.) and if P_A and P_B are equal and between 1.05 and 1.50 D_t, there are two possible options: (1) the pitot tube may be calibrated according to the procedure outlined in Sections 4.1.2 through 4.1.5 below, or (2) a baseline (isolated tube) coefficient value of 0.84 may be assigned to the pitot tube. Note, however, that if the pitot tube is part of an assembly, calibration may still be required, despite knowledge of the baseline coefficient value (see Section 4.1.1).

If D_t, P_A, and P_B are outside the specified limits, the pitot tube must be calibrated as outlined in 4.1.2 through 4.1.5 below.

4.1.1 Type S Pitot Tube Assemblies. During sample and velocity traverses, the isolated Type S pitot tube is not always used; in many instances, the pitot tube is used in combination with other source-sampling components (thermocouple, sampling probe, nozzle) as part of an ''assembly.'' The presence of other sampling components can sometimes affect the baseline value of the Type S pitot tube coefficient (Citation 9 in Bibliography); therefore an assigned (or otherwise known) baseline coefficient value may or may not be valid for a given assembly. The baseline and assembly coefficient values will be identical only when the relative placement of the components in the assembly is such that aerodynamic interference effects are eliminated. Figures 2–6 through 2–8 illustrate interference-free component arrangements for Type S pitot tubes having external tubing diameters between 0.48 and 0.95 cm (3/16 and 3/8 in.). Type S pitot tube assemblies that fail to meet any or all of the specifications of Figures 2–6 through 2–8 shall be calibrated according to the procedure outlined in Sections 4.1.2 through 4.1.5 below, and prior to calibration, the values of the intercomponent spacings (pitot-nozzle, pitot-thermocouple, pitot-probe sheath) shall be measured and recorded.

NOTE: Do not use any Type S pitot tube assembly which is constructed such that the impact pressure opening plane of the pitot tube is below the entry plane of the nozzle (see Figure 2–6b).

4.1.2 Calibration Setup. If the Type S pitot tube is to be calibrated, one leg of the tube shall be permanently marked A, and the other, B. Calibration shall be done in a flow system having the following essential design features:

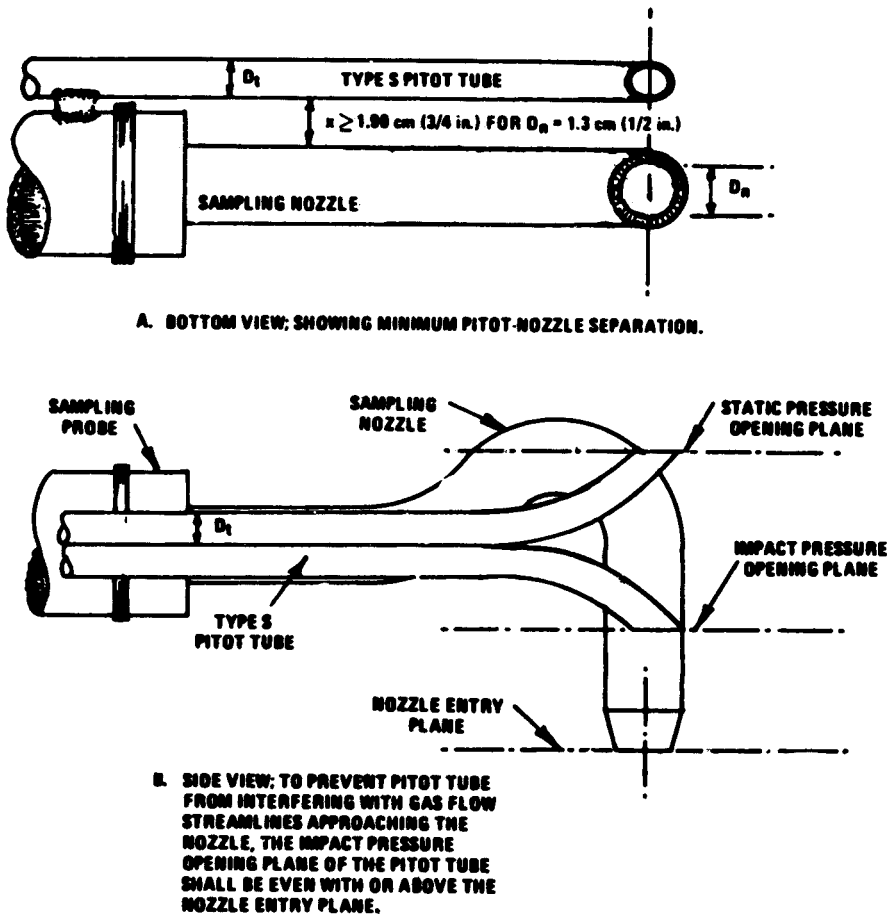

Figure 2-6. Proper pitot tube-sampling nozzle configuration to prevent aerodynamic interference; buttonhook-type nozzle; centers of nozzle and pitot opening aligned; D_t between 0.48 and 0.95 cm (3/16 and 3/8 in.).

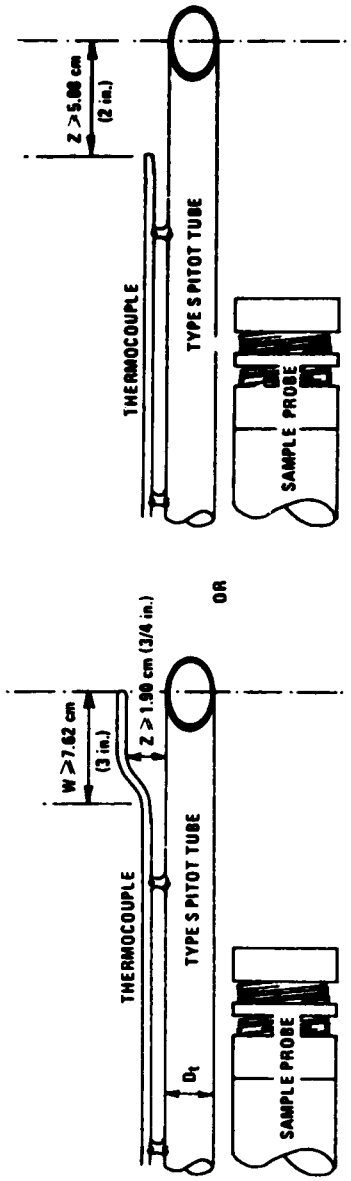

Figure 2-7. Proper thermocouple placement to prevent interference; D_t between 0.48 and 0.95 cm (3/16 and 3/8 in.).

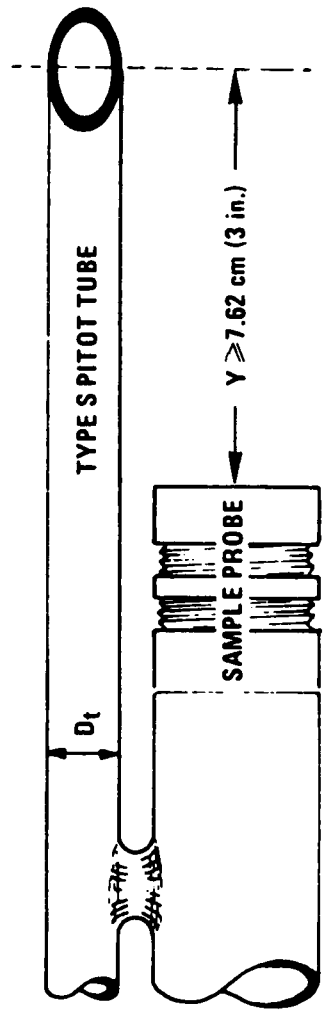

Figure 2-8. Minimum pitot-sample probe separation needed to prevent interference; D_t between 0.48 and 0.95 cm (3/16 and 3/8 in.).

4.1.2.1 The flowing gas stream must be confined to a duct of definite cross-sectional area, either circular or rectangular. For circular cross-sections, the minimum duct diameter shall be 30.5 cm (12 in.); for rectangular cross-sections, the width (shorter side) shall be at least 25.4 cm (10 in.).

4.1.2.2 The cross-sectional area of the calibration duct must be constant over a distance of 10 or more duct diameters. For a rectangular cross-section, use an equivalent diameter, calculated from the following equation, to determine the number of duct diameters:

$$D_e = \frac{2LW}{(L+W)} \qquad \text{Eq. 2-1}$$

Where:
D_e=Equivalent diameter
L=Length
W=Width

To ensure the presence of stable, fully developed flow patterns at the calibration site, or ''test section,'' the site must be located at least eight diameters downstream and two diameters upstream from the nearest disturbances.

NOTE: The eight- and two-diameter criteria are not absolute; other test section locations may be used (subject to approval of the Administrator), provided that the flow at the test site is stable and demonstrably parallel to the duct axis.

4.1.2.3 The flow system shall have the capacity to generate a test-section velocity around 915 m/min (3,000 ft/min). This velocity must be constant with time to guarantee steady flow during calibration. Note that Type S pitot tube coefficients obtained by single-velocity calibration at 915 m/min (3,000 ft/min) will generally be valid to within ±3 percent for the measurement of velocities above 305 m/min (1,000 ft/min) and to within ±5 to 6 percent for the measurement of velocities between 180 and 305 m/min (600 and 1,000 ft/min). If a more precise correlation between C_p and velocity is desired, the flow system shall have the capacity to generate at least four distinct, time-invariant test-section velocities covering the velocity range from 180 to 1,525 m/min (600 to 5,000 ft/min), and calibration data shall be taken at regular velocity intervals over this range (see Citations 9 and 14 in Bibliography for details).

4.1.2.4 Two entry ports, one each for the standard and Type S pitot tubes, shall be cut in the test section; the standard pitot entry port shall be located slightly downstream of the Type S port, so that the standard and Type S impact openings will lie in the same cross-sectional plane during calibration. To facilitate alignment of the pitot tubes during calibration, it is advisable that the test section be constructed of plexiglas or some other transparent material.

4.1.3 Calibration Procedure. Note that this procedure is a general one and must not be used without first referring to the special considerations presented in Section 4.1.5. Note also that this procedure applies only to single-velocity calibration. To obtain calibration data for the A and B sides of the Type S pitot tube, proceed as follows:

4.1.3.1 Make sure that the manometer is properly filled and that the oil is free from contamination and is of the proper density. Inspect and leak-check all pitot lines; repair or replace if necessary.

4.1.3.2 Level and zero the manometer. Turn on the fan and allow the flow to stabilize. Seal the Type S entry port.

4.1.3.3 Ensure that the manometer is level and zeroed. Position the standard pitot tube at the calibration point (determined as outlined in Section 4.1.5.1), and align the tube so that its tip is pointed directly into the flow. Particular care should be taken in aligning the tube to avoid yaw and pitch angles. Make sure that the entry port surrounding the tube is properly sealed.

4.1.3.4 Read Δp_{std} and record its value in a data table similar to the one shown in Figure 2–9. Remove the standard pitot tube from the duct and disconnect it from the manometer. Seal the standard entry port.

4.1.3.5 Connect the Type S pitot tube to the manometer. Open the Type S entry port. Check the manometer level and zero. Insert and align the Type S pitot tube so that its A side impact opening is at the same point as was the standard pitot tube and is pointed directly into the flow. Make sure that the entry port surrounding the tube is properly sealed.

4.1.3.6 Read Δp_B and enter its value in the data table. Remove the Type S pitot tube from the duct and disconnect it from the manometer.

4.1.3.7 Repeat steps 4.1.3.3 through 4.1.3.6 above until three pairs of Δp readings have been obtained.

4.1.3.8 Repeat steps 4.1.3.3 through 4.1.3.7 above for the B side of the Type S pitot tube.

4.1.3.9 Perform calculations, as described in Section 4.1.4 below.

4.1.4 Calculations.

4.1.4.1 For each of the six pairs of Δp readings (i.e., three from side A and three from side B) obtained in Section 4.1.3 above, calculate the value of the Type S pitot tube coefficient as follows:

PITOT TUBE IDENTIFICATION NUMBER: _____ DATE: _____

CALIBRATED BY: _____

	"A" SIDE CALIBRATION			
RUN NO.	Δp_{std} cm H_2O (in. H_2O)	$\Delta p_{(s)}$ cm H_2O (in. H_2O)	$C_{p(s)}$	DEVIATION $C_{p(s)} - \bar{C}_p(A)$
1				
2				
3				
		$\bar{C}_p$ (SIDE A)		

	"B" SIDE CALIBRATION			
RUN NO.	Δp_{std} cm H_2O (in. H_2O)	$\Delta p_{(s)}$ cm H_2O (in. H_2O)	$C_{p(s)}$	DEVIATION $C_{p(s)} - \bar{C}_p(B)$
1				
2				
3				
		$\bar{C}_p$ (SIDE B)		

$$\text{AVERAGE DEVIATION} = \sigma\,(\text{A OR B}) = \frac{\sum_{1}^{3} \left| C_{p(s)} - \bar{C}_p(\text{A OR B}) \right|}{3} \leftarrow \text{MUST BE} \leq 0.01$$

$$\left| \bar{C}_p\,(\text{SIDE A}) - \bar{C}_p\,(\text{SIDE B}) \right| \leftarrow \text{MUST BE} \leq 0.01$$

Figure 2-9. Pitot tube calibration data.

$$C_{p(s)} = C_{p(std)} \sqrt{\frac{\Delta p_{std}}{\Delta p_s}}$$

Equation 2–2

Where:

$C_{p(s)}$=Type S pitot tube coefficient

$C_{p(std)}$=Standard pitot tube coefficient; use 0.99 if the coefficient is unknown and the tube is designed according to the criteria of Sections 2.7.1 to 2.7.5 of this method.

Δp_{std}=Velocity head measured by the standard pitot tube, cm H_2O (in. H_2O)

Δp_s=Velocity head measured by the Type S pitot tube, cm H_2O (in. H_2O)

4.1.4.2 Calculate $C_{\bar{p}}$ (side A), the mean A-side coefficient, and C_p (side B), the mean B-side coefficient: calculate the difference between these two average values.

4.1.4.3 Calculate the deviation of each of the three A-side values of $C_{p(s)}$ from C_p (side A), and the deviation of each B-side value of $C_{p(s)}$ from C_p (side B). Use the following equation:

$$\text{Deviation} = C_{p(s)} - \bar{C}_p(\text{A or B})$$

Equation 2–3

4.1.4.4 Calculate σ, the average deviation from the mean, for both the A and B sides of the pitot tube. Use the following equation:

$$\sigma\,(\text{side A or B}) = \frac{\sum_{1}^{3} |C_{p(s)} - \bar{C}_p(A \text{ or } B)|}{3}$$

Equation 2–4

4.1.4.5 Use the Type S pitot tube only if the values of σ (side A) and σ (side B) are less than or equal to 0.01 and if the absolute value of the difference between C_p (A) and C_p (B) is 0.01 or less.

4.1.5 Special considerations.

4.1.5.1 Selection of calibration point.

4.1.5.1.1 When an isolated Type S pitot tube is calibrated, select a calibration point at or near the center of the duct, and follow the procedures outlined in Sections 4.1.3 and 4.1.4 above. The Type S pitot coefficients so obtained, i.e., C_p (side A) and C_p (side B), will be valid, so long as either: (1) the isolated pitot tube is used; or (2) the pitot tube is used with other components (nozzle, thermocouple, sample probe) in an arrangement that is free from aerodynamic interference effects (see Figures 2–6 through 2–8).

4.1.5.1.2 For Type S pitot tube-thermocouple combinations (without sample probe), select a calibration point at or near the center of the duct, and follow the procedures outlined in Sections 4.1.3 and 4.1.4 above. The coefficients so obtained will be valid so long as the pitot tube-thermocouple combination is used by itself or with other components in an interference-free arrangement (Figures 2–6 and 2–8).

4.1.5.1.3 For assemblies with sample probes, the calibration point should be located at or near the center of the duct; however, insertion of a probe sheath into a small duct may cause significant cross-sectional area blockage and yield incorrect coefficient values (Citation 9 in Bibliography). Therefore, to minimize the blockage effect, the calibration point may be a few inches off-center if necessary. The actual blockage effect will be negligible when the theoretical blockage, as determined by a projected-area model of the probe sheath, is 2 percent or less of the duct cross-sectional area for assemblies without external sheaths (Figure 2–10a), and 3 percent or less for assemblies with external sheaths (Figure 2–10b).

4.1.5.2 For those probe assemblies in which pitot tube-nozzle interference is a factor (i.e., those in which the pitot-nozzle separation distance fails to meet the specification illustrated in Figure 2–6a), the value of $C_{p(s)}$ depends upon the amount of free-space between the tube and nozzle, and therefore is a function of nozzle size. In these instances, separate calibrations shall be performed with each of the commonly used nozzle sizes in place. Note that the single-velocity calibration technique is acceptable for this purpose, even though the larger nozzle sizes (>0.635 cm or ¼ in.) are not ordinarily used for isokinetic sampling at velocities around 915 m/min (3,000 ft/min), which is the calibration velocity; note also that it is not necessary to draw an isokinetic sample during calibration (see Citation 19 in Section 6).

4.1.5.3 For a probe assembly constructed such that its pitot tube is always used in the same orientation, only one side of the pitot tube need be calibrated (the side which will face the flow). The pitot tube must still meet the alignment specifications of Figure 2–2 or 2–3, however, and must have an average deviation (σ) value of 0.01 or less (see Section 4.1.4.4).

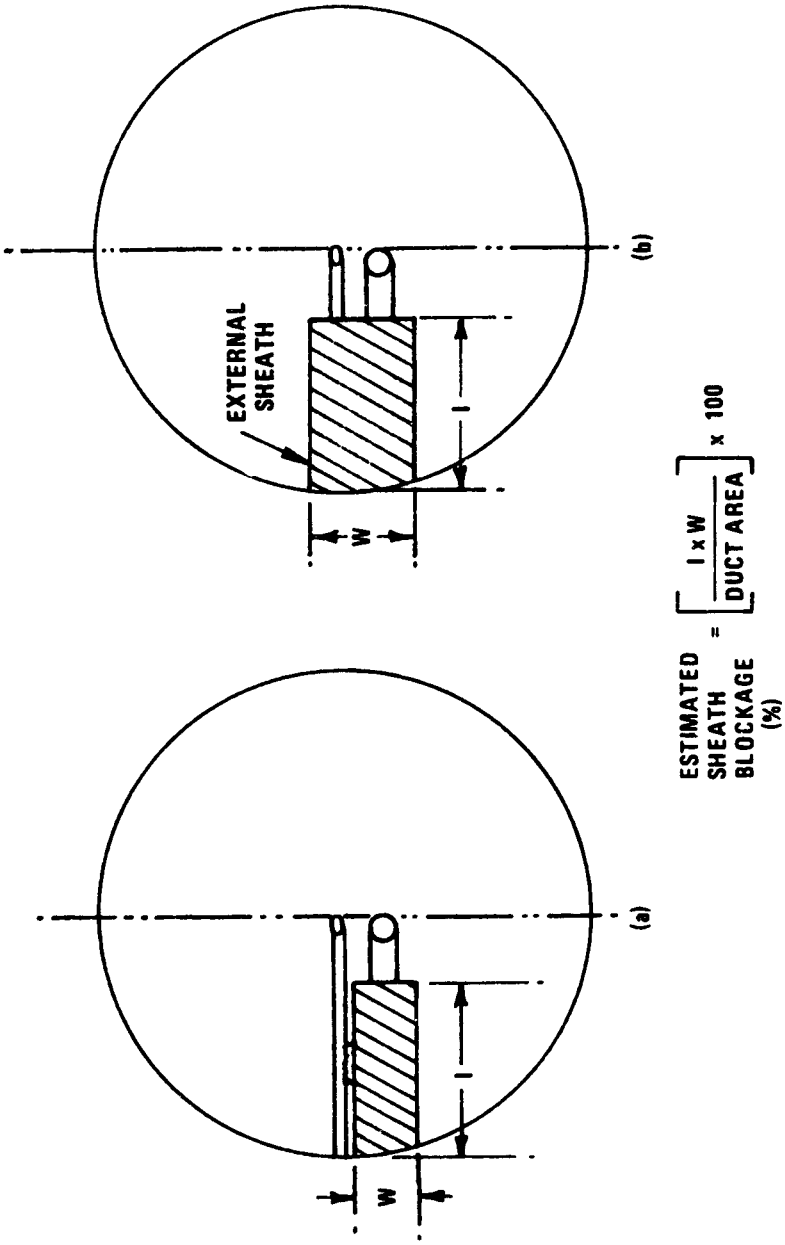

$$\text{ESTIMATED SHEATH BLOCKAGE (\%)} = \left[\frac{l \times W}{\text{DUCT AREA}}\right] \times 100$$

Figure 2-10. Projected-area models for typical pitot tube assemblies.

4.1.6 Field Use and Recalibration.

4.1.6.1 Field Use.

4.1.6.1.1 When a Type S pitot tube (isolated tube or assembly) is used in the field, the appropriate coefficient value (whether assigned or obtained by calibration) shall be used to perform velocity calculations. For

calibrated Type S pitot tubes, the A side coefficient shall be used when the A side of the tube faces the flow, and the B side coefficient shall be used when the B side faces the flow; alternatively, the arithmetic average of the A and B side coefficient values may be used, irrespective of which side faces the flow.

4.1.6.1.2 When a probe assembly is used to sample a small duct (12 to 36 in. in diameter), the probe sheath sometimes blocks a significant part of the duct cross-section, causing a reduction in the effective value of $C_{p(s)}$. Consult Citation 9 in Bibliography for details. Conventional pitot-sampling probe assemblies are not recommended for use in ducts having inside diameters smaller than 12 inches (Citation 16 in Bibliography).

4.1.6.2 Recalibration.

4.1.6.2.1 Isolated Pitot Tubes. After each field use, the pitot tube shall be carefully reexamined in top, side, and end views. If the pitot face openings are still aligned within the specifications illustrated in Figure 2–2 or 2–3, it can be assumed that the baseline coefficient of the pitot tube has not changed. If, however, the tube has been damaged to the extent that it no longer meets the specifications of Figure 2–2 or 2–3, the damage shall either be repaired to restore proper alignment of the face openings or the tube shall be discarded.

4.1.6.2.2 Pitot Tube Assemblies. After each field use, check the face opening alignment of the pitot tube, as in Section 4.1.6.2.1; also, remeasure the intercomponent spacings of the assembly. If the intercomponent spacings have not changed and the face opening alignment is acceptable, it can be assumed that the coefficient of the assembly has not changed. If the face opening alignment is no longer within the specifications of Figures 2–2 or 2–3, either repair the damage or replace the pitot tube (calibrating the new assembly, if necessary). If the intercomponent spacings have changed, restore the original spacings or recalibrate the assembly.

4.2 Standard pitot tube (if applicable). If a standard pitot tube is used for the velocity traverse, the tube shall be constructed according to the criteria of Section 2.7 and shall be assigned a baseline coefficient value of 0.99. If the standard pitot tube is used as part of an assembly, the tube shall be in an interference-free arrangement (subject to the approval of the Administrator).

4.3 Temperature Gauges. After each field use, calibrate dial thermometers, liquid-filled bulb thermometers, thermocouple-potentiometer systems, and other gauges at a temperature within 10 percent of the average absolute stack temperature. For temperatures up to 405 °C (761 °F), use an ASTM mercury-in-glass reference thermometer, or equivalent, as a reference; alternatively, either a reference thermocouple and potentiometer (calibrated by NBS) or thermometric fixed points, e.g., ice bath and boiling water (corrected for barometric pressure) may be used. For temperatures above 405 °C (761 °F), use an NBS-calibrated reference thermocouple-potentiometer system or an alternate reference, subject to the approval of the Administrator.

If, during calibration, the absolute temperatures measured with the gauge being calibrated and the reference gauge agree within 1.5 percent, the temperature data taken in the field shall be considered valid. Otherwise, the pollutant emission test shall either be considered invalid or adjustments (if appropriate) of the test results shall be made, subject to the approval of the Administrator.

4.4 Barometer. Calibrate the barometer used against a mercury barometer.

5. *Calculations*

Carry out calculations, retaining at least one extra decimal figure beyond that of the acquired data. Round off figures after final calculation.

5.1 Nomenclature.

A=Cross-sectional area of stack, $m^2(ft^2)$.

B_{ws}=Water vapor in the gas stream (from Method 5 or Reference Method 4), proportion by volume.

C_p=Pitot tube coefficient, dimensionless.

K_p=Pitot tube constant,

$$34.97 \frac{\text{m}}{\text{sec}} \left[\frac{(g/g\text{-mole})(\text{mm Hg})}{(°\text{K})(\text{mm H}_2\text{O})}\right]^{1/2}$$

for the metric system and

$$85.49 \frac{\text{ft}}{\text{sec}} \left[\frac{(\text{lb/lb-mole})(\text{in. Hg})}{(°\text{R})(\text{in. H}_2\text{O})}\right]^{1/2}$$

for the English system.

M_d=Molecular weight of stack gas, dry basis (see Section 3.6) g/g-mole (lb/lb-mole).

M_s=Molecular weight of stack gas, wet basis, g/g-mole (lb/lb-mole).

$$=M_d\,(1-B_{ws})+18.0\,B_{ws} \qquad \text{Eq. 2–5}$$

P_{bar}=Barometric pressure at measurement site, mm Hg (in. Hg).

P_g=Stack static pressure, mm Hg (in. Hg).

P_s=Absolute stack gas pressure, mm Hg (in. Hg).

$$=P_{bar}+P_g \qquad \text{Eq. 2–6}$$

P_{std}=Standard absolute pressure, 760 mm Hg (29.92 in. Hg).

Q_{sd}=Dry volumetric stack gas flow rate corrected to standard conditions, dscm/hr (dscf/hr).

t_s=Stack temperature, °C (°F).

T_s=Absolute stack temperature, °K, (°R).

$$=273+t_s \text{ for metric.} \qquad \text{Eq. 2–7}$$

$$=460+t_s \text{ for English.}$$

Eq. 2–8

T_{std}=Standard absolute temperature, 293 °K (528° R).

v_s=Average stack gas velocity, m/sec (ft/sec).

Δp=Velocity head of stack gas, mm H_2O (in. H_2O).

3,600=Conversion factor, sec/hr.

18.0=Molecular weight of water, g/g-mole (lb/lb-mole).

5.2 Average Stack Gas Velocity.

$$v_s = K_p C_p (\sqrt{\Delta p})_{avg} \sqrt{\frac{T_{s(avg)}}{P_s M_s}}$$

Equation 2–9

5.3 Average Stack Gas Dry Volumetric Flow Rate.

$$Q_{sd} = 3{,}600\left(1 - B_{ws}\right) v_s A \frac{T_{std}}{T_{s(avg)}} \frac{P_s}{P_{std}} \qquad \text{Eq. 2-10}$$

To convert Q_{sd} from dscm/hr (dscf/hr) to dscm/min (dscf/min), divide Q_{sd} by 60.

6. *Bibliography*

1. Mark, L. S. Mechanical Engineers' Handbook. New York, McGraw-Hill Book Co., Inc. 1951.

2. Perry, J. H. Chemical Engineers' Handbook. New York. McGraw-Hill Book Co., Inc. 1960.

3. Shigehara, R. T., W. F. Todd, and W. S. Smith. Significance of Errors in Stack Sampling Measurements. U.S. Environmental Protection Agency, Research Triangle Park, NC (Presented at the Annual Meeting of the Air Pollution Control Association, St. Louis, MO, June 14–19, 1970.)

4. Standard Method for Sampling Stacks for Particulate Matter. In: 1971 Book of ASTM Standards, Part 23. Philadelphia, PA 1971. ASTM Designation D–2928–71.

5. Vennard, J. K. Elementary Fluid Mechanics. New York. John Wiley and Sons, Inc. 1947.

6. Fluid Meters—Their Theory and Application. American Society of Mechanical Engineers, New York, NY 1959.

7. ASHRAE Handbook of Fundamentals. 1972. p. 208.

8. Annual Book of ASTM Standards, Part 26. 1974. p. 648.

9. Vollaro, R. F. Guidelines for Type S Pitot Tube Calibration. U.S. Environmental Protection Agency. Research Triangle Park, NC (Presented at 1st Annual Meeting, Source Evaluation Society, Dayton, OH, September 18, 1975.)

10. Vollaro, R. F. A Type S Pitot Tube Calibration Study. U.S. Environmental Protection Agency, Emission Measurement Branch, Research Triangle Park, NC July 1974.

11. Vollaro, R. F. The Effects of Impact Opening Misalignment on the Value of the Type S Pitot Tube Coefficient. U.S. Environmental Protection Agency, Emission Measurement Branch, Research Triangle Park, NC. October 1976.

12. Vollaro, R. F. Establishment of a Basline Coefficient Value for Properly Constructed Type S Pitot Tubes. U.S. Environmental Protection Agency, Emission Measurement Branch, Research Triangle Park, NC. November 1976.

13. Vollaro, R. F. An Evaluation of Single-Velocity Calibration Technique as a Means of Determining Type S Pitot Tubes Coefficient. U.S. Environmental Protection Agency, Emission Measurement Branch, Research Triangle Park, NC. August 1975.

14. Vollaro, R. F. The Use of Type S Pitot Tubes for the Measurement of Low Velocities. U.S. Environmental Protection Agency, Emission Measurement Branch, Research Triangle Park, NC. November 1976.

15. Smith, Marvin L. Velocity Calibration of EPA Type Source Sampling Probe. United Technologies Corporation, Pratt and Whitney Aircraft Division, East Hartford, CN. 1975.

16. Vollaro, R. F. Recommended Procedure for Sample Traverses in Ducts Smaller than 12 Inches in Diameter. U.S. Environmental Protection Agency, Emission Measurement Branch, Research Triangle Park, NC. November 1976.

17. Ower, E. and R. C. Pankhurst. The Measurement of Air Flow, 4th Ed., London, Pergamon Press. 1966.

18. Vollaro, R. F. A Survey of Commercially Available Instrumentation for the Measurement of Low-Range Gas Velocities. U.S. Environmental Protection Agency, Emission Measurement Branch, Research Triangle Park, NC. November 1976. (Unpublished Paper)

19. Gnyp, A. W., C. C. St. Pierre, D. S. Smith, D. Mozzon, and J. Steiner. An Experimental Investigation of the Effect of Pitot Tube-Sampling Probe Configurations on the Magnitude of the S Type Pitot Tube Coefficient for Commercially Available Source Sampling Probes. Prepared by the University of Windsor for the Ministry of the Environment, Toronto, Canada. February 1975.

METHOD 2A—DIRECT MEASUREMENT OF GAS VOLUME THROUGH PIPES AND SMALL DUCTS

1. *Applicability and Principle*

1.1 Applicability. This method applies to the measurement of gas flow rates in pipes and small ducts, either in-line or at exhaust positions, within the temperature range of 0 to 50 °C.

1.2 Principle. A gas volume meter is used to measure gas volume directly. Temperature and pressure measurements are made to correct the volume to standard conditions.

2. *Apparatus*

Specifications for the apparatus are given below. Any other apparatus that has been demonstrated (subject to approval of the Administrator) to be capable of meeting the specifications will be considered acceptable.

2.1 Gas Volume Meter. A positive displacement meter, turbine meter, or other direct volume measuring device capable of measuring volume to within 2 percent. The meter shall be equipped with a temperature gauge (±2 percent of the minimum absolute temperature) and a pressure gauge (±2.5 mm Hg). The manufacturer's recommended capacity of the meter shall be sufficient for the expected maximum and minimum flow rates at the sampling conditions. Temperature, pressure, corrosive characteristics, and pipe size are factors necessary to consider in choosing a suitable gas meter.

2.2 Barometer. A mercury, aneroid, or other barometer capable of measuring atmospheric pressure to within 2.5 mm Hg. In many cases, the barometric reading may be obtained from a nearby National Weather Service station, in which case the station value (which is the absolute barometric pressure) shall be requested, and an adjustment for elevation differences between the weather station and the sampling point shall be applied at a rate of minus 2.5 mm Hg per 30-meter elevation increase, or vice-versa for elevation decrease.

2.3 Stopwatch. Capable of measurement to within 1 second.

3. *Procedure*

3.1 Installation. As there are numerous types of pipes and small ducts that may be subject to volume measurement, it would be difficult to describe all possible installation schemes. In general, flange fittings should be used for all connections wherever possible. Gaskets or other seal materials should be used to assure leak-tight connections. The volume meter should be located so as to avoid severe vibrations and other factors that may affect the meter calibration.

3.2 Leak Test. A volume meter installed at a location under positive pressure may be leak-checked at the meter connections by using a liquid leak detector solution containing a surfactant. Apply a small amount of the solution to the connections. If a leak exists, bubbles will form, and the leak must be corrected.

A volume meter installed at a location under negative pressure is very difficult to test for leaks without blocking flow at the inlet of the line and watching for meter movement. If this procedure is not possible, visually check all connections and assure tight seals.

3.3 Volume Measurement.

3.3.1 For sources with continuous, steady emission flow rates, record the initial meter volume reading, meter temperature(s), meter pressure, and start the stopwatch. Throughout the test period, record the meter temperature(s) and pressure so that average values can be determined. At the end of the test, stop the timer and record the elapsed time, the final volume reading, meter temperature(s), and pressure. Record the barometric pressure at the beginning and end of the test run. Record the data on a table similar to Figure 2A–1.

Plant_____

Date_____ Run Number_____

Sample Location_____

Barometric Pressure mm Hg Start_____ Finish_____

Operators_____

Meter Number_____ Meter Calibration Coefficient_____

Last Date Calibrated_____

Time Run/clock	Volume Meter reading	Static pressure mm Hg	Temperature °C	°K
Average				

Figure 2A-1. Volume flow rate measurement data.

3.3.2 For sources with noncontinuous, non-steady emission flow rates, use the procedure in 3.3.1 with the addition of the following: Record all the meter parameters and the start and stop times corresponding to each process cyclical or noncontinuous event.

4. *Calibration*

4.1 Volume Meter. The volume meter is calibrated against a standard reference meter prior to its initial use in the field. The reference meter is a spirometer or liquid displacement meter with a capacity consistent with that of the test meter.

Alternatively, a calibrated, standard pitot may be used as the reference meter in conjunction with a wind tunnel assembly. Attach the test meter to the wind tunnel so that the total flow passes through the test meter. For each calibration run, conduct a 4-point traverse along one stack diameter at a position at least eight diameters of straight tunnel downstream and two diameters upstream of any bend, inlet, or air mover. Determine the traverse point locations as specified in Method 1. Calculate the reference volume using the velocity values following the procedure in Method 2, the wind tunnel cross-sectional area, and the run time.

Set up the test meter in a configuration similar to that used in the field installation (i.e., in relation to the flow moving device). Connect the temperature and pressure gauges as they are to be used in the field. Connect the reference meter at the inlet of the flow line, if appropriate for the meter, and begin gas flow through the system to condition the meters. During this conditioning operation, check the system for leaks.

The calibration shall be run over at least three different flow rates. The calibration flow rates shall be about 0.3, 0.6, and 0.9 times the test meter's rated maximum flow rate.

For each calibration run, the data to be collected include: reference meter initial and final volume readings, the test meter initial and final volume reading, meter average temperature and pressure, barometric pressure, and run time. Repeat the runs at each flow rate at least three times.

Calculate the test meter calibration coefficient, Y_m, for each run as follows:

$$Y_m = \frac{(V_{rf} - V_{ri})(t_r + 273)}{(V_{mf} - V_{mi})(t_m + 273)} \frac{P_b}{(P_b + P_g)} \qquad \text{Eq. 2A-1}$$

Where:

Y_m=Test volume meter calibration coefficient, dimensionless.

V_r=Reference meter volume reading, m^3.

V_m=Test meter volume reading, m^3.

t_r=Reference meter average temperature, ° C.

t_m=Test meter average temperature, ° C.

P_b=Barometric pressure, mm Hg.

P_g=Test meter average static pressure, mm Hg.

f=Final reading for run.

i=Initial reading for run.

Compare the three Y_m values at each of the flow rates tested and determine the maximum and minimum values. The difference between the maximum and minimum values at each flow rate should be no greater than 0.030. Extra runs may be required to complete this requirement. If this specification cannot be met in six successive runs, the test meter is not suitable for use. In addition, the meter coefficients should be between 0.95 and 1.05. If these specifications are met at all the flow rates, average all the Y_m values from runs meeting the specifications to obtain an average meter calibration coefficient, Y_m.

The procedure above shall be performed at least once for each volume meter. Thereafter, an abbreviated calibration check shall be completed following each field test. The calibration of the volume meter shall be checked by performing three calibration runs at a single, intermediate flow rate (based on the previous field test) with the meter pressure set at the average value encountered in the field test. Calculate the average value of the calibration factor. If the calibration has changed by more than 5 percent, recalibrate the meter over the full range of flow as described above.

NOTE. If the volume meter calibration coefficient values obtained before and after a test series differ by more than 5 percent, the test series shall either be voided, or calculations for the test series shall be performed using whichever meter coefficient value (i.e., before or after) gives the greater value of pollutant emission rate.

4.2 Temperature Gauge. After each test series, check the temperature gauge at ambient temperature. Use an American Society for Testing and Materials (ASTM) mercury-in-glass reference thermometer, or equivalent, as a reference. If the gauge being checked agrees within 2 percent (absolute temperature) of the reference, the temperature data collected in the field shall be considered valid. Otherwise, the test data shall be considered invalid or adjustments of the test results shall be made, subject to the approval of the Administrator.

4.3 Barometer. Calibrate the barometer used against a mercury barometer prior to the field test.

5. *Calculations*

Carry out the calculations, retaining at least one extra decimal figure beyond that of

the acquired data. Round off figures after the final calculation.

5.1 Nomenclature.

P_b=Barometric pressure, mm Hg.

P_g=Average static pressure in volume meter, mm Hg.

Q_s=Gas flow rate, m^3/min, standard conditions.

T_m=Average absolute meter temperature, °K.

V_m=Meter volume reading, m^3.

Y_m=Average meter calibration coefficient, dimensionless.

f=Final reading for test period.

i=Initial reading for test period.

s=Standard conditions, 20 °C and 760 mm Hg.

Θ=Elapsed test period time, min.

5.2 Volume.

$$V_{ms} = 0.3853\ Y_m \left(V_{mf} - V_{mi}\right) \frac{\left(P_b + P_g\right)}{T_m} \qquad \text{Eq. 2A-2}$$

5.3 Gas Flow Rate.

$$Q_s = \frac{V_{ms}}{\theta} \qquad \text{Eq. 2A-3}$$

6. *Bibliography*

1. Rom, Jerome J. Maintenance, Calibration, and Operation of Isokinetic Source Sampling Equipment. U.S. Environmental Protection Agency. Research Triangle Park, NC, Publication No. APTD–0576. March 1972.

2. Wortman, Martin, R. Vollaro, and P.R. Westlin. Dry Gas Volume Meter Calibrations. Source Evaluation Society Newsletter. Vol. 2, No. 2. May 1977.

3. Westlin, P.R. and R.T. Shigehara. Procedure for Calibrating and Using Dry Gas Volume Meters as Calibration Standards. Source Evaluation Society Newsletter. Vol. 3, No. 1. February 1978.

METHOD 2B—DETERMINATION OF EXHAUST GAS VOLUME FLOW RATE FROM GASOLINE VAPOR INCINERATORS

1. *Applicability and Principle*

1.1 Applicability. This method applies to the measurement of exhaust volume flow rate from incinerators that process gasoline vapors consisting primarily of alkanes, alkenes, and/or arenes (aromatic hydrocarbons). It is assumed that the amount of auxiliary fuel is negligible.

1.2 Principle. The incinerator exhaust flow rate is determined by carbon balance. Organic carbon concentration and volume flow rate are measured at the incinerator inlet. Organic carbon, carbon dioxide (CO_2), and carbon monoxide (CO) concentrations are measured at the outlet. Then the ratio of total carbon at the incinerator inlet and outlet is multiplied by the inlet volume to determine the exhaust volume and volume flow rate.

2. *Apparatus*

2.1 Volume Meter. Equipment described in Method 2A.

2.2 Organic Analyzers (2). Equipment described in Method 25A or 25B.

2.3 CO Analyzer. Equipment described in Method 10.

2.4 CO_2 Analyzer. A nondispersive infrared (NDIR) CO_2 analyzer and supporting equipment with comparable specifications as CO analyzer described in Method 10.

3. *Procedure*

3.1 Inlet Installation. Install a volume meter in the vapor line to incinerator inlet according to the procedure in Method 2A. At the volume meter inlet, install a sample probe as described in Method 25A. Connect to the probe a leak-tight, heated (if necessary to prevent condensation) sample line (stainless steel or equivalent) and an organic analyzer system as described in Method 25A or 25B.

3.2 Exhaust Installation. Three sample analyzers are required for the incinerator exhaust: CO_2, CO, and organic analyzers. A sample manifold with a single sample probe may be used. Install a sample probe as described in Method 25A. Connect a leak-tight heated sample line to the sample probe. Heat the sample line sufficiently to prevent any condensation.

3.3 Recording Requirements. The output of each analyzer must be permanently recorded on an analog strip chart, digital recorder, or other recording device. The chart speed or number of readings per time unit must be similar for all analyzers so that data can be correlated. The minimum data recording requirement for each analyzer is one measurement value per minute.

3.4 Preparation. Prepare and calibrate all equipment and analyzers according to the procedures in the respective methods. For the CO_2 analyzer, follow the procedures described in Method 10 for CO analysis substituting CO_2 calibration gas where the method calls for CO calibration gas. The span value for the CO_2 analyzer shall be 15 percent by volume. All calibration gases must be introduced at the connection between the probe and the sample line. If a

manifold system is used for the exhaust analyzers, all the analyzers and sample pumps must be operating when the calibrations are done. Note: For the purposes of this test, methane should not be used as an organic calibration gas.

3.5 Sampling. At the beginning of the test period, record the initial parameters for the inlet volume meter according to the procedures in Method 2A and mark all of the recorder strip charts to indicate the start of the test. Continue recording inlet organic and exhaust CO_2, CO, and organic concentrations throughout the test. During periods of process interruption and halting of gas flow, stop the timer and mark the recorder strip charts so that data from this interruption are not included in the calculations. At the end of the test period, record the final parameters for the inlet volume meter and mark the end on all of the recorder strip charts.

3.6 Post Test Calibrations. At the conclusion of the sampling period, introduce the calibration gases as specified in the respective reference methods. If an analyzer output does not meet the specifications of the method, invalidate the test data for the period. Alternatively, calculate the volume results using initial calibration data and using final calibration data and report both resulting volumes. Then, for emissions calculations, use the volume measurement resulting in the greatest emission rate or concentration.

4. *Calculations*

Carry out the calculations, retaining at least one extra decimal figure beyond that of the acquired data. Round off figures after the final calculation.

4.1 Nomenclature.

CO_e=Mean carbon monoxide concentration in system exhaust, ppm.

CO_{2e}=Mean carbon dioxide concentration in system exhaust, ppm.

HC_e=Mean organic concentration in system exhaust as defined by the calibration gas, ppm.

HC_i=Mean organic concentration in system inlet as defined by the calibration gas, ppm.

K=Calibration gas factor

=2 for ethane calibration gas.

=3 for propane calibration gas.

=4 for butane calibration gas.

=Appropriate response factor for other calibration gas.

V_{es}=Exhaust gas volume, m^3.

V_{is}=Inlet gas volume, m^3.

Q_{es}=Exhaust gas volume flow rate, m^3/min.

Q_{is}=Inlet gas volume flow rate, m^3/min.

Θ=Sample run time, min.

s=Standard conditions: 20 °C, 760 mm Hg.

300=Estimated concentration of ambient CO_2, ppm. (CO_2 concentration in the ambient air may be measured during the test period using an NDIR).

4.2 Concentrations. Determine mean concentrations of inlet organics, outlet CO_2, outlet CO, and outlet organics according to the procedures in the respective methods and the analyzers' calibration curves, and for the time intervals specified in the applicable regulations. Concentrations should be determined on a parts per million by volume (ppm) basis.

4.3 Exhaust Gas Volume. Calculate the exhaust gas volume as follows:

$$V_{es} = V_{is}\frac{K(HC_i)}{K(HC_e)+CO_{2e}+CO_e-300} \qquad \text{Eq. 2B-1}$$

4.4 Exhaust Gas Volume Flow Rate. Calculate the exhaust gas volume flow rate as follows:

$$Q_{es}=V_{es}/\theta \qquad \text{Eq. 2B–2}$$

5. *Bibliography*

1. Measurement of Volatile Organic Compounds. U.S. Environmental Protection Agency. Office of Air Quality Planning and Standards, Research Triangle Park, NC 27711. Publication No. EPA–450/2–78–041. October 1978. 55 p.

METHOD 2C—DETERMINATION OF STACK GAS VELOCITY AND VOLUMETRIC FLOW RATE IN SMALL STACKS OR DUCTS (STANDARD PITOT TUBE)

1. Applicability and Principle

1.1 Applicability.

1.1.1 The applicability of this method is identical to Method 2, except this method is limited to stationery source stacks or ducts less than about 0.30 meter (12 in.) in diameter or 0.071 m^2 (113 $in.^2$) in cross-sectional area, but equal to or greater than about 0.10 meter (4 in.) in diameter or 0.0081 m^2 (12.57 $in.^2$) in cross-sectional area.

1.1.2 The apparatus, procedure, calibration, calculations, and biliography are the

same as in Method 2, Sections 2, 3, 4, 5, and 6, except as noted in the following sections.

1.2 Principle. The average gas velocity in a stack or duct is determined from the gas density and from measurement of velocity heads with a standard pitot tube.

2. Apparatus

2.1 Standard Pitot Tube (instead of Type S). Use a standard pitot tube that meets the specifications of Section 2.7 of Method 2. Use a coefficient value of 0.99 unless it is calibrated against another standard pitot tube with an NBS-traceable coefficient.

2.2 Alternative Pitot Tube. A modified hemispherical-nosed pitot tube (see Figure 2C–1), which features a shortened stem and enlarged impact and static pressure holes, may be used. This pitot tube is useful in liquid drop-laden gas streams when a pitot ''back purge'' is ineffective. Use a coefficient value of 0.99 unless the pitot is calibrated as mentioned in Section 2.1 above.

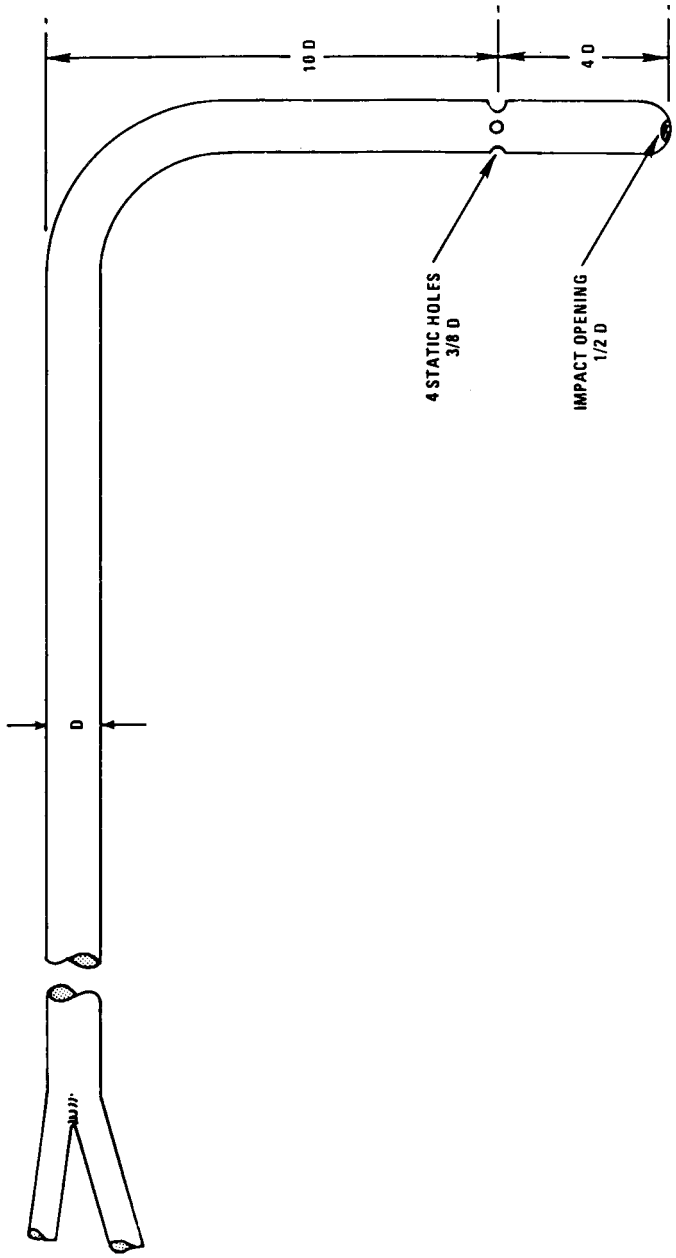

Figure 2C-1. Modified hemispherical-nosed pitot tube.

3. Procedure

Follow the general procedures in Section 3 of Method 2, except conduct the measurements at the traverse points specified in Method 1A. The static and impact pressure holes of standard pitot tubes are susceptible to plugging in PM–laden gas streams. Therefore, the tester must furnish adequate proof

that the openings of the pitot tube have not plugged during the traverse period; this proof can be obained by first recording the velocity head (Δp) reading at the final traverse point, then cleaning out the impact and static holes of the standard pitot tube by ''back-purging'' with pressurized air, and finally by recording another Δp reading at the final traverse point. If the Δp reading made after the air purge is within 5 percent of the reading during the traverse, then the traverse is acceptable. Otherwise, reject the run. Note that if the Δp at the final traverse point is so low as to make this determination too difficult, then another traverse point may be selected. If ''back purging'' at regular intervals is part of the procedure, then take comparative Δp readings, as above, for the last two back purges at which suitable high Δp readings are observed.

METHOD 2D—MEASUREMENT OF GAS VOLUMETRIC FLOW RATES IN SMALL PIPES AND DUCTS

1. Applicability and Principle

1.1 Applicability. This method applies to the measurement of gas flow rates in small pipes and ducts, either before or after emission control devices.

1.2 Principle. To measure flow rate or pressure drop, all the stack gas is directed through a rotameter, orifice plate or similar flow rate measuring device. The measuring device has been previously calibrated in a manner that insures its proper calibration for the gas or gas mixture being measured. Absolute temperature and pressure measurements are also made to calculate volumetric flow rates at standard conditions.

2. Apparatus

Specifications for the apparatus are given below. Any other apparatus that has been demonstrated (subject to approval of the Administrator) to be capable of meeting the specifications will be considered acceptable.

2.1 Flow Rate Measuring Device. A rotameter, orifice plate, or other flow rate measuring device capable of measuring all the stack flow rate to within 5 percent of its true value. The measuring device shall be equipped with a temperature gauge accurate to within 2 percent of the minimum absolute stack temperature and a pressure gauge accurate to within 5 mm Hg. The capacity of the measuring device shall be sufficient for the expected maximum and minimum flow rates at the stack gas conditions. The magnitude and variability of stack gas flow rate, molecular weight, temperature, pressure, compressibility, dew point, corrosiveness, and pipe or duct size are all factors to consider in choosing a suitable measuring device.

2.2 Barometer. Same as in Method 2, Section 2.5.

2.3 Stopwatch. Capable of incremental time measurement to within 1 second.

3. Procedure

3.1 Installation. Use the procedure in Method 2A, Section 3.1.

3.2 Leak Check. Use the procedure in Method 2A, Section 3.2.

3.3 Flow Rate Measurement.

3.3.1 Continuous, Steady Flow. At least once an hour, record the measuring device flow rate reading, and the measuring device temperature and pressure. Make a minimum of twelve equally spaced readings of each parameter during the test period. Record the barometric pressure at the beginning and end of the test period. Record the data on a table similar to Figure 2D–1.

Plant
Date Run number
Sample location
Barometric pressure, mm (in.) Hg
Start Finish
Operators
Measuring device number Calibration coefficient
Calibration gas
Last date calibrated

Time	Flow rate reading	Static pressure mm (in.) Hg	Temperature	
			°C (°F)	°K (°R)
	Average.			

Figure 2D–1. Flow rate measurement data.

3.3.2 Noncontinuous and Nonsteady Flows. Use flow rate measuring devices with particular caution. Calibration will be affected by variation in stack gas temperature, pressure, compressibility, and molecular weight. Use the procedure in Section 3.3.1. Record all the measuring device parameters on a time interval frequency sufficient to adequately profile each process cyclical or noncontinuous event. A multichannel continuous recorder may be used.

4. Calibration

4.1 Flow Rate Measuring Device. Use the procedure in Method 2A, Section 4, and apply the same performance standards. Calibrate the measuring device with the principal stack gas to be measured (e.g., air, nitrogen) against a standard reference meter. A calibrated dry gas meter is an acceptable reference meter. Ideally, calibrate the measuring device in the field with the actual gas to be measured. For measuring devices that have a volume rate readout, calculate the measuring device calibration coefficient, Y_m, for each run as follows:

$$Y_m = \frac{(Q_r)(T_r)P_{bar}}{(Q_m)(T_m)(P_{bar} + P_g)} \qquad \text{Eq. 2D-1}$$

where:

Q_r=reference meter flow rate reading, m^3/min (ft^3/min).

Q_m=measuring device flow rate reading, m^3/min (ft^3/min).

T_r=reference meter average absolute temperature, ° K (° R).

T_m=measuring device average absolute temperature, ° K (° R).

P_{bar}=barometric pressure, mm Hg (in. Hg).

P_g=measuring device average static pressure, mm Hg (in. Hg).

For measuring devices that do not have a readout as flow rate, refer to the manufacturer's instructions to calculate the Q_m corresponding to each Q_r.

4.2 Temperature Gauge. Use the procedure and specifications in Method 2A, Section 4.2. Perform the calibration at a temperature that approximates field test conditions.

4.3 Barometer. Calibrate the barometer to be used in the field test with a mercury barometer prior to the field test.

5. Gas Flow Rate Calculation

Calculate the stack gas flow rate, Q_s, as follows:

$$Q_s = K_1 Y_m Q_m \frac{(P_{bar} + P_g)}{T_m} \qquad \text{Eq. 2D-2}$$

where:

K_1 = 0.3858 for international system of units (SI); 17.64 for English units.

6. Bibliography

1. Spink, L.K. Principles and Practice of Flowmeter Engineering. The Foxboro Company. Foxboro, MA. 1967.

2. Benedict, Robert P. Fundamentals of Temperature, Pressure, and Flow Measurements. John Wiley and Sons, Inc. New York, NY. 1969.

3. Orifice Metering of Natural Gas. American Gas Association. Arlington, VA. Report No. 3. March 1978. 88 p.

METHOD 2E—DETERMINATION OF LANDFILL GAS; GAS PRODUCTION FLOW RATE

1. Applicability and Principle

1.1 Applicability. This method applies to the measurement of landfill gas (LFG) production flow rate from municipal solid waste (MSW) landfills and is used to calculate the flow rate of nonmethane organic compounds (NMOC) from landfills. This method also applies to calculating a site-specific k value as provided in §60.754(a)(4). It is unlikely that a site-specific k value obtained through Method 2E testing will lower the annual emission estimate below 50 Mg/yr NMOC unless the Tier 2 emission estimate is only slightly higher than 50 Mg/yr NMOC. Dry, arid regions may show a more significant difference between the default and calculated k values than wet regions.

1.2 Principle. Extraction wells are installed either in a cluster of three or at five locations dispersed throughout the landfill. A blower is used to extract LFG from the landfill. LFG composition, landfill pressures near the extraction well, and volumetric flow rate of LFG extracted from the wells are measured and the landfill gas production flow rate is calculated.

2. Apparatus

2.1 Well Drilling Rig. Capable of boring a 0.6 meters diameter hole into the landfill to a minimum of 75 percent of the landfill depth. The depth of the well shall not exceed the bottom of the landfill or the liquid level.

2.2 Gravel. No fines. Gravel diameter should be appreciably larger than perforations stated in sections 2.10 and 3.2 of this method.

2.3 Bentonite.

2.4 Backfill Material. Clay, soil, and sandy loam have been found to be acceptable.

2.5 Extraction Well Pipe. Polyvinyl chloride (PVC), high density polyethylene (HDPE), fiberglass, stainless steel, or other suitable nonporous material capable of transporting landfill gas with a minimum diameter of 0.075 meters and suitable wall-thickness.

2.6 Wellhead Assembly. Valve capable of adjusting gas flow at the wellhead and outlet, and a flow measuring device, such as an in-line orifice meter or pitot tube. A schematic of the wellhead assembly is shown in figure 1.

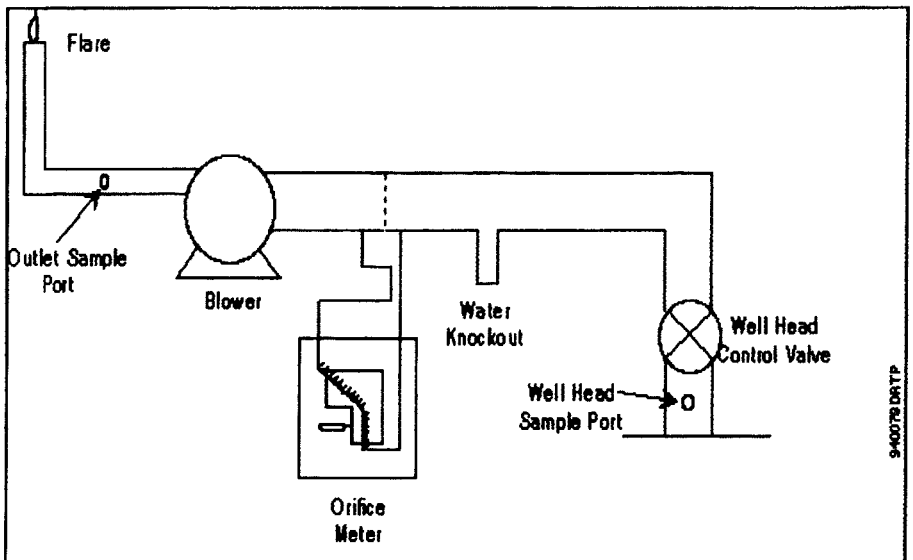

Figure 1. Schematic of above ground well head assembly.

2.7 Cap. PVC, HDPE, fiberglass, stainless steel, or other suitable nonporous material capable of transporting landfill gas with a suitable wall-thickness.

2.8 Header Piping. PVC, HDPE, fiberglass, stainless steel, or other suitable nonporous material capable of transporting landfill gas with a suitable wall-thickness.

2.9 Auger. Capable of boring a 0.15 to 0.23 meters diameter hole to a depth equal to the top of the perforated section of the extraction well, for pressure probe installation.

2.10 Pressure Probe. PVC or stainless steel (316), 0.025 meters. Schedule 40 pipe. Perforate the bottom two thirds. A minimum requirement for perforations is slots or holes with an open area equivalent to four 6.0 millimeter diameter holes spaced 90° apart every 0.15 meters.

2.11 Blower and Flare Assembly. A water knockout, flare or incinerator, and an explosion-proof blower, capable of extracting LFG at a flow rate of at least 8.5 cubic meters per minute.

2.12 Standard Pitot Tube and Differential Pressure Gauge for Flow Rate Calibration with Standard Pitot. Same as Method 2, sections 2.1 and 2.8.

2.13 Gas flow measuring device. Permanently mounted Type S pitot tube or an orifice meter.

2.14 Barometer. Same as Method 4, section 2.1.5.

2.15 Differential Pressure Gauge. Water-filled U-tube manometer or equivalent, capable of measuring within 0.02 mm Hg, for measuring the pressure of the pressure probes.

3. Procedure

3.1 Placement of Extraction Wells. The landfill owner or operator shall either install a single cluster of three extraction wells in a test area or space five wells over the landfill. The cluster wells are recommended but may be used only if the composition, age of the solid waste, and the landfill depth of the test area can be determined. CAUTION: Since this method is complex, only experienced personnel should conduct the test. Landfill gas contains methane, therefore explosive mixtures may exist at or near the landfill. It is advisable to take appropriate safety precautions when testing landfills, such as installing explosion-proof equipment and refraining from smoking.

3.1.1 Cluster Wells. Consult landfill site records for the age of the solid waste, depth, and composition of various sections of the landfill. Select an area near the perimeter of the landfill with a depth equal to or greater than the average depth of the landfill and with the average age of the solid waste between 2 and 10 years old. Avoid areas known to contain nondecomposable materials, such as concrete and asbestos. Locate wells as shown in figure 2.

Because the age of the solid waste in a test area will not be uniform, calculate a weighted average to determine the average age of the solid waste as follows.

$$A_{avg} = \sum_{i=1}^{n} f_i A_i$$

where,

A_{avg}=average age of the solid waste tested, year

f_i=fraction of the solid waste in the ith section

A_i=age of the ith fraction, year

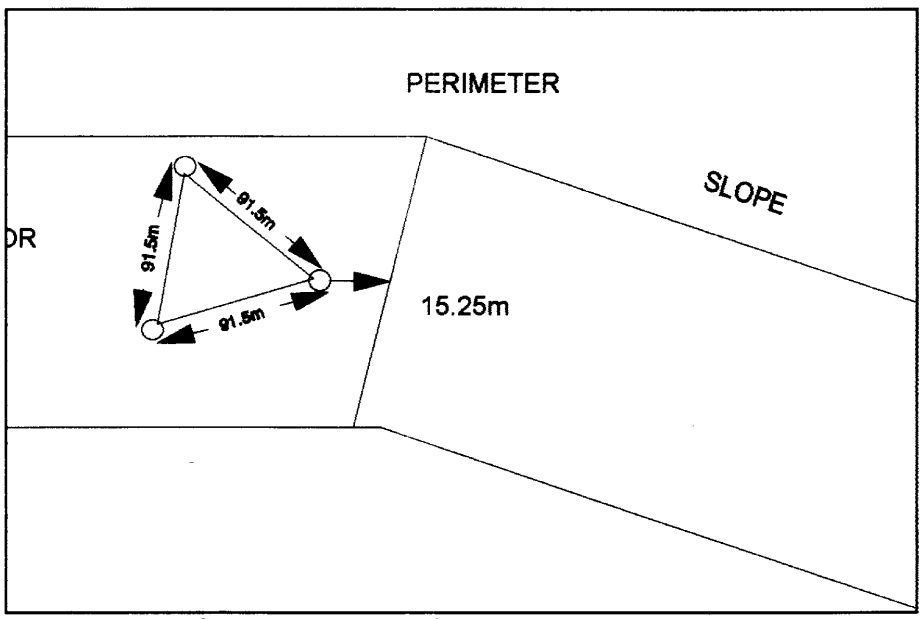

Figure 2. Location of Cluster Wells

3.1.2 Equal Volume Wells. This procedure is used when the composition, age of solid waste, and landfill depth are not well known. Divide the portion of the landfill that has had waste for at least 2 years into five areas representing equal volumes. Locate an extraction well near the center of each area. Avoid areas known to contain nondecomposable materials, such as concrete and asbestos.

3.2 Installation of Extraction Wells. Use a well drilling rig to dig a 0.6 meters diameter hole in the landfill to a minimum of 75 percent of the landfill depth, not to exceed the bottom of the landfill or the water table. Perforate the bottom two thirds of the extraction well pipe. Perforations shall not be closer than 6 meters from the cover. Perforations shall be holes or slots with an open area equivalent to 1.0 centimeter diameter holes spaced 90 degrees apart every 0.1 to 0.2 meters. Place the extraction well in the center of the hole and backfill with 2.0 to 7.5 centimeters gravel to a level 0.3 meters above the perforated section. Add a layer of backfill material 1.2 meters thick. Add a layer of bentonite 1.0 meter thick, and backfill the remainder of the hole with cover material or material equal in permeability to the existing cover material. The specifications for extraction well installation are shown in figure 3.

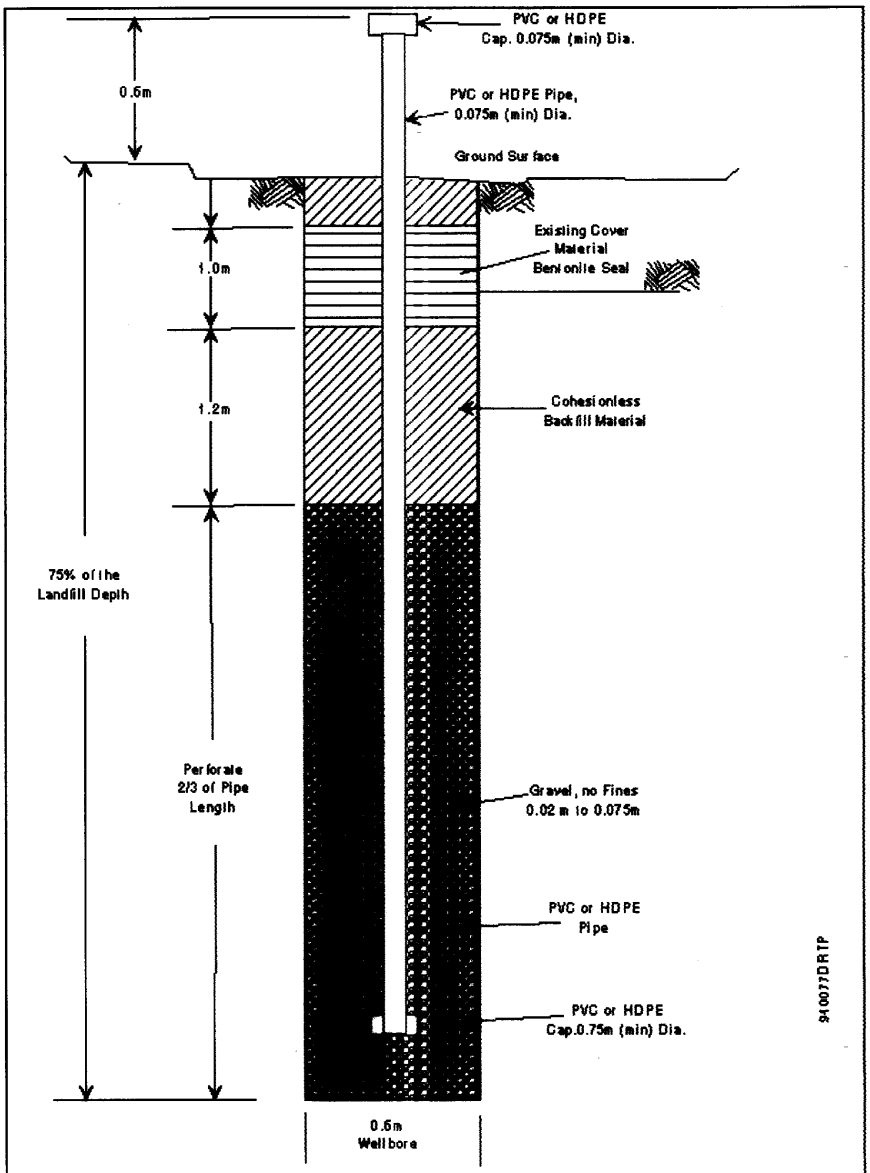

Figure 3. Gas extraction well.

3.3 Pressure Probes. Shallow pressure probes are used in the check for infiltration of air into the landfill, and deep pressure probes are used to determine the radius of influence. Locate the deep pressure probes along three radial arms approximately 120 degrees apart at distances of 3, 15, 30, and 45 meters from the extraction well. The tester

has the option of locating additional pressure probes at distances every 15 meters beyond 45 meters. Example placements of probes are shown in figure 4.

The probes located 15, 30, and 45 meters from each well, and any additional probes located along the three radial arms (deep probes), shall extend to a depth equal to the top of the perforated section of the extraction wells. Locate three shallow probes at a distance of 3 m from the extraction well. Shallow probes shall extend to a depth equal to half the depth of the deep probes.

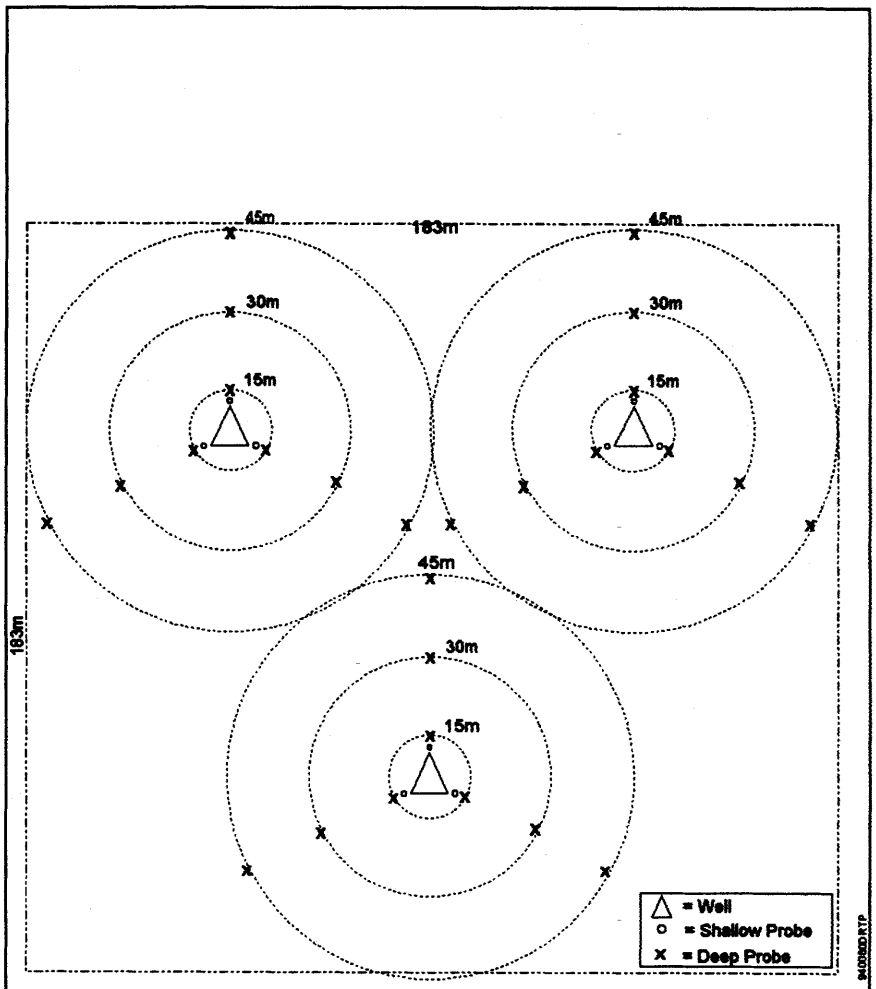

Figure 4. Cluster well configuration.

Use an auger to dig a hole, approximately 0.15 to 0.23 meters in diameter, for each pressure probe. Perforate the bottom two thirds of the pressure probe. Perforations shall be holes or slots with an open area equivalent to four 6.0 millimeter diameter holes spaced 90 degrees apart every 0.15 meters. Place the pressure probe in the center of the hole and

backfill with gravel to a level 0.30 meters above the perforated section. Add a layer of backfill material at least 1.2 meters thick. Add a layer of bentonite at least 0.3 meters thick, and backfill the remainder of the hole with cover material or material equal in permeability to the existing cover material. The specifications for pressure probe installation are shown in figure 5.

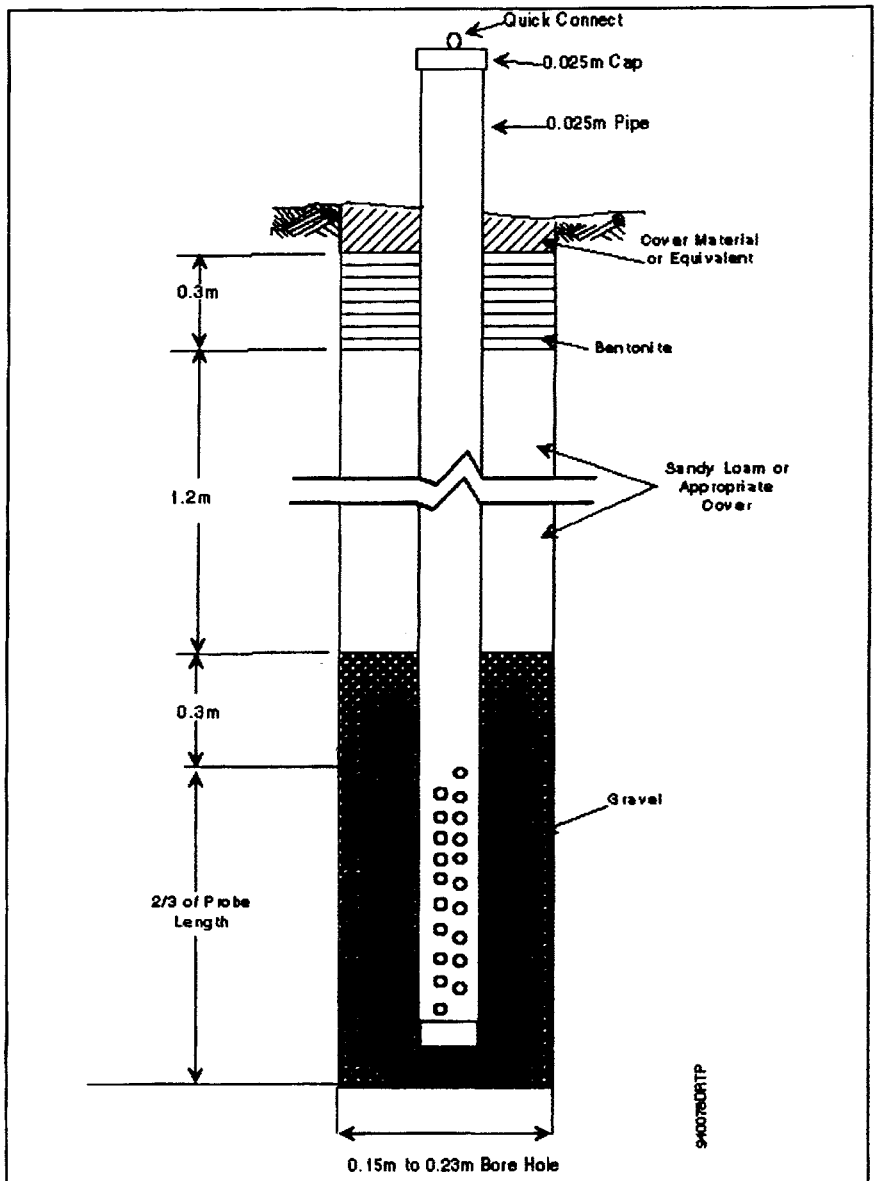

Figure 5. Pressure probe.

3.4 LFG Flow Rate Measurement. Determine the flow rate of LFG from the test wells continuously during testing with an orifice meter. Alternative methods to measure the LFG flow rate may be used with approval of the Administrator. Locate the orifice meter as shown in figure 1. Attach the wells to the blower and flare assembly. The

individual wells may be ducted to a common header so that a single blower and flare assembly and flow meter may be used. Use the procedures in section 4.1 to calibrate the flow meter.

3.5 Leak Check. A leak check of the above ground system is required for accurate flow rate measurements and for safety. Sample LFG at the wellhead sample port and at a point downstream of the flow measuring device. Use Method 3C to determine nitrogen (N_2) concentrations. Determine the difference by using the formula below.

$$\text{Difference}=C_o-C_w$$

where,

C_o=concentration of N_2 at the outlet, ppmv

C_w=concentration of N_2 at the wellhead, ppmv

The system passes the leak check if the difference is less than 10,000 ppmv. If the system fails the leak check, make the appropriate adjustments to the above ground system and repeat the leak check.

3.6 Static Testing. The purpose of the static testing is to determine the initial conditions of the landfill. Close the control valves on the wells so that there is no flow of landfill gas from the well. Measure the gauge pressure (P_g) at each deep pressure probe and the barometric pressure (P_{bar}) every 8 hours for 3 days. Convert the gauge pressure of each deep pressure probe to absolute pressure by using the following equation. Record as P_i.

$$P_i=P_{bar}+P_g$$

where,

P_{bar}=Atmospheric pressure, mm Hg

P_g=Gauge pressure of the deep probes, mm Hg

P_i=Initial absolute pressure of the deep probes during static testing, mm Hg

3.6.1 For each probe, average all of the 8 hr deep pressure probe readings and record as P_{ia}. The P_{ia} is used in section 3.7.6 to determine the maximum radius of influence.

3.6.2 Measure the LFG temperature and the static flow rate of each well once during static testing using a flow measurement device, such as a Type S pitot tube and measure the temperature of the landfill gas. The flow measurements should be made either just before or just after the measurements of the probe pressures and are used in determining the initial flow from the extraction well during the short term testing. The temperature measurement is used in the check for infiltration.

3.7 Short Term Testing. The purpose of short term testing is to determine the maximum vacuum that can be applied to the wells without infiltration of air into the landfill. The short term testing is done on one well at a time. During the short term testing, burn LFG with a flare or incinerator.

3.7.1 Use the blower to extract LFG from a single well at a rate at least twice the static flow rate of the respective well measured in section 3.6.2. If using a single blower and flare assembly and a common header system, close the control valve on the wells not being measured. Allow 24 hours for the system to stabilize at this flow rate.

3.7.2 Check for infiltration of air into the landfill by measuring the temperature of the LFG at the wellhead, the gauge pressures of the shallow pressure probes, and the LFG N_2 concentration by using Method 3C. CAUTION: Increased vacuum at the wellhead may cause infiltration of air into the landfill, which increases the possibility of a landfill fire. Infiltration of air into the landfill may occur if any of the following conditions are met: the LFG N_2 concentration is more than 20 percent, any of the shallow probes have a negative gauge pressure, or the temperature has increased above 55 °C or the maximum established temperature during static testing. If infiltration has not occurred, increase the blower vacuum by 4 mm Hg, wait 24 hours, and repeat the infiltration check. If at any time, the temperature change exceeds the limit, stop the test until it is safe to proceed. Continue the above steps of increasing blower vacuum by 4 mm Hg, waiting 24 hours, and checking for infiltration until the concentration of N_2 exceeds 20 percent or any of the shallow probes have a negative gauge pressure, at which time reduce the vacuum at the wellhead so that the N_2 concentration is less than 20 percent and the gauge pressures of the shallow probes are positive. This is the maximum vacuum at which infiltration does not occur.

3.7.3 At this maximum vacuum, measure P_{bar} every 8 hours for 24 hours and record the LFG flow rate as Q_s and the probe gauge pressures for all of the probes as P_f. Convert the gauge pressures of the deep probes to absolute pressures for each 8-hour reading at Q_s as follows:

$$P=P_{bar}+P_f$$

where,

P_{bar}=Atmospheric pressure, mm Hg

P_f=Final absolute pressure of the deep probes during short term testing, mm Hg

P=Pressure of the deep probes, mm Hg

3.7.4 For each probe, average the 8-hr deep pressure probe readings and record as P_{fa}.

3.7.5 For each probe, compare the initial average pressure (P_{ia}) from section 3.6.1 to the final average pressure (P_{fa}). Determine the furthermost point from the wellhead along each radial arm where $P_{fa} \leq P_{ia}$. This distance is the maximum radius of influence (ROI), which is the distance from the well affected by the vacuum. Average these values to determine the average maximum radius of influence (R_{ma}).

The average R_{ma} may also be determined by plotting on semi-log paper the pressure

differentials (P_{fa}-P_{ia}) on the y-axis (abscissa) versus the distances (3, 15, 30 and 45 meters) from the wellhead on the x-axis (ordinate). Use a linear regression analysis to determine the distance when the pressure differential is zero. Additional pressure probes may be used to obtain more points on the semi-long plot of pressure differentials versus distances.

3.7.6 Calculate the depth (D_{st}) affected by the extraction well during the short term test as follows. If the computed value of D_{st} exceeds the depth of the landfill, set D_{st} equal to the landfill depth.

D_{st}=WD + R_{ma}^2

where,

D_{st}=depth, m
WD=well depth, m
R_{ma}=maximum radius of influence, m

3.7.7 Calculate the void volume for the extraction well (V) as follows.

$V=0.40\ R_{ma}^2\ D_{st}$

where,

V=void volume of test well, m^3
R_{ma}=maximum radius of influence, m
D_{st}=depth, m

3.7.8 Repeat the procedures in section 3.7 for each well.

3.8 Calculate the total void volume of the test wells (V_v) by summing the void volumes (V) of each well.

3.9 Long Term Testing. The purpose of long term testing is to determine the methane generation rate constant, k. Use the blower to extract LFG from the wells. If a single blower and flare assembly and common header system are used, open all control valves and set the blower vacuum equal to the highest stabilized blower vacuum demonstrated by any individual well in section 3.7. Every 8 hours, sample the LFG from the wellhead sample port, measure the gauge pressures of the shallow pressure probes, the blower vacuum, the LFG flow rate, and use the criteria for infiltration in section 3.7.2 and Method 3C to check for infiltration. If infiltration is detected, do not reduce the blower vacuum, but reduce the LFG flow rate from the well by adjusting the control valve on the wellhead. Adjust each affected well individually. Continue until the equivalent of two total void volumes (V_v) have been extracted, or until V_t=2 V_v.

3.9.1 Calculate V_t, the total volume of LFG extracted from the wells, as follows.

$$V_t = \sum_{i=1}^{n} 60\ Q_i\ t_{vi}$$

where,

V_t=total volume of LFG extracted from wells, m^3
Q_i=LFG flow rate measured at orifice meter at the ith interval, cubic meters per minute
t_{vi}=time of the ith interval, hour (usually 8)

3.9.2 Record the final stabilized flow rate as Q_f. If, during the long term testing, the flow rate does not stabilize, calculate Q_f by averaging the last 10 recorded flow rates.

3.9.3 For each deep probe, convert each gauge pressure to absolute pressure as in section 3.7.4. Average these values and record as P_{sa}. For each probe, compare P_{ia} to P_{sa}. Determine the furthermost point from the wellhead along each radial arm where $P_{sa} \leq P_{ia}$. This distance is the stabilized radius of influence. Average these values to determine the average stabilized radius of influence (R_{sa}).

3.10 Determine the NMOC mass emission rate using the procedures in section 5.

3.11 Deactivation of pressure probe holes. Upon completion of measurements, if pressure probes are removed, restore the integrity of the landfill cover by backfilling and sealing to prevent venting of LFG to the atmosphere or air infiltration.

4. Calibrations

Gas Flow Measuring Device Calibration Procedure. Locate a standard pitot tube in line with a gas flow measuring device. Use the procedures in Method 2D, section 4, to calibrate the orifice meter. Method 3C may be used to determine the dry molecular weight. It may be necessary to calibrate more than one gas flow measuring device to bracket the landfill gas flow rates. Construct a calibration curve by plotting the pressure drops across the gas flow measuring device for each flow rate versus the average dry gas volumetric flow rate in cubic meters per minute of the gas. Use this calibration curve to determine the volumetric flow from the wells during testing.

5. Calculations

5.1 Nomenclature.

A_{avg}=average age of the solid waste tested, year
A_i=age of solid waste in the ith fraction, year
A=age of landfill, year
A_r=acceptance rate, megagrams per year
C_{NMOC}=NMOC concentration, ppmv as hexane (C_{NMOC}=C_t/6)
C_t=NMOC concentration, ppmv (carbon equivalent) from Method 25C
D = depth affected by the test wells, m
D_{st}=depth affected by the test wells in the short term test, m
D_{LF}=landfill depth, m
f = fraction of decomposable solid waste in the landfill
f_i=fraction of the solid waste in the ith section
k=methane generation rate constant, $year^{-1}$
L_o=methane generation potential, cubic meters per megagram
L_o=revised methane generation potential to account for the amount of

nondecomposable material in the landfill, cubic meters per megagram

M_i=mass of solid waste of the ith section, megagrams

M_r=mass of decomposable solid waste affected by the test well, megagrams

M_w=number of wells

P_{bar}=atmospheric pressure, mm Hg

P_g=gauge pressure of the deep pressure probes, mm Hg

P_i=initial absolute pressure of the deep pressure probes during static testing, mm Hg

P_{ia}=average initial absolute pressure of the deep pressure probes during static testing, mm Hg

P_f=final absolute pressure of the deep pressure probes during short term testing, mm Hg

P_{fa}=average final absolute pressure of the deep pressure probes during short term testing, mm Hg

P_s=final absolute pressure of the deep pressure probes during long term testing, mm Hg

P_{sa}=average final absolute pressure of the deep pressure probes during long term testing, mm Hg

Q_B=required blow flow rate, cubic meters per minute

Q_f=final stabilized flow rate, cubic meters per minute

Q_i=LFG flow rate measured at orifice meter during the ith interval, cubic meters per minute

Q_s=maximum LFG flow rate at each well determined by short term test, cubic meters per minute

Q_t=NMOC mass emission rate, cubic meters per minute

R_m=maximum radius of influence, m

R_{ma}=average maximum radius of influence, m

R_s=stabilized radius of influence for an individual well, m

R_{sa}=average stabilized radius of influence, m

t_i=age of section i, year

t_t=total time of long term testing, year

V=void volume of test well, m^3

V_r=volume of solid waste affected by the test well, m^3

V_t=total volume of solid waste affected by the long term testing, m^3

V_v=total void volume affected by test wells, m^3

WD=well depth, m

ρ=solid waste density, m^3 (Assume 0.64 megagrams per cubic meter if data are unavailable)

5.2 Use the following equation to calculate the depth affected by the test well. If using cluster wells, use the average depth of the wells for WD. If the value of D is greater than the depth of the landfill, set D equal to the landfill depth.

$D=WD+R_{sa}$

5.3 Use the following equation to calculate the volume of solid waste affected by the test well.

$V_r=R_{sa}^2 \dagger D$

5.4 Use the following equation to calculate the mass affected by the test well.

$M_r=V_r\rho$

5.5 Modify L_o to account for the nondecomposable solid waste in the landfill.

$L_o'=f\ L_o$

5.6 In the following equation, solve for k by iteration. A suggested procedure is to select a value for k, calculate the left side of the equation, and if not equal to zero, select another value for k. Continue this process until the left hand side of the equation equals zero, #0.001.

$$ke^{-k}A_{avg}-\left(5.256\times10^{5}\right)\frac{Q_f}{2\ L_o'\ M_r}=0$$

5.7 Use the following equation to determine landfill NMOC mass emission rate if the yearly acceptance rate of solid waste has been consistent (±10 percent) over the life of the landfill.

$Q_t = 2\ L_o'\ A_r\ (1 - e^{-k}\ A)\ C_{NMOC} / (5.256 \times 10^{11})$

5.8 Use the following equation to determine landfill NMOC mass emission rate if the acceptance rate has not been consistent over the life of the landfill.

$$Q_t=\frac{2\ kL_o'\ C_{NMOC}}{\left(5.256\times10^{11}\right)}\sum_{i=1}^{n}M_ie^{-kt}i$$

6. Bibliography

1. Same as Method 2, appendix A, 40 CFR part 60.

2. Emcon Associates, Methane Generation and Recovery from Landfills. Ann Arbor Science, 1982.

3. The Johns Hopkins University, Brown Station Road Testing and Gas Recovery Projections. Laurel, Maryland: October 1982.

4. Mandeville and Associates, Procedure Manual for Landfill Gases Emission Testing.

5. Letter and attachments from Briggum, S., Waste Management of North America, to Thorneloe, S., EPA. Response to July 28, 1988 request for additional information. August 18,1988.

6. Letter and attachments from Briggum, S., Waste Management of North America, to Wyatt, S., EPA. Response to December 7, 1988 request for additional information. January 16, 1989.

METHOD 2F—DETERMINATION OF STACK GAS VELOCITY AND VOLUMETRIC FLOW RATE WITH THREE-DIMENSIONAL PROBES

NOTE: This method does not include all of the specifications (e.g., equipment and supplies) and procedures (e.g., sampling) essential to its performance. Some material has been incorporated from other methods in this part. Therefore, to obtain reliable results, those using this method should have a thorough knowledge of at least the following additional test methods: Methods 1, 2, 3 or 3A, and 4.

1.0 Scope and Application

1.1 This method is applicable for the determination of yaw angle, pitch angle, axial velocity and the volumetric flow rate of a gas stream in a stack or duct using a three-dimensional (3–D) probe. This method may be used only when the average stack or duct gas velocity is greater than or equal to 20 ft/sec. When the above condition cannot be met, alternative procedures, approved by the Administrator, U.S. Environmental Protection Agency, shall be used to make accurate flow rate determinations.

2.0 Summary of Method

2.1 A 3–D probe is used to determine the velocity pressure and the yaw and pitch angles of the flow velocity vector in a stack or duct. The method determines the yaw angle directly by rotating the probe to null the pressure across a pair of symmetrically placed ports on the probe head. The pitch angle is calculated using probe-specific calibration curves. From these values and a determination of the stack gas density, the average axial velocity of the stack gas is calculated. The average gas volumetric flow rate in the stack or duct is then determined from the average axial velocity.

3.0 Definitions

3.1. *Angle-measuring Device Rotational Offset* (R_{ADO}). The rotational position of an angle-measuring device relative to the reference scribe line, as determined during the pre-test rotational position check described in section 8.3.

3.2 *Axial Velocity*. The velocity vector parallel to the axis of the stack or duct that accounts for the yaw and pitch angle components of gas flow. The term ''axial'' is used herein to indicate that the velocity and volumetric flow rate results account for the measured yaw and pitch components of flow at each measurement point.

3.3 *Calibration Pitot Tube.* The standard (Prandtl type) pitot tube used as a reference when calibrating a 3–D probe under this method.

3.4 *Field Test.* A set of measurements conducted at a specific unit or exhaust stack/duct to satisfy the applicable regulation (e.g., a three-run boiler performance test, a single-or multiple-load nine-run relative accuracy test).

3.5 *Full Scale of Pressure-measuring Device.* Full scale refers to the upper limit of the measurement range displayed by the device. For bi-directional pressure gauges, full scale includes the entire pressure range from the lowest negative value to the highest positive value on the pressure scale.

3.6 *Main probe.* Refers to the probe head and that section of probe sheath directly attached to the probe head. The main probe sheath is distinguished from probe extensions, which are sections of sheath added onto the main probe to extend its reach.

3.7 *''May,'' ''Must,'' ''Shall,'' ''Should,''* and the imperative form of verbs.

3.7.1 *''May''* is used to indicate that a provision of this method is optional.

3.7.2 *''Must,'' ''Shall,''* and the imperative form of verbs (such as ''record'' or ''enter'') are used to indicate that a provision of this method is mandatory.

3.7.3 *''Should''* is used to indicate that a provision of this method is not mandatory, but is highly recommended as good practice.

3.8 *Method 1.* Refers to 40 CFR part 60, appendix A, ''Method 1—Sample and velocity traverses for stationary sources.''

3.9 *Method 2.* Refers to 40 CFR part 60, appendix A, ''Method 2—Determination of stack gas velocity and volumetric flow rate (Type S pitot tube).''

3.10 *Method 2G.* Refers to 40 CFR part 60, appendix A, ''Method 2G—Determination of stack gas velocity and volumetric flow rate with two-dimensional probes.''

3.11 *Nominal Velocity*. Refers to a wind tunnel velocity setting that approximates the actual wind tunnel velocity to within ±1.5 m/sec (±5 ft/sec).

3.12 *Pitch Angle.* The angle between the axis of the stack or duct and the pitch component of flow, i.e., the component of the total velocity vector in a plane defined by the traverse line and the axis of the stack or duct. (Figure 2F–1 illustrates the ''pitch plane.'') From the standpoint of a tester facing a test port in a vertical stack, the pitch component of flow is the vector of flow moving from the center of the stack toward or away from that test port. The pitch angle is the angle described by this pitch component of flow and the vertical axis of the stack.

3.13 *Readability*. For the purposes of this method, readability for an analog measurement device is one half of the smallest scale division. For a digital measurement device, it is the number of decimals displayed by the device.

3.14 *Reference Scribe Line.* A line permanently inscribed on the main probe sheath (in accordance with section 6.1.6.1) to serve

as a reference mark for determining yaw angles.

3.15 *Reference Scribe Line Rotational Offset* (R_{SLO}). The rotational position of a probe's reference scribe line relative to the probe's yaw-null position, as determined during the yaw angle calibration described in section 10.5.

3.16 *Response Time.* The time required for the measurement system to fully respond to a change from zero differential pressure and ambient temperature to the stable stack or duct pressure and temperature readings at a traverse point.

3.17 *Tested Probe.* A 3–D probe that is being calibrated.

3.18 *Three-dimensional (3–D) Probe.* A directional probe used to determine the velocity pressure and yaw and pitch angles in a flowing gas stream.

3.19 *Traverse Line.* A diameter or axis extending across a stack or duct on which measurements of differential pressure and flow angles are made.

3.20 *Wind Tunnel Calibration Location.* A point, line, area, or volume within the wind tunnel test section at, along, or within which probes are calibrated. At a particular wind tunnel velocity setting, the average velocity pressures at specified points at, along, or within the calibration location shall vary by no more than 2 percent or 0.3 mm H_2O (0.01 in. H_2O), whichever is less restrictive, from the average velocity pressure at the calibration pitot tube location. Air flow at this location shall be axial, i.e., yaw and pitch angles within ±3°. Compliance with these flow criteria shall be demonstrated by performing the procedures prescribed in sections 10.1.1 and 10.1.2. For circular tunnels, no part of the calibration location may be closer to the tunnel wall than 10.2 cm (4 in.) or 25 percent of the tunnel diameter, whichever is farther from the wall. For elliptical or rectangular tunnels, no part of the calibration location may be closer to the tunnel wall than 10.2 cm (4 in.) or 25 percent of the applicable cross-sectional axis, whichever is farther from the wall.

3.21 *Wind Tunnel with Documented Axial Flow.* A wind tunnel facility documented as meeting the provisions of sections 10.1.1 (velocity pressure cross-check) and 10.1.2 (axial flow verification) using the procedures described in these sections or alternative procedures determined to be technically equivalent.

3.22 *Yaw Angle.* The angle between the axis of the stack or duct and the yaw component of flow, i.e., the component of the total velocity vector in a plane perpendicular to the traverse line at a particular traverse point. (Figure 2F–1 illustrates the ''yaw plane.'') From the standpoint of a tester facing a test port in a vertical stack, the yaw component of flow is the vector of flow moving to the left or right from the center of the stack as viewed by the tester. (This is sometimes referred to as ''vortex flow,'' i.e., flow around the centerline of a stack or duct.) The yaw angle is the angle described by this yaw component of flow and the vertical axis of the stack. The algebraic sign convention is illustrated in Figure 2F–2.

3.23 *Yaw Nulling.* A procedure in which a probe is rotated about its axis in a stack or duct until a zero differential pressure reading (''yaw null'') is obtained. When a 3–D probe is yaw-nulled, its impact pressure port (P_1) faces directly into the direction of flow in the stack or duct and the differential pressure between pressure ports P_2 and P_3 is zero.

4.0 *Interferences.* [Reserved]

5.0 *Safety.*

5.1 This test method may involve hazardous operations and the use of hazardous materials or equipment. This method does not purport to address all of the safety problems associated with its use. It is the responsibility of the user to establish and implement appropriate safety and health practices and to determine the applicability of regulatory limitations before using this test method.

6.0 Equipment and Supplies

6.1 *Three-dimensional Probes.* The 3–D probes as specified in subsections 6.1.1 through 6.1.3 below qualify for use based on comprehensive wind tunnel and field studies involving both inter-and intra-probe comparisons by multiple test teams. Other types of probes shall not be used unless approved by the Administrator. Each 3–D probe shall have a unique identification number or code permanently marked on the main probe sheath. The minimum recommended diameter of the sensing head of any probe used under this method is 2.5 cm (1 in.). Each probe shall be calibrated prior to use according to the procedures in section 10. Manufacturer-supplied calibration data shall be used as example information only, except when the manufacturer calibrates the 3–D probe as specified in section 10 and provides complete documentation.

6.1.1 *Five-hole prism-shaped probe.* This type of probe consists of five pressure taps in the flat facets of a prism-shaped sensing head. The pressure taps are numbered 1 through 5, with the pressures measured at each hole referred to as P_1, P_2, P_3, P_4, and P_5, respectively. Figure 2F–3 is an illustration of the placement of pressure taps on a commonly available five-hole prism-shaped probe, the 2.5-cm (1-in.) DAT probe. (Note: Mention of trade names or specific products does not constitute endorsement by the U.S. Environmental Protection Agency.) The numbering arrangement for the prism-shaped sensing head presented in Figure 2F–3 shall be followed for correct operation of the probe. A brief description of the probe

measurements involved is as follows: the differential pressure P_2–P_3 is used to yaw null the probe and determine the yaw angle; the differential pressure P_4–P_5 is a function of pitch angle; and the differential pressure P_1–P_2 is a function of total velocity.

6.1.2 *Five-hole spherical probe.* This type of probe consists of five pressure taps in a spherical sensing head. As with the prism-shaped probe, the pressure taps are numbered 1 through 5, with the pressures measured at each hole referred to as P_1, P_2, P_3, P_4, and P_5, respectively. However, the P_4 and P_5 pressure taps are in the reverse location from their respective positions on the prism-shaped probe head. The differential pressure P_2–P_3 is used to yaw null the probe and determine the yaw angle; the differential pressure P_4–P_5 is a function of pitch angle; and the differential pressure P_1–P_2 is a function of total velocity. A diagram of a typical spherical probe sensing head is presented in Figure 2F–4. Typical probe dimensions are indicated in the illustration.

6.1.3 *A manual 3–D probe* refers to a five-hole prism-shaped or spherical probe that is positioned at individual traverse points and yaw nulled manually by an operator. An automated 3–D probe refers to a system that uses a computer-controlled motorized mechanism to position the five-hole prism-shaped or spherical head at individual traverse points and perform yaw angle determinations.

6.1.4 *Other three-dimensional probes.* [Reserved]

6.1.5 *Probe sheath.* The probe shaft shall include an outer sheath to: (1) provide a surface for inscribing a permanent reference scribe line, (2) accommodate attachment of an angle-measuring device to the probe shaft, and (3) facilitate precise rotational movement of the probe for determining yaw angles. The sheath shall be rigidly attached to the probe assembly and shall enclose all pressure lines from the probe head to the farthest position away from the probe head where an angle-measuring device may be attached during use in the field. The sheath of the fully assembled probe shall be sufficiently rigid and straight at all rotational positions such that, when one end of the probe shaft is held in a horizontal position, the fully extended probe meets the horizontal straightness specifications indicated in section 8.2 below.

6.1.6 *Scribe lines.*

6.1.6.1 *Reference scribe line.* A permanent line, no greater than 1.6 mm (1/16 in.) in width, shall be inscribed on each manual probe that will be used to determine yaw angles of flow. This line shall be placed on the main probe sheath in accordance with the procedures described in section 10.4 and is used as a reference position for installation of the yaw angle-measuring device on the probe. At the discretion of the tester, the scribe line may be a single line segment placed at a particular position on the probe sheath (e.g., near the probe head), multiple line segments placed at various locations along the length of the probe sheath (e.g., at every position where a yaw angle-measuring device may be mounted), or a single continuous line extending along the full length of the probe sheath.

6.1.6.2 *Scribe line on probe extensions.* A permanent line may also be inscribed on any probe extension that will be attached to the main probe in performing field testing. This allows a yaw angle-measuring device mounted on the extension to be readily aligned with the reference scribe line on the main probe sheath.

6.1.6.3 *Alignment specifications.* This specification shall be met separately, using the procedures in section 10.4.1, on the main probe and on each probe extension. The rotational position of the scribe line or scribe line segments on the main probe or any probe extension must not vary by more than 2°. That is, the difference between the minimum and maximum of all of the rotational angles that are measured along the full length of the main probe or the probe extension must not exceed 2°.

6.1.7 Probe and system characteristics to ensure horizontal stability.

6.1.7.1 For manual probes, it is recommended that the effective length of the probe (coupled with a probe extension, if necessary) be at least 0.9 m (3 ft.) longer than the farthest traverse point mark on the probe shaft away from the probe head. The operator should maintain the probe's horizontal stability when it is fully inserted into the stack or duct. If a shorter probe is used, the probe should be inserted through a bushing sleeve, similar to the one shown in Figure 2F–5, that is installed on the test port; such a bushing shall fit snugly around the probe and be secured to the stack or duct entry port in such a manner as to maintain the probe's horizontal stability when fully inserted into the stack or duct.

6.1.7.2 An automated system that includes an external probe casing with a transport system shall have a mechanism for maintaining horizontal stability comparable to that obtained by manual probes following the provisions of this method. The automated probe assembly shall also be constructed to maintain the alignment and position of the pressure ports during sampling at each traverse point. The design of the probe casing and transport system shall allow the probe to be removed from the stack or duct and checked through direct physical measurement for angular position and insertion depth.

6.1.8 The tubing that is used to connect the probe and the pressure-measuring device should have an inside diameter of at least 3.2 mm (1/8 in.), to reduce the time required for

pressure equilibration, and should be as short as practicable.

6.2 Yaw Angle-measuring Device. One of the following devices shall be used for measurement of the yaw angle of flow.

6.2.1 Digital inclinometer. This refers to a digital device capable of measuring and displaying the rotational position of the probe to within ±1°. The device shall be able to be locked into position on the probe sheath or probe extension, so that it indicates the probe's rotational position throughout the test. A rotational position collar block that can be attached to the probe sheath (similar to the collar shown in Figure 2F–6) may be required to lock the digital inclinometer into position on the probe sheath.

6.2.2 Protractor wheel and pointer assembly. This apparatus, similar to that shown in Figure 2F–7, consists of the following components.

6.2.2.1 A protractor wheel that can be attached to a port opening and set in a fixed rotational position to indicate the yaw angle position of the probe's scribe line relative to the longitudinal axis of the stack or duct. The protractor wheel must have a measurement ring on its face that is no less than 17.8 cm (7 in.) in diameter, shall be able to be rotated to any angle and then locked into position on the stack or duct port, and shall indicate angles to a resolution of 1°.

6.2.2.2 A pointer assembly that includes an indicator needle mounted on a collar that can slide over the probe sheath and be locked into a fixed rotational position on the probe sheath. The pointer needle shall be of sufficient length, rigidity, and sharpness to allow the tester to determine the probe's angular position to within 1° from the markings on the protractor wheel. Corresponding to the position of the pointer, the collar must have a scribe line to be used in aligning the pointer with the scribe line on the probe sheath.

6.2.3 Other yaw angle-measuring devices. Other angle-measuring devices with a manufacturer's specified precision of 1° or better may be used, if approved by the Administrator.

6.3 Probe Supports and Stabilization Devices. When probes are used for determining flow angles, the probe head should be kept in a stable horizontal position. For probes longer than 3.0 m (10 ft.), the section of the probe that extends outside the test port shall be secured. Three alternative devices are suggested for maintaining the horizontal position and stability of the probe shaft during flow angle determinations and velocity pressure measurements: (1) Monorails installed above each port, (2) probe stands on which the probe shaft may be rested, or (3) bushing sleeves of sufficient length secured to the test ports to maintain probes in a horizontal position. Comparable provisions shall be made to ensure that automated systems maintain the horizontal position of the probe in the stack or duct. The physical characteristics of each test platform may dictate the most suitable type of stabilization device. Thus, the choice of a specific stabilization device is left to the judgment of the testers.

6.4 Differential Pressure Gauges. The pressure (ΔP) measuring devices used during wind tunnel calibrations and field testing shall be either electronic manometers (e.g., pressure transducers), fluid manometers, or mechanical pressure gauges (e.g., MagnehelicΔ gauges). Use of electronic manometers is recommended. Under low velocity conditions, use of electronic manometers may be necessary to obtain acceptable measurements.

6.4.1 Differential pressure-measuring device. This refers to a device capable of measuring pressure differentials and having a readability of ±1 percent of full scale. The device shall be capable of accurately measuring the maximum expected pressure differential. Such devices are used to determine the following pressure measurements: velocity pressure, static pressure, yaw-null pressure, and pitch-angle pressure. For an inclined-vertical manometer, the readability specification of ±1 percent shall be met separately using the respective full-scale upper limits of the inclined and vertical portions of the scales. To the extent practicable, the device shall be selected such that most of the pressure readings are between 10 and 90 percent of the device's full-scale measurement range (as defined in section 3.5). Typical velocity pressure (P_1–P_2) ranges for both the prism-shaped probe and the spherical probe are 0 to 1.3 cm H_2O (0 to 0.5 in. H_2O), 0 to 5.1 cm H_2O (0 to 2 in. H_2O), and 0 to 12.7 cm H_2O (0 to 5 in. H_2O). The pitch angle (P_4–P_5) pressure range is typically −6.4 to +6.4 mm H_2O (−0.25 to +0.25 in. H_2O) or −12.7 to +12.7 mm H_2O (−0.5 to +0.5 in. H_2O) for the prism-shaped probe, and −12.7 to +12.7 mm H_2O (−0.5 to +0.5 in. H_2O) or −5.1 to +5.1 cm H_2O (−2 to +2 in. H_2O) for the spherical probe. The pressure range for the yaw null (P_2–P_3) readings is typically −12.7 to +12.7 mm H_2O (−0.5 to +0.5 in. H_2O) for both probe types. In addition, pressure-measuring devices should be selected such that the zero does not drift by more than 5 percent of the average expected pressure readings to be encountered during the field test. This is particularly important under low pressure conditions.

6.4.2 Gauge used for yaw nulling. The differential pressure-measuring device chosen for yaw nulling the probe during the wind tunnel calibrations and field testing shall be bi-directional, i.e., capable of reading both positive and negative differential pressures. If a mechanical, bi-directional pressure gauge is chosen, it shall have a full-scale range no greater than 2.6 cm H_2O (1 in. H_2O) [i.e., −1.3 to +1.3 cm H_2O (−0.5 in. to +0.5 in.)].

6.4.3 Devices for calibrating differential pressure-measuring devices. A precision manometer (e.g., a U-tube, inclined, or inclined-vertical manometer, or micromanometer) or NIST (National Institute of Standards and Technology) traceable pressure source shall be used for calibrating differential pressure-measuring devices. The device shall be maintained under laboratory conditions or in a similar protected environment (e.g., a climate-controlled trailer). It shall not be used in field tests. The precision manometer shall have a scale gradation of 0.3 mm H_2O (0.01 in. H_2O), or less, in the range of 0 to 5.1 cm H_2O (0 to 2 in. H_2O) and 2.5 mm H_2O (0.1 in. H_2O), or less, in the range of 5.1 to 25.4 cm H_2O (2 to 10 in. H_2O). The manometer shall have manufacturer's documentation that it meets an accuracy specification of at least 0.5 percent of full scale. The NIST-traceable pressure source shall be recertified annually.

6.4.4 Devices used for post-test calibration check. A precision manometer meeting the specifications in section 6.4.3, a pressure-measuring device or pressure source with a documented calibration traceable to NIST, or an equivalent device approved by the Administrator shall be used for the post-test calibration check. The pressure-measuring device shall have a readability equivalent to or greater than the tested device. The pressure source shall be capable of generating pressures between 50 and 90 percent of the range of the tested device and known to within ±1 percent of the full scale of the tested device. The pressure source shall be recertified annually.

6.5 Data Display and Capture Devices. Electronic manometers (if used) shall be coupled with a data display device (such as a digital panel meter, personal computer display, or strip chart) that allows the tester to observe and validate the pressure measurements taken during testing. They shall also be connected to a data recorder (such as a data logger or a personal computer with data capture software) that has the ability to compute and retain the appropriate average value at each traverse point, identified by collection time and traverse point.

6.6 Temperature Gauges. For field tests, a thermocouple or resistance temperature detector (RTD) capable of measuring temperature to within ±3°C (±5°F) of the stack or duct temperature shall be used. The thermocouple shall be attached to the probe such that the sensor tip does not touch any metal and is located on the opposite side of the probe head from the pressure ports so as not to interfere with the gas flow around the probe head. The position of the thermocouple relative to the pressure port face openings shall be in the same configuration as used for the probe calibrations in the wind tunnel. Temperature gauges used for wind tunnel calibrations shall be capable of measuring temperature to within ±0.6°C (±1°F) of the temperature of the flowing gas stream in the wind tunnel.

6.7 Stack or Duct Static Pressure Measurement. The pressure-measuring device used with the probe shall be as specified in section 6.4 of this method. The static tap of a standard (Prandtl type) pitot tube or one leg of a Type S pitot tube with the face opening planes positioned parallel to the gas flow may be used for this measurement. Also acceptable is the pressure differential reading of P_1–P_{bar} from a five-hole prism-shaped probe (e.g., Type DA or DAT probe) with the P_1 pressure port face opening positioned parallel to the gas flow in the same manner as the Type S probe. However, the spherical probe, as specified in section 6.1.2, is unable to provide this measurement and shall not be used to take static pressure measurements. Static pressure measurement is further described in section 8.11.

6.8 Barometer. Same as Method 2, section 2.5.

6.9 Gas Density Determination Equipment. Method 3 or 3A shall be used to determine the dry molecular weight of the stack gas. Method 4 shall be used for moisture content determination and computation of stack gas wet molecular weight. Other methods may be used, if approved by the Administrator.

6.10 Calibration Pitot Tube. Same as Method 2, section 2.7.

6.11 Wind Tunnel for Probe Calibration. Wind tunnels used to calibrate velocity probes must meet the following design specifications.

6.11.1 Test section cross-sectional area. The flowing gas stream shall be confined within a circular, rectangular, or elliptical duct. The cross-sectional area of the tunnel must be large enough to ensure fully developed flow in the presence of both the calibration pitot tube and the tested probe. The calibration site, or ''test section,'' of the wind tunnel shall have a minimum diameter of 30.5 cm (12 in.) for circular or elliptical duct cross-sections or a minimum width of 30.5 cm (12 in.) on the shorter side for rectangular cross-sections. Wind tunnels shall meet the probe blockage provisions of this section and the qualification requirements prescribed in section 10.1. The projected area of the portion of the probe head, shaft, and attached devices inside the wind tunnel during calibration shall represent no more than 4 percent of the cross-sectional area of the tunnel. The projected area shall include the combined area of the calibration pitot tube and the tested probe if both probes are placed simultaneously in the same cross-sectional plane in the wind tunnel, or the larger projected area of the two probes if they are placed alternately in the wind tunnel.

6.11.2 Velocity range and stability. The wind tunnel should be capable of maintaining velocities between 6.1 m/sec and 30.5 m/

sec (20 ft/sec and 100 ft/sec). The wind tunnel shall produce fully developed flow patterns that are stable and parallel to the axis of the duct in the test section.

6.11.3 Flow profile at the calibration location. The wind tunnel shall provide axial flow within the test section calibration location (as defined in section 3.20). Yaw and pitch angles in the calibration location shall be within ±3° of 0°. The procedure for determining that this requirement has been met is described in section 10.1.2.

6.11.4 Entry ports in the wind tunnel test section.

6.11.4.1 Port for tested probe. A port shall be constructed for the tested probe. The port should have an elongated slot parallel to the axis of the duct at the test section. The elongated slot should be of sufficient length to allow attaining all the pitch angles at which the probe will be calibrated for use in the field. To facilitate alignment of the probe during calibration, the test section should include a window constructed of a transparent material to allow the tested probe to be viewed. This port shall be located to allow the head of the tested probe to be positioned within the calibration location (as defined in section 3.20) at all pitch angle settings.

6.11.4.2 Port for verification of axial flow. Depending on the equipment selected to conduct the axial flow verification prescribed in section 10.1.2, a second port, located 90° from the entry port for the tested probe, may be needed to allow verification that the gas flow is parallel to the central axis of the test section. This port should be located and constructed so as to allow one of the probes described in section 10.1.2.2 to access the same test point(s) that are accessible from the port described in section 6.11.4.1.

6.11.4.3 Port for calibration pitot tube. The calibration pitot tube shall be used in the port for the tested probe or a separate entry port. In either case, all measurements with the calibration pitot tube shall be made at the same point within the wind tunnel over the course of a probe calibration. The measurement point for the calibration pitot tube shall meet the same specifications for distance from the wall and for axial flow as described in section 3.20 for the wind tunnel calibration location.

6.11.5 Pitch angle protractor plate. A protractor plate shall be attached directly under the port used with the tested probe and set in a fixed position to indicate the pitch angle position of the probe relative to the longitudinal axis of the wind tunnel duct (similar to Figure 2F–8). The protractor plate shall indicate angles in 5° increments with a minimum resolution of ±2°. The tested probe shall be able to be locked into position at the desired pitch angle delineated on the protractor. The probe head position shall be maintained within the calibration location (as defined in section 3.20) in the test section of the wind tunnel during all tests across the range of pitch angles.

7.0 Reagents and Standards. [Reserved]

8.0 Sample Collection and Analysis

8.1 Equipment Inspection and Set-Up

8.1.1 All probes, differential pressure-measuring devices, yaw angle-measuring devices, thermocouples, and barometers shall have a current, valid calibration before being used in a field test. (See sections 10.3.3, 10.3.4, and 10.5 through10.10 for the applicable calibration requirements.)

8.1.2 Before each field use of a 3-D probe, perform a visual inspection to verify the physical condition of the probe head according to the procedures in section 10.2. Record the inspection results on a form similar to Table 2F–1. If there is visible damage to the 3-D probe, the probe shall not be used until it is recalibrated.

8.1.3 After verifying that the physical condition of the probe head is acceptable, set up the apparatus using lengths of flexible tubing that are as short as practicable. Surge tanks installed between the probe and pressure-measuring device may be used to dampen pressure fluctuations provided that an adequate measurement response time (see section 8.8) is maintained.

8.2 Horizontal Straightness Check. A horizontal straightness check shall be performed before the start of each field test, except as otherwise specified in this section. Secure the fully assembled probe (including the probe head and all probe shaft extensions) in a horizontal position using a stationary support at a point along the probe shaft approximating the location of the stack or duct entry port when the probe is sampling at the farthest traverse point from the stack or duct wall. The probe shall be rotated to detect bends. Use an angle-measuring device or trigonometry to determine the bend or sag between the probe head and the secured end. (See Figure 2F–9.) Probes that are bent or sag by more than 5° shall not be used. Although this check does not apply when the probe is used for a vertical traverse, care should be taken to avoid the use of bent probes when conducting vertical traverses. If the probe is constructed of a rigid steel material and consists of a main probe without probe extensions, this check need only be performed before the initial field use of the probe, when the probe is recalibrated, when a change is made to the the design or material of the probe assembly, and when the probe becomes bent. With such probes, a visual inspection shall be made of the fully assembled probe before each field test to determine if a bend is visible. The probe shall be rotated to detect bends. The inspection results shall be documented in the field test report. If a bend in the probe is visible, the horizontal

straightness check shall be performed before the probe is used.

8.3 Rotational Position Check. Before each field test, and each time an extension is added to the probe during a field test, a rotational position check shall be performed on all manually operated probes (except as noted in section 8.3.5, below) to ensure that, throughout testing, the angle-measuring device is either: aligned to within ±1° of the rotational position of the reference scribe line; or is affixed to the probe such that the rotational offset of the device from the reference scribe line is known to within ±1°. This check shall consist of direct measurements of the rotational positions of the reference scribe line and angle-measuring device sufficient to verify that these specifications are met. Annex A in section 18 of this method gives recommended procedures for performing the rotational position check, and Table 2F–2 gives an example data form. Procedures other than those recommended in Annex A in section 18 may be used, provided they demonstrate whether the alignment specification is met and are explained in detail in the field test report.

8.3.1 Angle-measuring device rotational offset. The tester shall maintain a record of the angle-measuring device rotational offset, R_{ADO}, as defined in section 3.1. Note that R_{ADO} is assigned a value of 0° when the angle-measuring device is aligned to within ±1° of the rotational position of the reference scribe line. The R_{ADO} shall be used to determine the yaw angle of flow in accordance with section 8.9.4.

8.3.2 Sign of angle-measuring device rotational offset. The sign of R_{ADO} is positive when the angle-measuring device (as viewed from the ''tail'' end of the probe) is positioned in a clockwise direction from the reference scribe line and negative when the device is positioned in a counterclockwise direction from the reference scribe line.

8.3.3 Angle-measuring devices that can be independently adjusted (e.g., by means of a set screw), after being locked into position on the probe sheath, may be used. However, the R_{ADO} must also take into account this adjustment.

8.3.4 Post-test check. If probe extensions remain attached to the main probe throughout the field test, the rotational position check shall be repeated, at a minimum, at the completion of the field test to ensure that the angle-measuring device has remained within ±2° of its rotational position established prior to testing. At the discretion of the tester, additional checks may be conducted after completion of testing at any sample port or after any test run. If the ±2° specification is not met, all measurements made since the last successful rotational position check must be repeated. Section 18.1.1.3 of Annex A provides an example procedure for performing the post-test check.

8.3.5 Exceptions.

8.3.5.1 A rotational position check need not be performed if, for measurements taken at all velocity traverse points, the yaw angle-measuring device is mounted and aligned directly on the reference scribe line specified in sections 6.1.6.1 and 6.1.6.3 and no independent adjustments, as described in section 8.3.3, are made to the device's rotational position.

8.3.5.2 If extensions are detached and re-attached to the probe during a field test, a rotational position check need only be performed the first time an extension is added to the probe, rather than each time the extension is re-attached, if the probe extension is designed to be locked into a mechanically fixed rotational position (e.g., through use of interlocking grooves) that can re-establish the initial rotational position to within ±1°.

8.4 Leak Checks. A pre-test leak check shall be conducted before each field test. A post-test check shall be performed at the end of the field test, but additional leak checks may be conducted after any test run or group of test runs. The post-test check may also serve as the pre-test check for the next group of test runs. If any leak check is failed, all runs since the last passed leak check are invalid. While performing the leak check procedures, also check each pressure device's responsiveness to the changes in pressure.

8.4.1 To perform the leak check, pressurize the probe's P_1 pressure port until at least 7.6 cm H_2O (3 in. H_2O) pressure, or a pressure corresponding to approximately 75 percent of the pressure-measuring device's measurement scale, whichever is less, registers on the device; then, close off the pressure port. The pressure shall remain stable [±2.5 mm H_2O (±0.10 in. H_2O)] for at least 15 seconds. Check the P_2, P_3, P_4, and P_5 pressure ports in the same fashion. Other leak-check procedures may be used, if approved by the Administrator.

8.5 Zeroing the Differential Pressure-measuring Device. Zero each differential pressure-measuring device, including the device used for yaw nulling, before each field test. At a minimum, check the zero after each field test. A zero check may also be performed after any test run or group of test runs. For fluid manometers and mechanical pressure gauges (e.g., MagnehelicΔ gauges), the zero reading shall not deviate from zero by more than ±0.8 mm H_2O (±0.03 in. H_2O) or one minor scale division, whichever is greater, between checks. For electronic manometers, the zero reading shall not deviate from zero between checks by more than: ±0.3 mm H_2O (±0.01 in. H_2O), for full scales less than or equal to 5.1 cm H_2O (2.0 in. H_2O); or ±0.8 mm H_2O (±0.03 in. H_2O), for full scales greater than 5.1 cm H_2O (2.0 in. H_2O). (Note: If negative zero drift is not directly readable, estimate the reading based on the position of

the gauge oil in the manometer or of the needle on the pressure gauge.) In addition, for all pressure-measuring devices except those used exclusively for yaw nulling, the zero reading shall not deviate from zero by more than 5 percent of the average measured differential pressure at any distinct process condition or load level. If any zero check is failed at a specific process condition or load level, all runs conducted at that process condition or load level since the last passed zero check are invalid.

8.6 Traverse Point Verification. The number and location of the traverse points shall be selected based on Method 1 guidelines. The stack or duct diameter and port nipple lengths, including any extension of the port nipples into stack or duct, shall be verified the first time the test is performed; retain and use this information for subsequent field tests, updating it as required. Physically measure the stack or duct dimensions or use a calibrated laser device; do not use engineering drawings of the stack or duct. The probe length necessary to reach each traverse point shall be recorded to within ±6.4 mm (±1/4 in.) and, for manual probes, marked on the probe sheath. In determining these lengths, the tester shall take into account both the distance that the port flange projects outside of the stack and the depth that any port nipple extends into the gas stream. The resulting point positions shall reflect the true distances from the inside wall of the stack or duct, so that when the tester aligns any of the markings with the outside face of the stack port, the probe's impact port shall be located at the appropriate distance from the inside wall for the respective Method 1 traverse point. Before beginning testing at a particular location, an out-of-stack or duct verification shall be performed on each probe that will be used to ensure that these position markings are correct. The distances measured during the verification must agree with the previously calculated distances to within ±1/4 in. For manual probes, the traverse point positions shall be verified by measuring the distance of each mark from the probe's P_1 pressure port. A comparable out-of-stack test shall be performed on automated probe systems. The probe shall be extended to each of the prescribed traverse point positions. Then, the accuracy of the positioning for each traverse point shall be verified by measuring the distance between the port flange and the probe's P_1 pressure port.

8.7 Probe Installation. Insert the probe into the test port. A solid material shall be used to seal the port.

8.8 System Response Time. Determine the response time of the probe measurement system. Insert and position the ''cold'' probe (at ambient temperature and pressure) at any Method 1 traverse point. Read and record the probe's P_1–P_2 differential pressure, temperature, and elapsed time at 15-second intervals until stable readings for both pressure and temperature are achieved. The response time is the longer of these two elapsed times. Record the response time.

8.9 Sampling.

8.9.1 Yaw angle measurement protocol. With manual probes, yaw angle measurements may be obtained in two alternative ways during the field test, either by using a yaw angle-measuring device (e.g., digital inclinometer) affixed to the probe, or using a protractor wheel and pointer assembly. For horizontal traversing, either approach may be used. For vertical traversing, i.e., when measuring from on top or into the bottom of a horizontal duct, only the protractor wheel and pointer assembly may be used. With automated probes, curve-fitting protocols may be used to obtain yaw-angle measurements.

8.9.1.1 If a yaw angle-measuring device affixed to the probe is to be used, lock the device on the probe sheath, aligning it either on the reference scribe line or in the rotational offset position established under section 8.3.1.

8.9.1.2 If a protractor wheel and pointer assembly is to be used, follow the procedures in Annex B of this method.

8.9.1.3 Other yaw angle-determination procedures. If approved by the Administrator, other procedures for determining yaw angle may be used, provided that they are verified in a wind tunnel to be able to perform the yaw angle calibration procedure as described in section 10.5.

8.9.2 Sampling strategy. At each traverse point, first yaw-null the probe, as described in section 8.9.3, below. Then, with the probe oriented into the direction of flow, measure and record the yaw angle, the differential pressures and the temperature at the traverse point, after stable readings are achieved, in accordance with sections 8.9.4 and 8.9.5. At the start of testing in each port (i.e., after a probe has been inserted into the flue gas stream), allow at least the response time to elapse before beginning to take measurements at the first traverse point accessed from that port. Provided that the probe is not removed from the flue gas stream, measurements may be taken at subsequent traverse points accessed from the same test port without waiting again for the response time to elapse.

8.9.3 Yaw-nulling procedure. In preparation for yaw angle determination, the probe must first be yaw nulled. After positioning the probe at the appropriate traverse point, perform the following procedures.

8.9.3.1 Rotate the probe until a null differential pressure reading (the difference in pressures across the P_2 and P_3 pressure ports is zero, i.e., $P_2 = P_3$) is indicated by the yaw angle pressure gauge. Read and record the

angle displayed by the angle-measuring device.

8.9.3.2 Sign of the measured angle. The angle displayed on the angle-measuring device is considered positive when the probe's impact pressure port (as viewed from the ''tail'' end of the probe) is oriented in a clockwise rotational position relative to the stack or duct axis and is considered negative when the probe's impact pressure port is oriented in a counterclockwise rotational position (see Figure 2F–10).

8.9.4 Yaw angle determination. After performing the yaw-nulling procedure in section 8.9.3, determine the yaw angle of flow according to one of the following procedures. Special care must be observed to take into account the signs of the recorded angle and all offsets.

8.9.4.1 Direct-reading. If all rotational offsets are zero or if the angle-measuring device rotational offset (R_{ADO}) determined in section 8.3 exactly compensates for the scribe line rotational offset (R_{SLO}) determined in section 10.5, then the magnitude of the yaw angle is equal to the displayed angle-measuring device reading from section 8.9.3.1. The algebraic sign of the yaw angle is determined in accordance with section 8.9.3.2.

NOTE: Under certain circumstances (e.g., testing of horizontal ducts), a 90° adjustment to the angle-measuring device readings may be necessary to obtain the correct yaw angles.

8.9.4.2 Compensation for rotational offsets during data reduction. When the angle-measuring device rotational offset does not compensate for reference scribe line rotational offset, the following procedure shall be used to determine the yaw angle:

(a) Enter the reading indicated by the angle-measuring device from section 8.9.3.1.

(b) Associate the proper algebraic sign from section 8.9.3.2 with the reading in step (a).

(c) Subtract the reference scribe line rotational offset, R_{SLO}, from the reading in step (b).

(d) Subtract the angle-measuring device rotational offset, R_{ADO}, if any, from the result obtained in step (c).

(e) The final result obtained in step (d) is the yaw angle of flow.

NOTE: It may be necessary to first apply a 90° adjustment to the reading in step (a), in order to obtain the correct yaw angle.

8.9.4.3 Record the yaw angle measurements on a form similar to Table 2F–3.

8.9.5 Velocity determination. Maintain the probe rotational position established during the yaw angle determination. Then, begin recording the pressure-measuring device readings for the impact pressure (P_1–P_2) and pitch angle pressure (P_4–P_5). These pressure measurements shall be taken over a sampling period of sufficiently long duration to ensure representative readings at each traverse point. If the pressure measurements are determined from visual readings of the pressure device or display, allow sufficient time to observe the pulsation in the readings to obtain a sight-weighted average, which is then recorded manually. If an automated data acquisition system (e.g., data logger, computer-based data recorder, strip chart recorder) is used to record the pressure measurements, obtain an integrated average of all pressure readings at the traverse point. Stack or duct gas temperature measurements shall be recorded, at a minimum, once at each traverse point. Record all necessary data as shown in the example field data form (Table 2F–3).

8.9.6 Alignment check. For manually operated probes, after the required yaw angle and differential pressure and temperature measurements have been made at each traverse point, verify (e.g., by visual inspection) that the yaw angle-measuring device has remained in proper alignment with the reference scribe line or with the rotational offset position established in section 8.3. If, for a particular traverse point, the angle-measuring device is found to be in proper alignment, proceed to the next traverse point; otherwise, re-align the device and repeat the angle and differential pressure measurements at the traverse point. In the course of a traverse, if a mark used to properly align the angle-measuring device (e.g., as described in section 18.1.1.1) cannot be located, re-establish the alignment mark before proceeding with the traverse.

8.10 Probe Plugging. Periodically check for plugging of the pressure ports by observing the responses on pressure differential readouts. Plugging causes erratic results or sluggish responses. Rotate the probe to determine whether the readouts respond in the expected direction. If plugging is detected, correct the problem and repeat the affected measurements.

8.11 Static Pressure. Measure the static pressure in the stack or duct using the equipment described in section 6.7.

8.11.1 If a Type DA or DAT probe is used for this measurement, position the probe at or between any traverse point(s) and rotate the probe until a null differential pressure reading is obtained at P_2–P_3. Rotate the probe 90°. Disconnect the P_2 pressure side of the probe and read the pressure P_1-P_{bar} and record as the static pressure. (NOTE: The spherical probe, specified in section 6.1.2, is unable to provide this measurement and shall not be used to take static pressure measurements.)

8.11.2 If a Type S probe is used for this measurement, position the probe at or between any traverse point(s) and rotate the probe until a null differential pressure reading is obtained. Disconnect the tubing from one of the pressure ports; read and record the

ΔP. For pressure devices with one-directional scales, if a deflection in the positive direction is noted with the negative side disconnected, then the static pressure is positive. Likewise, if a deflection in the positive direction is noted with the positive side disconnected, then the static pressure is negative.

8.12 Atmospheric Pressure. Determine the atmospheric pressure at the sampling elevation during each test run following the procedure described in section 2.5 of Method 2.

8.13 Molecular Weight. Determine the stack gas dry molecular weight. For combustion processes or processes that emit essentially CO_2, O_2, CO, and N_2, use Method 3 or 3A. For processes emitting essentially air, an analysis need not be conducted; use a dry molecular weight of 29.0. Other methods may be used, if approved by the Administrator.

8.14 Moisture. Determine the moisture content of the stack gas using Method 4 or equivalent.

8.15 Data Recording and Calculations. Record all required data on a form similar to Table 2F–3.

8.15.1 Selection of appropriate calibration curves. Choose the appropriate pair of F_1 and F_2 versus pitch angle calibration curves, created as described in section 10.6.

8.15.2 Pitch angle derivation. Use the appropriate calculation procedures in section 12.2 to find the pitch angle ratios that are applicable at each traverse point. Then, find the pitch angles corresponding to these pitch angle ratios on the ''F_1 versus pitch angle'' curve for the probe.

8.15.3 Velocity calibration coefficient derivation. Use the pitch angle obtained following the procedures described in section 8.15.2 to find the corresponding velocity calibration coefficients from the ''F_2 versus pitch angle'' calibration curve for the probe.

8.15.4 Calculations. Calculate the axial velocity at each traverse point using the equations presented in section 12.2 to account for the yaw and pitch angles of flow. Calculate the test run average stack gas velocity by finding the arithmetic average of the point velocity results in accordance with sections 12.3 and 12.4, and calculate the stack gas volumetric flow rate in accordance with section 12.5 or 12.6, as applicable.

9.0 Quality Control

9.1 Quality Control Activities. In conjunction with the yaw angle determination and the pressure and temperature measurements specified in section 8.9, the following quality control checks should be performed.

9.1.1 Range of the differential pressure gauge. In accordance with the specifications in section 6.4, ensure that the proper differential pressure gauge is being used for the range of ΔP values encountered. If it is necessary to change to a more sensitive gauge, replace the gauge with a gauge calibrated according to section 10.3.3, perform the leak check described in section 8.4 and the zero check described in section 8.5, and repeat the differential pressure and temperature readings at each traverse point.

9.1.2 Horizontal stability check. For horizontal traverses of a stack or duct, visually check that the probe shaft is maintained in a horizontal position prior to taking a pressure reading. Periodically, during a test run, the probe's horizontal stability should be verified by placing a carpenter's level, a digital inclinometer, or other angle-measuring device on the portion of the probe sheath that extends outside of the test port. A comparable check should be performed by automated systems.

10.0 Calibration

10.1 Wind Tunnel Qualification Checks. To qualify for use in calibrating probes, a wind tunnel shall have the design features specified in section 6.11 and satisfy the following qualification criteria. The velocity pressure cross-check in section 10.1.1 and axial flow verification in section 10.1.2 shall be performed before the initial use of the wind tunnel and repeated immediately after any alteration occurs in the wind tunnel's configuration, fans, interior surfaces, straightening vanes, controls, or other properties that could reasonably be expected to alter the flow pattern or velocity stability in the tunnel. The owner or operator of a wind tunnel used to calibrate probes according to this method shall maintain records documenting that the wind tunnel meets the requirements of sections 10.1.1 and 10.1.2 and shall provide these records to the Administrator upon request.

10.1.1 Velocity pressure cross-check. To verify that the wind tunnel produces the same velocity at the tested probe head as at the calibration pitot tube impact port, perform the following cross-check. Take three differential pressure measurements at the fixed calibration pitot tube location, using the calibration pitot tube specified in section 6.10, and take three measurements with the calibration pitot tube at the wind tunnel calibration location, as defined in section 3.20. Alternate the measurements between the two positions. Perform this procedure at the lowest and highest velocity settings at which the probes will be calibrated. Record the values on a form similar to Table 2F–4. At each velocity setting, the average velocity pressure obtained at the wind tunnel calibration location shall be within ±2 percent or 2.5 mm H_2O (0.01 in. H_2O), whichever is less restrictive, of the average velocity pressure obtained at the fixed calibration pitot tube location. This comparative check shall be performed at 2.5-cm (1-in.), or smaller, intervals across the full length, width,

and depth (if applicable) of the wind tunnel calibration location. If the criteria are not met at every tested point, the wind tunnel calibration location must be redefined, so that acceptable results are obtained at every point. Include the results of the velocity pressure cross-check in the calibration data section of the field test report. (See section 16.1.4.)

10.1.2 Axial flow verification. The following procedures shall be performed to demonstrate that there is fully developed axial flow within the calibration location and at the calibration pitot tube location. Two testing options are available to conduct this check.

10.1.2.1 Using a calibrated 3–D probe. A 3–D probe that has been previously calibrated in a wind tunnel with documented axial flow (as defined in section 3.21) may be used to conduct this check. Insert the calibrated 3–D probe into the wind tunnel test section using the tested probe port. Following the procedures in sections 8.9 and 12.2 of this method, determine the yaw and pitch angles at all the point(s) in the test section where the velocity pressure cross-check, as specified in section 10.1.1, is performed. This includes all the points in the calibration location and the point where the calibration pitot tube will be located. Determine the yaw and pitch angles at each point. Repeat these measurements at the highest and lowest velocities at which the probes will be calibrated. Record the values on a form similar to Table 2F–5. Each measured yaw and pitch angle shall be within ±3° of 0°. Exceeding the limits indicates unacceptable flow in the test section. Until the problem is corrected and acceptable flow is verified by repetition of this procedure, the wind tunnel shall not be used for calibration of probes. Include the results of the axial flow verification in the calibration data section of the field test report. (See section 16.1.4.)

10.1.2.2 Using alternative probes. Axial flow verification may be performed using an uncalibrated prism-shaped 3–D probe (e.g., DA or DAT probe) or an uncalibrated wedge probe. (Figure 2F–11 illustrates a typical wedge probe.) This approach requires use of two ports: the tested probe port and a second port located 90° from the tested probe port. Each port shall provide access to all the points within the wind tunnel test section where the velocity pressure cross-check, as specified in section 10.1.1, is conducted. The probe setup shall include establishing a reference yaw-null position on the probe sheath to serve as the location for installing the angle-measuring device. Physical design features of the DA, DAT, and wedge probes are relied on to determine the reference position. For the DA or DAT probe, this reference position can be determined by setting a digital inclinometer on the flat facet where the P_1 pressure port is located and then identifying the rotational position on the probe sheath where a second angle-measuring device would give the same angle reading. The reference position on a wedge probe shaft can be determined either geometrically or by placing a digital inclinometer on each side of the wedge and rotating the probe until equivalent readings are obtained. With the latter approach, the reference position is the rotational position on the probe sheath where an angle-measuring device would give a reading of 0°. After installing the angle-measuring device in the reference yaw-null position on the probe sheath, determine the yaw angle from the tested port. Repeat this measurement using the 90° offset port, which provides the pitch angle of flow. Determine the yaw and pitch angles at all the point(s) in the test section where the velocity pressure cross-check, as specified in section 10.1.1, is performed. This includes all the points in the wind tunnel calibration location and the point where the calibration pitot tube will be located. Perform this check at the highest and lowest velocities at which the probes will be calibrated. Record the values on a form similar to Table 2F–5. Each measured yaw and pitch angle shall be within ±3° of 0°. Exceeding the limits indicates unacceptable flow in the test section. Until the problem is corrected and acceptable flow is verified by repetition of this procedure, the wind tunnel shall not be used for calibration of probes. Include the results in the probe calibration report.

10.1.3 Wind tunnel audits.

10.1.3.1 Procedure. Upon the request of the Administrator, the owner or operator of a wind tunnel shall calibrate a 3–D audit probe in accordance with the procedures described in sections 10.3 through 10.6. The calibration shall be performed at two velocities and over a pitch angle range that encompasses the velocities and pitch angles typically used for this method at the facility. The resulting calibration data and curves shall be submitted to the Agency in an audit test report. These results shall be compared by the Agency to reference calibrations of the audit probe at the same velocity and pitch angle settings obtained at two different wind tunnels.

10.1.3.2 Acceptance criteria. The audited tunnel's calibration is acceptable if all of the following conditions are satisfied at each velocity and pitch setting for the reference calibration obtained from at least one of the wind tunnels. For pitch angle settings between −15° and +15°, no velocity calibration coefficient (i.e., F_2) may differ from the corresponding reference value by more than 3 percent. For pitch angle settings outside of this range (i.e., less than −15° and greater than +15°), no velocity calibration coefficient may differ by more than 5 percent from the corresponding reference value. If the acceptance criteria are not met, the audited wind

tunnel shall not be used to calibrate probes for use under this method until the problems are resolved and acceptable results are obtained upon completion of a subsequent audit.

10.2 Probe Inspection. Before each calibration of a 3–D probe, carefully examine the physical condition of the probe head. Particular attention shall be paid to the edges of the pressure ports and the surfaces surrounding these ports. Any dents, scratches, or asymmetries on the edges of the pressure ports and any scratches or indentations on the surfaces surrounding the pressure ports shall be noted because of the potential effect on the probe's pressure readings. If the probe has been previously calibrated, compare the current condition of the probe's pressure ports and surfaces to the results of the inspection performed during the probe's most recent wind tunnel calibration. Record the results of this inspection on a form and in diagrams similar to Table 2F–1. The information in Table 2F–1 will be used as the basis for comparison during the probe head inspections performed before each subsequent field use.

10.3 Pre-Calibration Procedures. Prior to calibration, a scribe line shall have been placed on the probe in accordance with section 10.4. The yaw angle and velocity calibration procedures shall not begin until the pretest requirements in sections 10.3.1 through 10.3.4 have been met.

10.3.1 Perform the horizontal straightness check described in section 8.2 on the probe assembly that will be calibrated in the wind tunnel.

10.3.2 Perform a leak check in accordance with section 8.4.

10.3.3 Except as noted in section 10.3.3.3, calibrate all differential pressure-measuring devices to be used in the probe calibrations, using the following procedures. At a minimum, calibrate these devices on each day that probe calibrations are performed.

10.3.3.1 Procedure. Before each wind tunnel use, all differential pressure-measuring devices shall be calibrated against the reference device specified in section 6.4.3 using a common pressure source. Perform the calibration at three reference pressures representing 30, 60, and 90 percent of the full-scale range of the pressure-measuring device being calibrated. For an inclined-vertical manometer, perform separate calibrations on the inclined and vertical portions of the measurement scale, considering each portion of the scale to be a separate full-scale range. [For example, for a manometer with a 0- to 2.5-cm H_2O (0- to 1-in. H_2O) inclined scale and a 2.5- to 12.7-cm H_2O (1- to 5-in. H_2O) vertical scale, calibrate the inclined portion at 7.6, 15.2, and 22.9 mm H_2O (0.3, 0.6, and 0.9 in. H_2O), and calibrate the vertical portion at 3.8, 7.6, and 11.4 cm H_2O (1.5, 3.0, and 4.5 in. H_2O).] Alternatively, for the vertical portion of the scale, use three evenly spaced reference pressures, one of which is equal to or higher than the highest differential pressure expected in field applications.

10.3.3.2 Acceptance criteria. At each pressure setting, the two pressure readings made using the reference device and the pressure-measuring device being calibrated shall agree to within ±2 percent of full scale of the device being calibrated or 0.5 mm H_2O (0.02 in. H_2O), whichever is less restrictive. For an inclined-vertical manometer, these requirements shall be met separately using the respective full-scale upper limits of the inclined and vertical portions of the scale. Differential pressure-measuring devices not meeting the #2 percent of full scale or 0.5 mm H_2O (0.02 in. H_2O) calibration requirement shall not be used.

10.3.3.3 Exceptions. Any precision manometer that meets the specifications for a reference device in section 6.4.3 and that is not used for field testing does not require calibration, but must be leveled and zeroed before each wind tunnel use. Any pressure device used exclusively for yaw nulling does not require calibration, but shall be checked for responsiveness to rotation of the probe prior to each wind tunnel use.

10.3.4 Calibrate digital inclinometers on each day of wind tunnel or field testing (prior to beginning testing) using the following procedures. Calibrate the inclinometer according to the manufacturer's calibration procedures. In addition, use a triangular block (illustrated in Figure 2F–12) with a known angle, θ independently determined using a protractor or equivalent device, between two adjacent sides to verify the inclinometer readings.

NOTE: If other angle-measuring devices meeting the provisions of section 6.2.3 are used in place of a digital inclinometer, comparable calibration procedures shall be performed on such devices.)

Secure the triangular block in a fixed position. Place the inclinometer on one side of the block (side A) to measure the angle of inclination (R_1). Repeat this measurement on the adjacent side of the block (side B) using the inclinometer to obtain a second angle reading (R_2). The difference of the sum of the two readings from 180° (i.e., $180° - R_1 - R_2$) shall be within ±2° of the known angle, Θ

10.4 Placement of Reference Scribe Line. Prior to the first calibration of a probe, a line shall be permanently inscribed on the main probe sheath to serve as a reference mark for determining yaw angles. Annex C in section 18 of this method gives a guideline for placement of the reference scribe line.

10.4.1 This reference scribe line shall meet the specifications in sections 6.1.6.1 and 6.1.6.3 of this method. To verify that the alignment specification in section 6.1.6.3 is

met, secure the probe in a horizontal position and measure the rotational angle of each scribe line and scribe line segment using an angle-measuring device that meets the specifications in section 6.2.1 or 6.2.3. For any scribe line that is longer than 30.5 cm (12 in.), check the line's rotational position at 30.5-cm (12-in.) intervals. For each line segment that is 30.5 cm (12 in.) or less in length, check the rotational position at the two endpoints of the segment. To meet the alignment specification in section 6.1.6.3, the minimum and maximum of all of the rotational angles that are measured along the full length of the main probe must not differ by more than 2°.

NOTE: A short reference scribe line segment [e.g., 15.2 cm (6 in.) or less in length] meeting the alignment specifications in section 6.1.6.3 is fully acceptable under this method. See section 18.1.1.1 of Annex A for an example of a probe marking procedure, suitable for use with a short reference scribe line.

10.4.2 The scribe line should be placed on the probe first and then its offset from the yaw-null position established (as specified in section 10.5). The rotational position of the reference scribe line relative to the yaw-null position of the probe, as determined by the yaw angle calibration procedure in section 10.5, is defined as the reference scribe line rotational offset, R_{SLO}. The reference scribe line rotational offset shall be recorded and retained as part of the probe's calibration record.

10.4.3 Scribe line for automated probes. A scribe line may not be necessary for an automated probe system if a reference rotational position of the probe is built into the probe system design. For such systems, a ''flat'' (or comparable, clearly identifiable physical characteristic) should be provided on the probe casing or flange plate to ensure that the reference position of the probe assembly remains in a vertical or horizontal position. The rotational offset of the flat (or comparable, clearly identifiable physical characteristic) needed to orient the reference position of the probe assembly shall be recorded and maintained as part of the automated probe system's specifications.

10.5 Yaw Angle Calibration Procedure. For each probe used to measure yaw angles with this method, a calibration procedure shall be performed in a wind tunnel meeting the specifications in section 10.1 to determine the rotational position of the reference scribe line relative to the probe's yaw-null position. This procedure shall be performed on the main probe with all devices that will be attached to the main probe in the field [such as thermocouples or resistance temperature detectors (RTDs)] that may affect the flow around the probe head. Probe shaft extensions that do not affect flow around the probe head need not be attached during calibration. At a minimum, this procedure shall include the following steps.

10.5.1 Align and lock the angle-measuring device on the reference scribe line. If a marking procedure (such as that described in section 18.1.1.1) is used, align the angle-measuring device on a mark within ±1° of the rotational position of the reference scribe line. Lock the angle-measuring device onto the probe sheath at this position.

10.5.2 Zero the pressure-measuring device used for yaw nulling.

10.5.3 Insert the probe assembly into the wind tunnel through the entry port, positioning the probe's impact port at the calibration location. Check the responsiveness of the pressure-measurement device to probe rotation, taking corrective action if the response is unacceptable.

10.5.4 Ensure that the probe is in a horizontal position, using a carpenter's level.

10.5.5 Rotate the probe either clockwise or counterclockwise until a yaw null ($P_2 = P_3$) is obtained.

10.5.6 Use the reading displayed by the angle-measuring device at the yaw-null position to determine the magnitude of the reference scribe line rotational offset, R_{SLO}, as defined in section 3.15. Annex D in section 18 of this method provides a recommended procedure for determining the magnitude of R_{SLO} with a digital inclinometer and a second procedure for determining the magnitude of R_{SLO} with a protractor wheel and pointer device. Table 2F–6 presents an example data form and Table 2F–7 is a look-up table with the recommended procedure. Procedures other than those recommended in Annex D in section 18 may be used, if they can determine R_{SLO} to within ±1° and are explained in detail in the field test report. The algebraic sign of R_{SLO} will either be positive, if the rotational position of the reference scribe line (as viewed from the ''tail'' end of the probe) is clockwise, or negative, if counterclockwise with respect to the probe's yaw-null position. (This is illustrated in Figure 2F–13.)

10.5.7 The steps in sections 10.5.3 through 10.5.6 shall be performed twice at each of the velocities at which the probe will be calibrated (in accordance with section 10.6). Record the values of R_{SLO}.

10.5.8 The average of all of the R_{SLO} values shall be documented as the reference scribe line rotational offset for the probe.

10.5.9 Use of reference scribe line offset. The reference scribe line rotational offset shall be used to determine the yaw angle of flow in accordance with section 8.9.4.

10.6 Pitch Angle and Velocity Pressure Calibrations. Use the procedures in sections 10.6.1 through 10.6.16 to generate an appropriate set (or sets) of pitch angle and velocity pressure calibration curves for each probe. The calibration procedure shall be

performed on the main probe and all devices that will be attached to the main probe in the field (e.g., thermocouple or RTDs) that may affect the flow around the probe head. Probe shaft extensions that do not affect flow around the probe head need not be attached during calibration. (Note: If a sampling nozzle is part of the assembly, a wind tunnel demonstration shall be performed that shows the probe's ability to measure velocity and yaw null is not impaired when the nozzle is drawing a sample.) The calibration procedure involves generating two calibration curves, F_1 versus pitch angle and F_2 versus pitch angle. To generate these two curves, F_1 and F_2 shall be derived using Equations 2F–1 and 2F–2, below. Table 2F–8 provides an example wind tunnel calibration data sheet, used to log the measurements needed to derive these two calibration curves.

10.6.1 Calibration velocities. The tester may calibrate the probe at two nominal wind tunnel velocity settings of 18.3 m/sec and 27.4 m/sec (60 ft/sec and 90 ft/sec) and average the results of these calibrations, as described in section 10.6.16.1, in order to generate a set of calibration curves. If this option is selected, this single set of calibration curves may be used for all field applications over the entire velocity range allowed by the method. Alternatively, the tester may customize the probe calibration for a particular field test application (or for a series of applications), based on the expected average velocity(ies) at the test site(s). If this option is selected, generate each set of calibration curves by calibrating the probe at two nominal wind tunnel velocity settings, at least one of which is greater than or equal to the expected average velocity(ies) for the field application(s), and average the results as described in section 10.6.16.1. Whichever calibration option is selected, the probe calibration coefficients (F_2 values) obtained at the two nominal calibration velocities shall, for the same pitch angle setting, meet the conditions specified in section 10.6.16.

10.6.2 Pitch angle calibration curve (F_1 versus pitch angle). The pitch angle calibration involves generating a calibration curve of calculated F_1 values versus tested pitch angles, where F_1 is the ratio of the pitch pressure to the velocity pressure, i.e.,

$$F_1 = \frac{(P_4 - P_5)}{(P_1 - P_2)} \qquad \text{Eq. 2F-1}$$

See Figure 2F–14 for an example F_1 versus pitch angle calibration curve.

10.6.3 Velocity calibration curve (F_2 versus pitch angle). The velocity calibration involves generating a calibration curve of the 3–D probe's F_2 coefficient against the tested pitch angles, where

$$F_2 = C_p \sqrt{\frac{\Delta P_{std}}{(P_1 - P_2)}} \qquad \text{Eq. 2F-2}$$

and

C_p = calibration pitot tube coefficient, and
ΔP_{std} = velocity pressure from the calibration pitot tube.

See Figure 2F–15 for an example F_2 versus pitch angle calibration curve.

10.6.4 Connect the tested probe and calibration pitot probe to their respective pressure-measuring devices. Zero the pressure-measuring devices. Inspect and leak-check all pitot lines; repair or replace, if necessary. Turn on the fan, and allow the wind tunnel air flow to stabilize at the first of the two selected nominal velocity settings.

10.6.5 Position the calibration pitot tube at its measurement location (determined as outlined in section 6.11.4.3), and align the tube so that its tip is pointed directly into the flow. Ensure that the entry port surrounding the tube is properly sealed. The calibration pitot tube may either remain in the wind tunnel throughout the calibration, or be removed from the wind tunnel while measurements are taken with the probe being calibrated.

10.6.6 Set up the pitch protractor plate on the tested probe's entry port to establish the pitch angle positions of the probe to within ±2°.

10.6.7 Check the zero setting of each pressure-measuring device.

10.6.8 Insert the tested probe into the wind tunnel and align it so that its P_1 pressure port is pointed directly into the flow and is positioned within the calibration location (as defined in section 3.20). Secure the probe at the 0° pitch angle position. Ensure that the entry port surrounding the probe is properly sealed.

10.6.9 Read the differential pressure from the calibration pitot tube (ΔP_{std}), and record its value. Read the barometric pressure to within ±2.5 mm Hg (±0.1 in. Hg) and the temperature in the wind tunnel to within 0.6°C (1°F). Record these values on a data form similar to Table 2F–8.

10.6.10 After the tested probe's differential pressure gauges have had sufficient time to stabilize, yaw null the probe, then obtain differential pressure readings for (P_1–P_2) and (P_4–P_5). Record the yaw angle and differential pressure readings. After taking these readings, ensure that the tested probe has remained at the yaw-null position.

10.6.11 Either take paired differential pressure measurements with both the calibration pitot tube and tested probe (according to sections 10.6.9 and 10.6.10) or take readings only with the tested probe (according to section 10.6.10) in 5° increments over the pitch-angle range for which the probe is

to be calibrated. The calibration pitch-angle range shall be symmetric around 0° and shall exceed the largest pitch angle expected in the field by 5°. At a minimum, probes shall be calibrated over the range of −15° to +15°. If paired calibration pitot tube and tested probe measurements are not taken at each pitch angle setting, the differential pressure from the calibration pitot tube shall be read, at a minimum, before taking the tested probe's differential pressure reading at the first pitch angle setting and after taking the tested probe's differential pressure readings at the last pitch angle setting in each replicate.

10.6.12 Perform a second replicate of the procedures in sections 10.6.5 through 10.6.11 at the same nominal velocity setting.

10.6.13 For each replicate, calculate the F_1 and F_2 values at each pitch angle. At each pitch angle, calculate the percent difference between the two F_2 values using Equation 2F–3.

$$\%\text{Diff} = \frac{F_2^{max} - F_2^{min}}{F_2^{min}} \times 100\% \qquad \text{Eq. 2F-3}$$

If the percent difference is less than or equal to 2 percent, calculate an average F_1 value and an average F_2 value at that pitch angle. If the percent difference is greater than 2 percent and less than or equal to 5 percent, perform a third repetition at that angle and calculate an average F_1 value and an average F_2 value using all three repetitions. If the percent difference is greater than 5 percent, perform four additional repetitions at that angle and calculate an average F_1 value and an average F_2 value using all six repetitions. When additional repetitions are required at any pitch angle, move the probe by at least 5° and then return to the specified pitch angle before taking the next measurement. Record the average values on a form similar to Table 2F–9.

10.6.14 Repeat the calibration procedures in sections 10.6.5 through 10.6.13 at the second selected nominal wind tunnel velocity setting.

10.6.15 Velocity drift check. The following check shall be performed, except when paired calibration pitot tube and tested probe pressure measurements are taken at each pitch angle setting. At each velocity setting, calculate the percent difference between consecutive differential pressure measurements made with the calibration pitot tube. If a measurement differs from the previous measurement by more than 2 percent or 0.25 mm H_2O (0.01 in. H_2O), whichever is less restrictive, the calibration data collected between these calibration pitot tube measurements may not be used, and the measurements shall be repeated.

10.6.16 Compare the averaged F_2 coefficients obtained from the calibrations at the two selected nominal velocities, as follows. At each pitch angle setting, use Equation 2F–3 to calculate the difference between the corresponding average F_2 values at the two calibration velocities. At each pitch angle in the −15° to +15° range, the percent difference between the average F_2 values shall not exceed 3.0 percent. For pitch angles outside this range (i.e., less than −15°0 and greater than +15°), the percent difference shall not exceed 5.0 percent.

10.6.16.1 If the applicable specification in section 10.6.16 is met at each pitch angle setting, average the results obtained at the two nominal calibration velocities to produce a calibration record of F_1 and F_2 at each pitch angle tested. Record these values on a form similar to Table 2F–9. From these values, generate one calibration curve representing F_1 versus pitch angle and a second curve representing F_2 versus pitch angle. Computer spreadsheet programs may be used to graph the calibration data and to develop polynomial equations that can be used to calculate pitch angles and axial velocities.

10.6.16.2 If the applicable specification in section 10.6.16 is exceeded at any pitch angle setting, the probe shall not be used unless: (1) the calibration is repeated at that pitch angle and acceptable results are obtained or (2) values of F_1 and F_2 are obtained at two nominal velocities for which the specifications in section 10.6.16 are met across the entire pitch angle range.

10.7 Recalibration. Recalibrate the probe using the procedures in section 10 either within 12 months of its first field use after its most recent calibration or after 10 field tests (as defined in section 3.4), whichever occurs later. In addition, whenever there is visible damage to the 3-D head, the probe shall be recalibrated before it is used again.

10.8 Calibration of pressure-measuring devices used in field tests. Before its initial use in a field test, calibrate each pressure-measuring device (except those used exclusively for yaw nulling) using the three-point calibration procedure described in section 10.3.3. The device shall be recalibrated according to the procedure in section 10.3.3 no later than 90 days after its first field use following its most recent calibration. At the discretion of the tester, more frequent calibrations (e.g., after a field test) may be performed. No adjustments, other than adjustments to the zero setting, shall be made to the device between calibrations.

10.8.1 Post-test calibration check. A single-point calibration check shall be performed on each pressure-measuring device after completion of each field test. At the discretion of the tester, more frequent single-point calibration checks (e.g., after one or more field test runs) may be performed. It is recommended that the post-test check be performed before leaving the field test site. The check shall be performed at a pressure

between 50 and 90 percent of full scale by taking a common pressure reading with the tested device and a reference pressure-measuring device (as described in section 6.4.4) or by challenging the tested device with a reference pressure source (as described in section 6.4.4) or by performing an equivalent check using a reference device approved by the Administrator.

10.8.2 Acceptance criterion. At the selected pressure setting, the pressure readings made using the reference device and the tested device shall agree to within 3 percent of full scale of the tested device or 0.8 mm H_2O (0.03 in. H_2O), whichever is less restrictive. If this specification is met, the test data collected during the field test are valid. If the specification is not met, all test data collected since the last successful calibration or calibration check are invalid and shall be repeated using a pressure-measuring device with a current, valid calibration. Any device that fails the calibration check shall not be used in a field test until a successful recalibration is performed according to the procedures in section 10.3.3.

10.9 Temperature Gauges. Same as Method 2, section 4.3. The alternative thermocouple calibration procedures outlined in Emission Measurement Center (EMC) Approved Alternative Method (ALT–011) ''Alternative Method 2 Thermocouple Calibration Procedure'' may be performed. Temperature gauges shall be calibrated no more than 30 days prior to the start of a field test or series of field tests and recalibrated no more than 30 days after completion of a field test or series of field tests.

10.10 Barometer. Same as Method 2, section 4.4. The barometer shall be calibrated no more than 30 days prior to the start of a field test or series of field tests.

11.0 Analytical Procedure

Sample collection and analysis are concurrent for this method (see section 8.0).

12.0 Data Analysis and Calculations

These calculations use the measured yaw angle, derived pitch angle, and the differential pressure and temperature measurements at individual traverse points to derive the axial flue gas velocity ($v_{a(i)}$) at each of those points. The axial velocity values at all traverse points that comprise a full stack or duct traverse are then averaged to obtain the average axial flue gas velocity ($v_{a\ (avg)}$). Round off figures only in the final calculation of reported values.

12.1 Nomenclature

A = Cross-sectional area of stack or duct, m^2 (ft^2).

B_{ws} = Water vapor in the gas stream (from Method 4 or alternative), proportion by volume.

K_p Conversion factor (a constant),

$$34.97\frac{m}{sec}\left[\frac{(g/g\text{-}mole)(mm\ Hg)}{(^\circ K)(mm\ H_2O)}\right]^{1/2}$$

for the metric system, and

$$85.49\frac{ft}{sec}\left[\frac{(lb/lb\text{-}mole)(in.\ Hg)}{(^\circ R)(in.\ H_2O)}\right]^{1/2}$$

for the English system.

M_d = Molecular weight of stack or duct gas, dry basis (see section 8.13), g/g-mole (lb/lb-mole).

M_s = Molecular weight of stack or duct gas, wet basis, g/g-mole (lb/lb-mole).

$$M_s = M_d(1 - B_{ws}) + 18.0B_{ws} \qquad \text{Eq. 2F-4}$$

P_{bar} = Barometric pressure at measurement site, mm Hg (in. Hg).

P_g = Stack or duct static pressure, mm H_2O (in. H_2O).

P_s = Absolute stack or duct pressure, mm Hg (in. Hg),

$$P_s = P_{bar} + \frac{P_g}{13.6} \qquad \text{Eq. 2F-5}$$

P_{std} = Standard absolute pressure, 760 mm Hg (29.92 in. Hg).

13.6 = Conversion from mm H_2O (in. H_2O) to mm Hg (in. Hg).

Q_{sd} = Average dry-basis volumetric stack or duct gas flow rate corrected to standard conditions, dscm/hr (dscf/hr).

Q_{sw} = Average wet-basis volumetric stack or duct gas flow rate corrected to standard conditions, wscm/hr (wscf/hr).

$T_{s(avg)}$ = Average absolute stack or duct gas temperature across all traverse points.

$t_{s(i)}$ = Stack or duct gas temperature, C (F), at traverse point i.

$T_{s(i)}$ = Absolute stack or duct gas temperature, K (R), at traverse point i,

$$T_{s(i)} = 273 + t_{s(i)} \qquad \text{Eq. 2F-6}$$

for the metric system, and

$$T_{s(i)} = 460 + t_{s(i)} \qquad \text{Eq. 2F-7}$$

for the English system.

T_{std} = Standard absolute temperature, 293°K (528°R).

$F_{1(i)}$ = Pitch angle ratio, applicable at traverse point i, dimensionless.

$F_{2(i)}$ = 3-D probe velocity calibration coefficient, applicable at traverse point i, dimensionless.

$(P_4\text{-}P_5)_i$ = Pitch differential pressure of stack or duct gas flow, mm H_2O (in. H_2O), at traverse point i.

$(P_1\text{-}P_2)_i$ = Velocity head (differential pressure) of stack or duct gas flow, mm H_2O (in. H_2O), at traverse point i.

$v_{a(i)}$ = Reported stack or duct gas axial velocity, m/sec (ft/sec), at traverse point i.

$v_{a(avg)}$ = Average stack or duct gas axial velocity, m/sec (ft/sec), across all traverse points.

3,600 = Conversion factor, sec/hr.

18.0 = Molecular weight of water, g/g-mole (lb/lb-mole).

$\theta_{y(i)}$ = Yaw angle, degrees, at traverse point i.

$\theta_{p(i)}$ = Pitch angle, degrees, at traverse point i.

n = Number of traverse points.

12.2 Traverse Point Velocity Calculations. Perform the following calculations from the measurements obtained at each traverse point.

12.2.1 Selection of calibration curves. Select calibration curves as described in section 10.6.1.

12.2.2 Traverse point pitch angle ratio. Use Equation 2F–1, as described in section 10.6.2, to calculate the pitch angle ratio, $F_{1(i)}$, at each traverse point.

12.2.3 Pitch angle. Use the pitch angle ratio, $F_{1(i)}$, to derive the pitch angle, $\theta_{p(i)}$, at traverse point i from the F_1 versus pitch angle calibration curve generated under section 10.6.16.1.

12.2.4 Velocity calibration coefficient. Use the pitch angle, $\theta_{p(i)}$, to obtain the probe velocity calibration coefficient, $F_{2(i)}$, at traverse point i from the ''velocity pressure calibration curve,'' i.e., the F_2 versus pitch angle calibration curve generated under section 10.6.16.1.

12.2.5 Axial velocity. Use the following equation to calculate the axial velocity, $v_{a(i)}$, from the differential pressure $(P_1\text{-}P_2)_i$ and yaw angle, $\theta_{y(i)}$, measured at traverse point i and the previously calculated values for the velocity calibration coefficient, $F_{2(i)}$, absolute stack or duct standard temperature, $T_{s(i)}$, absolute stack or duct pressure, P_s, molecular weight, M_s, and pitch angle, ''$\theta_{p(i)}$.

$$v_{a(i)} = K_p F_{2(i)} \sqrt{\frac{(P_1 - P_2)_i T_{s(i)}}{P_s M_s}} \left(\cos\theta_{y(i)}\right)\left(\cos\theta_{p(i)}\right) \qquad \text{Eq. 2F-8}$$

12.2.6 Handling multiple measurements at a traverse point. For pressure or temperature devices that take multiple measurements at a traverse point, the multiple measurements (or where applicable, their square roots) may first be averaged and the resulting average values used in the equations above. Alternatively, the individual measurements may be used in the equations above and the resulting multiple calculated values may then be averaged to obtain a single traverse point value. With either approach, all of the individual measurements recorded at a traverse point must be used in calculating the applicable traverse point value.

12.3 Average Axial Velocity in Stack or Duct. Use the reported traverse point axial velocity in the following equation.

$$v_{a(avg)} = \frac{\sum_{i=1}^{n} v_{a(i)}}{n} \qquad \text{Eq. 2F-9}$$

12.4 Acceptability of Results. The test results are acceptable and the calculated value of $v_{a(avg)}$ may be reported as the average axial velocity for the test run if the conditions in either section 12.4.1 or 12.4.2 are met.

12.4.1 The calibration curves were generated at nominal velocities of 18.3 m/sec and 27.4 m/sec (60 ft/sec and 90 ft/sec).

12.4.2 The calibration curves were generated at nominal velocities other than 18.3 m/sec and 27.4 m/sec (60 ft/sec and 90 ft/sec), and the value of $v_{a(avg)}$ obtained using Equation 2F–9 is less than or equal to at least one of the nominal velocities used to derive the F_1 and F_2 calibration curves.

12.4.3 If the conditions in neither section 12.4.1 nor section 12.4.2 are met, the test results obtained in Equation 2F–9 are not acceptable, and the steps in sections 12.2 and 12.3 must be repeated using a set of F_1 and F_2 calibration curves that satisfies the conditions specified in section 12.4.1 or 12.4.2.

12.5 Average Gas Wet Volumetric Flow Rate in Stack or Duct. Use the following equation to compute the average volumetric flow rate on a wet basis.

$$Q_{sw} = 3{,}600\left(v_{a(avg)}\right)(A)\left(\frac{T_{std}}{T_{s(avg)}}\right)\left(\frac{P_s}{P_{std}}\right) \qquad \text{Eq. 2F-10}$$

12.6 Average Gas Dry Volumetric Flow Rate in Stack or Duct. Use the following equation to compute the average volumetric flow rate on a dry basis.

$$Q_{sd} = 3{,}600\left(1 - B_{ws}\right)\left(v_{a(avg)}\right)(A)\left(\frac{T_{std}}{T_{s(avg)}}\right)\left(\frac{P_s}{P_{std}}\right) \qquad \text{Eq. 2F-11}$$

13.0 Method Performance. [Reserved]

14.0 Pollution Prevention. [Reserved]

15.0 Waste Management. [Reserved]

16.0 Reporting

16.1 Field Test Reports. Field test reports shall be submitted to the Agency according to applicable regulatory requirements. Field test reports should, at a minimum, include the following elements.

16.1.1 Description of the source. This should include the name and location of the test site, descriptions of the process tested, a description of the combustion source, an accurate diagram of stack or duct cross-sectional area at the test site showing the dimensions of the stack or duct, the location of the test ports, and traverse point locations and identification numbers or codes. It should also include a description and diagram of the stack or duct layout, showing the distance of the test location from the nearest upstream and downstream disturbances and all structural elements (including breachings, baffles, fans, straighteners, etc.) affecting the flow pattern. If the source and test location descriptions have been previously submitted to the Agency in a document (e.g., a monitoring plan or test plan), referencing the document in lieu of including this information in the field test report is acceptable.

16.1.2 Field test procedures. These should include a description of test equipment and test procedures. Testing conventions, such as traverse point numbering and measurement sequence (e.g., sampling from center to wall, or wall to center), should be clearly stated. Test port identification and directional reference for each test port should be included on the appropriate field test data sheets.

16.1.3 Field test data.

16.1.3.1 Summary of results. This summary should include the dates and times of testing and the average axial gas velocity and the average flue gas volumetric flow results for each run and tested condition.

16.1.3.2 Test data. The following values for each traverse point should be recorded and reported:

(a) P_1-P_2 and P_4-P_5 differential pressures

(b) Stack or duct gas temperature at traverse point i ($t_{s(i)}$)

(c) Absolute stack or duct gas temperature at traverse point i ($T_{s(i)}$)

(d) Yaw angle at each traverse point i ($\theta_{y(i)}$)

(e) Pitch angle at each traverse point i ($\theta_{p(i)}$)

(f) Stack or duct gas axial velocity at traverse point i ($v_{a(i)}$)

16.1.3.3 The following values should be reported once per run:

(a) Water vapor in the gas stream (from Method 4 or alternative), proportion by volume (B_{ws}), measured at the frequency specified in the applicable regulation

(b) Molecular weight of stack or duct gas, dry basis (M_d)

(c) Molecular weight of stack or duct gas, wet basis (M_s)

(d) Stack or duct static pressure (P_g)

(e) Absolute stack or duct pressure (P_s)

(f) Carbon dioxide concentration in the flue gas, dry basis ($\%_d$ CO_2)

(g) Oxygen concentration in the flue gas, dry basis ($\%_d$ O_2)

(h) Average axial stack or duct gas velocity ($v_{a(avg)}$) across all traverse points

(i) Gas volumetric flow rate corrected to standard conditions, dry or wet basis as required by the applicable regulation (Q_{sd} or Q_{sw})

16.1.3.4 The following should be reported once per complete set of test runs:

(a) Cross-sectional area of stack or duct at the test location (A)

(b) Measurement system response time (sec)

(c) Barometric pressure at measurement site (P_{bar})

16.1.4 Calibration data. The field test report should include calibration data for all

probes and test equipment used in the field test. At a minimum, the probe calibration data reported to the Agency should include the following:

(a) Date of calibration

(b) Probe type

(c) Probe identification number(s) or code(s)

(d) Probe inspection sheets

(e) Pressure measurements and intermediate calculations of F_1 and F_2 at each pitch angle used to obtain calibration curves in accordance with section 10.6 of this method

(f) Calibration curves (in graphic or equation format) obtained in accordance with sections 10.6.11 of this method

(g) Description and diagram of wind tunnel used for the calibration, including dimensions of cross-sectional area and position and size of the test section

(h) Documentation of wind tunnel qualification tests performed in accordance with section 10.1 of this method

16.1.5 Quality Assurance. Specific quality assurance and quality control procedures used during the test should be described.

17.0 Bibliography

(1) 40 CFR Part 60, Appendix A, Method 1—Sample and velocity traverses for stationary sources.

(2) 40 CFR Part 60, Appendix A, Method 2H—Determination of stack gas velocity taking into account velocity decay near the stack wall.

(3) 40 CFR Part 60, Appendix A, Method 2—Determination of stack gas velocity and volumetric flow rate (Type S pitot tube).

(4) 40 CFR Part 60, Appendix A, Method 3—Gas analysis for carbon dioxide, oxygen, excess air, and dry molecular weight.

(5) 40 CFR Part 60, Appendix A, Method 3A—Determination of oxygen and carbon dioxide concentrations in emissions from stationary sources (instrumental analyzer procedure).

(6) 40 CFR Part 60, Appendix A, Method 4—Determination of moisture content in stack gases.

(7) Emission Measurement Center (EMC) Approved Alternative Method (ALT–011) ''Alternative Method 2 Thermocouple Calibration Procedure.''

(8) Electric Power Research Institute, Interim Report EPRI TR–106698, ''Flue Gas Flow Rate Measurement Errors,'' June 1996.

(9) Electric Power Research Institute, Final Report EPRI TR–108110, ''Evaluation of Heat Rate Discrepancy from Continuous Emission Monitoring Systems,'' August 1997.

(10) Fossil Energy Research Corporation, Final Report, ''Velocity Probe Tests in Nonaxial Flow Fields,'' November 1998, Prepared for the U.S. Environmental Protection Agency.

(11) Fossil Energy Research Corporation, ''Additional Swirl Tunnel Tests: E–DAT and T–DAT Probes,'' February 24, 1999, Technical Memorandum Prepared for U.S. Environmental Protection Agency, P.O. No. 7W–1193–NALX.

(12) Massachusetts Institute of Technology, Report WBWT–TR–1317, ''Calibration of Eight Wind Speed Probes Over a Reynolds Number Range of 46,000 to 725,000 Per Foot, Text and Summary Plots,'' Plus appendices, October 15, 1998, Prepared for The Cadmus Group, Inc.

(13) National Institute of Standards and Technology, Special Publication 250, ''NIST Calibration Services Users Guide 1991,'' Revised October 1991, U.S. Department of Commerce, p. 2.

(14) National Institute of Standards and Technology, 1998, ''Report of Special Test of Air Speed Instrumentation, Four Prandtl Probes, Four S–Type Probes, Four French Probes, Four Modified Kiel Probes,'' Prepared for the U.S. Environmental Protection Agency under IAG #DW13938432–01–0.

(15) National Institute of Standards and Technology, 1998, ''Report of Special Test of Air Speed Instrumentation, Five Autoprobes,'' Prepared for the U.S. Environmental Protection Agency under IAG #DW13938432–01–0.

(16) National Institute of Standards and Technology, 1998, ''Report of Special Test of Air Speed Instrumentation, Eight Spherical Probes,'' Prepared for the U.S. Environmental Protection Agency under IAG #DW13938432–01–0.

(17) National Institute of Standards and Technology, 1998, ''Report of Special Test of Air Speed Instrumentation, Four DAT Probes,'' Prepared for the U.S. Environmental Protection Agency under IAG #DW13938432–01–0.

(18) Norfleet, S.K., ''An Evaluation of Wall Effects on Stack Flow Velocities and Related Overestimation Bias in EPA's Stack Flow Reference Methods,'' EPRI CEMS User's Group Meeting, New Orleans, Louisiana, May 13–15, 1998.

(19) Page, J.J., E.A. Potts, and R.T. Shigehara, ''3–D Pitot Tube Calibration Study,'' EPA Contract No. 68–D1–0009, Work Assignment No. I–121, March 11, 1993.

(20) Shigehara, R.T., W.F. Todd, and W.S. Smith, ''Significance of Errors in Stack Sampling Measurements,'' Presented at the Annual Meeting of the Air Pollution Control Association, St. Louis, Missouri, June 14–19, 1970.

(21) The Cadmus Group, Inc., May 1999, ''EPA Flow Reference Method Testing and Analysis: Findings Report,'' EPA/430–R–99–009.

(22) The Cadmus Group, Inc., 1998, ''EPA Flow Reference Method Testing and Analysis: Data Report, Texas Utilities, DeCordova Steam Electric Station, Volume

I: Test Description and Appendix A (Data Distribution Package),'' EPA/430–R–98–015a.

(23) The Cadmus Group, Inc., 1998, ''EPA Flow Reference Method Testing and Analysis: Data Report, Texas Utilities, Lake Hubbard Steam Electric Station, Volume I: Test Description and Appendix A (Data Distribution Package),'' EPA/430–R–98–017a.

(24) The Cadmus Group, Inc., 1998, ''EPA Flow Reference Method Testing and Analysis: Data Report, Pennsylvania Electric Co., G.P.U. Genco Homer City Station: Unit 1, Volume I: Test Description and Appendix A (Data Distribution Package),'' EPA/430–R–98–018a.

(25) The Cadmus Group, Inc., 1997, ''EPA Flow Reference Method Testing and Analysis: Wind Tunnel Experimental Results,'' EPA/430–R–97–013.

18.0 Annexes

Annex A, C, and D describe recommended procedures for meeting certain provisions in sections 8.3, 10.4, and 10.5 of this method. Annex B describes procedures to be followed when using the protractor wheel and pointer assembly to measure yaw angles, as provided under section 8.9.1.

18.1 Annex A—Rotational Position Check. The following are recommended procedures that may be used to satisfy the rotational position check requirements of section 8.3 of this method and to determine the angle-measuring device rotational offset R_{ADO}.

18.1.1 Rotational position check with probe outside stack. Where physical constraints at the sampling location allow full assembly of the probe outside the stack and insertion into the test port, the following procedures should be performed before the start of testing. Two angle-measuring devices that meet the specifications in section 6.2.1 or 6.2.3 are required for the rotational position check. An angle measuring device whose position can be independently adjusted (e.g., by means of a set screw) after being locked into position on the probe sheath shall not be used for this check unless the independent adjustment is set so that the device performs exactly like a device without the capability for independent adjustment. That is, when aligned on the probe such a device must give the same reading as a device that does not have the capability of being independently adjusted. With the fully assembled probe (including probe shaft extensions, if any) secured in a horizontal position, affix one yaw angle-measuring device to the probe sheath and lock it into position on the reference scribe line specified in section 6.1.6.1. Position the second angle-measuring device using the procedure in section 18.1.1.1 or 18.1.1.2.

18.1.1.1 Marking procedure. The procedures in this section should be performed at each location on the fully assembled probe where the yaw angle-measuring device will be mounted during the velocity traverse. Place the second yaw angle-measuring device on the main probe sheath (or extension) at the position where a yaw angle will be measured during the velocity traverse. Adjust the position of the second angle-measuring device until it indicates the same angle (±1°) as the reference device, and affix the second device to the probe sheath (or extension). Record the angles indicated by the two angle-measuring devices on a form similar to Table 2F–2. In this position, the second angle-measuring device is considered to be properly positioned for yaw angle measurement. Make a mark, no wider than 1.6 mm (1/16 in.), on the probe sheath (or extension), such that the yaw angle-measuring device can be re-affixed at this same properly aligned position during the velocity traverse.

18.1.1.2 Procedure for probe extensions with scribe lines. If, during a velocity traverse the angle-measuring device will be affixed to a probe extension having a scribe line as specified in section 6.1.6.2, the following procedure may be used to align the extension's scribe line with the reference scribe line instead of marking the extension as described in section 18.1.1.1. Attach the probe extension to the main probe. Align and lock the second angle-measuring device on the probe extension's scribe line. Then, rotate the extension until both measuring devices indicate the same angle (±1°). Lock the extension at this rotational position. Record the angles indicated by the two angle-measuring devices on a form similar to Table 2F–2. An angle-measuring device may be aligned at any position on this scribe line during the velocity traverse, if the scribe line meets the alignment specification in section 6.1.6.3.

18.1.1.3 Post-test rotational position check. If the fully assembled probe includes one or more extensions, the following check should be performed immediately after the completion of a velocity traverse. At the discretion of the tester, additional checks may be conducted after completion of testing at any sample port. Without altering the alignment of any of the components of the probe assembly used in the velocity traverse, secure the fully assembled probe in a horizontal position. Affix an angle-measuring device at the reference scribe line specified in section 6.1.6.1. Use the other angle-measuring device to check the angle at each location where the device was checked prior to testing. Record the readings from the two angle-measuring devices.

18.1.2 Rotational position check with probe in stack. This section applies only to probes that, due to physical constraints, cannot be inserted into the test port as fully assembled with all necessary extensions needed to reach the inner-most traverse point(s).

18.1.2.1 Perform the out-of-stack procedure in section 18.1.1 on the main probe and

any attached extensions that will be initially inserted into the test port.

18.1.2.2 Use the following procedures to perform additional rotational position check(s) with the probe in the stack, each time a probe extension is added. Two angle-measuring devices are required. The first of these is the device that was used to measure yaw angles at the preceding traverse point, left in its properly aligned measurement position. The second angle-measuring device is positioned on the added probe extension. Use the applicable procedures in section 18.1.1.1 or 18.1.1.2 to align, adjust, lock, and mark (if necessary) the position of the second angle-measuring device to within ±1° of the first device. Record the readings of the two devices on a form similar to Table 2F–2.

18.1.2.3 The procedure in section 18.1.2.2 should be performed at the first port where measurements are taken. The procedure should be repeated each time a probe extension is re-attached at a subsequent port, unless the probe extensions are designed to be locked into a mechanically fixed rotational position (e.g., through use of interlocking grooves), which can be reproduced from port to port as specified in section 8.3.5.2.

18.2 Annex B—Angle Measurement Protocol for Protractor Wheel and Pointer Device. The following procedure shall be used when a protractor wheel and pointer assembly, such as the one described in section 6.2.2 and illustrated in Figure 2F–7 is used to measure the yaw angle of flow. With each move to a new traverse point, unlock, re-align, and re-lock the probe, angle-pointer collar, and protractor wheel to each other. At each such move, particular attention is required to ensure that the scribe line on the angle pointer collar is either aligned with the reference scribe line on the main probe sheath or is at the rotational offset position established under section 8.3.1. The procedure consists of the following steps:

18.2.1 Affix a protractor wheel to the entry port for the test probe in the stack or duct.

18.2.2 Orient the protractor wheel so that the 0° mark corresponds to the longitudinal axis of the stack or duct. For stacks, vertical ducts, or ports on the side of horizontal ducts, use a digital inclinometer meeting the specifications in section 6.2.1 to locate the 0° orientation. For ports on the top or bottom of horizontal ducts, identify the longitudinal axis at each test port and permanently mark the duct to indicate the 0° orientation. Once the protractor wheel is properly aligned, lock it into position on the test port.

18.2.3 Move the pointer assembly along the probe sheath to the position needed to take measurements at the first traverse point. Align the scribe line on the pointer collar with the reference scribe line or at the rotational offset position established under section 8.3.1. Maintaining this rotational alignment, lock the pointer device onto the probe sheath. Insert the probe into the entry port to the depth needed to take measurements at the first traverse point.

18.2.4 Perform the yaw angle determination as specified in sections 8.9.3 and 8.9.4 and record the angle as shown by the pointer on the protractor wheel. Then, take velocity pressure and temperature measurements in accordance with the procedure in section 8.9.5. Perform the alignment check described in section 8.9.6.

18.2.5 After taking velocity pressure measurements at that traverse point, unlock the probe from the collar and slide the probe through the collar to the depth needed to reach the next traverse point.

18.2.6 Align the scribe line on the pointer collar with the reference scribe line on the main probe or at the rotational offset position established under section 8.3.1. Lock the collar onto the probe.

18.2.7 Repeat the steps in sections 18.2.4 through 18.2.6 at the remaining traverse points accessed from the current stack or duct entry port.

18.2.8 After completing the measurement at the last traverse point accessed from a port, verify that the orientation of the protractor wheel on the test port has not changed over the course of the traverse at that port. For stacks, vertical ducts, or ports on the side of horizontal ducts, use a digital inclinometer meeting the specifications in section 6.2.1 to check the rotational position of the 0° mark on the protractor wheel. For ports on the top or bottom of horizontal ducts, observe the alignment of the angle wheel 0° mark relative to the permanent 0° mark on the duct at that test port. If these observed comparisons exceed ±2° of 0°, all angle and pressure measurements taken at that port since the protractor wheel was last locked into position on the port shall be repeated.

18.2.9 Move to the next stack or duct entry port and repeat the steps in sections 18.2.1 through 18.2.8.

18.3 Annex C—Guideline for Reference Scribe Line Placement. Use of the following guideline is recommended to satisfy the requirements of section 10.4 of this method. The rotational position of the reference scribe line should be either 90° or 180° from the probe's impact pressure port.

18.4 Annex D—Determination of Reference Scribe Line Rotational Offset. The following procedures are recommended for determining the magnitude and sign of a probe's reference scribe line rotational offset, R_{SLO}. Separate procedures are provided for two types of angle-measuring devices: digital inclinometers and protractor wheel and pointer assemblies.

18.4.1 Perform the following procedures on the main probe with all devices that will be attached to the main probe in the field [such

as thermocouples or resistance temperature detectors (RTDs)] that may affect the flow around the probe head. Probe shaft extensions that do not affect flow around the probe head need not be attached during calibration.

18.4.2 The procedures below assume that the wind tunnel duct used for probe calibration is horizontal and that the flow in the calibration wind tunnel is axial as determined by the axial flow verification check described in section 10.1.2. Angle-measuring devices are assumed to display angles in alternating 0° to 90° and 90° to 0° intervals. If angle-measuring devices with other readout conventions are used or if other calibration wind tunnel duct configurations are used, make the appropriate calculational corrections.

18.4.2.1 Position the angle-measuring device in accordance with one of the following procedures.

18.4.2.1.1 If using a digital inclinometer, affix the calibrated digital inclinometer to the probe. If the digital inclinometer can be independently adjusted after being locked into position on the probe sheath (e.g., by means of a set screw), the independent adjustment must be set so that the device performs exactly like a device without the capability for independent adjustment. That is, when aligned on the probe the device must give the same readings as a device that does not have the capability of being independently adjusted. Either align it directly on the reference scribe line or on a mark aligned with the scribe line determined according to the procedures in section 18.1.1.1. Maintaining this rotational alignment, lock the digital inclinometer onto the probe sheath.

18.4.2.1.2 If using a protractor wheel and pointer device, orient the protractor wheel on the test port so that the 0° mark is aligned with the longitudinal axis of the wind tunnel duct. Maintaining this alignment, lock the wheel into place on the wind tunnel test port. Align the scribe line on the pointer collar with the reference scribe line or with a mark aligned with the reference scribe line, as determined under section 18.1.1.1. Maintaining this rotational alignment, lock the pointer device onto the probe sheath.

18.4.2.2 Zero the pressure-measuring device used for yaw nulling.

18.4.2.3 Insert the probe assembly into the wind tunnel through the entry port, positioning the probe's impact port at the calibration location. Check the responsiveness of the pressure-measuring device to probe rotation, taking corrective action if the response is unacceptable.

18.4.2.4 Ensure that the probe is in a horizontal position using a carpenter's level.

18.4.2.5 Rotate the probe either clockwise or counterclockwise until a yaw null ($P_2=P_3$) is obtained.

18.4.2.6 Read and record the value of θ_{null}, the angle indicated by the angle-measuring device at the yaw-null position. Record the angle reading on a form similar to Table 2F–6. Do not associate an algebraic sign with this reading.

18.4.2.7 Determine the magnitude and algebraic sign of the reference scribe line rotational offset, R_{SLO}. The magnitude of R_{SLO} will be equal to either θ_{null} or $(90° - \theta_{null})$, depending on the angle-measuring device used. (See Table 2F–7 for a summary.) The algebraic sign of R_{SLO} will either be positive, if the rotational position of the reference scribe line is clockwise, or negative, if counterclockwise with respect to the probe's yaw-null position. Figure 2F–13 illustrates how the magnitude and sign of R_{SLO} are determined.

18.4.2.8 Perform the steps in sections 18.4.2.3 through 18.4.2.7 twice at each of the two calibration velocities selected for the probe under section 10.6. Record the values of R_{SLO} in a form similar to Table 2F–6.

18.4.2.9 The average of all R_{SLO} values is the reference scribe line rotational offset for the probe.

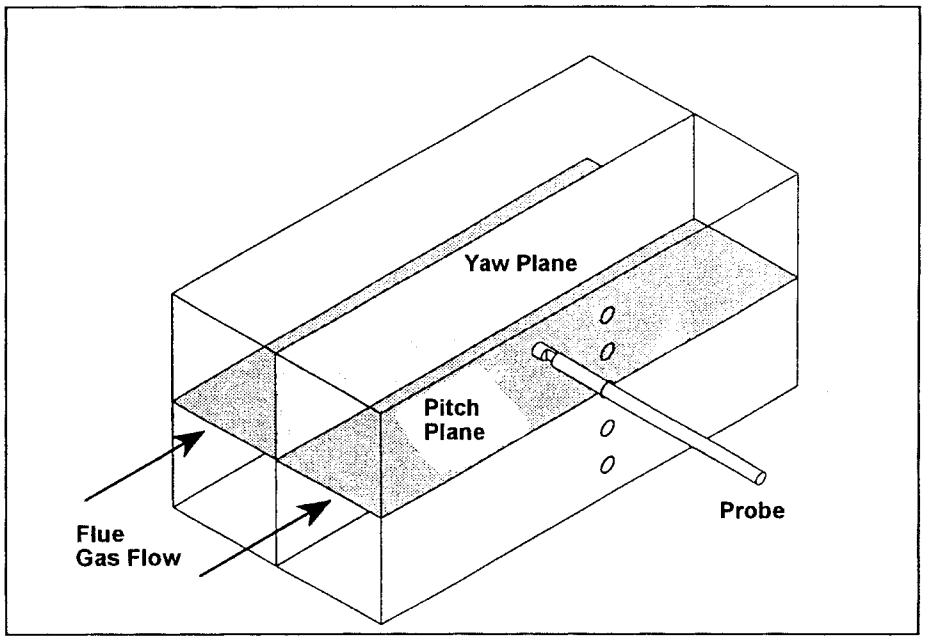

Figure 2F-1. Illustration of yaw and pitch planes in stack or duct.

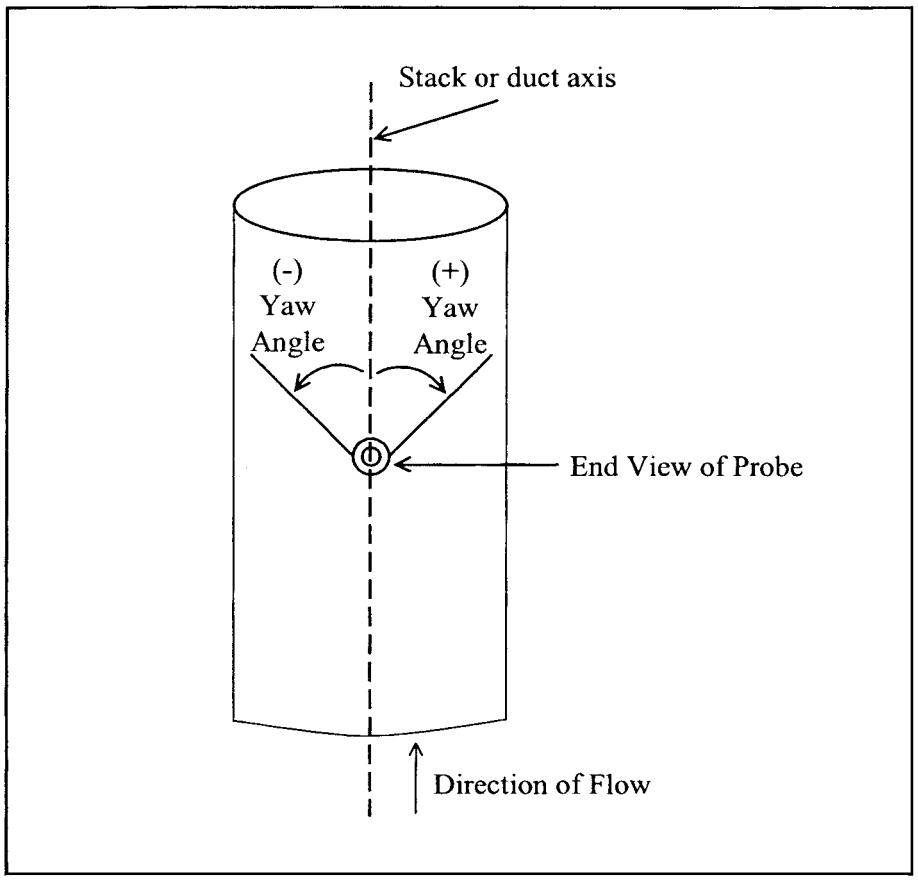

Figure 2F-2. Illustration of probe rotation representing positive and negative yaw angles.

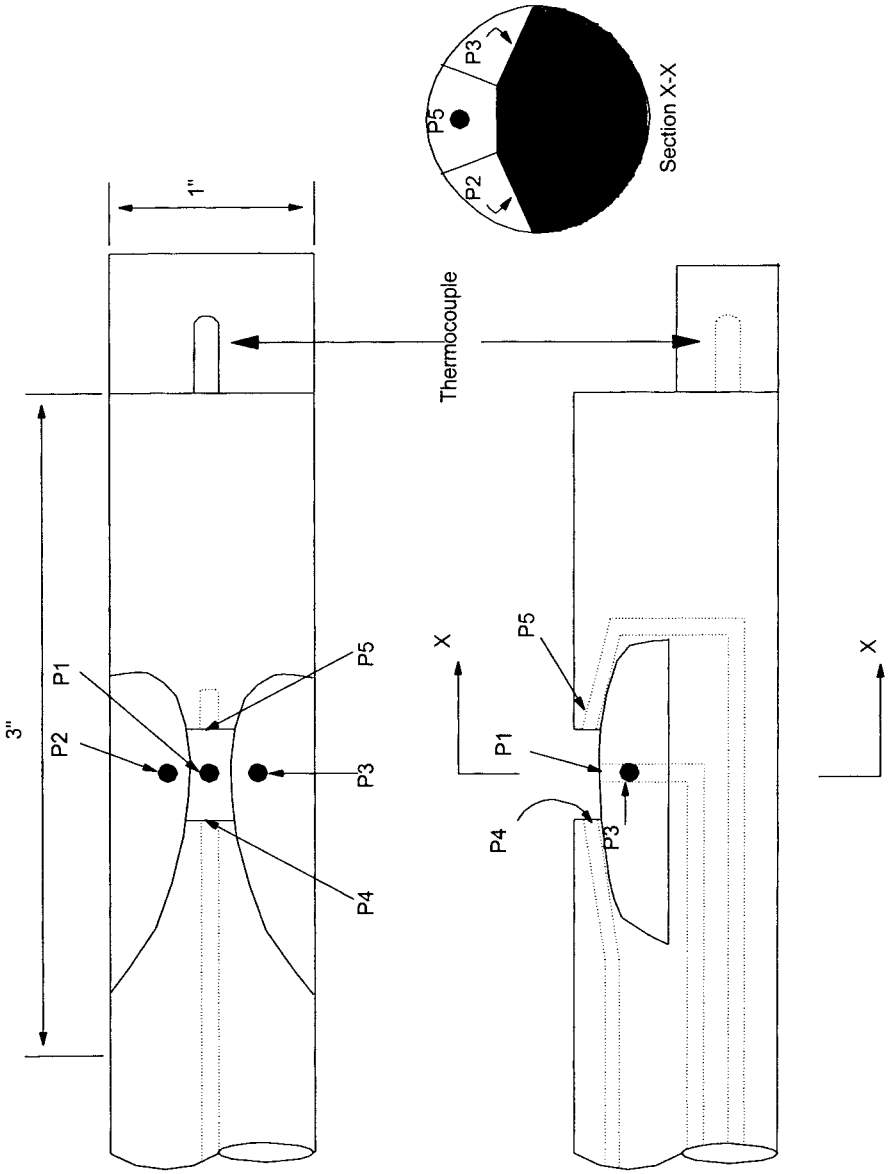

Figure 2F-3. Illustration of a five-hole prism-shaped (DAT) probe.

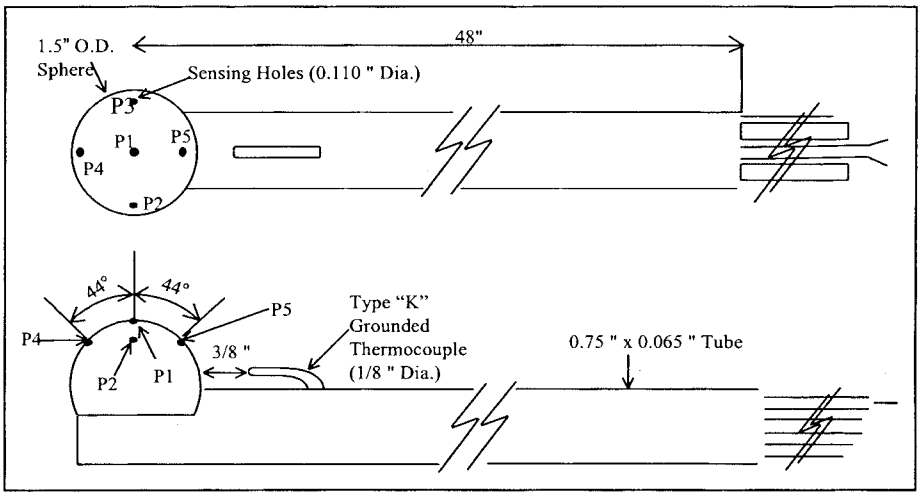

Figure 2F-4. Illustration of front and side view of spherical probe.

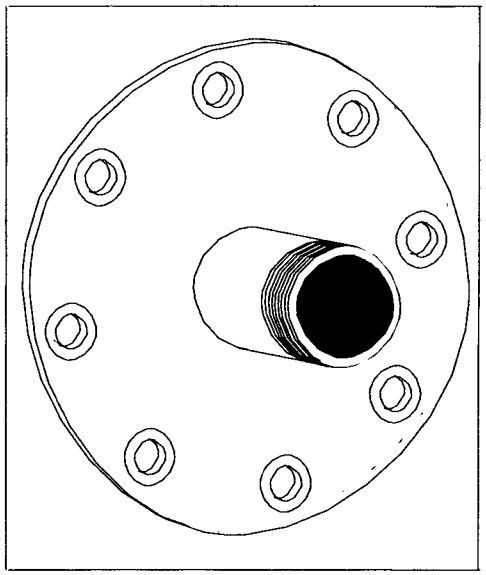

Figure 2F-5. Example bushing sleeve.

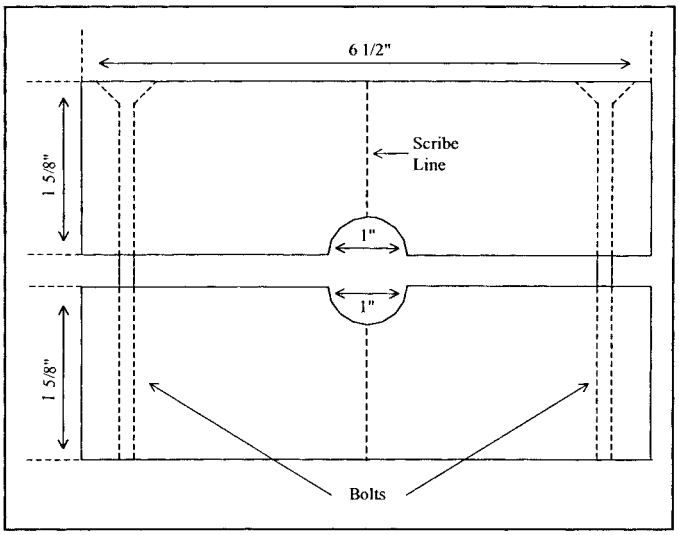

Figure 2F-6. Rotational position collar block.

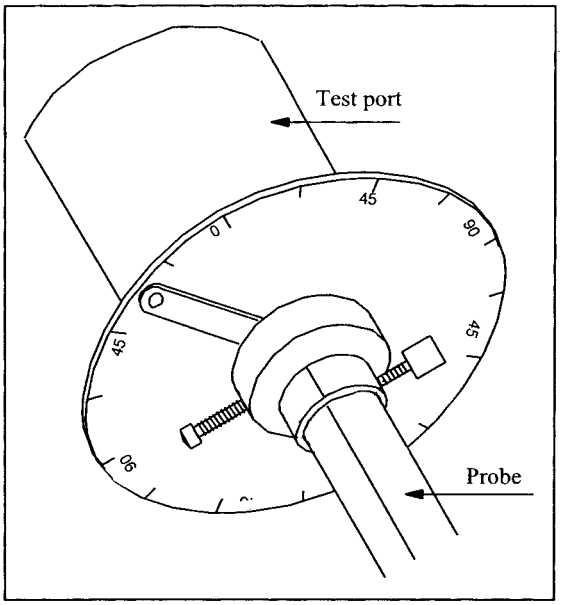

Figure 2F-7. Yaw angle protractor wheel and pointer.

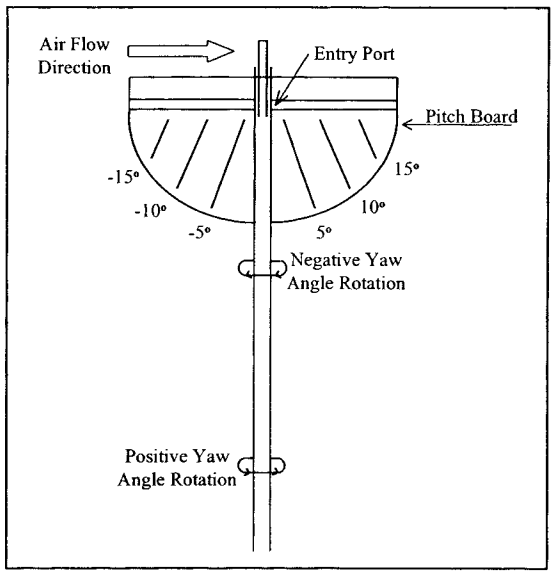

Figure 2F-8. Pitch angle protractor plate.

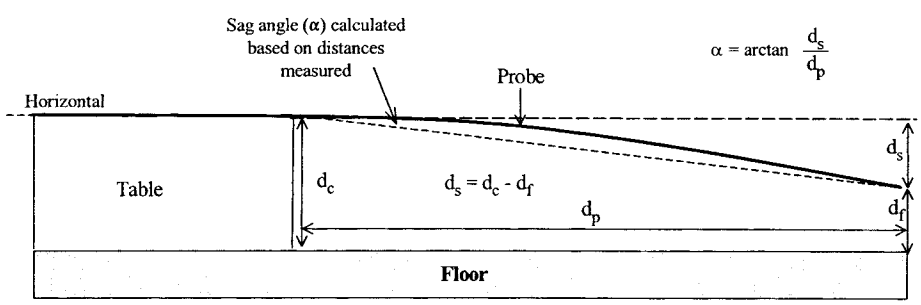

Figure 2F-9. Elements in horizontal straightness test using trigonometry.

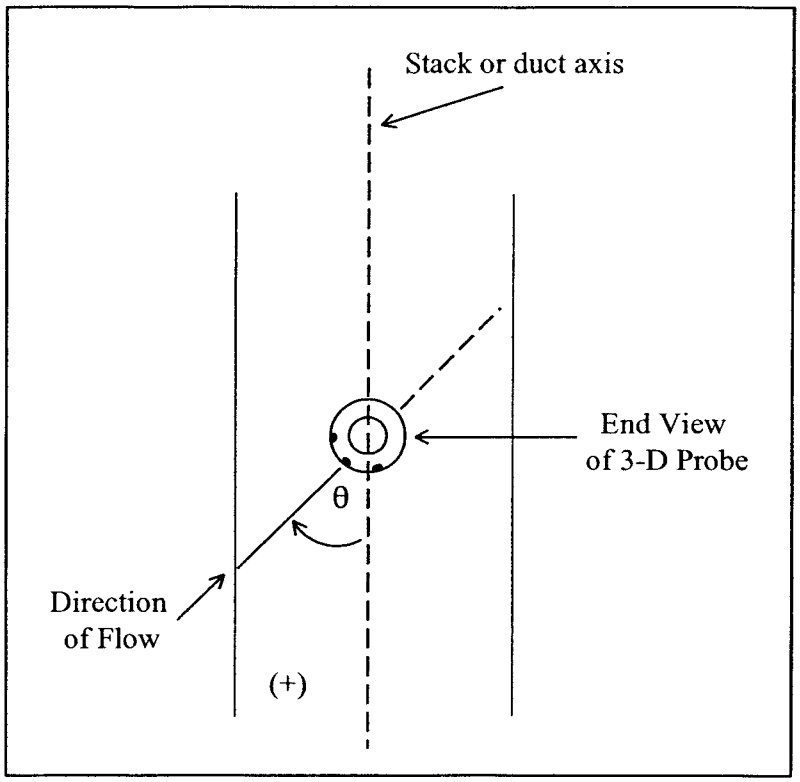

Figure 2F-10. Sign convention for the measured angle (θ) when the probe impact port is pointed directly into the flow. The angle θ is positive when the probe's impact pressure port is oriented in a clockwise rotational position relative to the stack or duct axis, as shown above and negative for a counterclockwise orientation.

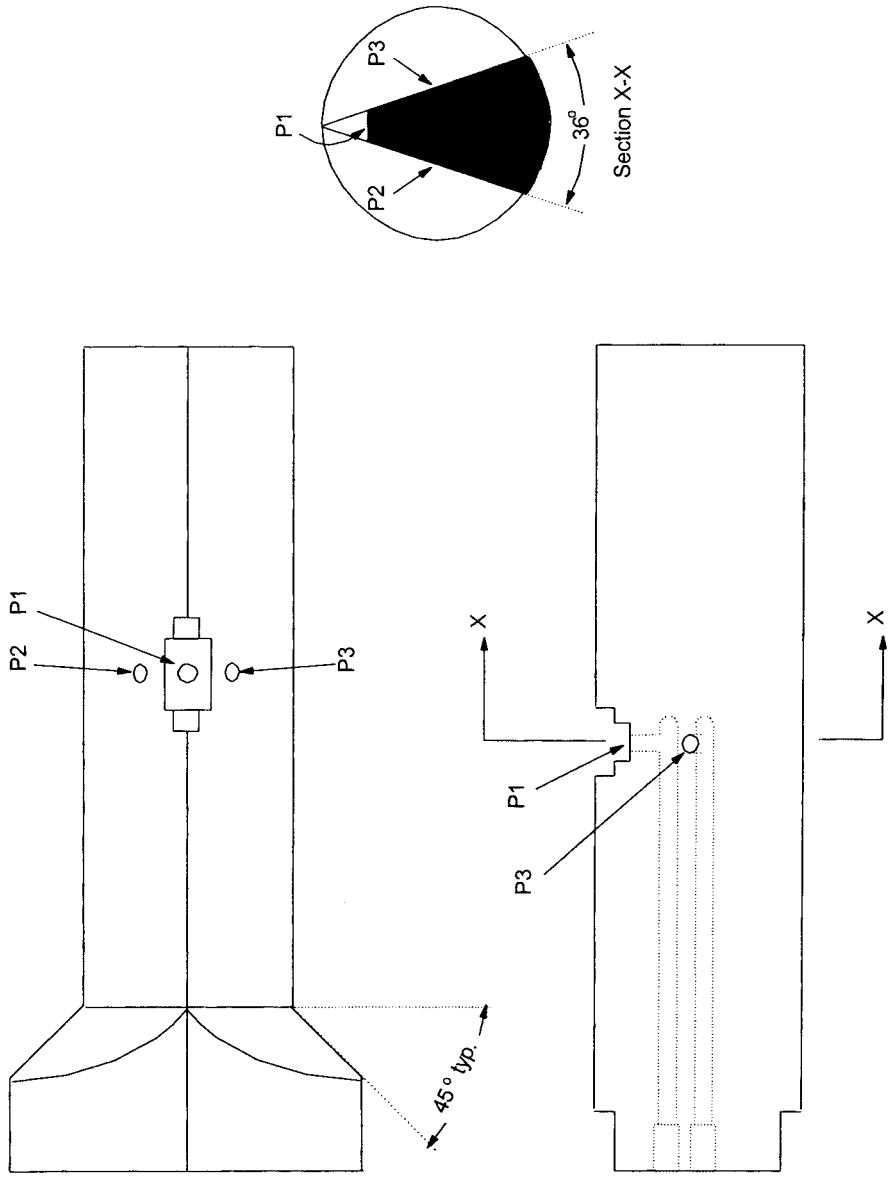

Figure 2F-11. Wedge probe used for axial flow verification.

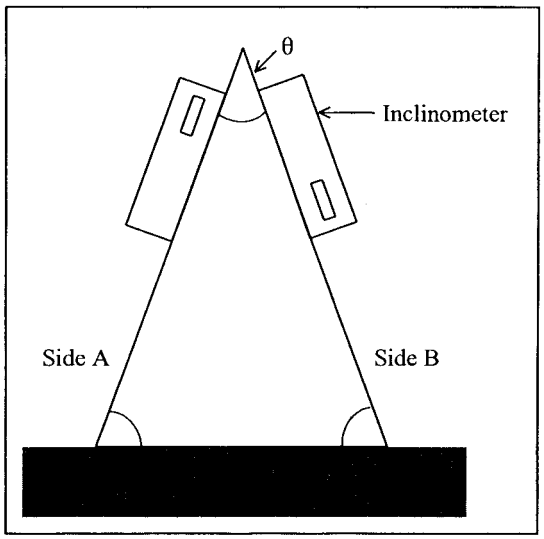

Figure 2F-12. Triangular block used for digital inclinometer calibration.

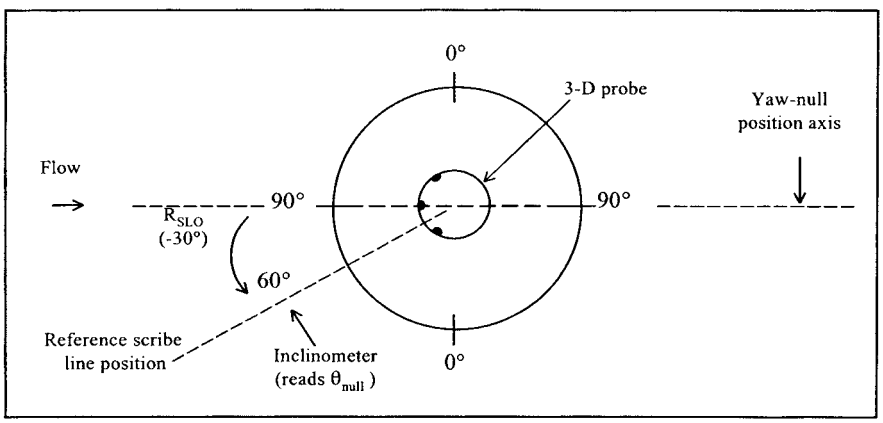

Figure 2F-13. Determination of reference scribe line rotational offset (R_{SLO}) in a horizontal wind tunnel with axial flow for a 3-D probe. The probe impact pressure port is aligned with the yaw-null position and is pointed into the flow. The inclinometer reads θ_{null}. The magnitude of R_{SLO}=90°-θ_{null} and the sign is a negative (counterclockwise from yaw-null position axis).

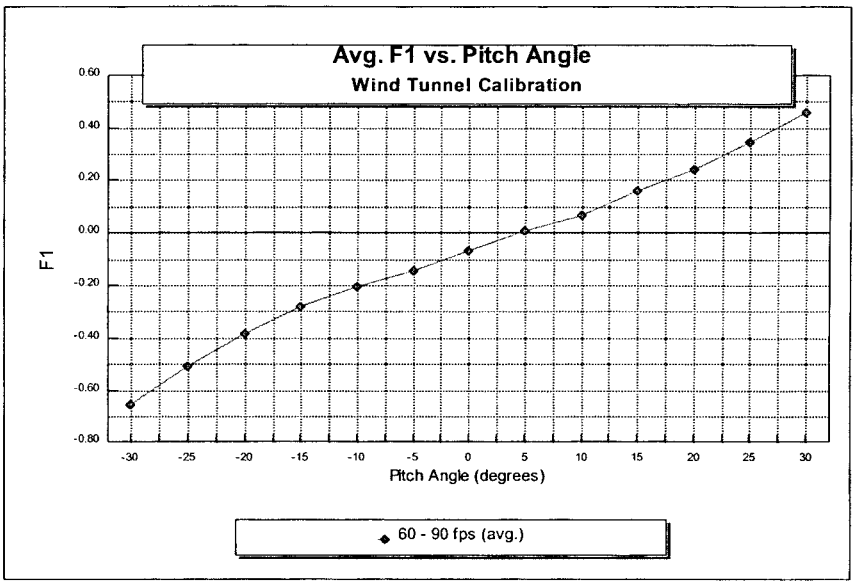

Figure 2F-14. Example F_1 calibration curve for the DAT probe.

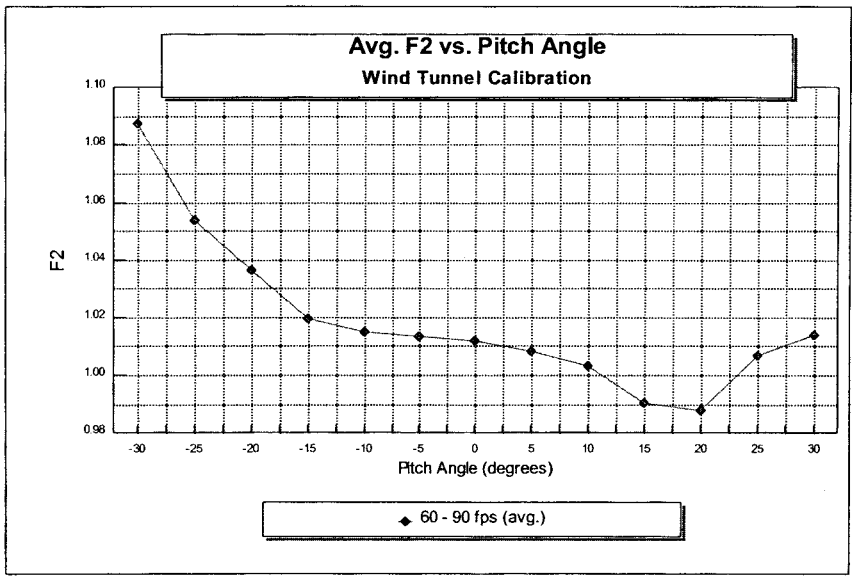

Figure 2F-15. Example F_2 calibration curve for the DAT probe.

Table 2F-1. 3-D Probe Inspection Sheet

Probe Type and ID # _____ **Date of most recent calibration**: _____

Fill in the tables below. For any item assigned a value of "1", show its location in the accompanying probe diagrams.

Inspection of Probe Ports

Port ID	Current Inspection (1=present, 0=absent)			Compared to Previous Calibration (1=changed, 0=unchanged)			Brief Description of Any Item with a Value of "1" in Preceding Columns
	Dents	Scratches	Asymmetries	Dents	Scratches	Asymmetries	
P1							
P2							
P3							
P4							
P5							

Inspection of Probe Surfaces

Surface ID	Current Inspection (1=present, 0=absent)		Compared to Previous Calibration (1=changed, 0=unchanged)		Brief Description of Any Item with a Value of "1" in Preceding Columns
	Scratches	Indentations	Scratches	Indentations	
S1					
S2					
S3					
S4					
S5					

Surface IDs S1 through S5 refer to the surfaces adjacent to pressure ports with the corresponding numbers, e.g., S3 refers to the surface adjacent to pressure port P3.

QA/QC Check

Completeness ___ Legibility ___ Accuracy ___ Specifications ___ Reasonableness ___

Certification

I certify that the Probe ID _____ meets or exceeds all specifications, criteria, and/or applicable design features required under Method 2F.

Certified by: _____ Date: _____

Table 2F-1. 3-D Probe Inspection Sheet (continued)

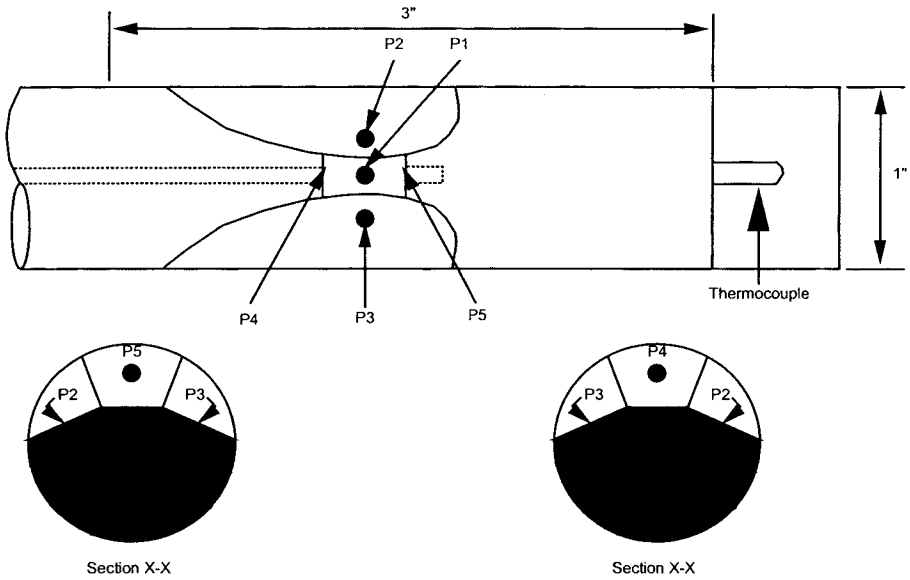

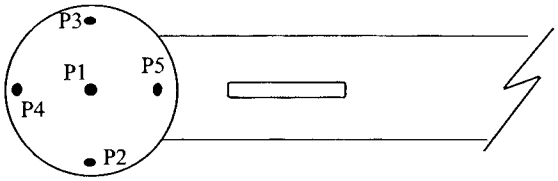

Table 2F-2. Rotational Position Check

Source: _____ Date: _____

Test Location: _____ Tester(s): _____

Probe Type: _____ Affiliation: _____

Probe ID: _____ Fully-Assembled Probe Length (in.): _____

Position	Angle Comparisons		
Distance of 2nd measurement device from probe head impact port in mm (in.)	1st Device Angle measured by device aligned on the reference scribe line, including algebraic sign (degrees)	2nd Device Angle measured by device mounted at each position to be used during testing, including algebraic sign (degrees)	R_{ADO} Difference between readings by 1st and 2nd angle-measuring devices (degrees)[a]
(Col. A)	(Col. B)	(Col. C)	(Col. C - Col. B)

[a] The algebraic sign must be consistent with section 8.3.2.

Specifications: For the pre-test rotational position check, the value of R_{ADO} at each location along the probe shaft must be determined to within ±1°. In the post-test check, R_{ADO} at each location must remain within ±2° of the value obtained in the pre-test check.

Table 2F-3. Example EPA Method 2F Field Data Form

Source: _____ Date: _____

Source Location: _____ Test Personnel: _____

Measurement Location: _____ Probe Type / ID: _____

Run ID:	
Start Time:	
End Time:	
Pressure Gauge ID:	
Pressure Gauge Readability:	in. H_2O
Temperature Gauge ID:	
Measurement Response Time:	sec.
R_{SLO}	
R_{ADO}	

Stack Diameter:	
Stack Area:	
Barometric Pressure (P_{bar}):	in. Hg
Static Pressure (P_g):	in. H_2O

	Pre-Test	Post-Test
Probe Head Condition: Damage Noted?		
Leak Check Performed?		

Clock Time	Traverse Point	Yaw Angle, including algebraic sign (degrees)	Velocity Differential Pressure (P_1-P_2)	Pitch Differential Pressure (P_4-P_5)	Stack or Duct Gas Temperature (°F)

Table 2F-4. Wind Tunnel Velocity Pressure Cross-Check

Wind Tunnel Facility: _____
Date: _____
Wind Tunnel Temperature: _____
Barometric Pressure: _____
Test Point Locations: _____
Lowest Test Velocity in m/sec (ft/sec): _____
Highest Test Velocity in m/sec (ft/sec): _____

Port		Rep.	Velocity Pressure (ΔP_{std})	
			@ Lowest Test Velocity	@ Highest Test Velocity
Calibration Pitot Tube Location		1		
		2		
		3		
		Average		
Calibration Location Test Points *	1	1		
		2		
		3		
		Average		
		% Difference **		
	2	1		
		2		
		3		
		Average		
		% Difference **		
		1		
		2		
		3		
		Average		
		% Difference **		

* Measurements must be taken at all points in the calibration location as specified in section 10.1.1

$$** \text{ Percent Difference} = \frac{(\textit{Calibration Location Test Point Avg} - \textit{Cal. Pitot Tube Location Avg})}{\textit{Cal. Pitot Tube Location Avg}} \times 100\%$$

Specification: At each velocity setting, the average velocity pressure obtained at the calibration location shall be within ±2 percent or 0.01 in. H_2O, whichever is less restrictive, of the average velocity pressure obtained at the fixed calibration pitot tube location.

Table 2F-5. Wind Tunnel Axial Flow Verification

Wind Tunnel Facility: _____
Date: _____
Wind Tunnel Temperature: _____
Barometric Pressure: _____
Probe Type/I.D. Used To Conduct Check: _____
Test Point Locations: _____
Lowest Test Velocity in m/sec (ft/sec): _____
Highest Test Velocity in m/sec (ft/sec): _____

Port		@ Lowest Test Velocity		@ Highest Test Velocity	
		Yaw Angle * (degrees)	Pitch Angle * (degrees)	Yaw Angle * (degrees)	Pitch Angle * (degrees)
Calibration Location Test Points **	1				
	2				
	3				
	..				
Calibration Pitot Tube Location					

* When following the procedures in section 10.1.2.1, both the yaw and pitch angles are obtained from the same port. When following the procedures in section 10.1.2.2, the yaw angle is obtained using the port for the tested probe, and the pitch angle is obtained using the port for verification of axial flow.

** Yaw and pitch angle measurements must be taken at all points that define the calibration location (as per the requirements in section 10.1.1)

Specification: At each velocity setting, each measured yaw and pitch angle shall be within ±3° of 0° in accordance with the requirements in section 10.1.2.

Table 2F-6. Yaw Angle Calibration

Probe Type:_____ Tester(s):_____

Probe ID:_____ Affiliation:_____

Test Location:_____ Date:_____

	Repetition 1		Repetition 2	
Nominal Velocity Setting in m/sec (ft/sec)	θ_{null} **(degrees)**	R_{SLO} **(degrees)***	θ_{null} **(degrees)**	R_{SLO} **(degrees)***
_____	_____	_____	_____	_____
_____	_____	_____	_____	_____
_____	_____	_____	_____	_____
_____	_____	_____	_____	_____
_____	_____	_____	_____	_____
_____	_____	_____	_____	_____
_____	_____	_____	_____	_____
_____	_____	_____	_____	_____
_____	_____	_____	_____	_____
Average of all recorded R_{SLO} values:			_____	

* Include magnitude and algebraic sign in accordance with section 10.5.7.

Table 2F-7. Determining the Magnitude of Reference Scribe Line Offset

Probe/Angle-Measuring Device	Magnitude of R_{SLO}
3-D probe with inclinometer	$90° - \theta_{null}$
3-D probe with protractor wheel and pointer	θ_{null}

Table 2F-8. Wind Tunnel Calibration of Three-Dimensional Probe

Wind Tunnel Facility: _____

Wind Tunnel Location: _____

Probe Type: _____

Probe ID: _____

Probe Calibration Date: _____

Test Location: _____

Calibration Pitot Tube Coeff. (C_p): _____

Ambient Temperature (° F): _____

Barometric Pressure (P_{bar}): _____

Velocity Setting (ft/sec)	Pitch Angle	Calibration Pitot Tube		Tested Probe			Calc. F_1	Calc. F_2
		ΔP_{std} (in. H_2O)*	Temp. (°F)	P_1-P_2 (in. H_2O)	P_4-P_5 (in. H_2O)	Yaw Angle (degrees)		
	-30°							
	-25°							
	-20°							
	-15°							
	-10°							
	-5°							
	0°							
	5°							
	10°							
	15°							
	20°							
	25°							
	30°							

* Calibration pitot tube measurements must, at a minimum, be taken before the tested probe reading at the first pitch angle setting, and after the tested probe reading at the last pitch angle setting in each replicate. See section 10.6.11.

Table 2F-9. Calibration Log for Three-Dimensional Probe

Probe ID: _____

Probe Type: _____

Probe Calibration Date: _____

Test Location: _____

Nominal Velocity: _____

Pitch Angle	Average of All Repetitions		Number of Repetitions
	F_1	F_2	
-35°			
-30°			
-25°			
-20°			
-15°			
-10°			
-5°			
0°			
5°			
10°			
15°			
20°			
25°			
30°			
35°			

METHOD 2G—DETERMINATION OF STACK GAS VELOCITY AND VOLUMETRIC FLOW RATE WITH TWO-DIMENSIONAL PROBES

NOTE: This method does not include all of the specifications (e.g., equipment and supplies) and procedures (e.g., sampling) essential to its performance. Some material has been incorporated from other methods in this part. Therefore, to obtain reliable results, those using this method should have a thorough knowledge of at least the following additional test methods: Methods 1, 2, 3 or 3A, and 4.

1.0 Scope and Application

1.1 This method is applicable for the determination of yaw angle, near-axial velocity, and the volumetric flow rate of a gas stream in a stack or duct using a two-dimensional (2–D) probe.

2.0 Summary of Method

2.1 A 2–D probe is used to measure the velocity pressure and the yaw angle of the flow velocity vector in a stack or duct. Alternatively, these measurements may be made by operating one of the three-dimensional (3–D) probes described in Method 2F, in yaw determination mode only. From these measurements and a determination of the stack gas density, the average near-axial velocity of the stack gas is calculated. The near-axial velocity accounts for the yaw, but not the pitch, component of flow. The average gas volumetric flow rate in the stack or duct is then determined from the average near-axial velocity.

3.0 Definitions

3.1. *Angle-measuring Device Rotational Offset (R_{ADO}).* The rotational position of an angle-measuring device relative to the reference scribe line, as determined during the pre-test rotational position check described in section 8.3.

3.2 *Calibration Pitot Tube.* The standard (Prandtl type) pitot tube used as a reference when calibrating a probe under this method.

3.3 *Field Test.* A set of measurements conducted at a specific unit or exhaust stack/duct to satisfy the applicable regulation (e.g., a three-run boiler performance test, a single-or multiple-load nine-run relative accuracy test).

3.4 *Full Scale of Pressure-measuring Device.* Full scale refers to the upper limit of the measurement range displayed by the device. For bi-directional pressure gauges, full scale includes the entire pressure range from the lowest negative value to the highest positive value on the pressure scale.

3.5 *Main probe.* Refers to the probe head and that section of probe sheath directly attached to the probe head. The main probe sheath is distinguished from probe extensions, which are sections of sheath added onto the main probe to extend its reach.

3.6 *''May,'' ''Must,'' ''Shall,'' ''Should,''* and the imperative form of verbs.

3.6.1 *''May''* is used to indicate that a provision of this method is optional.

3.6.2 *''Must,'' ''Shall,''* and the imperative form of verbs (such as ''record'' or ''enter'') are used to indicate that a provision of this method is mandatory.

3.6.3 *''Should''* is used to indicate that a provision of this method is not mandatory, but is highly recommended as good practice.

3.7 *Method 1.* Refers to 40 CFR part 60, appendix A, ''Method 1—Sample and velocity traverses for stationary sources.''

3.8 *Method 2.* Refers to 40 CFR part 60, appendix A, ''Method 2—Determination of stack gas velocity and volumetric flow rate (Type S pitot tube).''

3.9 *Method 2F.* Refers to 40 CFR part 60, appendix A, ''Method 2F—Determination of stack gas velocity and volumetric flow rate with three-dimensional probes.''

3.10 *Near-axial Velocity.* The velocity vector parallel to the axis of the stack or duct that accounts for the yaw angle component of gas flow. The term ''near-axial'' is used herein to indicate that the velocity and volumetric flow rate results account for the measured yaw angle component of flow at each measurement point.

3.11 *Nominal Velocity.* Refers to a wind tunnel velocity setting that approximates the actual wind tunnel velocity to within ±1.5 m/sec (±5 ft/sec).

3.12 *Pitch Angle.* The angle between the axis of the stack or duct and the pitch component of flow, i.e., the component of the total velocity vector in a plane defined by the traverse line and the axis of the stack or duct. (Figure 2G–1 illustrates the ''pitch plane.'') From the standpoint of a tester facing a test port in a vertical stack, the pitch component of flow is the vector of flow moving from the center of the stack toward or away from that test port. The pitch angle is the angle described by this pitch component of flow and the vertical axis of the stack.

3.13 *Readability.* For the purposes of this method, readability for an analog measurement device is one half of the smallest scale division. For a digital measurement device, it is the number of decimals displayed by the device.

3.14 *Reference Scribe Line.* A line permanently inscribed on the main probe sheath (in accordance with section 6.1.5.1) to serve as a reference mark for determining yaw angles.

3.15 *Reference Scribe Line Rotational Offset (R_{SLO}).* The rotational position of a probe's reference scribe line relative to the probe's yaw-null position, as determined during the yaw angle calibration described in section 10.5.

3.16 *Response Time.* The time required for the measurement system to fully respond to a change from zero differential pressure and ambient temperature to the stable stack or duct pressure and temperature readings at a traverse point.

3.17 *Tested Probe.* A probe that is being calibrated.

3.18 *Three-dimensional (3–D) Probe.* A directional probe used to determine the velocity pressure and the yaw and pitch angles in a flowing gas stream.

3.19 *Two-dimensional (2–D) Probe.* A directional probe used to measure velocity pressure and yaw angle in a flowing gas stream.

3.20 *Traverse Line.* A diameter or axis extending across a stack or duct on which measurements of velocity pressure and flow angles are made.

3.21 *Wind Tunnel Calibration Location.* A point, line, area, or volume within the wind tunnel test section at, along, or within which probes are calibrated. At a particular wind tunnel velocity setting, the average velocity pressures at specified points at, along, or within the calibration location shall vary by no more than 2 percent or 0.3 mm H_20 (0.01 in. H_2O), whichever is less restrictive, from the average velocity pressure at the calibration pitot tube location. Air flow at this location shall be axial, i.e., yaw and pitch angles within ±3° of 0°. Compliance with these flow criteria shall be demonstrated by performing the procedures prescribed in sections 10.1.1 and 10.1.2. For circular tunnels, no part of the calibration location may be closer to the tunnel wall than 10.2 cm (4 in.) or 25 percent of the tunnel diameter, whichever is farther from the wall. For elliptical or rectangular tunnels, no part of the calibration location may be closer to the tunnel wall than 10.2 cm (4 in.) or 25 percent of the applicable cross-sectional axis, whichever is farther from the wall.

3.22 *Wind Tunnel with Documented Axial Flow.* A wind tunnel facility documented as meeting the provisions of sections 10.1.1 (velocity pressure cross-check) and 10.1.2 (axial flow verification) using the procedures described in these sections or alternative procedures determined to be technically equivalent.

3.23 *Yaw Angle.* The angle between the axis of the stack or duct and the yaw component of flow, i.e., the component of the total velocity vector in a plane perpendicular to the traverse line at a particular traverse point. (Figure 2G–1 illustrates the ''yaw plane.'') From the standpoint of a tester facing a test port in a vertical stack, the yaw component of flow is the vector of flow moving to the left or right from the center of the stack as viewed by the tester. (This is sometimes referred to as ''vortex flow,'' i.e., flow around the centerline of a stack or duct.) The yaw angle is the angle described by this yaw component of flow and the vertical axis of the stack. The algebraic sign convention is illustrated in Figure 2G–2.

3.24 *Yaw Nulling.* A procedure in which a Type-S pitot tube or a 3–D probe is rotated about its axis in a stack or duct until a zero differential pressure reading (''yaw null'') is obtained. When a Type S probe is yaw-nulled, the rotational position of its impact port is 90° from the direction of flow in the stack or duct and the Δ P reading is zero. When a 3–D probe is yaw-nulled, its impact pressure port (P_1) faces directly into the direction of flow in the stack or duct and the differential pressure between pressure ports P_2 and P_3 is zero.

4.0 Interferences. [Reserved]

5.0 Safety

5.1 This test method may involve hazardous operations and the use of hazardous materials or equipment. This method does not purport to address all of the safety problems associated with its use. It is the responsibility of the user to establish and implement appropriate safety and health practices and to determine the applicability of regulatory limitations before using this test method.

6.0 Equipment and Supplies

6.1 Two-dimensional Probes. Probes that provide both the velocity pressure and the yaw angle of the flow vector in a stack or duct, as listed in sections 6.1.1 and 6.1.2, qualify for use based on comprehensive wind tunnel and field studies involving both inter-and intra-probe comparisons by multiple test teams. Each 2–D probe shall have a unique identification number or code permanently marked on the main probe sheath. Each probe shall be calibrated prior to use according to the procedures in section 10. Manufacturer-supplied calibration data shall be used as example information only, except when the manufacturer calibrates the probe as specified in section 10 and provides complete documentation.

6.1.1 Type S (Stausscheibe or reverse type) pitot tube. This is the same as specified in Method 2, section 2.1, except for the following additional specifications that enable the pitot tube to accurately determine the yaw component of flow. For the purposes of this method, the external diameter of the tubing used to construct the Type S pitot tube (dimension D_t in Figure 2–2 of Method 2) shall be no less than 9.5 mm (3/8 in.). The pitot tube shall also meet the following alignment specifications. The angles α_1, α_2, β_1, and β_2, as shown in Method 2, Figure 2–3, shall not exceed ±2°. The dimensions *w* and *z*, shown in Method 2, Figure 2–3 shall not exceed 0.5 mm (0.02 in.).

6.1.1.1 Manual Type S probe. This refers to a Type S probe that is positioned at individual traverse points and yaw nulled manually by an operator.

6.1.1.2 Automated Type S probe. This refers to a system that uses a computer-controlled motorized mechanism to position the Type S pitot head at individual traverse points and perform yaw angle determinations.

6.1.2 Three-dimensional probes used in 2–D mode. A 3–D probe, as specified in sections 6.1.1 through 6.1.3 of Method 2F, may, for the purposes of this method, be used in a two-dimensional mode (i.e., measuring yaw angle, but not pitch angle). When the 3–D probe is used as a 2–D probe, only the velocity pressure and yaw-null pressure are obtained using the pressure taps referred to as P_1, P_2, and P_3. The differential pressure P_1–P_2 is a function of total velocity and corresponds to the ΔP obtained using the Type S probe. The differential pressure P_2–P_3 is used to yaw null the probe and determine the yaw angle. The differential pressure P_4–P_5, which is a function of pitch angle, is not measured when the 3–D probe is used in 2–D mode.

6.1.3 Other probes. [Reserved]

6.1.4 Probe sheath. The probe shaft shall include an outer sheath to: (1) provide a surface for inscribing a permanent reference scribe line, (2) accommodate attachment of an angle-measuring device to the probe shaft, and (3) facilitate precise rotational movement of the probe for determining yaw angles. The sheath shall be rigidly attached to the probe assembly and shall enclose all pressure lines from the probe head to the farthest position away from the probe head where an angle-measuring device may be attached during use in the field. The sheath of the fully assembled probe shall be sufficiently rigid and straight at all rotational positions such that, when one end of the probe shaft is held in a horizontal position, the fully extended probe meets the horizontal straightness specifications indicated in section 8.2 below.

6.1.5 Scribe lines.

6.1.5.1 Reference scribe line. A permanent line, no greater than 1.6 mm (1/16 in.) in width, shall be inscribed on each manual probe that will be used to determine yaw angles of flow. This line shall be placed on the main probe sheath in accordance with the procedures described in section 10.4 and is used as a reference position for installation of the yaw angle-measuring device on the probe. At the discretion of the tester, the scribe line may be a single line segment placed at a particular position on the probe sheath (e.g., near the probe head), multiple line segments placed at various locations along the length of the probe sheath (e.g., at every position where a yaw angle-measuring device may be mounted), or a single continuous line extending along the full length of the probe sheath.

6.1.5.2 Scribe line on probe extensions. A permanent line may also be inscribed on any probe extension that will be attached to the main probe in performing field testing. This allows a yaw angle-measuring device mounted on the extension to be readily aligned with the reference scribe line on the main probe sheath.

6.1.5.3 Alignment specifications. This specification shall be met separately, using the procedures in section 10.4.1, on the main probe and on each probe extension. The rotational position of the scribe line or scribe line segments on the main probe or any probe extension must not vary by more than 2°. That is, the difference between the minimum and maximum of all of the rotational angles that are measured along the full length of the main probe or the probe extension must not exceed 2°.

6.1.6 Probe and system characteristics to ensure horizontal stability.

6.1.6.1 For manual probes, it is recommended that the effective length of the probe (coupled with a probe extension, if necessary) be at least 0.9 m (3 ft.) longer than the farthest traverse point mark on the probe shaft away from the probe head. The operator should maintain the probe's horizontal stability when it is fully inserted into the stack or duct. If a shorter probe is used, the probe should be inserted through a bushing sleeve, similar to the one shown in Figure 2G–3, that is installed on the test port; such a bushing shall fit snugly around the probe and be secured to the stack or duct entry port in such a manner as to maintain the probe's horizontal stability when fully inserted into the stack or duct.

6.1.6.2 An automated system that includes an external probe casing with a transport system shall have a mechanism for maintaining horizontal stability comparable to that obtained by manual probes following the provisions of this method. The automated probe assembly shall also be constructed to maintain the alignment and position of the pressure ports during sampling at each traverse point. The design of the probe casing and transport system shall allow the probe to be removed from the stack or duct and checked through direct physical measurement for angular position and insertion depth.

6.1.7 The tubing that is used to connect the probe and the pressure-measuring device should have an inside diameter of at least 3.2 mm (⅛ in.), to reduce the time required for pressure equilibration, and should be as short as practicable.

6.1.8 If a detachable probe head without a sheath [e.g., a pitot tube, typically 15.2 to 30.5 cm (6 to 12 in.) in length] is coupled with

a probe sheath and calibrated in a wind tunnel in accordance with the yaw angle calibration procedure in section 10.5, the probe head shall remain attached to the probe sheath during field testing in the same configuration and orientation as calibrated. Once the detachable probe head is uncoupled or re-oriented, the yaw angle calibration of the probe is no longer valid and must be repeated before using the probe in subsequent field tests.

6.2 Yaw Angle-measuring Device. One of the following devices shall be used for measurement of the yaw angle of flow.

6.2.1 Digital inclinometer. This refers to a digital device capable of measuring and displaying the rotational position of the probe to within ±1°. The device shall be able to be locked into position on the probe sheath or probe extension, so that it indicates the probe's rotational position throughout the test. A rotational position collar block that can be attached to the probe sheath (similar to the collar shown in Figure 2G–4) may be required to lock the digital inclinometer into position on the probe sheath.

6.2.2 Protractor wheel and pointer assembly. This apparatus, similar to that shown in Figure 2G–5, consists of the following components.

6.2.2.1 A protractor wheel that can be attached to a port opening and set in a fixed rotational position to indicate the yaw angle position of the probe's scribe line relative to the longitudinal axis of the stack or duct. The protractor wheel must have a measurement ring on its face that is no less than 17.8 cm (7 in.) in diameter, shall be able to be rotated to any angle and then locked into position on the stack or duct test port, and shall indicate angles to a resolution of 1°.

6.2.2.2 A pointer assembly that includes an indicator needle mounted on a collar that can slide over the probe sheath and be locked into a fixed rotational position on the probe sheath. The pointer needle shall be of sufficient length, rigidity, and sharpness to allow the tester to determine the probe's angular position to within 1° from the markings on the protractor wheel. Corresponding to the position of the pointer, the collar must have a scribe line to be used in aligning the pointer with the scribe line on the probe sheath.

6.2.3 Other yaw angle-measuring devices. Other angle-measuring devices with a manufacturer's specified precision of 1° or better may be used, if approved by the Administrator.

6.3 Probe Supports and Stabilization Devices. When probes are used for determining flow angles, the probe head should be kept in a stable horizontal position. For probes longer than 3.0 m (10 ft.), the section of the probe that extends outside the test port shall be secured. Three alternative devices are suggested for maintaining the horizontal position and stability of the probe shaft during flow angle determinations and velocity pressure measurements: (1) monorails installed above each port, (2) probe stands on which the probe shaft may be rested, or (3) bushing sleeves of sufficient length secured to the test ports to maintain probes in a horizontal position. Comparable provisions shall be made to ensure that automated systems maintain the horizontal position of the probe in the stack or duct. The physical characteristics of each test platform may dictate the most suitable type of stabilization device. Thus, the choice of a specific stabilization device is left to the judgement of the testers.

6.4 Differential Pressure Gauges. The velocity pressure (Δ P) measuring devices used during wind tunnel calibrations and field testing shall be either electronic manometers (e.g., pressure transducers), fluid manometers, or mechanical pressure gauges (e.g., MagnehelicΔ gauges). Use of electronic manometers is recommended. Under low velocity conditions, use of electronic manometers may be necessary to obtain acceptable measurements.

6.4.1 Differential pressure-measuring device. This refers to a device capable of measuring pressure differentials and having a readability of ±1 percent of full scale. The device shall be capable of accurately measuring the maximum expected pressure differential. Such devices are used to determine the following pressure measurements: velocity pressure, static pressure, and yaw-null pressure. For an inclined-vertical manometer, the readability specification of ±1 percent shall be met separately using the respective full-scale upper limits of the inclined anvertical portions of the scales. To the extent practicable, the device shall be selected such that most of the pressure readings are between 10 and 90 percent of the device's full-scale measurement range (as defined in section 3.4). In addition, pressure-measuring devices should be selected such that the zero does not drift by more than 5 percent of the average expected pressure readings to be encountered during the field test. This is particularly important under low pressure conditions.

6.4.2 Gauge used for yaw nulling. The differential pressure-measuring device chosen for yaw nulling the probe during the wind tunnel calibrations and field testing shall be bi-directional, i.e., capable of reading both positive and negative differential pressures. If a mechanical, bi-directional pressure gauge is chosen, it shall have a full-scale range no greater than 2.6 cm (i.e., −1.3 to +1.3 cm) [1 in. H_2O (i.e., −0.5 in. to +0.5 in.)].

6.4.3 Devices for calibrating differential pressure-measuring devices. A precision manometer (e.g., a U-tube, inclined, or inclined-vertical manometer, or micromanometer) or NIST (National Institute of Standards and Technology) traceable pressure source shall be used for calibrating differential pressure-

measuring devices. The device shall be maintained under laboratory conditions or in a similar protected environment (e.g., a climate-controlled trailer). It shall not be used in field tests. The precision manometer shall have a scale gradation of 0.3 mm H_2O (0.01 in. H_2O), or less, in the range of 0 to 5.1 cm H_2O (0 to 2 in. H_2O) and 2.5 mm H_2O (0.1 in. H_2O), or less, in the range of 5.1 to 25.4 cm H_2O (2 to 10 in. H_2O). The manometer shall have manufacturer's documentation that it meets an accuracy specification of at least 0.5 percent of full scale. The NIST-traceable pressure source shall be recertified annually.

6.4.4 Devices used for post-test calibration check. A precision manometer meeting the specifications in section 6.4.3, a pressure-measuring device or pressure source with a documented calibration traceable to NIST, or an equivalent device approved by the Administrator shall be used for the post-test calibration check. The pressure-measuring device shall have a readability equivalent to or greater than the tested device. The pressure source shall be capable of generating pressures between 50 and 90 percent of the range of the tested device and known to within ±1 percent of the full scale of the tested device. The pressure source shall be recertified annually.

6.5 Data Display and Capture Devices. Electronic manometers (if used) shall be coupled with a data display device (such as a digital panel meter, personal computer display, or strip chart) that allows the tester to observe and validate the pressure measurements taken during testing. They shall also be connected to a data recorder (such as a data logger or a personal computer with data capture software) that has the ability to compute and retain the appropriate average value at each traverse point, identified by collection time and traverse point.

6.6 Temperature Gauges. For field tests, a thermocouple or resistance temperature detector (RTD) capable of measuring temperature to within ±3°C (±5°F) of the stack or duct temperature shall be used. The thermocouple shall be attached to the probe such that the sensor tip does not touch any metal. The position of the thermocouple relative to the pressure port face openings shall be in the same configuration as used for the probe calibrations in the wind tunnel. Temperature gauges used for wind tunnel calibrations shall be capable of measuring temperature to within ±0.6°C (±1°F) of the temperature of the flowing gas stream in the wind tunnel.

6.7 Stack or Duct Static Pressure Measurement. The pressure-measuring device used with the probe shall be as specified in section 6.4 of this method. The static tap of a standard (Prandtl type) pitot tube or one leg of a Type S pitot tube with the face opening planes positioned parallel to the gas flow may be used for this measurement. Also acceptable is the pressure differential reading of P_1-P_{bar} from a five-hole prism-shaped 3–D probe, as specified in section 6.1.1 of Method 2F (such as the Type DA or DAT probe), with the P_1 pressure port face opening positioned parallel to the gas flow in the same manner as the Type S probe. However, the 3–D spherical probe, as specified in section 6.1.2 of Method 2F, is unable to provide this measurement and shall not be used to take static pressure measurements. Static pressure measurement is further described in section 8.11.

6.8 Barometer. Same as Method 2, section 2.5.

6.9 Gas Density Determination Equipment. Method 3 or 3A shall be used to determine the dry molecular weight of the stack or duct gas. Method 4 shall be used for moisture content determination and computation of stack or duct gas wet molecular weight. Other methods may be used, if approved by the Administrator.

6.10 Calibration Pitot Tube. Same as Method 2, section 2.7.

6.11 Wind Tunnel for Probe Calibration. Wind tunnels used to calibrate velocity probes must meet the following design specifications.

6.11.1 Test section cross-sectional area. The flowing gas stream shall be confined within a circular, rectangular, or elliptical duct. The cross-sectional area of the tunnel must be large enough to ensure fully developed flow in the presence of both the calibration pitot tube and the tested probe. The calibration site, or ''test section,'' of the wind tunnel shall have a minimum diameter of 30.5 cm (12 in.) for circular or elliptical duct cross-sections or a minimum width of 30.5 cm (12 in.) on the shorter side for rectangular cross-sections. Wind tunnels shall meet the probe blockage provisions of this section and the qualification requirements prescribed in section 10.1. The projected area of the portion of the probe head, shaft, and attached devices inside the wind tunnel during calibration shall represent no more than 4 percent of the cross-sectional area of the tunnel. The projected area shall include the combined area of the calibration pitot tube and the tested probe if both probes are placed simultaneously in the same cross-sectional plane in the wind tunnel, or the larger projected area of the two probes if they are placed alternately in the wind tunnel.

6.11.2 Velocity range and stability. The wind tunnel should be capable of maintaining velocities between 6.1 m/sec and 30.5 m/sec (20 ft/sec and 100 ft/sec). The wind tunnel shall produce fully developed flow patterns that are stable and parallel to the axis of the duct in the test section.

6.11.3 Flow profile at the calibration location. The wind tunnel shall provide axial flow within the test section calibration location (as defined in section 3.21). Yaw and pitch angles in the calibration location shall

be within ±3° of 0°. The procedure for determining that this requirement has been met is described in section 10.1.2.

6.11.4 Entry ports in the wind tunnel test section.

6.11.4.1 Port for tested probe. A port shall be constructed for the tested probe. This port shall be located to allow the head of the tested probe to be positioned within the wind tunnel calibration location (as defined in section 3.21). The tested probe shall be able to be locked into the 0° pitch angle position. To facilitate alignment of the probe during calibration, the test section should include a window constructed of a transparent material to allow the tested probe to be viewed.

6.11.4.2 Port for verification of axial flow. Depending on the equipment selected to conduct the axial flow verification prescribed in section 10.1.2, a second port, located 90° from the entry port for the tested probe, may be needed to allow verification that the gas flow is parallel to the central axis of the test section. This port should be located and constructed so as to allow one of the probes described in section 10.1.2.2 to access the same test point(s) that are accessible from the port described in section 6.11.4.1.

6.11.4.3 Port for calibration pitot tube. The calibration pitot tube shall be used in the port for the tested probe or in a separate entry port. In either case, all measurements with the calibration pitot tube shall be made at the same point within the wind tunnel over the course of a probe calibration. The measurement point for the calibration pitot tube shall meet the same specifications for distance from the wall and for axial flow as described in section 3.21 for the wind tunnel calibration location.

7.0 Reagents and Standards. [Reserved]

8.0 Sample Collection and Analysis

8.1 Equipment Inspection and Set Up

8.1.1 All 2–D and 3–D probes, differential pressure-measuring devices, yaw angle-measuring devices, thermocouples, and barometers shall have a current, valid calibration before being used in a field test. (See sections 10.3.3, 10.3.4, and 10.5 through 10.10 for the applicable calibration requirements.)

8.1.2 Before each field use of a Type S probe, perform a visual inspection to verify the physical condition of the pitot tube. Record the results of the inspection. If the face openings are noticeably misaligned or there is visible damage to the face openings, the probe shall not be used until repaired, the dimensional specifications verified (according to the procedures in section 10.2.1), and the probe recalibrated.

8.1.3 Before each field use of a 3–D probe, perform a visual inspection to verify the physical condition of the probe head according to the procedures in section 10.2 of Method 2F. Record the inspection results on a form similar to Table 2F–1 presented in Method 2F. If there is visible damage to the 3–D probe, the probe shall not be used until it is recalibrated.

8.1.4 After verifying that the physical condition of the probe head is acceptable, set up the apparatus using lengths of flexible tubing that are as short as practicable. Surge tanks installed between the probe and pressure-measuring device may be used to dampen pressure fluctuations provided that an adequate measurement system response time (see section 8.8) is maintained.

8.2 Horizontal Straightness Check. A horizontal straightness check shall be performed before the start of each field test, except as otherwise specified in this section. Secure the fully assembled probe (including the probe head and all probe shaft extensions) in a horizontal position using a stationary support at a point along the probe shaft approximating the location of the stack or duct entry port when the probe is sampling at the farthest traverse point from the stack or duct wall. The probe shall be rotated to detect bends. Use an angle-measuring device or trigonometry to determine the bend or sag between the probe head and the secured end. (See Figure 2G–6.) Probes that are bent or sag by more than 5° shall not be used. Although this check does not apply when the probe is used for a vertical traverse, care should be taken to avoid the use of bent probes when conducting vertical traverses. If the probe is constructed of a rigid steel material and consists of a main probe without probe extensions, this check need only be performed before the initial field use of the probe, when the probe is recalibrated, when a change is made to the design or material of the probe assembly, and when the probe becomes bent. With such probes, a visual inspection shall be made of the fully assembled probe before each field test to determine if a bend is visible. The probe shall be rotated to detect bends. The inspection results shall be documented in the field test report. If a bend in the probe is visible, the horizontal straightness check shall be performed before the probe is used.

8.3 Rotational Position Check. Before each field test, and each time an extension is added to the probe during a field test, a rotational position check shall be performed on all manually operated probes (except as noted in section 8.3.5 below) to ensure that, throughout testing, the angle-measuring device is either: aligned to within ±1° of the rotational position of the reference scribe line; or is affixed to the probe such that the rotational offset of the device from the reference scribe line is known to within ±1°. This check shall consist of direct measurements of the rotational positions of the reference scribe line and angle-measuring device sufficient to verify that these specifications are met.

Annex A in section 18 of this method gives recommended procedures for performing the rotational position check, and Table 2G–2 gives an example data form. Procedures other than those recommended in Annex A in section 18 may be used, provided they demonstrate whether the alignment specification is met and are explained in detail in the field test report.

8.3.1 Angle-measuring device rotational offset. The tester shall maintain a record of the angle-measuring device rotational offset, R_{ADO}, as defined in section 3.1. Note that R_{ADO} is assigned a value of 0° when the angle-measuring device is aligned to within ±1° of the rotational position of the reference scribe line. The R_{ADO} shall be used to determine the yaw angle of flow in accordance with section 8.9.4.

8.3.2 Sign of angle-measuring device rotational offset. The sign of R_{ADO} is positive when the angle-measuring device (as viewed from the ''tail'' end of the probe) is positioned in a clockwise direction from the reference scribe line and negative when the device is positioned in a counterclockwise direction from the reference scribe line.

8.3.3 Angle-measuring devices that can be independently adjusted (e.g., by means of a set screw), after being locked into position on the probe sheath, may be used. However, the R_{ADO} must also take into account this adjustment.

8.3.4 Post-test check. If probe extensions remain attached to the main probe throughout the field test, the rotational position check shall be repeated, at a minimum, at the completion of the field test to ensure that the angle-measuring device has remained within ±2° of its rotational position established prior to testing. At the discretion of the tester, additional checks may be conducted after completion of testing at any sample port or after any test run. If the ±2° specification is not met, all measurements made since the last successful rotational position check must be repeated. Section 18.1.1.3 of Annex A provides an example procedure for performing the post-test check.

8.3.5 Exceptions.

8.3.5.1 A rotational position check need not be performed if, for measurements taken at all velocity traverse points, the yaw angle-measuring device is mounted and aligned directly on the reference scribe line specified in sections 6.1.5.1 and 6.1.5.3 and no independent adjustments, as described in section 8.3.3, are made to device's rotational position.

8.3.5.2 If extensions are detached and re-attached to the probe during a field test, a rotational position check need only be performed the first time an extension is added to the probe, rather than each time the extension is re-attached, if the probe extension is designed to be locked into a mechanically fixed rotational position (e.g., through the use of interlocking grooves), that can re-establish the initial rotational position to within ±1°.

8.4 Leak Checks. A pre-test leak check shall be conducted before each field test. A post-test check shall be performed at the end of the field test, but additional leak checks may be conducted after any test run or group of test runs. The post-test check may also serve as the pre-test check for the next group of test runs. If any leak check is failed, all runs since the last passed leak check are invalid. While performing the leak check procedures, also check each pressure device's responsiveness to changes in pressure.

8.4.1 To perform the leak check on a Type S pitot tube, pressurize the pitot impact opening until at least 7.6 cm H_2O (3 in. H_2O) velocity pressure, or a pressure corresponding to approximately 75 percent of the pressure device's measurement scale, whichever is less, registers on the pressure device; then, close off the impact opening. The pressure shall remain stable (±2.5 mm H_2O, ±0.10 in. H_2O) for at least 15 seconds. Repeat this procedure for the static pressure side, except use suction to obtain the required pressure. Other leak-check procedures may be used, if approved by the Administrator.

8.4.2 To perform the leak check on a 3–D probe, pressurize the probe's impact (P_1) opening until at least 7.6 cm H_2O (3 in. H_2O) velocity pressure, or a pressure corresponding to approximately 75 percent of the pressure device's measurement scale, whichever is less, registers on the pressure device; then, close off the impact opening. The pressure shall remain stable (±2.5 mm H_2O, ±0.10 in. H_2O) for at least 15 seconds. Check the P_2 and P_3 pressure ports in the same fashion. Other leak-check procedures may be used, if approved by the Administrator.

8.5 Zeroing the Differential Pressure-measuring Device. Zero each differential pressure-measuring device, including the device used for yaw nulling, before each field test. At a minimum, check the zero after each field test. A zero check may also be performed after any test run or group of test runs. For fluid manometers and mechanical pressure gauges (e.g., MagnehelicΔ gauges), the zero reading shall not deviate from zero by more than ±0.8 mm H_2O (±0.03 in. H_2O) or one minor scale division, whichever is greater, between checks. For electronic manometers, the zero reading shall not deviate from zero between checks by more than: ±0.3 mm H_2O (±0.01 in. H_2O), for full scales less than or equal to 5.1 cm H_2O (2.0 in. H_2O); or ±0.8 mm H_2O (±0.03 in. H_2O), for full scales greater than 5.1 cm H_2O (2.0 in. H_2O). (NOTE: If negative zero drift is not directly readable, estimate the reading based on the position of the gauge oil in the manometer or of the

needle on the pressure gauge.) In addition, for all pressure-measuring devices except those used exclusively for yaw nulling, the zero reading shall not deviate from zero by more than 5 percent of the average measured differential pressure at any distinct process condition or load level. If any zero check is failed at a specific process condition or load level, all runs conducted at that process condition or load level since the last passed zero check are invalid.

8.6 Traverse Point Verification. The number and location of the traverse points shall be selected based on Method 1 guidelines. The stack or duct diameter and port nipple lengths, including any extension of the port nipples into the stack or duct, shall be verified the first time the test is performed; retain and use this information for subsequent field tests, updating it as required. Physically measure the stack or duct dimensions or use a calibrated laser device; do not use engineering drawings of the stack or duct. The probe length necessary to reach each traverse point shall be recorded to within ±6.4 mm (±¼ in.) and, for manual probes, marked on the probe sheath. In determining these lengths, the tester shall take into account both the distance that the port flange projects outside of the stack and the depth that any port nipple extends into the gas stream. The resulting point positions shall reflect the true distances from the inside wall of the stack or duct, so that when the tester aligns any of the markings with the outside face of the stack port, the probe's impact port shall be located at the appropriate distance from the inside wall for the respective Method 1 traverse point. Before beginning testing at a particular location, an out-of-stack or duct verification shall be performed on each probe that will be used to ensure that these position markings are correct. The distances measured during the verification must agree with the previously calculated distances to within ±¼ in. For manual probes, the traverse point positions shall be verified by measuring the distance of each mark from the probe's impact pressure port (the P_1 port for a 3-D probe). A comparable out-of-stack test shall be performed on automated probe systems. The probe shall be extended to each of the prescribed traverse point positions. Then, the accuracy of the positioning for each traverse point shall be verified by measuring the distance between the port flange and the probe's impact pressure port.

8.7 Probe Installation. Insert the probe into the test port. A solid material shall be used to seal the port.

8.8 System Response Time. Determine the response time of the probe measurement system. Insert and position the ''cold'' probe (at ambient temperature and pressure) at any Method 1 traverse point. Read and record the probe differential pressure, temperature, and elapsed time at 15-second intervals until stable readings for both pressure and temperature are achieved. The response time is the longer of these two elapsed times. Record the response time.

8.9 Sampling.

8.9.1 Yaw angle measurement protocol. With manual probes, yaw angle measurements may be obtained in two alternative ways during the field test, either by using a yaw angle-measuring device (e.g., digital inclinometer) affixed to the probe, or using a protractor wheel and pointer assembly. For horizontal traversing, either approach may be used. For vertical traversing, i.e., when measuring from on top or into the bottom of a horizontal duct, only the protractor wheel and pointer assembly may be used. With automated probes, curve-fitting protocols may be used to obtain yaw-angle measurements.

8.9.1.1 If a yaw angle-measuring device affixed to the probe is to be used, lock the device on the probe sheath, aligning it either on the reference scribe line or in the rotational offset position established under section 8.3.1.

8.9.1.2 If a protractor wheel and pointer assembly is to be used, follow the procedures in Annex B of this method.

8.9.1.3 Curve-fitting procedures. Curve-fitting routines sweep through a range of yaw angles to create curves correlating pressure to yaw position. To find the zero yaw position and the yaw angle of flow, the curve found in the stack is computationally compared to a similar curve that was previously generated under controlled conditions in a wind tunnel. A probe system that uses a curve-fitting routine for determining the yaw-null position of the probe head may be used, provided that it is verified in a wind tunnel to be able to determine the yaw angle of flow to within ±1°.

8.9.1.4 Other yaw angle determination procedures. If approved by the Administrator, other procedures for determining yaw angle may be used, provided that they are verified in a wind tunnel to be able to perform the yaw angle calibration procedure as described in section 10.5.

8.9.2 Sampling strategy. At each traverse point, first yaw-null the probe, as described in section 8.9.3, below. Then, with the probe oriented into the direction of flow, measure and record the yaw angle, the differential pressure and the temperature at the traverse point, after stable readings are achieved, in accordance with sections 8.9.4 and 8.9.5. At the start of testing in each port (i.e., after a probe has been inserted into the flue gas stream), allow at least the response time to elapse before beginning to take measurements at the first traverse point accessed from that port. Provided that the probe is

not removed from the flue gas stream, measurements may be taken at subsequent traverse points accessed from the same test port without waiting again for the response time to elapse.

8.9.3 Yaw-nulling procedure. In preparation for yaw angle determination, the probe must first be yaw nulled. After positioning the probe at the appropriate traverse point, perform the following procedures.

8.9.3.1 For Type S probes, rotate the probe until a null differential pressure reading is obtained. The direction of the probe rotation shall be such that the thermocouple is located downstream of the probe pressure ports at the yaw-null position. Rotate the probe 90° back from the yaw-null position to orient the impact pressure port into the direction of flow. Read and record the angle displayed by the angle-measuring device.

8.9.3.2 For 3-D probes, rotate the probe until a null differential pressure reading (the difference in pressures across the P_2 and P_3 pressure ports is zero, i.e., $P_2 = P_3$) is indicated by the yaw angle pressure gauge. Read and record the angle displayed by the angle-measuring device.

8.9.3.3 Sign of the measured angle. The angle displayed on the angle-measuring device is considered positive when the probe's impact pressure port (as viewed from the ''tail'' end of the probe) is oriented in a clockwise rotational position relative to the stack or duct axis and is considered negative when the probe's impact pressure port is oriented in a counterclockwise rotational position (see Figure 2G–7).

8.9.4 Yaw angle determination. After performing the applicable yaw-nulling procedure in section 8.9.3, determine the yaw angle of flow according to one of the following procedures. Special care must be observed to take into account the signs of the recorded angle reading and all offsets.

8.9.4.1 Direct-reading. If all rotational offsets are zero or if the angle-measuring device rotational offset (R_{ADO}) determined in section 8.3 exactly compensates for the scribe line rotational offset (R_{SLO}) determined in section 10.5, then the magnitude of the yaw angle is equal to the displayed angle-measuring device reading from section 8.9.3.1 or 8.9.3.2. The algebraic sign of the yaw angle is determined in accordance with section 8.9.3.3. [NOTE: Under certain circumstances (e.g., testing of horizontal ducts) a 90° adjustment to the angle-measuring device readings may be necessary to obtain the correct yaw angles.]

8.9.4.2 Compensation for rotational offsets during data reduction. When the angle-measuring device rotational offset does not compensate for reference scribe line rotational offset, the following procedure shall be used to determine the yaw angle:

(a) Enter the reading indicated by the angle-measuring device from section 8.9.3.1 or 8.9.3.2.

(b) Associate the proper algebraic sign from section 8.9.3.3 with the reading in step (a).

(c) Subtract the reference scribe line rotational offset, R_{SLO}, from the reading in step (b).

(d) Subtract the angle-measuring device rotational offset, R_{ADO}, if any, from the result obtained in step (c).

(e) The final result obtained in step (d) is the yaw angle of flow.

[NOTE: It may be necessary to first apply a 90° adjustment to the reading in step (a), in order to obtain the correct yaw angle.]

8.9.4.3 Record the yaw angle measurements on a form similar to Table 2G–3.

8.9.5 Impact velocity determination. Maintain the probe rotational position established during the yaw angle determination. Then, begin recording the pressure-measuring device readings. These pressure measurements shall be taken over a sampling period of sufficiently long duration to ensure representative readings at each traverse point. If the pressure measurements are determined from visual readings of the pressure device or display, allow sufficient time to observe the pulsation in the readings to obtain a sight-weighted average, which is then recorded manually. If an automated data acquisition system (e.g., data logger, computer-based data recorder, strip chart recorder) is used to record the pressure measurements, obtain an integrated average of all pressure readings at the traverse point. Stack or duct gas temperature measurements shall be recorded, at a minimum, once at each traverse point. Record all necessary data as shown in the example field data form (Table 2G–3).

8.9.6 Alignment check. For manually operated probes, after the required yaw angle and differential pressure and temperature measurements have been made at each traverse point, verify (e.g., by visual inspection) that the yaw angle-measuring device has remained in proper alignment with the reference scribe line or with the rotational offset position established in section 8.3. If, for a particular traverse point, the angle-measuring device is found to be in proper alignment, proceed to the next traverse point; otherwise, re-align the device and repeat the angle and differential pressure measurements at the traverse point. In the course of a traverse, if a mark used to properly align the angle-measuring device (e.g., as described in section 18.1.1.1) cannot be located, re-establish the alignment mark before proceeding with the traverse.

8.10 Probe Plugging. Periodically check for plugging of the pressure ports by observing the responses on the pressure differential

readouts. Plugging causes erratic results or sluggish responses. Rotate the probe to determine whether the readouts respond in the expected direction. If plugging is detected, correct the problem and repeat the affected measurements.

8.11 Static Pressure. Measure the static pressure in the stack or duct using the equipment described in section 6.7.

8.11.1 If a Type S probe is used for this measurement, position the probe at or between any traverse point(s) and rotate the probe until a null differential pressure reading is obtained. Disconnect the tubing from one of the pressure ports; read and record the ΔP. For pressure devices with one-directional scales, if a deflection in the positive direction is noted with the negative side disconnected, then the static pressure is positive. Likewise, if a deflection in the positive direction is noted with the positive side disconnected, then the static pressure is negative.

8.11.2 If a 3–D probe is used for this measurement, position the probe at or between any traverse point(s) and rotate the probe until a null differential pressure reading is obtained at P_2–P_3. Rotate the probe 90°. Disconnect the P_2 pressure side of the probe and read the pressure P_1–P_{bar} and record as the static pressure. (NOTE: The spherical probe, specified in section 6.1.2 of Method 2F, is unable to provide this measurement and shall not be used to take static pressure measurements.)

8.12 Atmospheric Pressure. Determine the atmospheric pressure at the sampling elevation during each test run following the procedure described in section 2.5 of Method 2.

8.13 Molecular Weight. Determine the stack or duct gas dry molecular weight. For combustion processes or processes that emit essentially CO_2, O_2, CO, and N_2, use Method 3 or 3A. For processes emitting essentially air, an analysis need not be conducted; use a dry molecular weight of 29.0. Other methods may be used, if approved by the Administrator.

8.14 Moisture. Determine the moisture content of the stack gas using Method 4 or equivalent.

8.15 Data Recording and Calculations. Record all required data on a form similar to Table 2G–3.

8.15.1 2–D probe calibration coefficient. When a Type S pitot tube is used in the field, the appropriate calibration coefficient as determined in section 10.6 shall be used to perform velocity calculations. For calibrated Type S pitot tubes, the A-side coefficient shall be used when the A-side of the tube faces the flow, and the B-side coefficient shall be used when the B-side faces the flow.

8.15.2 3–D calibration coefficient. When a 3–D probe is used to collect data with this method, follow the provisions for the calibration of 3–D probes in section 10.6 of Method 2F to obtain the appropriate velocity calibration coefficient (F_2 as derived using Equation 2F–2 in Method 2F) corresponding to a pitch angle position of 0°.

8.15.3 Calculations. Calculate the yaw-adjusted velocity at each traverse point using the equations presented in section 12.2. Calculate the test run average stack gas velocity by finding the arithmetic average of the point velocity results in accordance with sections 12.3 and 12.4, and calculate the stack gas volumetric flow rate in accordance with section 12.5 or 12.6, as applicable.

9.0 Quality Control

9.1 Quality Control Activities. In conjunction with the yaw angle determination and the pressure and temperature measurements specified in section 8.9, the following quality control checks should be performed.

9.1.1 Range of the differential pressure gauge. In accordance with the specifications in section 6.4, ensure that the proper differential pressure gauge is being used for the range of ΔP values encountered. If it is necessary to change to a more sensitive gauge, replace the gauge with a gauge calibrated according to section 10.3.3, perform the leak check described in section 8.4 and the zero check described in section 8.5, and repeat the differential pressure and temperature readings at each traverse point.

9.1.2 Horizontal stability check. For horizontal traverses of a stack or duct, visually check that the probe shaft is maintained in a horizontal position prior to taking a pressure reading. Periodically, during a test run, the probe's horizontal stability should be verified by placing a carpenter's level, a digital inclinometer, or other angle-measuring device on the portion of the probe sheath that extends outside of the test port. A comparable check should be performed by automated systems.

10.0 Calibration

10.1 Wind Tunnel Qualification Checks. To qualify for use in calibrating probes, a wind tunnel shall have the design features specified in section 6.11 and satisfy the following qualification criteria. The velocity pressure cross-check in section 10.1.1 and axial flow verification in section 10.1.2 shall be performed before the initial use of the wind tunnel and repeated immediately after any alteration occurs in the wind tunnel's configuration, fans, interior surfaces, straightening vanes, controls, or other properties that could reasonably be expected to alter the flow pattern or velocity stability in the tunnel. The owner or operator of a wind tunnel used to calibrate probes according to this method shall maintain records documenting that the wind tunnel meets the requirements of sections 10.1.1 and 10.1.2 and

shall provide these records to the Administrator upon request.

10.1.1 Velocity pressure cross-check. To verify that the wind tunnel produces the same velocity at the tested probe head as at the calibration pitot tube impact port, perform the following cross-check. Take three differential pressure measurements at the fixed calibration pitot tube location, using the calibration pitot tube specified in section 6.10, and take three measurements with the calibration pitot tube at the wind tunnel calibration location, as defined in section 3.21. Alternate the measurements between the two positions. Perform this procedure at the lowest and highest velocity settings at which the probes will be calibrated. Record the values on a form similar to Table 2G–4. At each velocity setting, the average velocity pressure obtained at the wind tunnel calibration location shall be within ±2 percent or 2.5 mm H_2O (0.01 in. H_2O), whichever is less restrictive, of the average velocity pressure obtained at the fixed calibration pitot tube location. This comparative check shall be performed at 2.5-cm (1-in.), or smaller, intervals across the full length, width, and depth (if applicable) of the wind tunnel calibration location. If the criteria are not met at every tested point, the wind tunnel calibration location must be redefined, so that acceptable results are obtained at every point. Include the results of the velocity pressure cross-check in the calibration data section of the field test report. (See section 16.1.4.)

10.1.2 Axial flow verification. The following procedures shall be performed to demonstrate that there is fully developed axial flow within the wind tunnel calibration location and at the calibration pitot tube location. Two options are available to conduct this check.

10.1.2.1 Using a calibrated 3–D probe. A probe that has been previously calibrated in a wind tunnel with documented axial flow (as defined in section 3.22) may be used to conduct this check. Insert the calibrated 3–D probe into the wind tunnel test section using the tested probe port. Following the procedures in sections 8.9 and 12.2 of Method 2F, determine the yaw and pitch angles at all the point(s) in the test section where the velocity pressure cross-check, as specified in section 10.1.1, is performed. This includes all the points in the calibration location and the point where the calibration pitot tube will be located. Determine the yaw and pitch angles at each point. Repeat these measurements at the highest and lowest velocities at which the probes will be calibrated. Record the values on a form similar to Table 2G–5. Each measured yaw and pitch angle shall be within ±3° of 0°. Exceeding the limits indicates unacceptable flow in the test section. Until the problem is corrected and acceptable flow is verified by repetition of this procedure, the wind tunnel shall not be used for calibration of probes. Include the results of the axial flow verification in the calibration data section of the field test report. (See section 16.1.4.)

10.1.2.2 Using alternative probes. Axial flow verification may be performed using an uncalibrated prism-shaped 3–D probe (e.g., DA or DAT probe) or an uncalibrated wedge probe. (Figure 2G–8 illustrates a typical wedge probe.) This approach requires use of two ports: the tested probe port and a second port located 90° from the tested probe port. Each port shall provide access to all the points within the wind tunnel test section where the velocity pressure cross-check, as specified in section 10.1.1, is conducted. The probe setup shall include establishing a reference yaw-null position on the probe sheath to serve as the location for installing the angle-measuring device. Physical design features of the DA, DAT, and wedge probes are relied on to determine the reference position. For the DA or DAT probe, this reference position can be determined by setting a digital inclinometer on the flat facet where the P_1 pressure port is located and then identifying the rotational position on the probe sheath where a second angle-measuring device would give the same angle reading. The reference position on a wedge probe shaft can be determined either geometrically or by placing a digital inclinometer on each side of the wedge and rotating the probe until equivalent readings are obtained. With the latter approach, the reference position is the rotational position on the probe sheath where an angle-measuring device would give a reading of 0°. After installation of the angle-measuring device in the reference yaw-null position on the probe sheath, determine the yaw angle from the tested port. Repeat this measurement using the 90° offset port, which provides the pitch angle of flow. Determine the yaw and pitch angles at all the point(s) in the test section where the velocity pressure cross-check, as specified in section 10.1.1, is performed. This includes all the points in the wind tunnel calibration location and the point where the calibration pitot tube will be located. Perform this check at the highest and lowest velocities at which the probes will be calibrated. Record the values on a form similar to Table 2G–5. Each measured yaw and pitch angle shall be within ±3° of 0°. Exceeding the limits indicates unacceptable flow in the test section. Until the problem is corrected and acceptable flow is verified by repetition of this procedure, the wind tunnel shall not be used for calibration of probes. Include the results in the probe calibration report.

10.1.3 Wind tunnel audits.

10.1.3.1 Procedure. Upon the request of the Administrator, the owner or operator of a wind tunnel shall calibrate a 2-D audit probe in accordance with the procedures described

in sections 10.3 through 10.6. The calibration shall be performed at two velocities that encompass the velocities typically used for this method at the facility. The resulting calibration data shall be submitted to the Agency in an audit test report. These results shall be compared by the Agency to reference calibrations of the audit probe at the same velocity settings obtained at two different wind tunnels.

10.1.3.2 Acceptance criterion. The audited tunnel's calibration coefficient is acceptable if it is within ±3 percent of the reference calibrations obtained at each velocity setting by one (or both) of the wind tunnels. If the acceptance criterion is not met at each calibration velocity setting, the audited wind tunnel shall not be used to calibrate probes for use under this method until the problems are resolved and acceptable results are obtained upon completion of a subsequent audit.

10.2 Probe Inspection.

10.2.1 Type S probe. Before each calibration of a Type S probe, verify that one leg of the tube is permanently marked A, and the other, B. Carefully examine the pitot tube from the top, side, and ends. Measure the angles (α_1, α_2, β_1, and β_2) and the dimensions (w and z) illustrated in Figures 2–2 and 2–3 in Method 2. Also measure the dimension A, as shown in the diagram in Table 2G–1, and the external tubing diameter (dimension D_t, Figure 2–2b in Method 2). For the purposes of this method, D_t shall be no less than 9.5 mm (⅜ in.). The base-to-opening plane distances P_A and P_B in Figure 2–3 of Method 2 shall be equal, and the dimension A in Table 2G–1 should be between $2.10D_t$ and $3.00D_t$. Record the inspection findings and probe measurements on a form similar to Table CD2–1 of the ''Quality Assurance Handbook for Air Pollution Measurement Systems: Volume III, Stationary Source-Specific Methods' (EPA/600/R–94/038c, September 1994). For reference, this form is reproduced herein as Table 2G–1. The pitot tube shall not be used under this method if it fails to meet the specifications in this section and the alignment specifications in section 6.1.1. All Type S probes used to collect data with this method shall be calibrated according to the procedures outlined in sections 10.3 through 10.6 below. During calibration, each Type S pitot tube shall be configured in the same manner as used, or planned to be used, during the field test, including all components in the probe assembly (e.g., thermocouple, probe sheath, sampling nozzle). Probe shaft extensions that do not affect flow around the probe head need not be attached during calibration.

10.2.2 3-D probe. If a 3-D probe is used to collect data with this method, perform the pre-calibration inspection according to procedures in Method 2F, section 10.2.

10.3 Pre-Calibration Procedures. Prior to calibration, a scribe line shall have been placed on the probe in accordance with section 10.4. The yaw angle and velocity calibration procedures shall not begin until the pretest requirements in sections 10.3.1 through 10.3.4 have been met.

10.3.1 Perform the horizontal straightness check described in section 8.2 on the probe assembly that will be calibrated in the wind tunnel.

10.3.2 Perform a leak check in accordance with section 8.4.

10.3.3 Except as noted in section 10.3.3.3, calibrate all differential pressure-measuring devices to be used in the probe calibrations, using the following procedures. At a minimum, calibrate these devices on each day that probe calibrations are performed.

10.3.3.1 Procedure. Before each wind tunnel use, all differential pressure-measuring devices shall be calibrated against the reference device specified in section 6.4.3 using a common pressure source. Perform the calibration at three reference pressures representing 30, 60, and 90 percent of the full-scale range of the pressure-measuring device being calibrated. For an inclined-vertical manometer, perform separate calibrations on the inclined and vertical portions of the measurement scale, considering each portion of the scale to be a separate full-scale range. [For example, for a manometer with a 0-to 2.5-cm H_2O (0-to 1-in. H_2O) inclined scale and a 2.5-to 12.7-cm H_2O (1-to 5-in. H_2O) vertical scale, calibrate the inclined portion at 7.6, 15.2, and 22.9 mm H_2O (0.3, 0.6, and 0.9 in. H_2O), and calibrate the vertical portion at 3.8, 7.6, and 11.4 cm H_2O (1.5, 3.0, and 4.5 in. H_2O).] Alternatively, for the vertical portion of the scale, use three evenly spaced reference pressures, one of which is equal to or higher than the highest differential pressure expected in field applications.

10.3.3.2 Acceptance criteria. At each pressure setting, the two pressure readings made using the reference device and the pressure-measuring device being calibrated shall agree to within ±2 percent of full scale of the device being calibrated or 0.5 mm H_2O (0.02 in. H_2O), whichever is less restrictive. For an inclined-vertical manometer, these requirements shall be met separately using the respective full-scale upper limits of the inclined and vertical portions of the scale. Differential pressure-measuring devices not meeting the ±2 percent of full scale or 0.5 mm H_2O (0.02 in. H_2O) calibration requirement shall not be used.

10.3.3.3 Exceptions. Any precision manometer that meets the specifications for a reference device in section 6.4.3 and that is not used for field testing does not require calibration, but must be leveled and zeroed before each wind tunnel use. Any pressure device used exclusively for yaw nulling does not require calibration, but shall be checked

for responsiveness to rotation of the probe prior to each wind tunnel use.

10.3.4 Calibrate digital inclinometers on each day of wind tunnel or field testing (prior to beginning testing) using the following procedures. Calibrate the inclinometer according to the manufacturer's calibration procedures. In addition, use a triangular block (illustrated in Figure 2G–9) with a known angle θ, independently determined using a protractor or equivalent device, between two adjacent sides to verify the inclinometer readings. (NOTE: If other angle-measuring devices meeting the provisions of section 6.2.3 are used in place of a digital inclinometer, comparable calibration procedures shall be performed on such devices.) Secure the triangular block in a fixed position. Place the inclinometer on one side of the block (side A) to measure the angle of inclination (R_1). Repeat this measurement on the adjacent side of the block (side B) using the inclinometer to obtain a second angle reading (R_2). The difference of the sum of the two readings from 180° (i.e., $180°-R_1-R_2$) shall be within ±2° of the known angle, θ.

10.4 Placement of Reference Scribe Line. Prior to the first calibration of a probe, a line shall be permanently inscribed on the main probe sheath to serve as a reference mark for determining yaw angles. Annex C in section 18 of this method gives a guideline for placement of the reference scribe line.

10.4.1 This reference scribe line shall meet the specifications in sections 6.1.5.1 and 6.1.5.3 of this method. To verify that the alignment specification in section 6.1.5.3 is met, secure the probe in a horizontal position and measure the rotational angle of each scribe line and scribe line segment using an angle-measuring device that meets the specifications in section 6.2.1 or 6.2.3. For any scribe line that is longer than 30.5 cm (12 in.), check the line's rotational position at 30.5-cm (12-in.) intervals. For each line segment that is 12 in. or less in length, check the rotational position at the two endpoints of the segment. To meet the alignment specification in section 6.1.5.3, the minimum and maximum of all of the rotational angles that are measured along the full length of main probe must not differ by more than 2°. (NOTE: A short reference scribe line segment [e.g., 15.2 cm (6 in.) or less in length] meeting the alignment specifications in section 6.1.5.3 is fully acceptable under this method. See section 18.1.1.1 of Annex A for an example of a probe marking procedure, suitable for use with a short reference scribe line.)

10.4.2 The scribe line should be placed on the probe first and then its offset from the yaw-null position established (as specified in section 10.5). The rotational position of the reference scribe line relative to the yaw-null position of the probe, as determined by the yaw angle calibration procedure in section 10.5, is the reference scribe line rotational offset, R_{SLO}. The reference scribe line rotational offset shall be recorded and retained as part of the probe's calibration record.

10.4.3 Scribe line for automated probes. A scribe line may not be necessary for an automated probe system if a reference rotational position of the probe is built into the probe system design. For such systems, a ''flat'' (or comparable, clearly identifiable physical characteristic) should be provided on the probe casing or flange plate to ensure that the reference position of the probe assembly remains in a vertical or horizontal position. The rotational offset of the flat (or comparable, clearly identifiable physical characteristic) needed to orient the reference position of the probe assembly shall be recorded and maintained as part of the automated probe system's specifications.

10.5 Yaw Angle Calibration Procedure. For each probe used to measure yaw angles with this method, a calibration procedure shall be performed in a wind tunnel meeting the specifications in section 10.1 to determine the rotational position of the reference scribe line relative to the probe's yaw-null position. This procedure shall be performed on the main probe with all devices that will be attached to the main probe in the field [such as thermocouples, resistance temperature detectors (RTDs), or sampling nozzles] that may affect the flow around the probe head. Probe shaft extensions that do not affect flow around the probe head need not be attached during calibration. At a minimum, this procedure shall include the following steps.

10.5.1 Align and lock the angle-measuring device on the reference scribe line. If a marking procedure (such as described in section 18.1.1.1) is used, align the angle-measuring device on a mark within ±1° of the rotational position of the reference scribe line. Lock the angle-measuring device onto the probe sheath at this position.

10.5.2 Zero the pressure-measuring device used for yaw nulling.

10.5.3 Insert the probe assembly into the wind tunnel through the entry port, positioning the probe's impact port at the calibration location. Check the responsiveness of the pressure-measurement device to probe rotation, taking corrective action if the response is unacceptable.

10.5.4 Ensure that the probe is in a horizontal position, using a carpenter's level.

10.5.5 Rotate the probe either clockwise or counterclockwise until a yaw null [zero ΔP for a Type S probe or zero (P_2-P_3) for a 3–D probe] is obtained. If using a Type S probe with an attached thermocouple, the direction of the probe rotation shall be such that the thermocouple is located downstream of the probe pressure ports at the yaw-null position.

10.5.6 Use the reading displayed by the angle-measuring device at the yaw-null position to determine the magnitude of the reference scribe line rotational offset, R_{SLO}, as defined in section 3.15. Annex D in section 18 of this method gives a recommended procedure for determining the magnitude of R_{SLO} with a digital inclinometer and a second procedure for determining the magnitude of R_{SLO} with a protractor wheel and pointer device. Table 2G–6 gives an example data form and Table 2G–7 is a look-up table with the recommended procedure. Procedures other than those recommended in Annex D in section 18 may be used, if they can determine R_{SLO} to within 1° and are explained in detail in the field test report. The algebraic sign of R_{SLO} will either be positive if the rotational position of the reference scribe line (as viewed from the ''tail'' end of the probe) is clockwise, or negative, if counterclockwise with respect to the probe's yaw-null position. (This is illustrated in Figure 2G–10.)

10.5.7 The steps in sections 10.5.3 through 10.5.6 shall be performed twice at each of the velocities at which the probe will be calibrated (in accordance with section 10.6). Record the values of R_{SLO}.

10.5.8 The average of all of the R_{SLO} values shall be documented as the reference scribe line rotational offset for the probe.

10.5.9 Use of reference scribe line offset. The reference scribe line rotational offset shall be used to determine the yaw angle of flow in accordance with section 8.9.4.

10.6 Velocity Calibration Procedure. When a 3–D probe is used under this method, follow the provisions for the calibration of 3–D probes in section 10.6 of Method 2F to obtain the necessary velocity calibration coefficients (F_2 as derived using Equation 2F–2 in Method 2F) corresponding to a pitch angle position of 0°. The following procedure applies to Type S probes. This procedure shall be performed on the main probe and all devices that will be attached to the main probe in the field (e.g., thermocouples, RTDs, sampling nozzles) that may affect the flow around the probe head. Probe shaft extensions that do not affect flow around the probe head need not be attached during calibration. (Note: If a sampling nozzle is part of the assembly, two additional requirements must be satisfied before proceeding. The distance between the nozzle and the pitot tube shall meet the minimum spacing requirement prescribed in Method 2, and a wind tunnel demonstration shall be performed that shows the probe's ability to yaw null is not impaired when the nozzle is drawing sample.) To obtain velocity calibration coefficient(s) for the tested probe, proceed as follows.

10.6.1 Calibration velocities. The tester may calibrate the probe at two nominal wind tunnel velocity settings of 18.3 m/sec and 27.4 m/sec (60 ft/sec and 90 ft/sec) and average the results of these calibrations, as described in sections 10.6.12 through 10.6.14, in order to generate the calibration coefficient, C_p. If this option is selected, this calibration coefficient may be used for all field applications where the velocities are 9.1 m/sec (30 ft/sec) or greater. Alternatively, the tester may customize the probe calibration for a particular field test application (or for a series of applications), based on the expected average velocity(ies) at the test site(s). If this option is selected, generate the calibration coefficients by calibrating the probe at two nominal wind tunnel velocity settings, one of which is less than or equal to and the other greater than or equal to the expected average velocity(ies) for the field application(s), and average the results as described in sections 10.6.12 through 10.6.14. Whichever calibration option is selected, the probe calibration coefficient(s) obtained at the two nominal calibration velocities shall meet the conditions specified in sections 10.6.12 through 10.6.14.

10.6.2 Connect the tested probe and calibration pitot tube to their respective pressure-measuring devices. Zero the pressure-measuring devices. Inspect and leak-check all pitot lines; repair or replace them, if necessary. Turn on the fan, and allow the wind tunnel air flow to stabilize at the first of the selected nominal velocity settings.

10.6.3 Position the calibration pitot tube at its measurement location (determined as outlined in section 6.11.4.3), and align the tube so that its tip is pointed directly into the flow. Ensure that the entry port surrounding the tube is properly sealed. The calibration pitot tube may either remain in the wind tunnel throughout the calibration, or be removed from the wind tunnel while measurements are taken with the probe being calibrated.

10.6.4 Check the zero setting of each pressure-measuring device.

10.6.5 Insert the tested probe into the wind tunnel and align it so that the designated pressure port (e.g., either the A-side or B-side of a Type S probe) is pointed directly into the flow and is positioned within the wind tunnel calibration location (as defined in section 3.21). Secure the probe at the 0° pitch angle position. Ensure that the entry port surrounding the probe is properly sealed.

10.6.6 Read the differential pressure from the calibration pitot tube (ΔP_{std}), and record its value. Read the barometric pressure to within ±2.5 mm Hg (±0.1 in. Hg) and the temperature in the wind tunnel to within 0.6°C (1°F). Record these values on a data form similar to Table 2G–8.

10.6.7 After the tested probe's differential pressure gauges have had sufficient time to stabilize, yaw null the probe (and then rotate it back 90° for Type S probes), then obtain the differential pressure reading (ΔP). Record

the yaw angle and differential pressure readings.

10.6.8 Take paired differential pressure measurements with the calibration pitot tube and tested probe (according to sections 10.6.6 and 10.6.7). The paired measurements in each replicate can be made either simultaneously (i.e., with both probes in the wind tunnel) or by alternating the measurements of the two probes (i.e., with only one probe at a time in the wind tunnel).

10.6.9 Repeat the steps in sections 10.6.6 through 10.6.8 at the same nominal velocity setting until three pairs of ΔP readings have been obtained from the calibration pitot tube and the tested probe.

10.6.10 Repeat the steps in sections 10.6.6 through 10.6.9 above for the A-side and B-side of the Type S pitot tube. For a probe assembly constructed such that its pitot tube is always used in the same orientation, only one side of the pitot tube need be calibrated (the side that will face the flow). However, the pitot tube must still meet the alignment and dimension specifications in section 6.1.1 and must have an average deviation (σ) value of 0.01 or less as provided in section 10.6.12.4.

10.6.11 Repeat the calibration procedures in sections 10.6.6 through 10.6.10 at the second selected nominal wind tunnel velocity setting.

10.6.12 Perform the following calculations separately on the A-side and B-side values.

10.6.12.1 Calculate a C_p value for each of the three replicates performed at the lower velocity setting where the calibrations were performed using Equation 2–2 in section 4.1.4 of Method 2.

10.6.12.2 Calculate the arithmetic average, $C_{p(avg\text{-}low)}$, of the three C_p values.

10.6.12.3 Calculate the deviation of each of the three individual values of C_p from the A-side average $C_{p(avg\text{-}low)}$ value using Equation 2–3 in Method 2.

10.6.12.4 Calculate the average deviation (σ) of the three individual C_p values from $C_{p(avg\text{-}low)}$ using Equation 2–4 in Method 2. Use the Type S pitot tube only if the values of σ (side A) and σ (side B) are less than or equal to 0.01. If both A-side and B-side calibration coefficients are calculated, the absolute value of the difference between $C_{p(avg\text{-}low)}$ (side A) and $C_{p(avg\text{-}low)}$ (side B) must not exceed 0.01.

10.6.13 Repeat the calculations in section 10.6.12 using the data obtained at the higher velocity setting to derive the arithmetic C_p values at the higher velocity setting, $C_{p(avg\text{-}high)}$, and to determine whether the conditions in 10.6.12.4 are met by both the A-side and B-side calibrations at this velocity setting.

10.6.14 Use equation 2G–1 to calculate the percent difference of the averaged C_p values at the two calibration velocities.

$$\%\text{Difference} = \frac{C_{p(avg\text{-}low)} - C_{p(avg\text{-}high)}}{C_{p(avg\text{-}low)}} \times 100\% \qquad \text{Eq. 2G-1}$$

The percent difference between the averaged C_p values shall not exceed ±3 percent. If the specification is met, average the A-side values of $C_{p(avg\text{-}low)}$ and $C_{p(avg\text{-}high)}$ to produce a single A-side calibration coefficient, C_p. Repeat for the B-side values if calibrations were performed on that side of the pitot. If the specification is not met, make necessary adjustments in the selected velocity settings and repeat the calibration procedure until acceptable results are obtained.

10.6.15 If the two nominal velocities used in the calibration were 18.3 and 27.4 m/sec (60 and 90 ft/sec), the average C_p from section 10.6.14 is applicable to all velocities 9.1 m/sec (30 ft/sec) or greater. If two other nominal velocities were used in the calibration, the resulting average C_p value shall be applicable only in situations where the velocity calculated using the calibration coefficient is neither less than the lower nominal velocity nor greater than the higher nominal velocity.

10.7 Recalibration. Recalibrate the probe using the procedures in section 10 either within 12 months of its first field use after its most recent calibration or after 10 field tests (as defined in section 3.3), whichever occurs later. In addition, whenever there is visible damage to the probe head, the probe shall be recalibrated before it is used again.

10.8 Calibration of pressure-measuring devices used in the field. Before its initial use in a field test, calibrate each pressure-measuring device (except those used exclusively for yaw nulling) using the three-point calibration procedure described in section 10.3.3. The device shall be recalibrated according to the procedure in section 10.3.3 no later than 90 days after its first field use following its most recent calibration. At the discretion of the tester, more frequent calibrations (e.g., after a field test) may be performed. No adjustments, other than adjustments to the zero setting, shall be made to the device between calibrations.

10.8.1 Post-test calibration check. A single-point calibration check shall be performed on each pressure-measuring device after completion of each field test. At the discretion of the tester, more frequent single-point calibration checks (e.g., after one or more field test runs) may be performed. It is recommended that the post-test check be performed before leaving the field test site. The check shall be performed at a pressure between 50 and 90 percent of full scale by taking a common pressure reading with the tested probe and a reference pressure-measuring device (as described in section 6.4.4) or by challenging the tested device with a reference pressure source (as described in section 6.4.4) or by performing an equivalent check using a reference device approved by the Administrator.

10.8.2 Acceptance criterion. At the selected pressure setting, the pressure readings made using the reference device and the tested device shall agree to within ±3 percent of full scale of the tested device or 0.8 mm H_2O (0.03 in. H_2O), whichever is less restrictive. If this specification is met, the test data collected during the field test are valid. If the specification is not met, all test data collected since the last successful calibration or calibration check are invalid and shall be repeated using a pressure-measuring device with a current, valid calibration. Any device that fails the calibration check shall not be used in a field test until a successful recalibration is performed according to the procedures in section 10.3.3.

10.9 Temperature Gauges. Same as Method 2, section 4.3. The alternative thermocouple calibration procedures outlined in Emission Measurement Center (EMC) Approved Alternative Method (ALT–011) ''Alternative Method 2 Thermocouple Calibration Procedure'' may be performed. Temperature gauges shall be calibrated no more than 30 days prior to the start of a field test or series of field tests and recalibrated no more than 30 days after completion of a field test or series of field tests.

10.10 Barometer. Same as Method 2, section 4.4. The barometer shall be calibrated no more than 30 days prior to the start of a field test or series of field tests.

11.0 Analytical Procedure

Sample collection and analysis are concurrent for this method (see section 8.0).

12.0 Data Analysis and Calculations

These calculations use the measured yaw angle and the differential pressure and temperature measurements at individual traverse points to derive the near-axial flue gas velocity ($v_{a(i)}$) at each of those points. The near-axial velocity values at all traverse points that comprise a full stack or duct traverse are then averaged to obtain the average near-axial stack or duct gas velocity ($v_{a(avg)}$).

12.1 Nomenclature

A = Cross-sectional area of stack or duct at the test port location, m^2 (ft^2).

B_{ws} = Water vapor in the gas stream (from Method 4 or alternative), proportion by volume.

C_p = Pitot tube calibration coefficient, dimensionless.

$F_{2(i)}$ = 3-D probe velocity coefficient at 0 pitch, applicable at traverse point i.

K_p = Pitot tube constant,

$$34.97\frac{m}{sec}\left[\frac{(g/g\text{-mole})(mm\ Hg)}{(°K)(mm\ H_2O)}\right]^{1/2}$$

for the metric system, and

$$85.49\frac{ft}{sec}\left[\frac{(lb/lb\text{-mole})(in.\ Hg)}{(°R)(in.\ H_2O)}\right]^{1/2}$$

for the English system.

M_d = Molecular weight of stack or duct gas, dry basis (see section 8.13), g/g-mole (lb/lb-mole).

M_s = Molecular weight of stack or duct gas, wet basis, g/g-mole (lb/lb-mole).

$$M_s = M_d(1 - B_{ws}) + 18.0B_{ws} \quad \text{Eq. 2G-2}$$

P_{bar} = Barometric pressure at velocity measurement site, mm Hg (in. Hg).

P_g = Stack or duct static pressure, mm H_2O (in. H_2O).

P_s = Absolute stack or duct pressure, mm Hg (in. Hg),

$$P_s = P_{bar} + \frac{P_g}{13.6} \quad \text{Eq. 2G-3}$$

P_{std} = Standard absolute pressure, 760 mm Hg (29.92 in. Hg).

13.6 = Conversion from mm H_2O (in. H_2O) to mm Hg (in. Hg).

Q_{sd} = Average dry-basis volumetric stack or duct gas flow rate corrected to standard conditions, dscm/hr (dscf/hr).

Q_{sw} = Average wet-basis volumetric stack or duct gas flow rate corrected to standard conditions, wscm/hr (wscf/hr).

$t_{s(i)}$ = Stack or duct temperature, °C (°F), at traverse point i.

$T_{s(i)}$ = Absolute stack or duct temperature, °K (°R), at traverse point i.

$$T_{s(i)} = 273 + t_{s(i)} \quad \text{Eq. 2G-4}$$

for the metric system, and

$$T_{s(i)} = 460 + t_{s(i)} \quad \text{Eq. 2G-5}$$

for the English system.

$T_{s(avg)}$=Average absolute stack or duct gas temperature across all traverse points.

T_{std}=Standard absolute temperature, 293°K (528°R).

$v_{a(i)}$=Measured stack or duct gas impact velocity, m/sec (ft/sec), at traverse point i.

$v_{a(avg)}$=Average near-axial stack or duct gas velocity, m/sec (ft/sec) across all traverse points.

ΔP_i=Velocity head (differential pressure) of stack or duct gas, mm H_2O (in. H_2O), applicable at traverse point i.

(P_1-P_2)=Velocity head (differential pressure) of stack or duct gas measured by a 3-D probe, mm H_2O (in. H_2O), applicable at traverse point i.

3,600=Conversion factor, sec/hr.

18.0=Molecular weight of water, g/g-mole (lb/lb-mole).

$\theta_{y(i)}$=Yaw angle of the flow velocity vector, at traverse point i.

n=Number of traverse points.

12.2 Traverse Point Velocity Calculations. Perform the following calculations from the measurements obtained at each traverse point.

12.2.1 Selection of calibration coefficient. Select the calibration coefficient as described in section 10.6.1.

12.2.2 Near-axial traverse point velocity. When using a Type S probe, use the following equation to calculate the traverse point near-axial velocity ($v_{a(i)}$) from the differential pressure (ΔP_i), yaw angle ($\theta_{y(i)}$), absolute stack or duct standard temperature ($T_{s(i)}$) measured at traverse point i, the absolute stack or duct pressure (P_s), and molecular weight (M_s).

$$v_{a(i)} = K_p C_p \sqrt{\frac{(\Delta P)_i T_{s(i)}}{P_s M_s}} \left(\cos\theta_{y(i)}\right) \qquad \text{Eq. 2G-6}$$

Use the following equation when using a 3–D probe.

$$v_{a(i)} = K_p F_2 \sqrt{\frac{(P_1 - P_2)_i T_{s(i)}}{P_s M_s}} \left(\cos\theta_{y(i)}\right) \qquad \text{Eq. 2G-7}$$

12.2.3 Handling multiple measurements at a traverse point. For pressure or temperature devices that take multiple measurements at a traverse point, the multiple measurements (or where applicable, their square roots) may first be averaged and the resulting average values used in the equations above. Alternatively, the individual measurements may be used in the equations above and the resulting calculated values may then be averaged to obtain a single traverse point value. With either approach, all of the individual measurements recorded at a traverse point must be used in calculating the applicable traverse point value.

12.3 Average Near-Axial Velocity in Stack or Duct. Use the reported traverse point near-axial velocity in the following equation.

$$v_{a(avg)} = \frac{\sum_{i=1}^{n} v_{a(i)}}{n} \qquad \text{Eq. 2G-8}$$

12.4 Acceptability of Results. The acceptability provisions in section 12.4 of Method 2F apply to 3-D probes used under Method 2G. The following provisions apply to Type S probes. For Type S probes, the test results are acceptable and the calculated value of $v_{a(avg)}$ may be reported as the average near-axial velocity for the test run if the conditions in either section 12.4.1 or 12.4.2 are met.

12.4.1 The average calibration coefficient C_p used in Equation 2G–6 was generated at nominal velocities of 18.3 and 27.4 m/sec (60 and 90 ft/sec) and the value of $v_{a(avg)}$ calculated using Equation 2G–8 is greater than or equal to 9.1 m/sec (30 ft/sec).

12.4.2 The average calibration coefficient C_p used in Equation 2G–6 was generated at nominal velocities other than 18.3 or 27.4 m/sec (60 or 90 ft/sec) and the value of $v_{a(avg)}$ calculated using Equation 2G–8 is greater than or equal to the lower nominal velocity and less than or equal to the higher nominal velocity used to derive the average C_p.

12.4.3 If the conditions in neither section 12.4.1 nor section 12.4.2 are met, the test results obtained from Equation 2G–8 are not

acceptable, and the steps in sections 12.2 and 12.3 must be repeated using an average calibration coefficient C_p that satisfies the conditions in section 12.4.1 or 12.4.2.

12.5 Average Gas Volumetric Flow Rate in Stack or Duct (Wet Basis). Use the following equation to compute the average volumetric flow rate on a wet basis.

$$Q_{sw} = 3{,}600\left(v_{a(avg)}\right)(A)\left(\frac{T_{std}}{T_{s(avg)}}\right)\left(\frac{P_s}{P_{std}}\right) \qquad \text{Eq. 2G-9}$$

12.6 Average Gas Volumetric Flow Rate in Stack or Duct (Dry Basis). Use the following equation to compute the average volumetric flow rate on a dry basis.

$$Q_{sd} = 3{,}600\left(1 - B_{ws}\right)\left(v_{a(avg)}\right)(A)\left(\frac{T_{std}}{T_{s(avg)}}\right)\left(\frac{P_s}{P_{std}}\right) \qquad \text{Eq. 2G-10}$$

13.0 Method Performance. [Reserved]

14.0 Pollution Prevention. [Reserved]

15.0 Waste Management. [Reserved]

16.0 Reporting.

16.1 Field Test Reports. Field test reports shall be submitted to the Agency according to applicable regulatory requirements. Field test reports should, at a minimum, include the following elements.

16.1.1 Description of the source. This should include the name and location of the test site, descriptions of the process tested, a description of the combustion source, an accurate diagram of stack or duct cross-sectional area at the test site showing the dimensions of the stack or duct, the location of the test ports, and traverse point locations and identification numbers or codes. It should also include a description and diagram of the stack or duct layout, showing the distance of the test location from the nearest upstream and downstream disturbances and all structural elements (including breachings, baffles, fans, straighteners, etc.) affecting the flow pattern. If the source and test location descriptions have been previously submitted to the Agency in a document (e.g., a monitoring plan or test plan), referencing the document in lieu of including this information in the field test report is acceptable.

16.1.2 Field test procedures. These should include a description of test equipment and test procedures. Testing conventions, such as traverse point numbering and measurement sequence (e.g., sampling from center to wall, or wall to center), should be clearly stated. Test port identification and directional reference for each test port should be included on the appropriate field test data sheets.

16.1.3 Field test data.

16.1.3.1 Summary of results. This summary should include the dates and times of testing, and the average near-axial gas velocity and the average flue gas volumetric flow results for each run and tested condition.

16.1.3.2 Test data. The following values for each traverse point should be recorded and reported:

(a) Differential pressure at traverse point i (ΔP_i)

(b) Stack or duct temperature at traverse point i ($t_{s(i)}$)

(c) Absolute stack or duct temperature at traverse point i ($T_{s(i)}$)

(d) Yaw angle at traverse point i ($\theta_{y(i)}$)

(e) Stack gas near-axial velocity at traverse point i ($v_{a(i)}$)

16.1.3.3 The following values should be reported once per run:

(a) Water vapor in the gas stream (from Method 4 or alternative), proportion by volume (B_{ws}), measured at the frequency specified in the applicable regulation

(b) Molecular weight of stack or duct gas, dry basis (M_d)

(c) Molecular weight of stack or duct gas, wet basis (M_s)

(d) Stack or duct static pressure (P_g)

(e) Absolute stack or duct pressure (P_s)

(f) Carbon dioxide concentration in the flue gas, dry basis ($\%_d\ CO_2$)

(g) Oxygen concentration in the flue gas, dry basis ($\%_d\ O_2$)

(h) Average near-axial stack or duct gas velocity ($v_{a(avg)}$) across all traverse points

(i) Gas volumetric flow rate corrected to standard conditions, dry or wet basis as required by the applicable regulation (Q_{sd} or Q_{sw})

16.1.3.4 The following should be reported once per complete set of test runs:

(a) Cross-sectional area of stack or duct at the test location (A)

(b) Pitot tube calibration coefficient (C_p)

(c) Measurement system response time (sec)

(d) Barometric pressure at measurement site (P_{bar})

16.1.4 Calibration data. The field test report should include calibration data for all probes and test equipment used in the field test. At a minimum, the probe calibration data reported to the Agency should include the following:

(a) Date of calibration

(b) Probe type

(c) Probe identification number(s) or code(s)

(d) Probe inspection sheets

(e) Pressure measurements and calculations used to obtain calibration coefficients in accordance with section 10.6 of this method

(f) Description and diagram of wind tunnel used for the calibration, including dimensions of cross-sectional area and position and size of the test section

(g) Documentation of wind tunnel qualification tests performed in accordance with section 10.1 of this method

16.1.5 Quality assurance. Specific quality assurance and quality control procedures used during the test should be described.

17.0 Bibliography.

(1) 40 CFR Part 60, Appendix A, Method 1—Sample and velocity traverses for stationary sources.

(2) 40 CFR Part 60, Appendix A, Method 2—Determination of stack gas velocity and volumetric flow rate (Type S pitot tube) .

(3) 40 CFR Part 60, Appendix A, Method 2F—Determination of stack gas velocity and volumetric flow rate with three-dimensional probes.

(4) 40 CFR Part 60, Appendix A, Method 2H—Determination of stack gas velocity taking into account velocity decay near the stack wall.

(5) 40 CFR Part 60, Appendix A, Method 3—Gas analysis for carbon dioxide, oxygen, excess air, and dry molecular weight.

(6) 40 CFR Part 60, Appendix A, Method 3A—Determination of oxygen and carbon dioxide concentrations in emissions from stationary sources (instrumental analyzer procedure).

(7) 40 CFR Part 60, Appendix A, Method 4—Determination of moisture content in stack gases.

(8) Emission Measurement Center (EMC) Approved Alternative Method (ALT–011) ''Alternative Method 2 Thermocouple Calibration Procedure.''

(9) Electric Power Research Institute, Interim Report EPRI TR–106698, ''Flue Gas Flow Rate Measurement Errors,'' June 1996.

(10) Electric Power Research Institute, Final Report EPRI TR–108110, ''Evaluation of Heat Rate Discrepancy from Continuous Emission Monitoring Systems,'' August 1997.

(11) Fossil Energy Research Corporation, Final Report, ''Velocity Probe Tests in Non-axial Flow Fields,'' November 1998, Prepared for the U.S. Environmental Protection Agency.

(12) Fossil Energy Research Corporation, ''Additional Swirl Tunnel Tests: E–DAT and T–DAT Probes,'' February 24, 1999, Technical Memorandum Prepared for U.S. Environmental Protection Agency, P.O. No. 7W–1193–NALX.

(13) Massachusetts Institute of Technology, Report WBWT–TR–1317, ''Calibration of Eight Wind Speed Probes Over a Reynolds Number Range of 46,000 to 725,000 Per Foot, Text and Summary Plots,'' Plus appendices, October 15, 1998, Prepared for The Cadmus Group, Inc.

(14) National Institute of Standards and Technology, Special Publication 250, ''NIST Calibration Services Users Guide 1991,'' Revised October 1991, U.S. Department of Commerce, p. 2.

(15) National Institute of Standards and Technology, 1998, ''Report of Special Test of Air Speed Instrumentation, Four Prandtl Probes, Four S-Type Probes, Four French Probes, Four Modified Kiel Probes,'' Prepared for the U.S. Environmental Protection Agency under IAG #DW13938432–01–0.

(16) National Institute of Standards and Technology, 1998, ''Report of Special Test of Air Speed In-strumentation, Five Autoprobes,'' Prepared for the U.S. Environmental Protection Agency under IAG #DW13938432–01–0.

(17) National Institute of Standards and Technology, 1998, ''Report of Special Test of Air Speed Instrumentation, Eight Spherical Probes,'' Prepared for the U.S. Environmental Protection Agency under IAG #DW13938432–01–0.

(18) National Institute of Standards and Technology, 1998, ''Report of Special Test of Air Speed Instrumentation, Four DAT Probes, '' Prepared for the U.S. Environmental Protection Agency under IAG #DW13938432–01–0.

(19) Norfleet, S.K., ''An Evaluation of Wall Effects on Stack Flow Velocities and Related Overestimation Bias in EPA's Stack Flow Reference Methods,'' EPRI CEMS User's Group Meeting, New Orleans, Louisiana, May 13–15, 1998.

(20) Page, J.J., E.A. Potts, and R.T. Shigehara, ''3–D Pitot Tube Calibration

Study,'' EPA Contract No. 68D10009, Work Assignment No. I–121, March 11, 1993.

(21) Shigehara, R.T., W.F. Todd, and W.S. Smith, ''Significance of Errors in Stack Sampling Measurements,'' Presented at the Annual Meeting of the Air Pollution Control Association, St. Louis, Missouri, June 1419, 1970.

(22) The Cadmus Group, Inc., May 1999, ''EPA Flow Reference Method Testing and Analysis: Findings Report,'' EPA/430–R–99–009.

(23) The Cadmus Group, Inc., 1998, ''EPA Flow Reference Method Testing and Analysis: Data Report, Texas Utilities, DeCordova Steam Electric Station, Volume I: Test Description and Appendix A (Data Distribution Package),'' EPA/430–R–98–015a.

(24) The Cadmus Group, Inc., 1998, ''EPA Flow Reference Method Testing and Analysis: Data Report, Texas Utilities, Lake Hubbard Steam Electric Station, Volume I: Test Description and Appendix A (Data Distribution Package),'' EPA/430–R–98–017a.

(25) The Cadmus Group, Inc., 1998, ''EPA Flow Reference Method Testing and Analysis: Data Report, Pennsylvania Electric Co., G.P.U. Genco Homer City Station: Unit 1, Volume I: Test Description and Appendix A (Data Distribution Package),'' EPA/430–R–98–018a.

(26) The Cadmus Group, Inc., 1997, ''EPA Flow Reference Method Testing and Analysis: Wind Tunnel Experimental Results,'' EPA/430–R–97–013.

18.0 Annexes

Annex A, C, and D describe recommended procedures for meeting certain provisions in sections 8.3, 10.4, and 10.5 of this method. Annex B describes procedures to be followed when using the protractor wheel and pointer assembly to measure yaw angles, as provided under section 8.9.1.

18.1 Annex A—Rotational Position Check. The following are recommended procedures that may be used to satisfy the rotational position check requirements of section 8.3 of this method and to determine the angle-measuring device rotational offset (R_{ADO}).

18.1.1 Rotational position check with probe outside stack. Where physical constraints at the sampling location allow full assembly of the probe outside the stack and insertion into the test port, the following procedures should be performed before the start of testing. Two angle-measuring devices that meet the specifications in section 6.2.1 or 6.2.3 are required for the rotational position check. An angle measuring device whose position can be independently adjusted (e.g., by means of a set screw) after being locked into position on the probe sheath shall not be used for this check unless the independent adjustment is set so that the device performs exactly like a device without the capability for independent adjustment. That is, when aligned on the probe such a device must give the same reading as a device that does not have the capability of being independently adjusted. With the fully assembled probe (including probe shaft extensions, if any) secured in a horizontal position, affix one yaw angle-measuring device to the probe sheath and lock it into position on the reference scribe line specified in section 6.1.5.1. Position the second angle-measuring device using the procedure in section 18.1.1.1 or 18.1.1.2.

18.1.1.1 Marking procedure. The procedures in this section should be performed at each location on the fully assembled probe where the yaw angle-measuring device will be mounted during the velocity traverse. Place the second yaw angle-measuring device on the main probe sheath (or extension) at the position where a yaw angle will be measured during the velocity traverse. Adjust the position of the second angle-measuring device until it indicates the same angle (±1°) as the reference device, and affix the second device to the probe sheath (or extension). Record the angles indicated by the two angle-measuring devices on a form similar to table 2G–2. In this position, the second angle-measuring device is considered to be properly positioned for yaw angle measurement. Make a mark, no wider than 1.6 mm (1/16 in.), on the probe sheath (or extension), such that the yaw angle-measuring device can be re-affixed at this same properly aligned position during the velocity traverse.

18.1.1.2 Procedure for probe extensions with scribe lines. If, during a velocity traverse the angle-measuring device will be affixed to a probe extension having a scribe line as specified in section 6.1.5.2, the following procedure may be used to align the extension's scribe line with the reference scribe line instead of marking the extension as described in section 18.1.1.1. Attach the probe extension to the main probe. Align and lock the second angle-measuring device on the probe extension's scribe line. Then, rotate the extension until both measuring devices indicate the same angle (±1°). Lock the extension at this rotational position. Record the angles indicated by the two angle-measuring devices on a form similar to table 2G–2. An angle-measuring device may be aligned at any position on this scribe line during the velocity traverse, if the scribe line meets the alignment specification in section 6.1.5.3.

18.1.1.3 Post-test rotational position check. If the fully assembled probe includes one or more extensions, the following check should be performed immediately after the completion of a velocity traverse. At the discretion of the tester, additional checks may be conducted after completion of testing at any sample port. Without altering the alignment of any of the components of the probe

assembly used in the velocity traverse, secure the fully assembled probe in a horizontal position. Affix an angle-measuring device at the reference scribe line specified in section 6.1.5.1. Use the other angle-measuring device to check the angle at each location where the device was checked prior to testing. Record the readings from the two angle-measuring devices.

18.1.2 Rotational position check with probe in stack. This section applies only to probes that, due to physical constraints, cannot be inserted into the test port as fully assembled with all necessary extensions needed to reach the inner-most traverse point(s).

18.1.2.1 Perform the out-of-stack procedure in section 18.1.1 on the main probe and any attached extensions that will be initially inserted into the test port.

18.1.2.2 Use the following procedures to perform additional rotational position check(s) with the probe in the stack, each time a probe extension is added. Two angle-measuring devices are required. The first of these is the device that was used to measure yaw angles at the preceding traverse point, left in its properly aligned measurement position. The second angle-measuring device is positioned on the added probe extension. Use the applicable procedures in section 18.1.1.1 or 18.1.1.2 to align, adjust, lock, and mark (if necessary) the position of the second angle-measuring device to within ±1° of the first device. Record the readings of the two devices on a form similar to Table 2G–2.

18.1.2.3 The procedure in section 18.1.2.2 should be performed at the first port where measurements are taken. The procedure should be repeated each time a probe extension is re-attached at a subsequent port, unless the probe extensions are designed to be locked into a mechanically fixed rotational position (e.g., through use of interlocking grooves), which can be reproduced from port to port as specified in section 8.3.5.2.

18.2 Annex B—Angle Measurement Protocol for Protractor Wheel and Pointer Device. The following procedure shall be used when a protractor wheel and pointer assembly, such as the one described in section 6.2.2 and illustrated in Figure 2G–5 is used to measure the yaw angle of flow. With each move to a new traverse point, unlock, re-align, and re-lock the probe, angle-pointer collar, and protractor wheel to each other. At each such move, particular attention is required to ensure that the scribe line on the angle pointer collar is either aligned with the reference scribe line on the main probe sheath or is at the rotational offset position established under section 8.3.1. The procedure consists of the following steps:

18.2.1 Affix a protractor wheel to the entry port for the test probe in the stack or duct.

18.2.2 Orient the protractor wheel so that the 0° mark corresponds to the longitudinal axis of the stack or duct. For stacks, vertical ducts, or ports on the side of horizontal ducts, use a digital inclinometer meeting the specifications in section 6.2.1 to locate the 0° orientation. For ports on the top or bottom of horizontal ducts, identify the longitudinal axis at each test port and permanently mark the duct to indicate the 0° orientation. Once the protractor wheel is properly aligned, lock it into position on the test port.

18.2.3 Move the pointer assembly along the probe sheath to the position needed to take measurements at the first traverse point. Align the scribe line on the pointer collar with the reference scribe line or at the rotational offset position established under section 8.3.1. Maintaining this rotational alignment, lock the pointer device onto the probe sheath. Insert the probe into the entry port to the depth needed to take measurements at the first traverse point.

18.2.4 Perform the yaw angle determination as specified in sections 8.9.3 and 8.9.4 and record the angle as shown by the pointer on the protractor wheel. Then, take velocity pressure and temperature measurements in accordance with the procedure in section 8.9.5. Perform the alignment check described in section 8.9.6.

18.2.5 After taking velocity pressure measurements at that traverse point, unlock the probe from the collar and slide the probe through the collar to the depth needed to reach the next traverse point.

18.2.6 Align the scribe line on the pointer collar with the reference scribe line on the main probe or at the rotational offset position established under section 8.3.1. Lock the collar onto the probe.

18.2.7 Repeat the steps in sections 18.2.4 through 18.2.6 at the remaining traverse points accessed from the current stack or duct entry port.

18.2.8 After completing the measurement at the last traverse point accessed from a port, verify that the orientation of the protractor wheel on the test port has not changed over the course of the traverse at that port. For stacks, vertical ducts, or ports on the side of horizontal ducts, use a digital inclinometer meeting the specifications in section 6.2.1 to check the rotational position of the 0° mark on the protractor wheel. For ports on the top or bottom of horizontal ducts, observe the alignment of the angle wheel 0° mark relative to the permanent 0° mark on the duct at that test port. If these observed comparisons exceed ±2° of 0°, all angle and pressure measurements taken at that port since the protractor wheel was last locked into position on the port shall be repeated.

18.2.9 Move to the next stack or duct entry port and repeat the steps in sections 18.2.1 through 18.2.8.

18.3 Annex C—Guideline for Reference Scribe Line Placement. Use of the following

guideline is recommended to satisfy the requirements of section 10.4 of this method. The rotational position of the reference scribe line should be either 90° or 180° from the probe's impact pressure port. For Type-S probes, place separate scribe lines, on opposite sides of the probe sheath, if both the A and B sides of the pitot tube are to be used for yaw angle measurements.

18.4 Annex D—Determination of Reference Scribe Line Rotational Offset. The following procedures are recommended for determining the magnitude and sign of a probe's reference scribe line rotational offset, R_{SLO}. Separate procedures are provided for two types of angle-measuring devices: digital inclinometers and protractor wheel and pointer assemblies.

18.4.1 Perform the following procedures on the main probe with all devices that will be attached to the main probe in the field [such as thermocouples, resistance temperature detectors (RTDs), or sampling nozzles] that may affect the flow around the probe head. Probe shaft extensions that do not affect flow around the probe head need not be attached during calibration.

18.4.2 The procedures below assume that the wind tunnel duct used for probe calibration is horizontal and that the flow in the calibration wind tunnel is axial as determined by the axial flow verification check described in section 10.1.2. Angle-measuring devices are assumed to display angles in alternating 0° to 90° and 90° to 0° intervals. If angle-measuring devices with other readout conventions are used or if other calibration wind tunnel duct configurations are used, make the appropriate calculational corrections. For Type-S probes, calibrate the A-side and B-sides separately, using the appropriate scribe line (see section 18.3, above), if both the A and B sides of the pitot tube are to be used for yaw angle determinations.

18.4.2.1 Position the angle-measuring device in accordance with one of the following procedures.

18.4.2.1.1 If using a digital inclinometer, affix the calibrated digital inclinometer to the probe. If the digital inclinometer can be independently adjusted after being locked into position on the probe sheath (e.g., by means of a set screw), the independent adjustment must be set so that the device performs exactly like a device without the capability for independent adjustment. That is, when aligned on the probe the device must give the same readings as a device that does not have the capability of being independently adjusted. Either align it directly on the reference scribe line or on a mark aligned with the scribe line determined according to the procedures in section 18.1.1.1. Maintaining this rotational alignment, lock the digital inclinometer onto the probe sheath.

18.4.2.1.2 If using a protractor wheel and pointer device, orient the protractor wheel on the test port so that the 0° mark is aligned with the longitudinal axis of the wind tunnel duct. Maintaining this alignment, lock the wheel into place on the wind tunnel test port. Align the scribe line on the pointer collar with the reference scribe line or with a mark aligned with the reference scribe line, as determined under section 18.1.1.1. Maintaining this rotational alignment, lock the pointer device onto the probe sheath.

18.4.2.2 Zero the pressure-measuring device used for yaw nulling.

18.4.2.3 Insert the probe assembly into the wind tunnel through the entry port, positioning the probe's impact port at the calibration location. Check the responsiveness of the pressure-measuring device to probe rotation, taking corrective action if the response is unacceptable.

18.4.2.4 Ensure that the probe is in a horizontal position using a carpenter's level.

18.4.2.5 Rotate the probe either clockwise or counterclockwise until a yaw null [zero ΔP for a Type S probe or zero (P_2–P_3) for a 3–D probe] is obtained. If using a Type S probe with an attached thermocouple, the direction of the probe rotation shall be such that the thermocouple is located downstream of the probe pressure ports at the yaw-null position.

18.4.2.6 Read and record the value of θ_{null}, the angle indicated by the angle-measuring device at the yaw-null position. Record the angle reading on a form similar to Table 2G–6. Do not associate an algebraic sign with this reading.

18.4.2.7 Determine the magnitude and algebraic sign of the reference scribe line rotational offset, R_{SLO}. The magnitude of R_{SLO} will be equal to either θ_{null} or $(90° - \theta_{null})$, depending on the type of probe being calibrated and the type of angle-measuring device used. (See Table 2G–7 for a summary.) The algebraic sign of R_{SLO} will either be positive if the rotational position of the reference scribe line is clockwise or negative if counterclockwise with respect to the probe's yaw-null position. Figure 2G–10 illustrates how the magnitude and sign of R_{SLO} are determined.

18.4.2.8 Perform the steps in sections 18.3.2.3 through 18.3.2.7 twice at each of the two calibration velocities selected for the probe under section 10.6. Record the values of R_{SLO} in a form similar to Table 2G–6.

18.4.2.9 The average of all R_{SLO} values is the reference scribe line rotational offset for the probe.

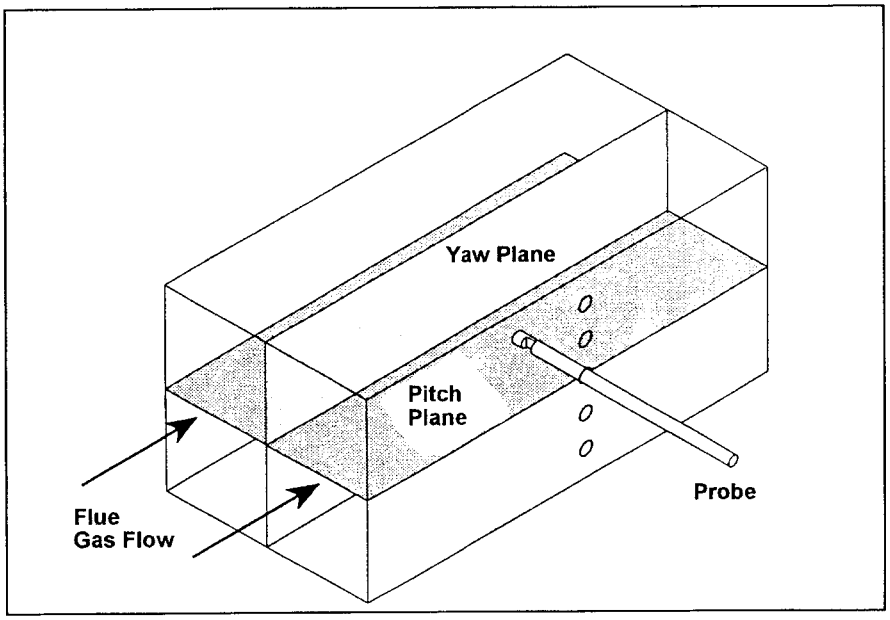

Figure 2G-1. Illustration of yaw and pitch planes in stack or duct.

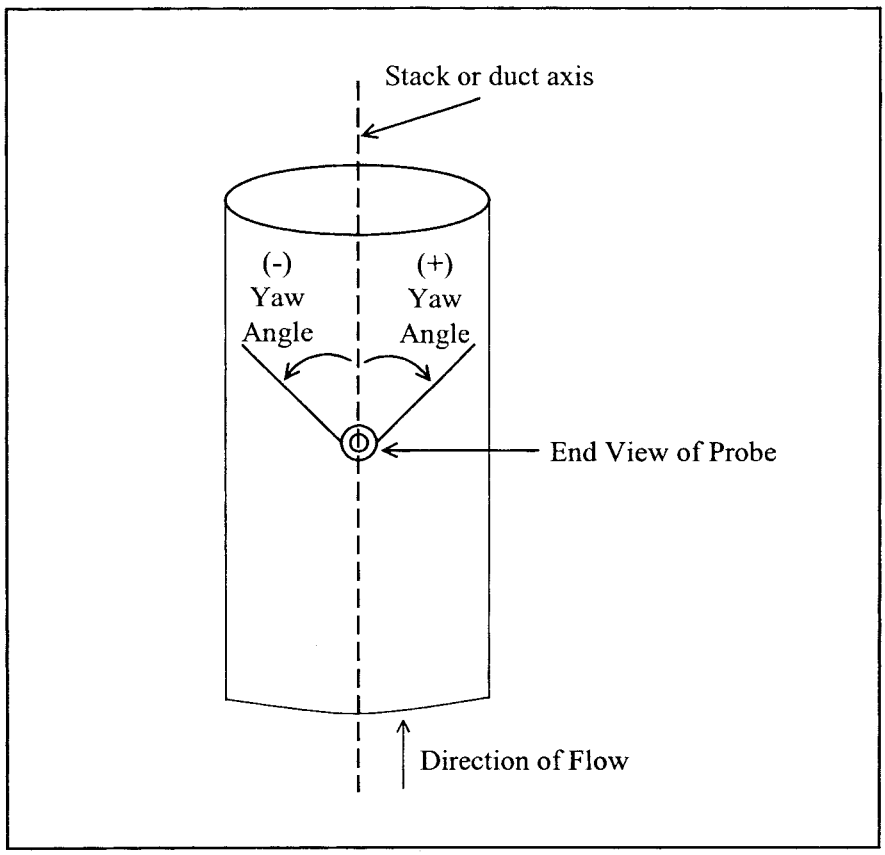

Figure 2G-2. Illustration of probe rotation representing positive and negative yaw angles.

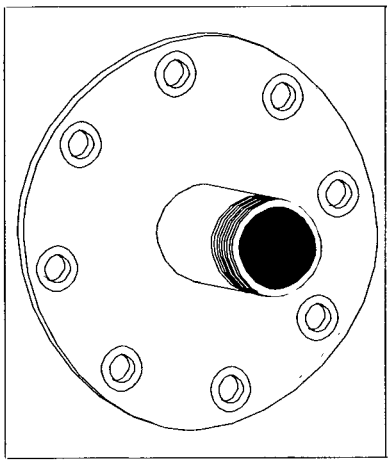

Figure 2G-3. Example bushing sleeve.

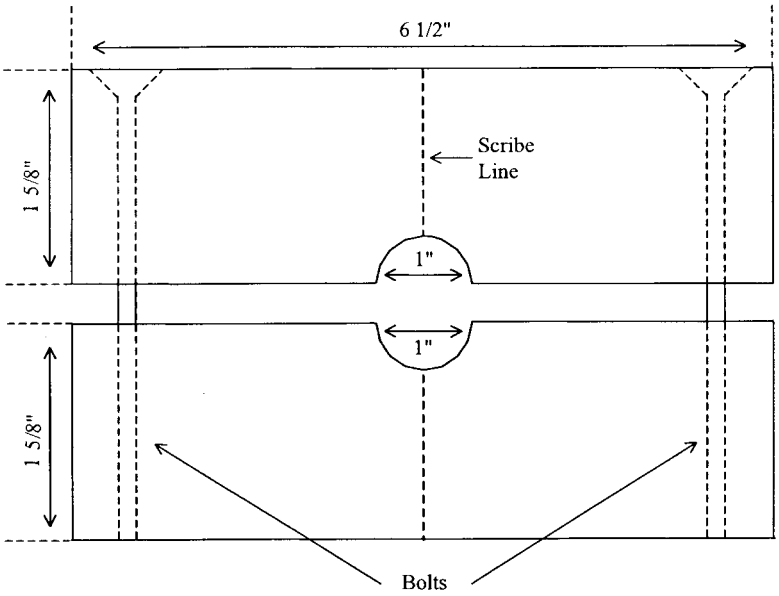

Figure 2G-4. Rotational position collar block.

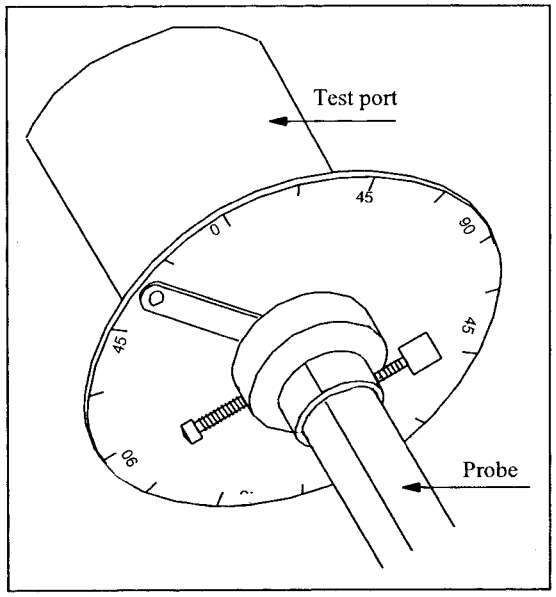

Figure 2G-5. Yaw angle protractor wheel and pointer.

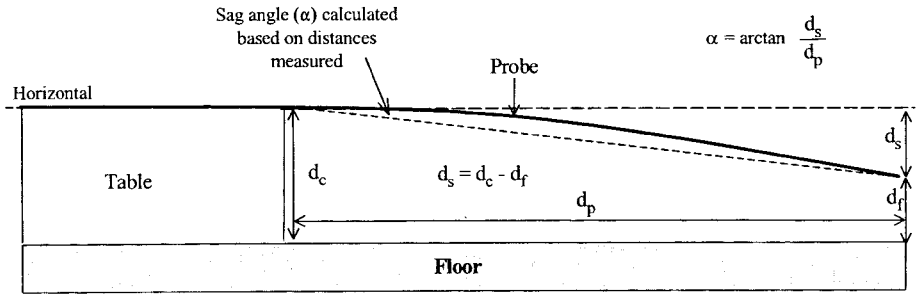

Figure 2G-6. Elements in horizontal straightness test based on trigonometry.

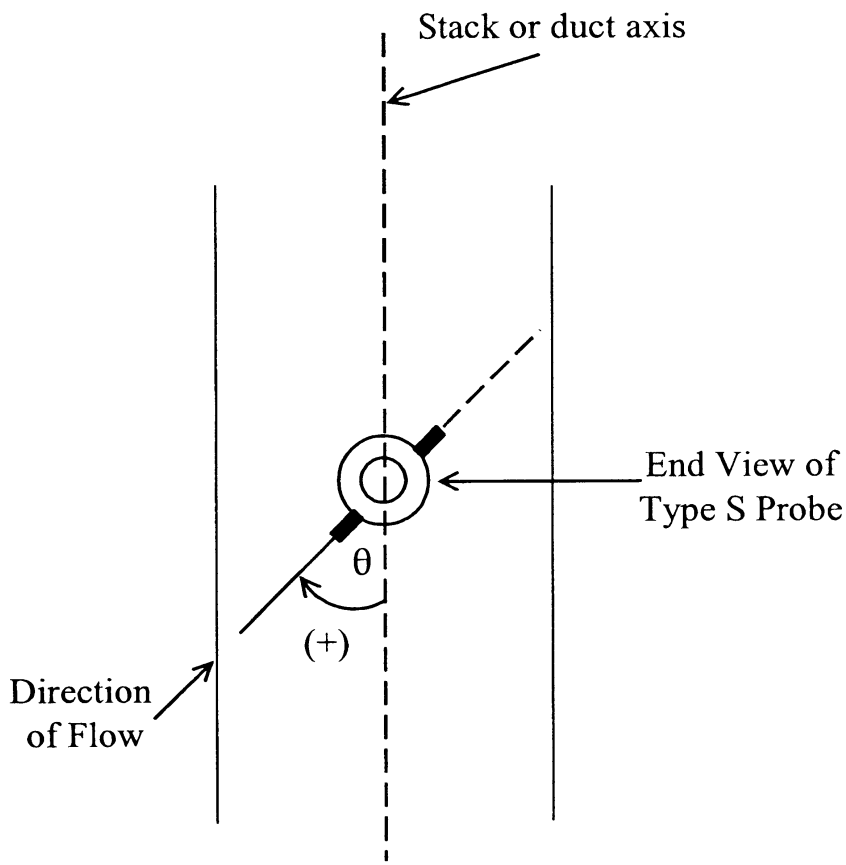

Figure 2G-7. Sign convention for the measured angle (θ) when the probe impact port is pointed directly into the flow. The angle θ is positive when the probe's impact pressure port is oriented in a clockwise rotational position relative to the stack or duct axis, as shown above, and negative for a counter-clockwise orientation.

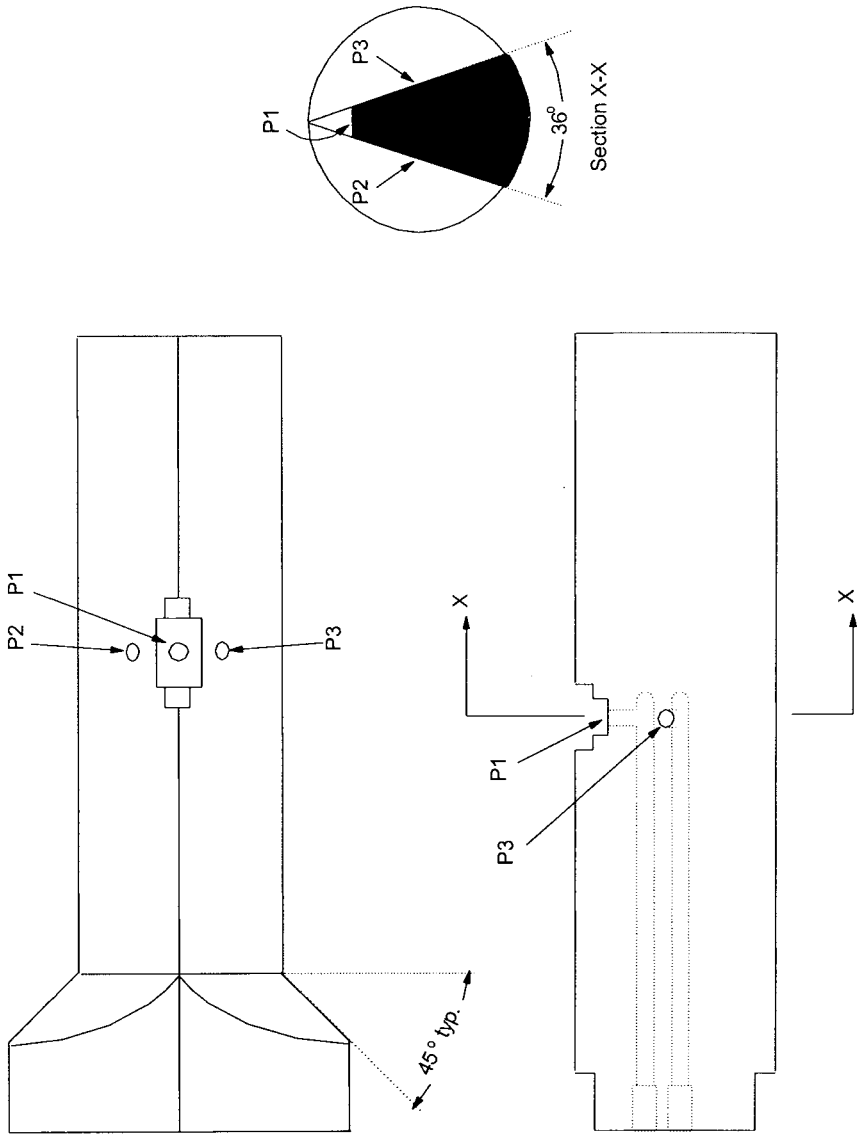

Figure 2G-8. Wedge probe used for axial flow verification.

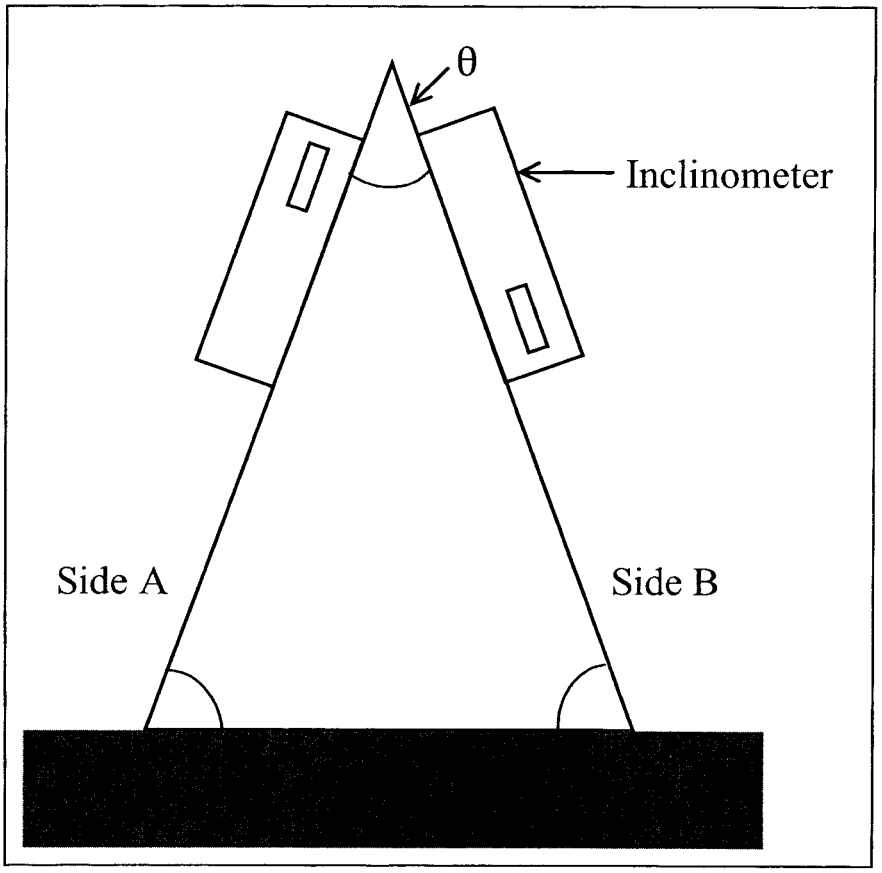

Figure 2G-9. Triangular block used for digital inclinometer calibration.

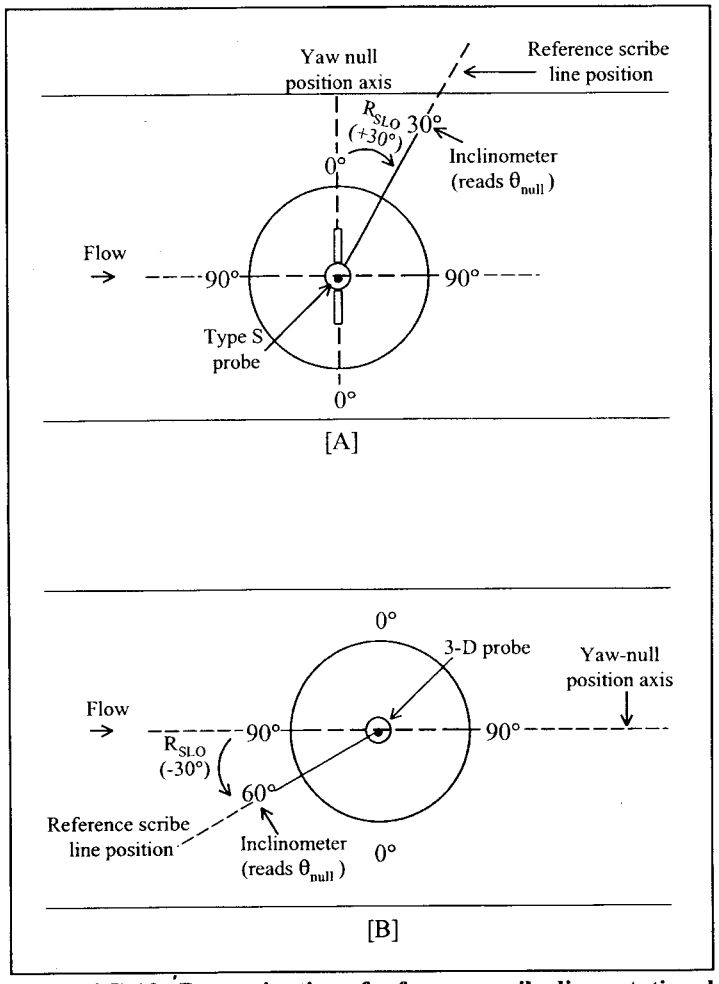

Figure 2G-10. Determination of reference scribe line rotational offset (R_{SLO}) in a horizontal wind tunnel with axial flow for: [A], a Type S probe, and [B], a 3-D probe. In [A] and [B], the probe impact pressure port is aligned with the yaw-null position axis and the inclinometer reads θ_{null}. In [A], the magnitude of R_{SLO} = θ_{null} and the sign is positive (clockwise from yaw-null position axis). In [B], the magnitude of R_{SLO} = 90°-θ_{null} and the sign is negative (counterclockwise from yaw-null position axis).

Table 2G-1. Type S Probe Inspection Sheet

Note: Method 2 provides the criteria for an acceptably constructed Type S pitot tube. However, the procedure for making the necessary measurements is not specified. One approach is given below.

1. Use a vise with parallel and perpendicular faces. Use an angle-measuring device (analog or digital) for this check.
2. Place the pitot tube in the vise, and level the pitot tube horizontally using the angle-measuring device.
3. Place the angle-measuring device as shown below.
4. Measure distance A, which is P_A plus P_B. Method 2 specifies that $P_A = P_B$, but provides no tolerance for this measurement. Because this measurement is very difficult, it is suggested that $P_A = P_B = A/2$.
5. Measure the external tube diameter (D_t) with a micrometer, machinist's rule, or internal caliper.
6. Record all data as shown on the form below.
7. Calculate dimensions w and z as shown below.

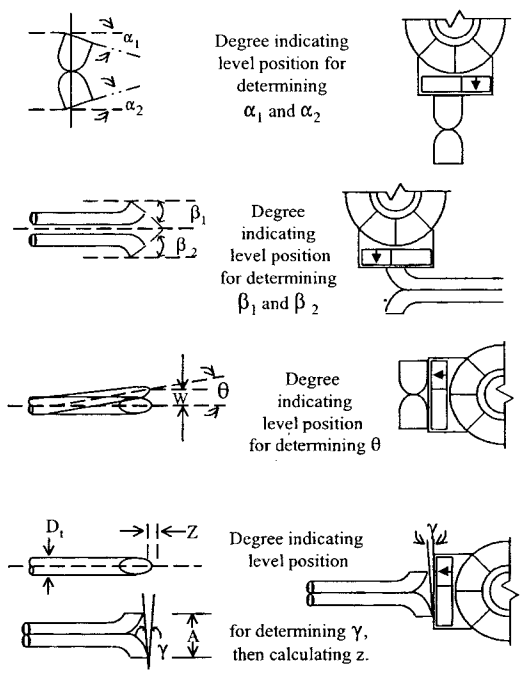

Level and perpendicular?	
Obstruction?	
Damaged?	
α_1 ($-2° \le \alpha_1 \le +2°$)	
α_2 ($-2° \le \alpha_2 \le +2°$)	
β_1 ($-2° \le \beta_1 \le +2°$)	
β_2 ($-2° \le \beta_2 \le +2°$)	
γ	
θ	
$z = A (\tan\gamma)$ [$\le$ 0.5 mm (0.02 in.)]	
$w = A (\tan\theta)$ [$\le$ 0.5 mm (0.02 in.)]	
D_t [$\ge$ 9.5 mm (3/8 in.)]	
A	
$A/2D_t$ ($1.05 \le P_A/D_t \le 1.5$) *	
* Recommended dimensions	

QA/QC Check

Completeness_____ Legibility_____ Accuracy_____

Specifications_____ Reasonableness_____

Certification

I certify that the Type S probe ID _____ meets or exceeds all specifications, criteria, and applicable design features.

Certified by:_____ Date:_____

Table 2G-2. Rotational Position Check

Source:_____ Date:_____

Test Location:_____ Tester(s):_____

Probe Type:_____ Affiliation:_____

Probe ID:_____ Fully-Assembled Probe Length in mm (in.):_____

Position	Angle Comparisons		
Distance of 2nd measurement device from probe head impact port in mm (in.)	1st Device Angle measured by device aligned on the reference scribe line, including algebraic sign (degrees)	2nd Device Angle measured by device mounted at each position to be used during testing, including algebraic sign (degrees)	R_{ADO} Difference between readings by 1st and 2nd angle-measuring devices (degrees)[a]
(Col. A)	(Col. B)	(Col. C)	(Col. C - Col. B)

[a] The algebraic sign must be consistent with section 8.3.2.

Specifications: For the pre-test rotational position check, the value of R_{ADO} at each location along the probe shaft must be determined to within ±1°. In the post-test check, R_{ADO} at each location must remain within ±2° of the value obtained in the pre-test check.

Table 2G-3. Example EPA Method 2G Field Data Form

Source: _____ Date: _____

Source Location: _____ Test Personnel: _____

Measurement Location: _____ Probe Type: _____

Run ID:	
Start Time:	
End Time:	
Pitot Tube ID:	
Pitot Tube Coefficient (C_p):	
Pressure Gauge ID:	
Pressure Gauge Readability:	in. H_2O
Temperature Gauge ID:	
Measurement System Response Time	sec.

Stack Diameter:		
Stack Area:		
Barometric Pressure (P_{bar}):	in. Hg	
Static Pressure (P_g):	in. H_2O	
R_{SLO}		
R_{ADO}		
	Pre-test	Post-test
Pitot Tube Condition: Damage Noted?		
Leak Check Performed?		

Clock Time	Traverse Point	Yaw Angle, including algebraic sign (degrees)	Differential Pressure (Δ P)	Stack or Duct Gas Temperature (° F)

Table 2G-4. Wind Tunnel Velocity Pressure Cross-Check

Wind Tunnel Facility: _____
Date: _____
Wind Tunnel Temperature: _____
Barometric Pressure: _____
Test Point Locations: _____
Lowest Test Velocity in m/sec (ft/sec): _____
Highest Test Velocity in m/sec (ft/sec): _____

Port		Rep.	Velocity Pressure (ΔP_{std}) @ Lowest Test Velocity	Velocity Pressure (ΔP_{std}) @ Highest Test Velocity
Calibration Pitot Tube Location		1		
		2		
		3		
		Average		
Calibration Location Test Points *	1	1		
		2		
		3		
		Average		
		% Difference **		
	2	1		
		2		
		3		
		Average		
		% Difference **		
	..	1		
		2		
		3		
		Average		
		% Difference **		

* Measurements must be taken at all points in the calibration location as specified in section 10.1.1

** Percent Difference = $\frac{(\textit{Calibration Location Test Point Avg} - \textit{Cal. Pitot Tube Location Avg})}{\textit{Cal. Pitot Tube Location Avg}} \times 100\%$

Specification: At each velocity setting, the average velocity pressure obtained at the calibration location shall be within ±2 percent or 0.01 in. H_2O, whichever is less restrictive, of the average velocity pressure obtained at the fixed calibration pitot tube location.

Table 2G-5. Wind Tunnel Axial Flow Verification

Wind Tunnel Facility: _____
Date: _____
Wind Tunnel Temperature: _____
Barometric Pressure: _____
Probe Type/I.D. Used To Conduct Check: _____
Test Point Locations: _____
Lowest Test Velocity in m/sec (ft/sec): _____
Highest Test Velocity in m/sec (ft/sec): _____

Port		@ Lowest Test Velocity		@ Highest Test Velocity	
		Yaw Angle * (degrees)	Pitch Angle * (degrees)	Yaw Angle * (degrees)	Pitch Angle * (degrees)
Calibration Location Test Points **	1				
	2				
	3				
	..				
Calibration Pitot Tube Location					

* When following the procedures in section 10.1.2.1, both the yaw and pitch angles are obtained from the same port. When following the procedures in section 10.1.2.2, the yaw angle is obtained using the port for the tested probe, and the pitch angle is obtained using the port for verification of axial flow.

** Yaw and pitch angle measurements must be taken at all points that define the calibration location (as per the requirements in section 10.1.1)

Specification: At each velocity setting, each measured yaw and pitch angle shall be within ±3° of 0° in accordance with the requirements in section 10.1.2.

Table 2G-6. Yaw Angle Calibration

Probe Type: _____ **Tester(s):** _____

Probe ID: _____ **Affiliation:** _____

Test Location: _____ **Date:** _____

	Repetition 1		Repetition 2	
Nominal Velocity Setting in m/sec (ft/sec)	**θ_{null} (degrees)**	**R_{SLO} (degrees)***	**θ_{null} (degrees)**	**R_{SLO} (degrees)***
_____	_____	_____	_____	_____
_____	_____	_____	_____	_____
_____	_____	_____	_____	_____
_____	_____	_____	_____	_____
_____	_____	_____	_____	_____
_____	_____	_____	_____	_____
_____	_____	_____	_____	_____
_____	_____	_____	_____	_____
_____	_____	_____	_____	_____
Average of all recorded R_{SLO} values:			_____	

* Include magnitude and algebraic sign in accordance with section 10.5.6.

Table 2G-7. Determining the Magnitude of Reference Scribe Line Offset

Probe/Angle-Measuring Device	Magnitude of R_{SLO}
Type S probe with inclinometer	θ_{null}
Type S probe with protractor wheel and pointer	$90° - \theta_{null}$
3-D probe with inclinometer	$90° - \theta_{null}$
3-D probe with protractor wheel and pointer	θ_{null}

Table 2G-8. Probe Calibration for Method 2G

Wind Tunnel Facility: _____
Wind Tunnel Location: _____
Probe Type: _____
Probe ID: _____
Probe Calibration Date: _____
Test Point Location: _____
Ambient Temperature (°F): _____
Barometric Pressure (P_{bar}): _____

Repetition	Low Velocity Setting (ft/sec)	Calibration Pitot		Tested Probe		Calculated C_p or F_2
		ΔP_{std} (in. H_2O)	Temp. (°F)	ΔP or P_1-P_2 (in. H_2O)	Yaw Angle (°)	
1						
2						
3						
					Average ($C_{p(avg\text{-}low)}$) =	

Repetition	High Velocity Setting (ft/sec)	Calibration Pitot		Tested Probe		Calculated C_p or F_2
		ΔP_{std} (in. H_2O)	Temp. (°F)	ΔP or P_1-P_2 (in. H_2O)	Yaw Angle (°)	
1						
2						
3						
					Average ($C_{p(avg\text{-}high)}$) =	

$$\%\ \text{Difference} = \frac{C_{p(avg\text{-}low)} - C_{p(avg\text{-}high)}}{C_{p(avg\text{-}low)}} \times 100\% = _____\%$$

Note: (1) The percent difference between the low and high velocity setting C_p values shall be within ±3 percent.
(2) If calibrating a 3-D probe for this method, the pitch angle setting must be 0°.

METHOD 2H—DETERMINATION OF STACK GAS VELOCITY TAKING INTO ACCOUNT VELOCITY DECAY NEAR THE STACK WALL

1.0 Scope and Application

1.1 This method is applicable in conjunction with Methods 2, 2F, and 2G (40 CFR Part 60, Appendix A) to account for velocity decay near the wall in circular stacks and ducts.

1.2 This method is not applicable for testing stacks and ducts less than 3.3 ft (1.0 m) in diameter.

1.3 Data Quality Objectives. Adherence to the requirements of this method will enhance the quality of the data obtained from air pollutant sampling methods.

2.0 Summary of Method

2.1 A wall effects adjustment factor is determined. It is used to adjust the average stack gas velocity obtained under Method 2, 2F, or 2G of this appendix to take into account velocity decay near the stack or duct wall.

2.2 The method contains two possible procedures: a calculational approach which derives an adjustment factor from velocity measurements and a default procedure which assigns a generic adjustment factor based on the construction of the stack or duct.

2.2.1 The calculational procedure derives a wall effects adjustment factor from velocity measurements taken using Method 2, 2F, or 2G at 16 (or more) traverse points specified under Method 1 of this appendix and a total of eight (or more) wall effects traverse points specified under this method. The calculational procedure based on velocity measurements is not applicable for horizontal circular ducts where build-up of particulate matter or other material in the bottom of the duct is present.

2.2.2 A default wall effects adjustment factor of 0.9900 for brick and mortar stacks and 0.9950 for all other types of stacks and ducts may be used without taking wall effects measurements in a stack or duct.

2.3 When the calculational procedure is conducted as part of a relative accuracy test audit (RATA) or other multiple-run test procedure, the wall effects adjustment factor derived from a single traverse (i.e., single RATA run) may be applied to all runs of the same RATA without repeating the wall effects measurements. Alternatively, wall effects adjustment factors may be derived for several traverses and an average wall effects adjustment factor applied to all runs of the same RATA.

3.0 Definitions.

3.1 *Complete wall effects traverse* means a traverse in which measurements are taken at d_{rem} (see section 3.3) and at 1-in. intervals in each of the four Method 1 equal-area sectors closest to the wall, beginning not farther than 4 in. (10.2 cm) from the wall and extending either (1) across the entire width of the Method 1 equal-area sector or (2) for stacks or ducts where this width exceeds 12 in. (30.5 cm) (i.e., stacks or ducts greater than or equal to 15.6 ft [4.8 m] in diameter), to a distance of not less than 12 in. (30.5 cm) from the wall. Note: Because this method specifies that measurements must be taken at whole number multiples of 1 in. from a stack or duct wall, for clarity numerical quantities in this method are expressed in English units followed by metric units in parentheses. To enhance readability, hyphenated terms such as ''1-in. intervals'' or ''1-in. incremented,'' are expressed in English units only.

3.2 d_{last} Depending on context, d_{last} means either (1) the distance from the wall of the last 1-in. incremented wall effects traverse point or (2) the traverse point located at that distance (see Figure 2H–2).

3.3 d_{rem} Depending on context, d_{rem} means either (1) the distance from the wall of the centroid of the area between d_{last} and the interior edge of the Method 1 equal-area sector closest to the wall or (2) the traverse point located at that distance (see Figure 2H–2).

3.4 *''May,'' ''Must,'' ''Shall,'' ''Should,''* and the imperative form of verbs.

3.4.1 *''May''* is used to indicate that a provision of this method is optional.

3.4.2 *''Must,'' ''Shall,''* and the imperative form of verbs (such as ''record'' or ''enter'') are used to indicate that a provision of this method is mandatory.

3.4.3 *''Should''* is used to indicate that a provision of this method is not mandatory but is highly recommended as good practice.

3.5 *Method 1* refers to 40 CFR part 60, appendix A, ''Method 1—Sample and velocity traverses for stationary sources.''

3.6 *Method 1 exterior equal-area sector and Method 1 equal-area sector closest to the wall* mean any one of the four equal-area sectors that are closest to the wall for a circular stack or duct laid out in accordance with section 2.3.1 of Method 1 (see Figure 2H–1).

3.7 *Method 1 interior equal-area sector* means any of the equal-area sectors other than the Method 1 exterior equal-area sectors (as defined in section 3.6) for a circular stack or duct laid out in accordance with section 2.3.1 of Method 1 (see Figure 2H–1).

3.8 *Method 1 traverse point and Method 1 equal-area traverse point* mean a traverse point located at the centroid of an equal-area sector of a circular stack laid out in accordance with section 2.3.1 of Method 1.

3.9 *Method 2* refers to 40 CFR part 60, appendix A, ''Method 2—Determination of stack gas velocity and volumetric flow rate (Type S pitot tube).''

3.10 *Method 2F* refers to 40 CFR part 60, appendix A, ''Method 2F—Determination of stack gas velocity and volumetric flow rate with three-dimensional probes.''

3.11 *Method 2G* refers to 40 CFR part 60, appendix A, ''Method 2G—Determination of stack gas velocity and volumetric flow rate with two-dimensional probes.''

3.12 *1-in. incremented wall effects traverse point* means any of the wall effects traverse points that are located at 1-in. intervals, i.e., traverse points d_1 through d_{last} (see Figure 2H–2).

3.13 *Partial wall effects traverse* means a traverse in which measurements are taken at fewer than the number of traverse points required for a ''complete wall effects traverse'' (as defined in section 3.1), but are taken at a minimum of two traverse points in each Method 1 equal-area sector closest to the wall, as specified in section 8.2.2.

3.14 *Relative accuracy test audit (RATA)* is a field test procedure performed in a stack or duct in which a series of concurrent measurements of the same stack gas stream is taken by a reference method and an installed monitoring system. A RATA usually consists of series of 9 to 12 sets of such concurrent measurements, each of which is referred to as a RATA run. In a volumetric flow RATA, each reference method run consists of a complete traverse of the stack or duct.

3.15 *Wall effects-unadjusted average velocity* means the average stack gas velocity, not accounting for velocity decay near the wall, as determined in accordance with Method 2, 2F, or 2G for a Method 1 traverse consisting of 16 or more points.

3.16 *Wall effects-adjusted average velocity* means the average stack gas velocity, taking into account velocity decay near the wall, as calculated from measurements at 16 or more Method 1 traverse points and at the additional wall effects traverse points specified in this method.

3.17 *Wall effects traverse point* means a traverse point located in accordance with sections 8.2.2 or 8.2.3 of this method.

4.0 Interferences. [Reserved]

5.0 Safety

5.1 This method may involve hazardous materials, operations, and equipment. This method does not purport to address all of the health and safety considerations associated with its use. It is the responsibility of the user of this method to establish appropriate health and safety practices and to determine the applicability of occupational health and safety regulatory requirements prior to performing this method.

6.0 Equipment and Supplies

6.1 The provisions pertaining to equipment and supplies in the method that is used to take the traverse point measurements (i.e., Method 2, 2F, or 2G) are applicable under this method.

7.0 Reagents and Standards. [Reserved]

8.0 Sample Collection and Analysis

8.1 Default Wall Effects Adjustment Factors. A default wall effects adjustment factor of 0.9900 for brick and mortar stacks and 0.9950 for all other types of stacks and ducts may be used without conducting the following procedures.

8.2 Traverse Point Locations. Determine the location of the Method 1 traverse points in accordance with section 8.2.1 and the location of the traverse points for either a partial wall effects traverse in accordance with section 8.2.2 or a complete wall effects traverse in accordance with section 8.2.3.

8.2.1 Method 1 equal-area traverse point locations. Determine the location of the Method 1 equal-area traverse points for a traverse consisting of 16 or more points using Table 1–2 (Location of Traverse Points in Circular Stacks) of Method 1.

8.2.2 Partial wall effects traverse. For a partial wall effects traverse, measurements must be taken at a minimum of the following two wall effects traverse point locations in all four Method 1 equal-area sectors closest to the wall: (1) 1 in. (2.5 cm) from the wall (except as provided in section 8.2.2.1) and (2) d_{rem}, as determined using Equation 2H–1 or 2H–2 (see section 8.2.2.2).

8.2.2.1 If the probe cannot be positioned at 1 in. (2.5 cm) from the wall (e.g., because of insufficient room to withdraw the probe shaft) or if velocity pressure cannot be detected at 1 in. (2.5 cm) from the wall (for any reason other than build-up of particulate matter in the bottom of a duct), take measurements at the 1-in. incremented wall effects traverse point closest to the wall where the probe can be positioned and velocity pressure can be detected.

8.2.2.2 Calculate the distance of d_{rem} from the wall to within ±¼ in. (6.4 mm) using Equation 2H–1 or Equation 2H–2 (for a 16-point traverse).

$$d_{last} \leq d_b \qquad \text{Eq. 2H-3}$$

Where:

r = the stack or duct radius determined from direct measurement of the stack or duct diameter in accordance with section 8.6 of Method 2F or Method 2G, in. (cm);

p = the number of Method 1 equal-area traverse points on a diameter, $p \geq 8$ (e.g., for a 16-point traverse, p = 8); d_{last} and d_{rem} are defined in sections 3.2 and 3.3 respectively, in. (cm).

For a 16-point Method 1 traverse, Equation 2H–1 becomes:

$$d_{rem} = r - \sqrt{\frac{7}{8}r^2 - rd_{last} + \frac{1}{2}d_{last}^2} \qquad \text{Eq. 2H-2}$$

8.2.2.3 Measurements may be taken at any number of additional wall effects traverse points, with the following provisions.

(a) d_{last} must not be closer to the center of the stack or duct than the distance of the interior edge (boundary), d_b, of the Method 1 equal-area sector closest to the wall (see Figure 2H–2 or 2H–3). That is,

Where:

$$d_b = r\left(1 - \sqrt{1 - \frac{2}{p}}\right) \qquad \text{Eq. 2H-4}$$

Table 2H–1 shows d_b as a function of the stack or duct radius, *r*, for traverses ranging from 16 to 48 points (i.e., for values of *p* ranging from 8 to 24).

(b) Each point must be located at a distance that is a whole number (e.g., 1, 2, 3) multiple of 1 in. (2.5 cm).

(c) Points do not have to be located at consecutive 1-in. intervals. That is, one or more 1-in. incremented points may be skipped. For example, it would be acceptable for points to be located at 1 in. (2.5 cm), 3 in. (7.6 cm), 5 in. (12.7 cm), d_{last}, and d_{rem}; or at 1 in. (2.5 cm), 2 in. (5.1 cm), 4 in. (10.2 cm), 7 in. (17.8 cm), d_{last}, and d_{rem}. Follow the instructions in section 8.7.1.2 of this method for recording results for wall effects traverse points that are skipped. It should be noted that the full extent of velocity decay may not be accounted for if measurements are not taken at all 1-in. incremented points close to the wall.

8.2.3 Complete wall effects traverse. For a complete wall effects traverse, measurements must be taken at the following points in all four Method 1 equal-area sectors closest to the wall.

(a) The 1-in. incremented wall effects traverse point closest to the wall where the probe can be positioned and velocity can be detected, but no farther than 4 in. (10.2 cm) from the wall.

(b) Every subsequent 1-in. incremented wall effects traverse point out to the interior edge of the Method 1 equal-area sector or to 12 in. (30.5 cm) from the wall, whichever comes first. Note: In stacks or ducts with diameters greater than 15.6 ft (4.8 m) the interior edge of the Method 1 equal-area sector is farther from the wall than 12 in. (30.5 cm).

(c) d_{rem}, as determined using Equation 2H–1 or 2H–2 (as applicable). Note: For a complete traverse of a stack or duct with a diameter less than 16.5 ft (5.0 m), the distance between d_{rem} and d_{last} is less than or equal to ½ in. (12.7 mm). As discussed in section 8.2.4.2, when the distance between d_{rem} and d_{last} is less than or equal to ½ in. (12.7 mm), the velocity measured at d_{last} may be used for d_{rem}. Thus, it is not necessary to calculate the distance of d_{rem} or to take measurements at d_{rem} when conducting a complete traverse of a stack or duct with a diameter less than 16.5 ft (5.0 m).

8.2.4 Special considerations. The following special considerations apply when the distance between traverse points is less than or equal to ½ in. (12.7 mm).

8.2.4.1 A wall effects traverse point and the Method 1 traverse point. If the distance between a wall effects traverse point and the Method 1 traverse point is less than or equal to ½ in. (12.7 mm), taking measurements at both points is allowed but not required or recommended; if measurements are taken at only one point, take the measurements at the point that is farther from the wall and use the velocity obtained at that point as the value for both points (see sections 8.2.3 and 9.2 for related requirements).

8.2.4.2 d_{rem} and d_{last}. If the distance between d_{rem} and d_{last} is less than or equal to ½ in. (12.7 mm), taking measurements at d_{rem} is allowed but not required or recommended; if measurements are not taken at d_{rem}, the measured velocity value at d_{last} must be used as the value for both d_{last} and d_{rem}.

8.3 Traverse Point Sampling Order and Probe Selection. Determine the sampling order of the Method 1 and wall effects traverse points and select the appropriate probe for the measurements, taking into account the following considerations.

8.3.1 Traverse points on any radius may be sampled in either direction (i.e., from the wall toward the center of the stack or duct, or vice versa).

8.3.2 To reduce the likelihood of velocity variations during the time of the traverse and the attendant potential impact on the wall effects-adjusted and unadjusted average velocities, the following provisions of this method shall be met.

8.3.2.1 Each complete set of Method 1 and wall effects traverse points accessed from the same port shall be sampled without interruption. Unless traverses are performed simultaneously in all ports using separate probes at each port, this provision disallows first sampling all Method 1 points at all ports and then sampling all the wall effects points.

8.3.2.2 The entire integrated Method 1 and wall effects traverse across all test ports shall be as short as practicable, consistent with the measurement system response time

(see section 8.4.1.1) and sampling (see section 8.4.1.2) provisions of this method.

8.3.3 It is recommended but not required that in each Method 1 equal-area sector closest to the wall, the Method 1 equal-area traverse point should be sampled in sequence between the adjacent wall effects traverse points. For example, for the traverse point configuration shown in Figure 2H–2, it is recommended that the Method 1 equal-area traverse point be sampled between d_{last} and d_{rem}. In this example, if the traverse is conducted from the wall toward the center of the stack or duct, it is recommended that measurements be taken at points in the following order: d_1, d_2, d_{last}, the Method 1 traverse point, d_{rem}, and then at the traverse points in the three Method 1 interior equal-area sectors.

8.3.4 The same type of probe must be used to take measurements at all Method 1 and wall effects traverse points. However, different copies of the same type of probe may be used at different ports (e.g., Type S probe 1 at port A, Type S probe 2 at port B) or at different traverse points accessed from a particular port (e.g., Type S probe 1 for Method 1 interior traverse points accessed from port A, Type S probe 2 for wall effects traverse points and the Method 1 exterior traverse point accessed from port A). The identification number of the probe used to obtain measurements at each traverse point must be recorded.

8.4 Measurements at Method 1 and Wall Effects Traverse Points. Conduct measurements at Method 1 and wall effects traverse points in accordance with Method 2, 2F, or 2G and in accordance with the provisions of the following subsections (some of which are included in Methods 2F and 2G but not in Method 2), which are particularly important for wall effects testing.

8.4.1 Probe residence time at wall effects traverse points. Due to the steep temperature and pressure gradients that can occur close to the wall, it is very important for the probe residence time (i.e., the total time spent at a traverse point) to be long enough to ensure collection of representative temperature and pressure measurements. The provisions of Methods 2F and 2G in the following subsections shall be observed.

8.4.1.1 System response time. Determine the response time of each probe measurement system by inserting and positioning the ''cold'' probe (at ambient temperature and pressure) at any Method 1 traverse point. Read and record the probe differential pressure, temperature, and elapsed time at 15-second intervals until stable readings for both pressure and temperature are achieved. The response time is the longer of these two elapsed times. Record the response time.

8.4.1.2 Sampling. At the start of testing in each port (i.e., after a probe has been inserted into the stack gas stream), allow at least the response time to elapse before beginning to take measurements at the first traverse point accessed from that port. Provided that the probe is not removed from the stack gas stream, measurements may be taken at subsequent traverse points accessed from the same test port without waiting again for the response time to elapse.

8.4.2 Temperature measurement for wall effects traverse points. Either (1) take temperature measurements at each wall effects traverse point in accordance with the applicable provisions of Method 2, 2F, or 2G; or (2) use the temperature measurement at the Method 1 traverse point closest to the wall as the temperature measurement for all the wall effects traverse points in the corresponding equal-area sector.

8.4.3 Non-detectable velocity pressure at wall effects traverse points. If the probe cannot be positioned at a wall effects traverse point or if no velocity pressure can be detected at a wall effects point, measurements shall be taken at the first subsequent wall effects traverse point farther from the wall where velocity can be detected. Follow the instructions in section 8.7.1.2 of this method for recording results for wall effects traverse points where velocity pressure cannot be detected. It should be noted that the full extent of velocity decay may not be accounted for if measurements are not taken at the 1-in. incremented wall effects traverse points closest to the wall.

8.5 Data Recording. For each wall effects and Method 1 traverse point where measurements are taken, record all pressure, temperature, and attendant measurements prescribed in section 3 of Method 2 or section 8.0 of Method 2F or 2G, as applicable.

8.6 Point Velocity Calculation. For each wall effects and Method 1 traverse point, calculate the point velocity value (v_i) in accordance with sections 12.1 and 12.2 of Method 2F for tests using Method 2F and in accordance with sections 12.1 and 12.2 of Method 2G for tests using Method 2 and Method 2G. (Note that the term (v_i) in this method corresponds to the term ($v_{a(i)}$) in Methods 2F and 2G.) When the equations in the indicated sections of Method 2G are used in deriving point velocity values for Method 2 tests, set the value of the yaw angles appearing in the equations to 0°.

8.7 Tabulating Calculated Point Velocity Values for Wall Effects Traverse Points. Enter the following values in a hardcopy or electronic form similar to Form 2H–1 (for 16-point Method 1 traverses) or Form 2H–2 (for Method 1 traverses consisting of more than 16 points). A separate form must be completed for each of the four Method 1 equal-area sectors that are closest to the wall.

(a) Port ID (e.g., A, B, C, or D)

(b) Probe type

(c) Probe ID

(d) Stack or duct diameter in ft (m) (determined in accordance with section 8.6 of Method 2F or Method 2G)

(e) Stack or duct radius in in. (cm)

(f) Distance from the wall of wall effects traverse points at 1-in. intervals, in ascending order starting with 1 in. (2.5 cm) (column A of Form 2H–1 or 2H–2)

(g) Point velocity values (v_d) for 1-in. incremented traverse points (see section 8.7.1), including d_{last} (see section 8.7.2)

(h) Point velocity value (v_{drem}) at d_{rem} (see section 8.7.3).

8.7.1 Point velocity values at wall effects traverse points other than d_{last}. For every 1-in. incremented wall effects traverse point other than d_{last}, enter in column B of Form 2H–1 or 2H–2 either the velocity measured at the point (see section 8.7.1.1) or the velocity measured at the first subsequent traverse point farther from the wall (see section 8.7.1.2). A velocity value must be entered in column B of Form 2H–1 or 2H–2 for every 1-in. incremented traverse point from d_1 (representing the wall effects traverse point 1 in. [2.5 cm] from the wall) to d_{last}.

8.7.1.1 For wall effects traverse points where the probe can be positioned and velocity pressure can be detected, enter the value obtained in accordance with section 8.6.

8.7.1.2 For wall effects traverse points that were skipped [see section 8.2.2.3(c)] and for points where the probe cannot be positioned or where no velocity pressure can be detected, enter the value obtained at the first subsequent traverse point farther from the wall where velocity pressure was detected and measured and follow the entered value with a ''flag,'' such as the notation ''NM,'' to indicate that ''no measurements'' were actually taken at this point.

8.7.2 Point velocity value at d_{last}. For d_{last}, enter in column B of Form 2H–1 or 2H–2 the measured value obtained in accordance with section 8.6.

8.7.3 Point velocity value (v_{drem}) at d_{rem}. Enter the point velocity value obtained at d_{rem} in column G of row 4a in Form 2H–1 or 2H–2. If the distance between d_{rem} and d_{last} is less than or equal to ½ in. (12.7 mm), the measured velocity value at d_{last} may be used as the value at d_{rem} (see section 8.2.4.2).

9.0 Quality Control.

9.1 Particulate Matter Build-up in Horizontal Ducts. Wall effects testing of horizontal circular ducts should be conducted only if build-up of particulate matter or other material in the bottom of the duct is not present.

9.2 Verifying Traverse Point Distances. In taking measurements at wall effects traverse points, it is very important for the probe impact pressure port to be positioned as close as practicable to the traverse point locations in the gas stream. For this reason, before beginning wall effects testing, it is important to calculate and record the traverse point positions that will be marked on each probe for each port, taking into account the distance that each port nipple (or probe mounting flange for automated probes) extends out of the stack and any extension of the port nipple (or mounting flange) into the gas stream. To ensure that traverse point positions are properly identified, the following procedures should be performed on each probe used.

9.2.1 Manual probes. Mark the probe insertion distance of the wall effects and Method 1 traverse points on the probe sheath so that when a mark is aligned with the outside face of the stack port, the probe impact port is located at the calculated distance of the traverse point from the stack inside wall. The use of different colored marks is recommended for designating the wall effects and Method 1 traverse points. Before the first use of each probe, check to ensure that the distance of each mark from the center of the probe impact pressure port agrees with the previously calculated traverse point positions to within ±¼ in. (6.4 mm).

9.2.2 Automated probe systems. For automated probe systems that mechanically position the probe head at prescribed traverse point positions, activate the system with the probe assemblies removed from the test ports and sequentially extend the probes to the programmed location of each wall effects traverse point and the Method 1 traverse points. Measure the distance between the center of the probe impact pressure port and the inside of the probe assembly mounting flange for each traverse point. The measured distances must agree with the previously calculated traverse point positions to within ±¼ in. (6.4 mm).

9.3 Probe Installation. Properly sealing the port area is particularly important in taking measurements at wall effects traverse points. For testing involving manual probes, the area between the probe sheath and the port should be sealed with a tightly fitting flexible seal made of an appropriate material such as heavy cloth so that leakage is minimized. For automated probe systems, the probe assembly mounting flange area should be checked to verify that there is no leakage.

9.4 Velocity Stability. This method should be performed only when the average gas velocity in the stack or duct is relatively constant over the duration of the test. If the average gas velocity changes significantly during the course of a wall effects test, the test results should be discarded.

10.0 Calibration

10.1 The calibration coefficient(s) or curves obtained under Method 2, 2F, or 2G and used to perform the Method 1 traverse are applicable under this method.

11.0 Analytical Procedure

11.1 Sample collection and analysis are concurrent for this method (see section 8).

12.0 Data Analysis and Calculations

12.1 The following calculations shall be performed to obtain a wall effects adjustment factor (*WAF*) from (1) the wall effects-unadjusted average velocity (*T4avg*), (2) the replacement velocity (ve_j) for each of the four Method 1 sectors closest to the wall, and (3) the average stack gas velocity that accounts for velocity decay near the wall (v_{avg}).

12.2 Nomenclature. The following terms are listed in the order in which they appear in Equations 2H–5 through 2H–21.

v_{avg}=the average stack gas velocity, unadjusted for wall effects, actual ft/sec (m/sec);

vi_i=stack gas point velocity value at Method 1 interior equal-area sectors, actual ft/sec (m/sec);

ve_j=stack gas point velocity value, unadjusted for wall effects, at Method 1 exterior equal-area sectors, actual ft/sec (m/sec);

i=index of Method 1 interior equal-area traverse points;

j=index of Method 1 exterior equal-area traverse points;

n=total number of traverse points in the Method 1 traverse;

$vdec_d$=the wall effects decay velocity for a sub-sector located between the traverse points at distances $d-1$ (in metric units, $d-2.5$) and d from the wall, actual ft/sec (m/sec);

v_d=the measured stack gas velocity at distance d from the wall, actual ft/sec (m/sec); Note: v_0=0;

d=the distance of a 1-in. incremented wall effects traverse point from the wall, for traverse points d_1 through d_{last}, in. (cm);

A_d=the cross-sectional area of a sub-sector located between the traverse points at distances $d-1$ (in metric units, $d-2.5$) and d from the wall, in.^{2} (cm^2) (e.g., sub-sector A_2 shown in Figures 2H–3 and 2H–4);

r=the stack or duct radius, in. (cm);

Q_d=the stack gas volumetric flow rate for a sub-sector located between the traverse points at distances $d-1$ (in metric units, $d-2.5$) and d from the wall, actual ft-in.^{2}/sec (m-cm^2/sec);

$Q_{d_1 \rightarrow d_{last}}$= the total stack gas volumetric flow rate for all sub-sectors located between the wall and d_{last}, actual ft-in.^{2}/sec (m-cm^2/sec);

d_{last}=the distance from the wall of the last 1-in. incremented wall effects traverse point, in. (cm);

A_{drem}=the cross-sectional area of the sub-sector located between d_{last} and the interior edge of the Method 1 equal-area sector closest to the wall, in.^{2} (cm^2) (see Figure 2H–4);

p=the number of Method 1 traverse points per diameter, $p \geq 8$ (e.g., for a 16-point traverse, p=8);

d_{rem}=the distance from the wall of the centroid of the area between d_{last} and the interior edge of the Method 1 equal-area sector closest to the wall, in. (cm);

Q_{drem}=the total stack gas volumetric flow rate for the sub-sector located between d_{last} and the interior edge of the Method 1 equal-area sector closest to the wall, actual ft-in.^{2}/sec (m-cm^2/sec);

v_{drem}=the measured stack gas velocity at distance d_{rem} from the wall, actual ft/sec (m/sec);

Q_T=the total stack gas volumetric flow rate for the Method 1 equal-area sector closest to the wall, actual ft-in.^{2}/sec (m-cm^2/sec);

ve_j=the replacement stack gas velocity for the Method 1 equal-area sector closest to the wall, i.e., the stack gas point velocity value, adjusted for wall effects, for the jth Method 1 equal-area sector closest to the wall, actual ft/sec (m/sec);

v_{avg}=the average stack gas velocity that accounts for velocity decay near the wall, actual ft/sec (m/sec);

WAF=the wall effects adjustment factor derived from v_{avg} and v_{avg} for a single traverse, dimensionless;

v_{final}=the final wall effects-adjusted average stack gas velocity that replaces the unadjusted average stack gas velocity obtained using Method 2, 2F, or 2G for a field test consisting of a single traverse, actual ft/sec (m/sec);

WAF=the wall effects adjustment factor that is applied to the average velocity, unadjusted for wall effects, in order to obtain the final wall effects-adjusted stack gas velocity, v_{final} or, $v_{final(k)}$, dimensionless;

$v_{final(k)}$=the final wall effects-adjusted average stack gas velocity that replaces the unadjusted average stack gas velocity obtained using Method 2, 2F, or 2G on run k of a RATA or other multiple-run field test procedure, actual ft/sec (m/sec);

$v_{avg(k)}$=the average stack gas velocity, obtained on run k of a RATA or other multiple-run procedure, unadjusted for velocity decay near the wall, actual ft/sec (m/sec);

k=index of runs in a RATA or other multiple-run procedure.

12.3 Calculate the average stack gas velocity that does not account for velocity decay near the wall (v_{avg}) using Equation 2H–5.

$$v_{avg} = \frac{\left(\sum_{i=1}^{n-4} vi_i + \sum_{j=1}^{4} ve_j\right)}{n} \qquad \text{Eq. 2H-5}$$

(Note that v_{avg} in Equation 2H–5 is the same as $v_{(a)avg}$ in Equations 2F–9 and 2G–8 in Methods 2F and 2G, respectively.)

For a 16-point traverse, Equation 2H–5 may be written as follows:

$$v_{avg} = \frac{\left(\sum_{i=1}^{12} vi_i + \sum_{j=1}^{4} ve_j\right)}{16} \qquad \text{Eq. 2H-6}$$

12.4 Calculate the replacement velocity, ve_j, for each of the four Method 1 equal-area sectors closest to the wall using the procedures described in sections 12.4.1 through 12.4.8. Forms 2H–1 and 2H–2 provide sample tables that may be used in either hardcopy or spreadsheet format to perform the calculations described in sections 12.4.1 through 12.4.8. Forms 2H–3 and 2H–4 provide examples of Form 2H–1 filled in for partial and complete wall effects traverses.

12.4.1 Calculate the average velocity (designated the ''decay velocity,'' $vdec_d$) for each sub-sector located between the wall and d_{last} (see Figure 2H–3) using Equation 2H–7.

$$vdec_d = \frac{v_{d-1} + v_d}{2} \qquad \text{Eq. 2H-7}$$

For each line in column A of Form 2H–1 or 2H–2 that contains a value of d, enter the corresponding calculated value of $vdec_d$ in column C.

12.4.2 Calculate the cross-sectional area between the wall and the first 1-in. incremented wall effects traverse point and between successive 1-in. incremented wall effects traverse points, from the wall to d_{last} (see Figure 2H–3), using Equation 2H–8.

$$A_d = \frac{1}{4}\pi(r - d + 1)^2 - \frac{1}{4}\pi(r - d)^2 \qquad \text{Eq. 2H-8}$$

For each line in column A of Form 2H–1 or 2H–2 that contains a value of d, enter the value of the expression $\frac{1}{4}\pi(r-d+1)^2$ in column D, the value of the expression $\frac{1}{4}\pi(r-d)^2$ in column E, and the value of A_d in column F. Note that Equation 2H–8 is designed for use only with English units (in.). If metric units (cm) are used, the first term, $\frac{1}{4}\pi(r-d+1)^2$, must be changed to $\frac{1}{4}\pi(r-d+2.5)^2$. This change must also be made in column D of Form 2H–1 or 2H–2.

12.4.3 Calculate the volumetric flow through each cross-sectional area derived in section 12.4.2 by multiplying the values of $vdec_d$, derived according to section 12.4.1, by the cross-sectional areas derived in section 12.4.2 using Equation 2H–9.

$$Q_d = vdec_d \times A_d \qquad \text{Eq. 2H-9}$$

For each line in column A of Form 2H–1 or 2H–2 that contains a value of d, enter the corresponding calculated value of Q_d in column G.

12.4.4 Calculate the total volumetric flow through all sub-sectors located between the wall and d_{last}, using Equation 2H–10.

$$Q_{d_1 \to d_{last}} = \sum_{d=1}^{d_{last}} Q_d \qquad \text{Eq. 2H-10}$$

Enter the calculated value of $Q_{d_1 \to d_{last}}$ in line 3 of column G of Form 2H–1 or 2H–2.

12.4.5 Calculate the cross-sectional area of the sub-sector located between d_{last} and the interior edge of the Method 1 equal-area sector (e.g., sub-sector A_{drem} shown in Figures 2H–3 and 2H–4) using Equation 2H–11.

$$A_{drem} = \frac{1}{4}\pi\left(r - d_{last}\right)^2 - \frac{p-2}{4p}\pi(r)^2 \qquad \text{Eq. 2H-11}$$

For a 16-point traverse (eight points per diameter), Equation 2H–11 may be written as follows:

$$A_{drem} = \frac{1}{4}\pi\left(r - d_{last}\right)^2 - \frac{3}{16}\pi(r)^2 \qquad \text{Eq. 2H-12}$$

Enter the calculated value of A_{drem} in line 4b of column G of Form 2H–1 or 2H–2.

12.4.6 Calculate the volumetric flow for the sub-sector located between d_{last} and the interior edge of the Method 1 equal-area sector, using Equation 2H–13.

$$Q_{drem} = v_{drem} \times A_{drem} \qquad \text{Eq. 2H-13}$$

In Equation 2H–13, v_{drem} is either (1) the measured velocity value at d_{rem} or (2) the measured velocity at d_{last}, if the distance between d_{rem} and d_{last} is less than or equal to ½ in. (12.7 mm) and no velocity measurement is taken at d_{rem} (see section 8.2.4.2). Enter the calculated value of Q_{drem} in line 4c of column G of Form 2H–1 or 2H–2.

12.4.7 Calculate the total volumetric flow for the Method 1 equal-area sector closest to the wall, using Equation 2H–14.

$$Q_T = Q_{d_1 \to d_{last}} + Q_{drem} \qquad \text{Eq. 2H-14}$$

Enter the calculated value of Q_T in line 5a of column G of Form 2H–1 or 2H–2.

12.4.8 Calculate the wall effects-adjusted replacement velocity value for the Method 1 equal-area sector closest to the wall, using Equation 2H–15.

$$\hat{v}e_j = \frac{Q_T}{\frac{1}{2p}\pi(r)^2} \qquad \text{Eq. 2H-15}$$

For a 16-point traverse (eight points per diameter), Equation 2H–15 may be written as follows:

$$\hat{v}e_j = \frac{Q_T}{\frac{1}{16}\pi(r)^2} \qquad \text{Eq. 2H-16}$$

Enter the calculated value of $\hat{v}e_j$ in line 5B of column G of Form 2H–1 or 2H–2.

12.5 Calculate the wall effects-adjusted average velocity, v_{avg}, by replacing the four values of ve_j shown in Equation 2H–5 with the four wall effects-adjusted replacement velocity values, ve_j, calculated according to section 12.4.8, using Equation 2H–17.

$$\hat{v}_{avg} = \frac{\left(\sum_{i=1}^{n-4} vi_i + \sum_{j=1}^{4} \hat{v}e_j\right)}{n} \qquad \text{Eq. 2H-17}$$

For a 16-point traverse, Equation 2H–17 may be written as follows:

$$\hat{v}_{avg} = \frac{\left(\sum_{i=1}^{12} vi_i + \sum_{j=1}^{4} \hat{v}e_j\right)}{16} \qquad \text{Eq. 2H-18}$$

12.6 Calculate the wall effects adjustment factor, WAF, using Equation 2H–19.

$$WAF = \frac{\hat{v}_{avg}}{v_{avg}} \qquad \text{Eq. 2H-19}$$

12.6.1 Partial wall effects traverse. If a partial wall effects traverse (see section 8.2.2) is conducted, the value obtained from Equation 2H–19 is acceptable and may be reported as the wall effects adjustment factor provided that the value is greater than or equal to 0.9800. If the value is less than 0.9800, it shall not be used and a wall effects adjustment factor of 0.9800 may be used instead.

12.6.2 Complete wall effects traverse. If a complete wall effects traverse (see section 8.2.3) is conducted, the value obtained from Equation 2H–19 is acceptable and may be reported as the wall effects adjustment factor provided that the value is greater than or equal to 0.9700. If the value is less than 0.9700, it shall not be used and a wall effects adjustment factor of 0.9700 may be used instead. If the wall effects adjustment factor for a particular stack or duct is less than 0.9700, the tester may (1) repeat the wall effects test, taking measurements at more Method 1 traverse points and (2) recalculate the wall effects adjustment factor from these measurements, in an attempt to obtain a wall effects adjustment factor that meets the 0.9700 specification and completely characterizes the wall effects.

12.7 Applying a Wall Effects Adjustment Factor. A default wall effects adjustment

factor, as specified in section 8.1, or a calculated wall effects adjustment factor meeting the requirements of section 12.6.1 or 12.6.2 may be used to adjust the average stack gas velocity obtained using Methods 2, 2F, or 2G to take into account velocity decay near the wall of circular stacks or ducts. Default wall effects adjustment factors specified in section 8.1 and calculated wall effects adjustment factors that meet the requirements of section 12.6.1 and 12.6.2 are summarized in Table 2H–2.

12.7.1 Single-run tests. Calculate the final wall effects-adjusted average stack gas velocity for field tests consisting of a single traverse using Equation 2H–20.

$$\hat{v}_{final} = \overline{WAF} \times v_{avg} \qquad \text{Eq. 2H-20}$$

The wall effects adjustment factor, WAF, shown in Equation 2H–20, may be (1) a default wall effects adjustment factor, as specified in section 8.1, or (2) a calculated adjustment factor that meets the specifications in sections 12.6.1 or 12.6.2. If a calculated adjustment factor is used in Equation 2H–20, the factor must have been obtained during the same traverse in which v_{avg} was obtained.

12.7.2 RATA or other multiple run test procedure. Calculate the final wall effects-adjusted average stack gas velocity for any run *k* of a RATA or other multiple-run procedure using Equation 2H–21.

$$\hat{v}_{final(k)} = \overline{WAF} \times v_{avg(k)} \qquad \text{Eq. 2H-21}$$

The wall effects adjustment factor, WAF, shown in Equation 2H–21 may be (1) a default wall effects adjustment factor, as specified in section 8.1; (2) a calculated adjustment factor (meeting the specifications in sections 12.6.1 or 12.6.2) obtained from any single run of the RATA that includes run *k*; or (3) the arithmetic average of more than one WAF (each meeting the specifications in sections 12.6.1 or 12.6.2) obtained through wall effects testing conducted during several runs of the RATA that includes run *k*. If wall effects adjustment factors (meeting the specifications in sections 12.6.1 or 12.6.2) are determined for more than one RATA run, the arithmetic average of all of the resulting calculated wall effects adjustment factors must be used as the value of *WAF* and applied to all runs of that RATA. If a calculated, not a default, wall effects adjustment factor is used in Equation 2H–21, the average velocity unadjusted for wall effects, $v_{avg(k)}$ must be obtained from runs in which the number of Method 1 traverse points sampled does not exceed the number of Method 1 traverse points in the runs used to derive the wall effects adjustment factor, WAF, shown in Equation 2H–21.

12.8 Calculating Volumetric Flow Using Final Wall Effects-Adjusted Average Velocity Value. To obtain a stack gas flow rate that accounts for velocity decay near the wall of circular stacks or ducts, replace v_s in Equation 2–10 in Method 2, or $v_{a(avg)}$ in Equations 2F–10 and 2F–11 in Method 2F, or $v_{a(avg)}$ in Equations 2G–9 and 2G–10 in Method 2G with one of the following.

12.8.1 For single-run test procedures, use the final wall effects-adjusted average stack gas velocity, v_{final}, calculated according to Equation 2H–20.

12.8.2 For RATA and other multiple run test procedures, use the final wall effects-adjusted average stack gas velocity, $v_{final(k)}$, calculated according to Equation 2H–21.

13.0 Method Performance. [Reserved]

414.0 Pollution Prevention. [Reserved]

15.0 Waste Management. [Reserved]

16.0 Reporting

16.1 Field Test Reports. Field test reports shall be submitted to the Agency according to the applicable regulatory requirements. When Method 2H is performed in conjunction with Method 2, 2F, or 2G to derive a wall effects adjustment factor, a single consolidated Method 2H/2F (or 2H/2G) field test report should be prepared. At a minimum, the consolidated field test report should contain (1) all of the general information, and data for Method 1 points, specified in section 16.0 of Method 2F (when Method 2H is used in conjunction with Method 2F) or section 16.0 of Method 2G (when Method 2H is used in conjunction with Method 2 or 2G) and (2) the additional general information, and data for Method 1 points and wall effects points, specified in this section (some of which are included in section 16.0 of Methods 2F and 2G and are repeated in this section to ensure complete reporting for wall effects testing).

16.1.1 Description of the source and site. The field test report should include the descriptive information specified in section 16.1.1 of Method 2F (when using Method 2F) or 2G (when using either Method 2 or 2G). It should also include a description of the stack or duct's construction material along with the diagram showing the dimensions of the stack or duct at the test port elevation prescribed in Methods 2F and 2G. The diagram should indicate the location of all wall effects traverse points where measurements were taken as well as the Method 1 traverse points. The diagram should provide a unique identification number for each wall effects and Method 1 traverse point, its distance from the wall, and its location relative to the probe entry ports.

16.1.2 Field test forms. The field test report should include a copy of Form 2H–1, 2H–2, or an equivalent for each Method 1 exterior equal-area sector.

16.1.3 Field test data. The field test report should include the following data for the Method 1 and wall effects traverse.

16.1.3.1 Data for each traverse point. The field test report should include the values specified in section 16.1.3.2 of Method 2F (when using Method 2F) or 2G (when using either Method 2 or 2G) for each Method 1 and wall effects traverse point. The provisions of section 8.4.2 of Method 2H apply to the temperature measurements reported for wall effects traverse points. For each wall effects and Method 1 traverse point, the following values should also be included in the field test report.

(a) Traverse point identification number for each Method 1 and wall effects traverse point.

(b) Probe type.

(c) Probe identification number.

(d) Probe velocity calibration coefficient (i.e., C_p when Method 2 or 2G is used; F_2 when Method 2F is used).

For each Method 1 traverse point in an exterior equal-area sector, the following additional value should be included.

(e) Calculated replacement velocity, $\hat{v}e_j$, accounting for wall effects.

16.1.3.2 Data for each run. The values specified in section 16.1.3.3 of Method 2F (when using Method 2F) or 2G (when using either Method 2 or 2G) should be included in the field test report once for each run. The provisions of section 12.8 of Method 2H apply for calculating the reported gas volumetric flow rate. In addition, the following Method 2H run values should also be included in the field test report.

(a) Average velocity for run, accounting for wall effects, v_{avg}.

(b) Wall effects adjustment factor derived from a test run, WAF.

16.1.3.3 Data for a complete set of runs. The values specified in section 16.1.3.4 of Method 2F (when using Method 2F) or 2G (when using either Method 2 or 2G) should be included in the field test report once for each complete set of runs. In addition, the field test report should include the wall effects adjustment factor, *W*AF, that is applied in accordance with section 12.7.1 or 12.7.2 to obtain the final wall effects-adjusted average stack gas velocity v_{final} or $v_{final(k)}$.

16.1.4 Quality assurance and control. Quality assurance and control procedures, specifically tailored to wall effects testing, should be described.

16.2 Reporting a Default Wall Effects Adjustment Factor. When a default wall effects adjustment factor is used in accordance with section 8.1 of this method, its value and a description of the stack or duct's construction material should be reported in lieu of submitting a test report.

17.0 *References.*

(1) 40 CFR Part 60, Appendix A, Method 1'Sample and velocity traverses for stationary sources.

(2) 40 CFR Part 60, Appendix A, Method 2'Determination of stack gas velocity and volumetric flow rate (Type S pitot tube).

(3) 40 CFR Part 60, Appendix A, Method 2F'Determination of stack gas velocity and volumetric flow rate with three-dimensional probes.

(4) 40 CFR Part 60, Appendix A, Method 2G'Determination of stack gas velocity and volumetric flow rate with two-dimensional probes.

(5) 40 CFR Part 60, Appendix A, Method 3'Gas analysis for carbon dioxide, oxygen, excess air, and dry molecular weight.

(6) 40 CFR Part 60, Appendix A, Method 3A—Determination of oxygen and carbon dioxide concentrations in emissions from stationary sources (instrumental analyzer procedure).

(7) 40 CFR Part 60, Appendix A, Method 4—Determination of moisture content in stack gases.

(8) Emission Measurement Center (EMC) Approved Alternative Method (ALT–011) ''Alternative Method 2 Thermocouple Calibration Procedure.''

(9) The Cadmus Group, Inc., 1998, ''EPA Flow Reference Method Testing and Analysis: Data Report, Texas Utilities, DeCordova Steam Electric Station, Volume I: Test Description and Appendix A (Data Distribution Package),'' EPA/430–R–98–015a.

(10) The Cadmus Group, Inc., 1998, ''EPA Flow Reference Method Testing and Analysis: Data Report, Texas Utilities, Lake Hubbard Steam Electric Station, Volume I: Test Description and Appendix A (Data Distribution Package),'' EPA/430–R–98–017a.

(11) The Cadmus Group, Inc., 1998, ''EPA Flow Reference Method Testing and Analysis: Data Report, Pennsylvania Electric Co., G.P.U. Genco Homer City Station: Unit 1, Volume I: Test Description and Appendix A (Data Distribution Package),'' EPA/430–R–98–018a.

(12) The Cadmus Group, Inc., May 1999, ''EPA Flow Reference Method Testing and Analysis: Findings Report,'' EPA/430–R–99–009.

(13) The Cadmus Group, Inc., 1997, ''EPA Flow Reference Method Testing and Analysis: Wind Tunnel Experimental Results,'' EPA/430–R–97–013.

(14) National Institute of Standards and Technology, 1998, ''Report of Special Test of Air Speed Instrumentation, Four Prandtl Probes, Four S-Type Probes, Four French Probes, Four Modified Kiel Probes,'' Prepared for the U.S. Environmental Protection Agency under IAG No. DW13938432–01–0.

(15) National Institute of Standards and Technology, 1998, ''Report of Special Test of Air Speed Instrumentation, Five

Autoprobes,'' Prepared for the U.S. Environmental Protection Agency under IAG No. DW13938432–01–0.

(16) National Institute of Standards and Technology, 1998, ''Report of Special Test of Air Speed Instrumentation, Eight Spherical Probes,'' Prepared for the U.S. Environmental Protection Agency under IAG No. DW13938432–01–0.

(17) National Institute of Standards and Technology, 1998, ''Report of Special Test of Air Speed Instrumentation, Four DAT Probes,'' Prepared for the U.S. Environmental Protection Agency under IAG No. DW13938432–01–0.

(18) Massachusetts Institute of Technology (MIT), 1998, ''Calibration of Eight Wind Speed Probes Over a Reynolds Number Range of 46,000 to 725,000 per Foot, Text and Summary Plots,'' Plus Appendices, WBWT–TR–1317, Prepared for The Cadmus Group, Inc., under EPA Contract 68–W6–0050, Work Assignment 0007AA–3.

(19) Fossil Energy Research Corporation, Final Report, ''Velocity Probe Tests in Non-axial Flow Fields,'' November 1998, Prepared for the U.S. Environmental Protection Agency.

(20) Fossil Energy Research Corporation, ''Additional Swirl Tunnel Tests: E-DAT and T-DAT Probes,'' February 24, 1999, Technical Memorandum Prepared for U.S. Environmental Protection Agency, P.O. No. 7W–1193–NALX.

Table 2H-1. Distance from the Wall for the Interior Boundary, d_b, of a Method 1 Exterior Equal-Area Sector as a Function of the Stack or Duct Radius, r, and Number of Method 1 Traverse Points

Number of Method 1 Traverse Points	d_b
16	0.134 × r
20	0.106 × r
24	0.087 × r
28	0.074 × r
32	0.065 × r
36	0.057 × r
40	0.051 × r
44	0.047 × r
48	0.043 × r

Table 2H-2 Default and Minimum Acceptable Calculated Wall Effects Adjustment Factors

		Brick and Mortar Stacks	All Other Stacks and Ducts
Default WAF		0.9900	0.9950
Minimum Acceptable WAF	**Partial Traverse**	0.9800	
	Complete Traverse	0.9700	

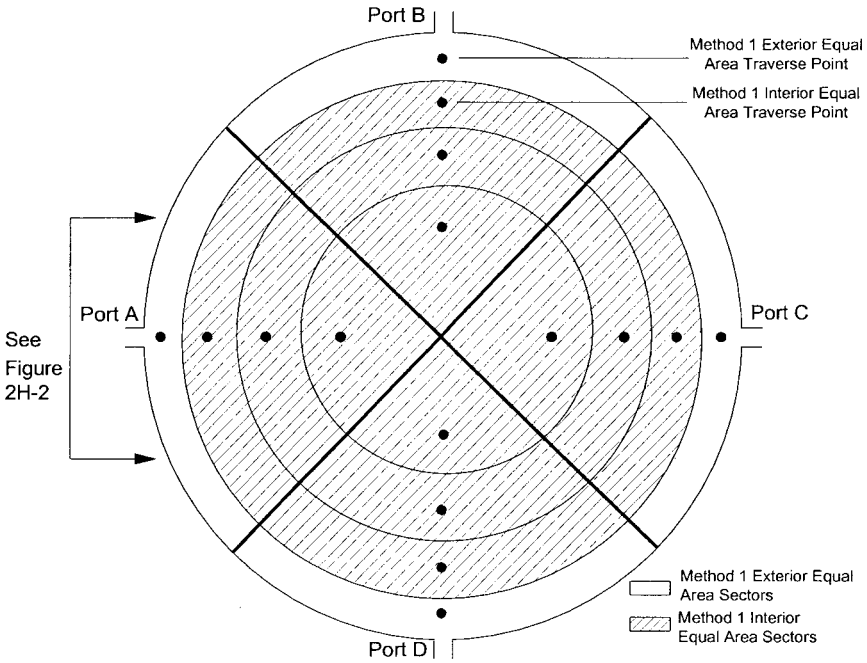

Figure 2H-1. Method 1 exterior and interior equal-area sectors with traverse points indicated.

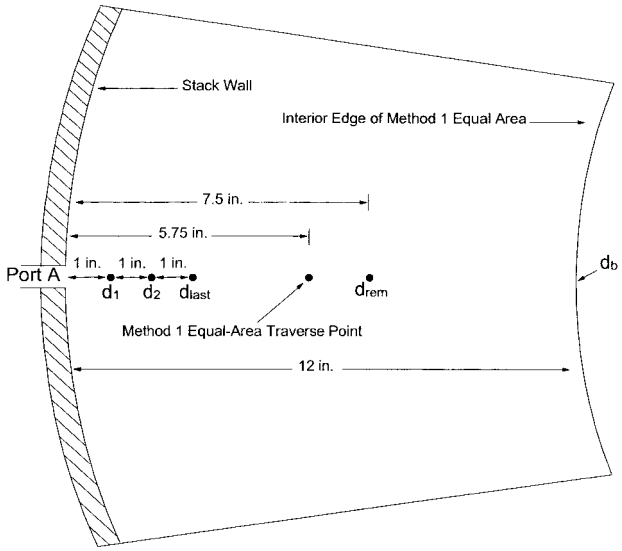

Figure 2H-2. Figure showing part of a Method 1 equal-area sector closest to the stack wall with three illustrative wall effects points at 1 in. intervals, the Method 1 equal-area traverse point, and d_{rem} for a 15 ft diameter stack.[1]

[1] Metric equivalents of English units used in Figure 2H-2 are as follows: 1 in. = 2.5 cm; 5.75 in. = 14.6 cm; 7.5 in. = 19.0 cm; 12 in. = 30.5 cm; and 15 ft = 4.6 m.

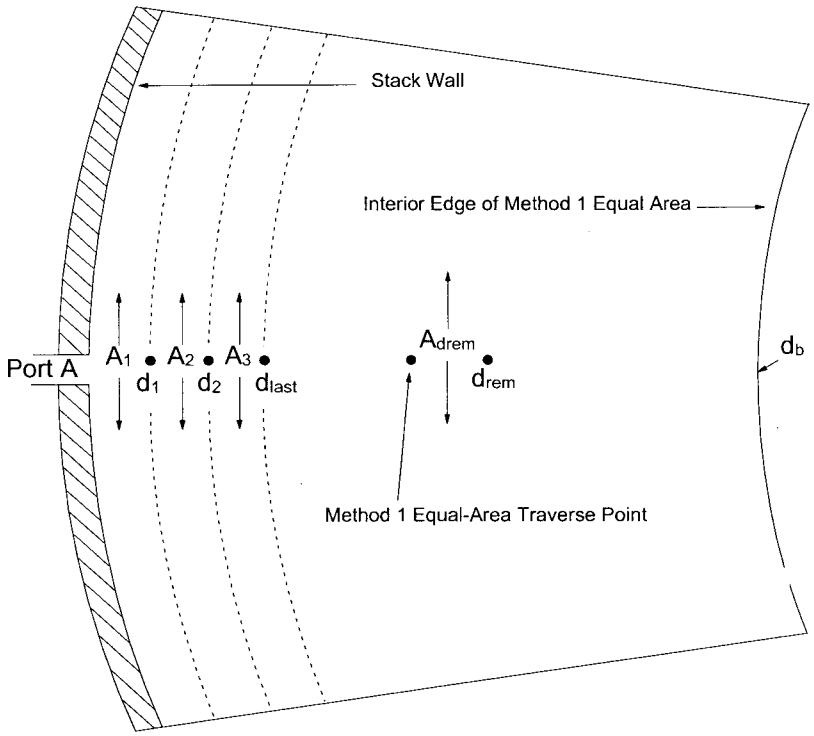

Figure 2H-3. Figure showing part of a Method 1 equal-area sector closest to the stack wall with three illustrative sub-sectors between the stack wall and d_{last} and the sub-sector represented by d_{rem}. A_1 is the area between the stack wall and d_1, A_2 is the area between d_1 and d_2, A_3 is the area between d_2 and d_{last}, and A_{drem} is the area between d_{last} and the interior edge of the Method 1 equal-area sector.

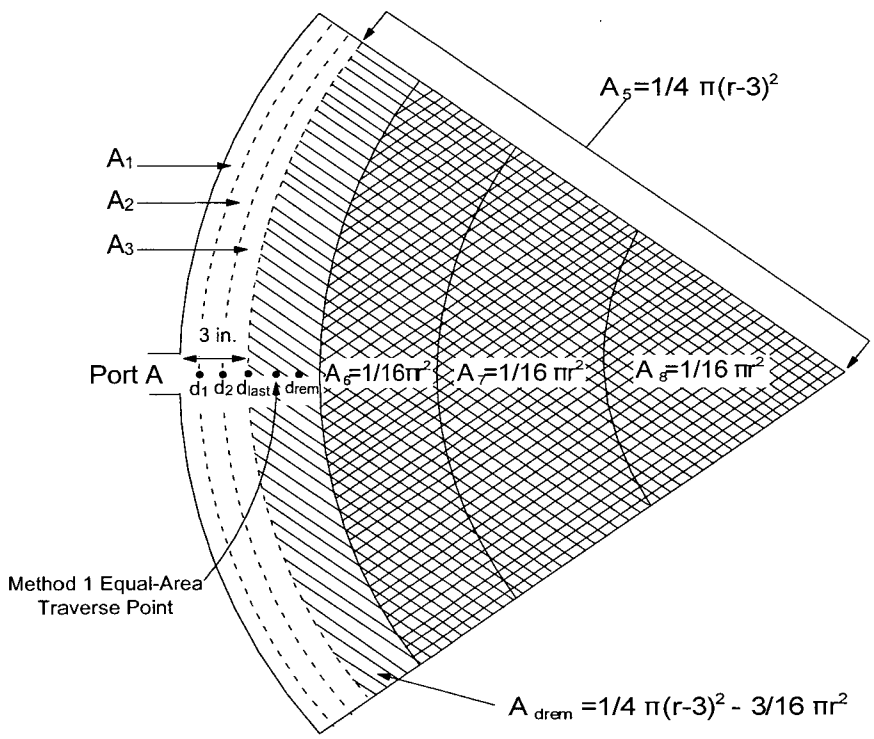

Figure 2H-4. Figure illustrating the calculations in Equation 2H-12 used to calculate the cross sectional area of the sub-sector between d_{last} and the interior edge of the Method 1 sector closest to the stack wall (A_{drem}) for a 16-point Method 1 traverse. The Method 1 equal-area traverse point and four wall effects traverse points (d_1, d_2, d_{last}, and d_{rem}) within the Method 1 sector closest to the stack wall are also shown.[1]

[1] All dimensions are given in in. Metric equivalents (in cm) are as follows: 3 in. = 7.6 cm; $A_5 = 1/4\ \pi(r-7.6)^2$; and $A_{drem} = 1/4\ \pi(r-7.6)^2 - 3/16\ \pi r^2$.

Form 2H-1. Calculation of Wall Effects Replacement Velocity Values (16-Point Method 1 Traverse)

1st Probe Type/ID/Pts. Sampled: _____ Tester(s): _____

2nd Probe Type/ID/Pts. Sampled: _____ Affiliation: _____

Entry Port ID (e.g., A, B, C, or D): _____

1. Diameter of the stack or duct (ft)		Radius, r, of the stack or duct (in.) (= diameter × 6)	

2. Location (column A), measured and decay velocities (columns B and C), and volumetric flow (column G) associated with each successive wall effects traverse point.

(A)	(B)	(C)	(D)	(E)	(F)	(G)
Distance (d) from Wall	Measured Velocity (v_d) at Distance d	Decay Velocity ($vdec_d$)	Intermediate Calculations		Area of Sub-sector (A_d)	Volumetric Flow in Sub-sector (Q_d)
		$\frac{v_{d-1}+v_d}{2}$ Note: $v_0 = 0$	$\frac{1}{4}\pi[r-d+1]^2$	$\frac{1}{4}\pi[r-d]^2$	(Col. D - Col. E)	(Col. C × Col. F)
(*in.*)	(*ft/sec*)	(*ft/sec*)	(*in.*^{2})	(*in.*^{2})	(*in.*^{2})	(*ft-in.*^{2}*/sec*)
$d = 1$						
$d = 2$						
. . .						
d_{last}						

Note: $d_{last} \leq 0.1340\ r$, where r is the radius of the stack or duct. See section 8.2.2.3 of the method.

3. Total volumetric flow for all sub-sectors located between stack wall and d_{last} (total Col. G).	
4. Volumetric flow for remainder of the Method 1 equal-area sector.	
a. Velocity measurement at distance d_{rem} from stack wall (v_{drem}). (If d_{rem}- d_{last}<½ in., then no measurement at d_{rem} is necessary. Enter the velocity at d_{last} on this line.)	
b. Total area in remainder of Method 1 equal-area segment (A_{drem}). Subtract $\frac{3}{16}\pi(r)^2$ from last entry in item 2, column E, and enter the result on this line.	
c. Multiply values on lines 4a and 4b. (Q_{drem})	
5. Wall effects-adjusted velocity in the Method 1 equal-area sector.	
a. Add the values on lines 3 and 4c. (Q_T)	
b. Divide line 5a by $\frac{1}{16}\pi(r)^2$. The resulting value is one of four "replacement" point velocity values adjusted for wall effects, $\hat{v}e_j$, as derived in Equation 2H-16.	
6. Substitute the value shown in 5b for the unadjusted velocity value in the Method 1 sector. (See Eq. 2H-18.)	

Notes: 1. Column B: If no measurement is taken at distance d, enter the velocity value obtained at the first subsequent traverse point where a measurement was taken, followed by the letters "NM". See section 8.7.1.2.

2. For clarity, only English units are shown in this form. Following are metric equivalents of the English units used in the form. In row 2, column A: 1 in. = 2.5 cm; 2 in. = 5.1 cm. In row 2, column D: If metric units (cm) are used, the term $\frac{1}{4}\pi(r-d+1)^2$ must be changed to $\frac{1}{4}\pi(r-d+2.5)^2$. In row 4a: ½ in. = 12.7 mm. Throughout the form, the metric equivalents of *in.*, *in.*^{2}, *ft*, *ft/sec*, and *ft-in*^{2}*/sec* are *cm*, *cm*^{2}, *m*, *m/sec*, and *m-cm*^{2}*/sec*, respectively.

Form 2H-2. Calculation of Wall Effects Replacement Velocity Values (Any Method 1 Traverse ≥16 Points)

1st Probe Type/ID/Pts. Sampled: _____ Tester(s): _____

2nd Probe Type/ID/Pts. Sampled: _____ Affiliation: _____

Entry Port ID (e.g., A, B, C, or D): _____

1. Diameter of the stack or duct (ft)		Radius, r, of the stack or duct (in.) (= diameter × 6)	

2. Location (Column A), measured and decay velocities (Columns B and C), and volumetric flow (Column G) associated with each successive wall effects traverse point.

(A)	(B)	(C)	(D)	(E)	(F)	(G)
Distance (d) from Wall	Measured Velocity (v_d) at Distance d	Decay Velocity ($vdec_d$)	Intermediate Calculations		Area of Sub-sector (A_d)	Volumetric Flow in Sub-sector (Q_d)
		$\frac{v_{d-1}+v_d}{2}$ Note: $v_0 = 0$	$\frac{2}{p}\pi[r-d+1]^2$	$\frac{2}{p}\pi[r-d]^2$	(Col. D - Col. E)	(Col. C × Col. F)
(*in.*)	(*ft/sec*)	(*ft/sec*)	(*in.*^{2})	(*in.*^{2})	(*in.*^{2})	(*ft-in.*^{2}*/sec*)
$d = 1$						
$d = 2$						
. . .						
d_{last}						

Note: $d_{last} \le d_b$, as defined in section 8.2.2.3 of the method.

3. Total volumetric flow for all sub-sectors located between stack wall and d_{last} (total Col. G).	
4. Volumetric flow for remainder of the Method 1 equal-area sector.	
a. Velocity measurement at distance d_{rem} from stack wall (v_{drem}). (If d_{rem}- d_{last} <½ in., then no measurement at d_{rem} is necessary. Enter the velocity at d_{last} on this line.)	
b. Total area in remainder of Method 1 equal-area segment (A_{drem}). Subtract $\left(\frac{p-2}{4p}\right)\pi(r)^2$ from last entry in item 2, column E, and enter the result on this line.	
c. Multiply values on lines 4a and 4b. (Q_{drem})	
5. Wall effects-adjusted velocity in the Method 1 near-wall equal-area segment.	
a. Add the values on lines 3 and 4. (Q_T)	
b. Divide line 5a by $\left(\frac{1}{2p}\right)\pi(r)^2$. The resulting value is one of four "replacement" point velocity values adjusted for wall effects, $\hat{v}e_j$, as derived in Equation 2H-15.	
6. Substitute the value shown in 5b for the unadjusted velocity value in the Method 1 sector. (See Eq. 2H-17.)	

Notes: 1. Column B: If no measurement is taken at distance d, enter the velocity value obtained at the first subsequent traverse point where a measurement was taken, followed by the letters "NM". See section 8.7.1.2.

2. For clarity, only English units are shown in this form. Following are metric equivalents of the English units used in the form. In row 2, column A: 1 in. = 2.5 cm; 2 in. = 5.1 cm. In row 2, column D: If metric units (cm) are used, the term ¼ $\pi(r-d+1)^2$ must be changed to ¼ $\pi(r-d+2.5)^2$. In row 4a: ½ in. = 12.7 mm. Throughout the form, the metric equivalents of *in.*, *in.*^{2}, *ft*, *ft/sec*, and *ft-in*^{2}*/sec* are *cm*, *cm*^{2}, *m*, *m/sec*, and *m-cm*^{2}*/sec*, respectively.

Form 2H-3. Calculation of Replacement Velocity Values for a Method 1 Equal-Area Sector Closest to the Stack Wall for a 16-Point Method 1 Traverse, Using a Partial Wall Effects Traverse

1st Probe Type/ID/Pts. Sampled: *Type S Straight-up/S-13/All* Tester(s): *Test Team III*

2nd Probe Type/ID/Pts. Sampled: _____ Affiliation: *Contractor III*

Entry Port ID (e.g., A, B, C, or D): *A*

1. Diameter of the stack or duct (ft)	24	Radius, r, of the stack or duct (in.) (= diameter × 6)	144

2. Location (column A), measured and decay velocities (columns B and C), and volumetric flow (column G) associated with each successive wall effects traverse point.

(A)	(B)	(C)	(D)	(E)	(F)	(G)
Distance (d) from Wall	Measured Velocity (v_d) at Distance d	Decay Velocity ($vdec_d$)	Intermediate Calculations		Area of Sub-sector (A_d)	Volumetric Flow in Sub-sector (Q_d)
		$\frac{v_{d-1}+v_d}{2}$ Note: $v_0 = 0$	$\frac{1}{4}\pi[r-d+1]^2$	$\frac{1}{4}\pi[r-d]^2$	(Col. D - Col. E)	(Col. C × Col. F)
(in.)	(ft/sec)	(ft/sec)	(in.²)	(in.²)	(in.²)	(ft-in.²/sec)
$d = 1$	51.71 NM	25.85	16,286.00	16,060.59	225.41	5,827.47
$d = 2$	51.71 NM	51.71	16,060.59	15,836.76	223.84	11,573.72
$d_{last} = 3$	51.71	51.71	15,836.76	15,614.49	222.27	11,492.51

3. Total volumetric flow for all sub-sectors located between stack wall and d_{last} (total Col. G).	28,893.70
4. Volumetric flow for remainder of the Method 1 equal-area sector.	
a. Velocity measurement at distance d_{rem} from stack wall (v_{drem}). (If d_{rem}- d_{last}<½ in., then no measurement at d_{rem} is necessary. Enter the velocity at d_{last} on this line.)	77.01
b. Total area in remainder of Method 1 equal-area segment (A_{drem}). Subtract $\frac{3}{16}\pi(r)^2$ from last entry in item 2, column E, and enter the result on this line.	3,399.99
c. Multiply values on lines 4a and 4b. (Q_{drem})	261,832.90
5. Wall effects-adjusted velocity in the Method 1 equal-area sector.	
a. Add the values on lines 3 and 4c. (Q_T)	290,726.61
b. Divide line 5a by $\frac{1}{16}\pi(r)^2$. The resulting value is one of four "replacement" point velocity values adjusted for wall effects, $\hat{v}e_j$, as derived in Equation 2H-16.	71.41
6. Substitute the value shown in 5b for the unadjusted velocity value in the Method 1 sector. (See Eq. 2H-18.)	

Form 2H-4 Calculation of Replacement Velocity Values for a Method 1 Equal-Area Sector Closest to the Stack Wall for a 16-Point Method 1 Traverse, Using a Complete Traverse

1st Probe Type/ID/Pts. Sampled: *Type S Straight-up/S-13/All* Tester(s): *Test Team III*

2nd Probe Type/ID/Pts. Sampled: _____ Affiliation: *Contractor III*

Entry Port ID (e.g., A, B, C, or D): *A*

1. Diameter of the stack or duct (ft)	24	Radius, r, of the stack or duct (in.) (= diameter × 6)	144

2. Location (column A), measured and decay velocities (columns B and C), and volumetric flow (column G) associated with each successive wall effects traverse point.

(A) Distance (d) from Wall	(B) Measured Velocity (v_d) at Distance d	(C) Decay Velocity ($vdec_d$)	(D) Intermediate Calculations	(E) Intermediate Calculations	(F) Area of Sub-sector (A_d)	(G) Volumetric Flow in Sub-sector (Q_d)
		$\frac{v_{d-1}+v_d}{2}$ Note: $v_0 = 0$	$\frac{1}{4}\pi[r-d+1]^2$	$\frac{1}{4}\pi[r-d]^2$	(Col. D - Col. E)	(Col. C × Col. F)
(in.)	(ft/sec)	(ft/sec)	(in.²)	(in.²)	(in.²)	(ft-in.²/sec)
$d = 1$	51.71 NM	25.85	16,286.00	16,060.59	225.41	5,827.47
$d = 2$	51.71 NM	51.71	16,060.59	15,836.76	223.84	11,573.72
$d = 3$	51.71	51.71	15,836.76	15,614.49	222.27	11,492.51
$d = 4$	62.26	56.98	15,614.49	15,393.79	220.70	12,576.24
$d = 5$	67.16	64.71	15,393.79	15,174.67	219.13	14,179.40
$d = 6$	69.44	68.30	15,174.67	14,957.11	217.56	14,858.32
$d = 7$	72.63	71.03	14,957.11	14,741.13	215.98	15,341.75
$d = 8$	71.37	72.00	14,741.13	14,526.71	214.41	15,437.01
$d = 9$	74.37	72.87	14,526.71	14,313.87	212.84	15,510.03
$d = 10$	75.80	75.08	14,313.87	14,102.60	211.27	15,863.30
$d = 11$	77.15	76.47	14,102.60	13,892.90	209.70	16,035.93
$d_{last} = 12$	78.58	77.86	13,892.90	13,684.77	208.13	16,205.92

3. Total volumetric flow for all sub-sectors located between stack wall and d_{last} (total Col. G).	164,901.59
4. Volumetric flow for remainder of the Method 1 equal-area sector.	
a. Velocity measurement at distance d_{rem} from stack wall (v_{drem}). (If d_{rem} - d_{last} <½ in., then no measurement at d_{rem} is necessary. Enter the velocity at d_{last} on this line.)	78.51
b. Total area in remainder of Method 1 equal-area segment (A_{drem}). Subtract $\frac{3}{16}\pi(r)^2$ from last entry in item 2, column E, and enter the result on this line.	1,470.26
c. Multiply values on lines 4a and 4b. (Q_{drem})	115,430.44
5. Wall effects-adjusted velocity in the Method 1 equal-area sector.	
a. Add the values on lines 3 and 4c. (Q_T)	280,332.03
b. Divide line 5a by $\frac{1}{16}\pi(r)^2$. The resulting value is one of four "replacement" point velocity values adjusted for wall effects, $\hat{v}e_i$, as derived in Equation 2H-16.	68.85
6. Substitute the value shown in 5b for the unadjusted velocity value in the Method 1 sector. (See Eq. 2H-18.)	

METHOD 3—GAS ANALYSIS FOR THE DETERMINATION OF DRY MOLECULAR WEIGHT

1. APPLICABILITY AND PRINCIPLE

1.1 Applicability.

1.1.1 This method is applicable for determining carbon dioxide (CO_2) and oxygen (O_2) concentrations and dry molecular weight of a sample from a gas stream of a fossil-fuel combustion process. The method may also be applicable to other processes where it has been determined that compounds other than CO_2, O_2, carbon monoxide (CO), and nitrogen (N_2) are not present in concentrations sufficient to affect the results.

1.1.2 Other methods, as well as modifications to the procedure described herein, are

also applicable for some or all of the above determinations. Examples of specific methods and modifications include: (1) A multipoint sampling method using an Orsat analyzer to analyze individual grab samples obtained at each point; (2) a method using CO_2 or O_2 and stoichiometric calculations to determine dry molecular weight; and (3) assigning a value of 30.0 for dry molecular weight, in lieu of actual measurements, for processes burning natural gas, coal, or oil. These methods and modifications may be used, but are subject to the approval of the Administrator, U.S. Environmental Protection Agency (EPA).

1.1.3 Note. Mention of trade names or specific products does not constitute endorsements by EPA.

1.2 Principle. A gas sample is extracted from a stack by one of the following methods: (1) Single-point, grab sampling; (2) single-point, integrated sampling; or (3) multipoint, integrated sampling. The gas sample is analyzed for pecent CO_2, percent O_2, and if necessary, for percent CO. For dry molecular weight determination, either an Orsat or a Fyrite analyzer may be used for the analysis.

2. Apparatus

As an alternative to the sampling apparatus and systems described herein, other sampling systems (e.g., liquid displacement) may be used, provided such systems are capable of obtaining a representative sample and maintaining a constant sampling rate, and are, otherwise, capable of yielding acceptable results. Use of such systems is subject to the approval of the Administrator.

2.1 Grab Sampling (Figure 3–1).

2.1.1 Probe. Stainless steel or borosilicate glass tubing equipped with an in-stack or out-stack filter to remove particulate matter (a plug of glass wool is satisfactory for this purpose). Any other materials, inert to O_2, CO_2, CO, and N_2 and resistant to temperature at sampling conditions, may be used for the probe. Examples of such materials are aluminum, copper, quartz glass, and Teflon.

2.1.2 Pump. A one-way squeeze bulb, or equivalent, to transport the gas sample to the analyzer.

2.2 Integrated Sampling (Figure 3–2).

2.2.1 Probe. Same as in Section 2.1.1.

2.2.2 Condenser. An air-cooled or water-cooled condenser, or other condenser no greater than 250 ml that will not remove O_2, CO_2, CO, and N_2, to remove excess moisture which would interfere with the operation of the pump and flowmeter.

2.2.3 Valve. A needle valve, to adjust sample gas flow rate.

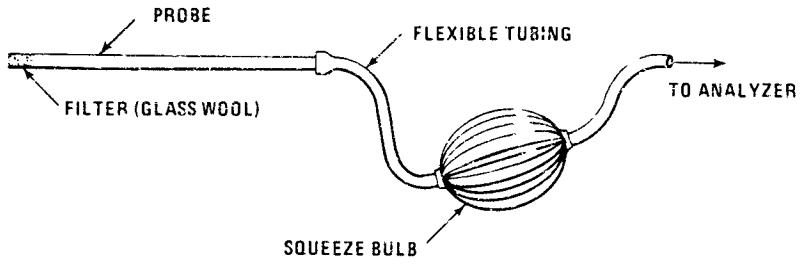

Figure 3-1. Grab-sampling train.

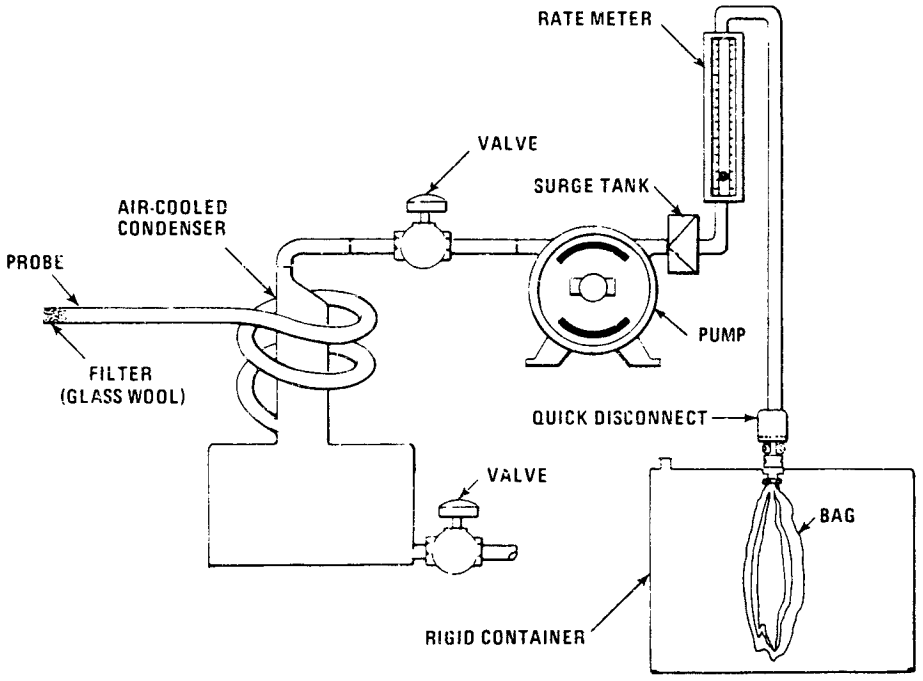

Figure 3-2. Integrated gas-sampling train.

2.2.4 Pump. A leaf-free, diaphragm-type pump, or equivalent, to transport sample gas to the flexible bag. Install a small surge tank between the pump and rate meter to eliminate the pulsation effect of the diaphragm pump on the rotameter.

2.2.5 Rate Meter. A rotameter, or equivalent rate meter, capable of measuring flow rate to within 2 percent of the selected flow rate. A flow rate range of 500 to 1000 cc/min is suggested.

2.2.6 Flexible Bag. Any leak-free plastic (e.g., Tedlar, Mylar, Teflon) or plastic-coated aluminum (e.g., aluminized Mylar) bag, or equivalent, having a capacity consistent with the selected flow rate and time length of the test run. A capacity in the range of 55 to 90 liters is suggested. To leak check the

bag, connect it to a water manometer, and pressurize the bag to 5 to 10 cm H_2O (2 to 4 in. H_2O). Allow to stand for 10 minutes. Any displacement in the water manometer indicates a leak. An alternative leak-check method is to pressurize the bag to 5 to 10 cm (2 to 4 in.) H_2O and allow to stand overnight. A deflated bag indicates a leak.

2.2.7 Pressure Gauge. A water-filled U-tube manometer, or equivalent, of about 30 cm (12 in.), for the flexible bag leak check.

2.2.8 Vacuum Gauge. A mercury manometer, or equivalent, of at least 760 mm (30 in.) Hg, for the sampling train leak check.

2.3 Analysis. An Orsat or Fyrite type combustion gas analyzer. For Orsat and Fyrite analyzer maintenance and operation procedures, follow the instructions recommended by the manufacturer, unless otherwise specified herein.

3. Single-Point, Grab Sampling and Analytical Procedure

3.1 The sampling point in the duct shall either be at the centroid of the cross section or at a point no closer to the walls than 1.00 m (3.3 ft), unless otherwise specified by the Administrator.

3.2 Set up the equipment as shown in Figure 3–1, making sure all connections ahead of the analyzer are tight. If an Orsat analyzer is used, it is recommended that the analyzer be leak checked by following the procedure in Section 6; however, the leak check is optional.

3.3 Place the probe in the stack, with the tip of the probe positioned at the sampling point; purge the sampling line long enough to allow at least five exchanges. Draw a sample into the analyzer, and immediately analyze it for percent CO_2 and percent O_2. Determine the percentage of the gas that is N_2 and CO by subtracting the sum of the percent CO_2 and percent 0_2 O from 100 percent. Calculate the dry molecular weight as indicated in Section 7.2.

3.4 Repeat the sampling, analysis, and calculation procedures until the dry molecular weights of any three grab samples differ from their mean by no more than 0.3 g/g-mole (0.3 lb/lb-mole). Average these three molecular weights, and report the results to the nearest 0.1 g/g-mole (0.1 lb/lb-mole).

4. Single-Point, Integrated Sampling and Analytical Procedure

4.1 The sampling point in the duct shall be located as specified in Section 3.1.

4.2 Leak check (optional) the flexible bag as in Section 2.2.6. Set up the equipment as shown in Figure 3–2. Just before sampling, leak check (optional) the train by placing a vacuum gauge at the condenser inlet, pulling a vacuum of at least 250 mm Hg (10 in. Hg), plugging the outlet at the quick disconnect, and then turning off the pump. The vacuum should remain stable for at least 0.5 minute. Evacuate the flexible bag. Connect the probe, and place it in the stack, with the tip of the probe positioned at the sampling point; purge the sampling line. Next, connect the bag, and make sure that all connections are tight.

4.3 Sample at a constant rate. The sampling run should be simultaneous with, and for the same total length of time as, the pollutant emission rate determination. Collection of at least 30 liters (1.00 ft^3) of sample gas is recommended; however, smaller volumes may be collected, if desired.

4.4 Obtain one integrated flue gas sample during each pollutant emission rate determination. Within 8 hours after the sample is taken, analyze it for percent CO_2 and percent O_2 using either an Orsat analyzer or a Fyrite type combustion gas analyzer. If an Orsat analyzer is used, it is recommended that Orsat leak check described in Section 6, be performed before this determination; however, the check is optional. Determine the percentage of the gas that is N_2 and CO by subtracting the sum of the percent CO_2 and percent 0 from 100 percent. Calculate the dry molecular weight as indicated in Section 7.2.

4.5 Repeat the analysis and calculation procedures until the individual dry molecular weights for any three analyses differ from their mean by no more than 0.3 g/g-mole (0.3 lb/lb-mole). Average these three molecular weights, and report the results to the nearest 0.1 g/g-mole (0.1 lb/lb-mole).

5. Multi-Point, Integrated Sampling and Analytical Procedure

5.1 Unless otherwise specified by the Administrator, a minimum of eight traverse points shall be used for circular stacks having diameters less than 0.61 m (24 in.), a minimum of nine shall be used for rectangular stacks having equivalent diameters less than 0.61 m (24 in.), and a minimum of 12 traverse points shall be used for all other cases. The traverse points shall be located according to Method 1. The use of fewer points is subject to approval of the Administrator.

5.2 Follow the procedures outlined in Sections 4.2 through 4.5, except for the following: Traverse all sampling points, and sample at each point for an equal length of time. Record sampling data as shown in Figure 3–3.

Time	Traverse pt.	Q, liter/min	% dev.[a]
Average			

[a] % dev.=$(Q—Q_{avg})/Q_{avg}$ X 100 (Must be ≤10%)

Figure 3–3. Sampling rate data.

6. LEAK-CHECK PROCEDURE FOR ORSAT ANALYZER

Moving an Orsat analyzer frequently causes it to leak. Therefore, an Orsat analyzer should be thoroughly leak checked on site before the flue gas sample is introduced into it. The procedure for leak checking an Orsat analyzer is as follows:

6.1 Bring the liquid level in each pipette up to the reference mark on the capillary tubing, and then close the pipette stopcock.

6.2 Raise the leveling bulb sufficiently to bring the confining liquid meniscus onto the graduated portion of the burette, and then close the manifold stopcock.

6.3 Record the meniscus position.

6.4 Observe the menisus in the burette and the liquid level in the pipette for movement over the next 4 minutes.

6.5 For the Orsat analyzer to pass the leak check, two conditions must be met:

6.5.1 The liquid level in each pipette must not fall below the botton of the capillary tubing during this 4-minute interval.

6.5.2 The menisus in the burette must not change by more than 0.2 ml during this 4-minute interval.

6.6 If the anlyzer fails the leak-check procedure, check all rubber connections and stopcocks to determine whether they might be the cause of the leak. Disassemble, clean, and regrease leaking stopcocks. Replace leaking rubber connections. After the analyzer is reassembled, repeat the lead-check procedure.

7. CALCULATIONS

7.1 Nomenclature

M_d = Dry molecular weight, g/g-mole (1b/1b-mole).

$\%CO_2$ = Percent CO_2 by volume, dry basis.

$\%O_2$ = Percent O_2 by volume, dry basis.

%CO = Percent CO by volume, dry basis.

$\%N_2$ = Percent N_2 by volume, dry basis.

0.280 = Molecular weight of N_2 or CO, divided by 100.

0.320 = Molecular wight of O_2 divided by 100.

0.440 = Molecular weight of CO_2 divided by 100.

7.2 Dry Molecular Weight. Use Equation 3–1 to calculate the dry molecular weight of the stack gas.

$$M_d = 0.440(\%CO_2) + 0.320\ (\%O_2) + 0.280(\%N_2 + \%CO) \qquad \text{Eq. 3–1}$$

NOTE. The above equation does not consider argon in air (about 0.9 percent, molecular weight of 39.9). A negative error of about 0.4 percent is introduced. The tester may choose to include argon in the analysis using procedures subject to approval of the Administrator.

8. BIBLIOGRAPHY

1. Altshuller, A.P. Storage of Gases and Vapors in Plastic Bags. International Journal of Air and Water Pollution. 6:75–81. 1963.

2. Conner, William D. and J.S. Nader. Air Sampling with Plastic Bags. Journal of the American Industrial Hygiene Association. *25*:292–297. 1964.

3. Burrell Manual for Gas Analysts, Seventh edition. Burrell Corporation, 2223 Fifth Avenue, Pittsburgh, PA. 15219. 1951.

4. Mitchell, W.J. and M.R. Midgett, Field Reliability of the Orsat Analyzer. Journal of Air Pollution Control Association. *26*:491–495. May 1976.

5. Shigehara, R.T., R. M. Neulicht, and W.S. Smith. Validating Orsat Analysis Data from Fossil Fuel-Fired Units. Stack Sampling News. *4*(2):21–26. August 1976.

METHOD 3A—DETERMINATION OF OXYGEN AND CARBON DIOXIDE CONCENTRATIONS IN EMISSIONS FROM STATIONARY SOURCES (INSTRUMENTAL ANALYZER PROCEDURE)

1. *Applicability and Principle*

1.1 Applicability. This method is applicable to the determination of oxygen (O_2) and carbon dioxide (CO_2) concentrations in emissions from stationary sources only when specified within the regulations.

1.2 Principle. A sample is continuously extracted from the effluent stream: a portion of the sample stream is conveyed to an instrumental analyzer(s) for determination of O_2 and CO_2 concentration(s). Performance specifications and test procedures are provided to ensure reliable data.

2. *Range and Sensitivity*

Same as Method 6C, Sections 2.1 and 2.2, except that the span of the monitoring system shall be selected such that the average O_2 or CO_2 concentration is not less than 20 percent of the span.

3. *Definitions*

3.1 Measurement System. The total equipment required for the determination of the O_2 or CO_2 concentration. The measurement system consists of the same major subsystems as defined in Method 6C, Sections 3.1.1, 3.1.2, and 3.1.3.

3.2 Span, Calibration Gas, Analyzer Calibration Error, Sampling System Bias, Zero Drift, Calibration Drift, Response Time, and Calibration Curve. Same as Method 6C, Sections 3.2 through 3.8, and 3.10.

3.3 Interference Response. The output response of the measurement system to a component in the sample gas, other than the gas component being measured.

4. *Measurement System Performance Specifications*

Same as Method 6C, Sections 4.1 through 4.4.

5. *Apparatus and Reagents*

5.1 Measurement System. Any measurement system for O_2 or CO_2 that meets the specifications of this method. A schematic of an acceptable measurement system is shown in Figure 6C–1 of Method 6C. The essential components of the measurement system are described below:

5.1.1 Sample Probe. A leak-free probe, of sufficient length to traverse the sample points.

5.1.2 Sample Line. Tubing, to transport the sample gas from the probe to the moisture removal system. A heated sample line is not required for systems that measure the O_2 or CO_2 concentration on a dry basis, or transport dry gases.

5.1.3 Sample Transport Line, Calibration Value Assembly, Moisture Removal System, Particulate Filter, Sample Pump, Sample Flow Rate Control, Sample Gas Manifold, and Data Recorder. Same as Method 6C, Sections 5.1.3 through 5.1.9, and 5.1.11, except that the requirements to use stainless steel, Teflon, and nonreactive glass filters do not apply.

5.1.4 Gas Analyzer. An analyzer to determine continuously the O_2 or CO_2 concentration in the sample gas stream. The analyzer shall meet the applicable performance specifications of Section 4. A means of controlling the analyzer flow rate and a device for determining proper sample flow rate (e.g., precision rotameter, pressure gauge downstream of all flow controls, etc.) shall be provided at the analyzer. The requirements for measuring and controlling the analyzer flow rate are not applicable if data are presented that demonstrate the analyzer is insensitive to flow variations over the range encountered during the test.

5.2 Calibration Gases. The calibration gases for CO_2 analyzers shall be CO_2 in N_2 or CO_2 in air. Alternatively, CO_2/SO_2, O_2/SO_2 , or $O_2/CO_2/SO_2$ gas mixtures in N_2 may be used. Three calibration gases, as specified Section 5.3.1 through 5.3.3 of Method 6C, shall be used. For O_2 monitors that cannot analyze zero gas, a calibration gas concentration equivalent to less than 10 percent of the span may be used in place of zero gas.

6. *Measurement System Performance Test Procedures*

Perform the following procedures before measurement of emissions (Section 7).

6.1 Calibration Concentration Verification. Follow Section 6.1 of Method 6C, except if calibration gas analysis is required, use Method 3 and change the acceptance criteria for agreement among Method 3 results to 5 percent (or 0.2 percent by volume, whichever is greater).

6.2 Interference Response. Conduct an interference response test of the analyzer prior to its initial use in the field. Thereafter, recheck the measurement system if changes are made in the instrumentation that could alter the interference response (e.g., changes in the type of gas detector). Conduct the interference response in accordance with Section 5.4 of Method 20.

6.3 Measurement System Preparation, Analyzer Calibration Error, and Sampling System Bias Check. Follow Sections 6.2 through 6.4 of Method 6C.

7. *Emission Test Procedure*

7.1 Selection of Sampling Site and Sampling Points. Select a measurement site and sampling points using the same criteria that are applicable to tests performed using Method 3.

7.2 Sample Collection. Position the sampling probe at the first measurement point, and begin sampling at the same rate as used during the sampling system bias check. Maintain constant rate sampling (i.e., ±10 percent) during the entire run. The sampling time per run shall be the same as for tests conducted using Method 3 plus twice the system response time. For each run, use only those measurements obtained after twice the response time of the measurement system has elapsed to determine the average effluent concentration.

7.3 Zero and Calibration Drift Test. Follow Section 7.4 of Method 6C.

8. *Quality Control Procedures*

The following quality control procedures are recommended when the results of this method are used for an emission rate correction factor, or excess air determination. The tester should select one of the following options for validating measurement results:

8.1 If both O_2 and CO_2 are measured using Method 3A, the procedures described in Section 4.4 of Method 3 should be followed to validate the O_2 and CO_2 measurement results.

8.2 If only O_2 is measured using Method 3A, measurements of the sample stream CO_2 concentration should be obtained at the sample by-pass vent discharge using an Orsat or Fyrite analyzer, or equivalent. Duplicate samples should be obtained concurrent with at least one run. Average the duplicate Orsat or Fyrite analysis results for each run. Use the average CO_2 values for comparison with the O_2 measurements in accordance with the procedures described in Section 4.4 of Method 3.

8.3 If only CO_2 is measured using Method 3A, concurrent measurements of the sample stream CO_2 concentration should be obtained using an Orsat or Fyrite analyzer as described in Section 8.2. For each run, differences greater than 0.5 percent between the Method 3A results and the average of the duplicate Fyrite analysis should be investigated.

9. *Emission Calculation*

For all CO_2 analyzers, and for O_2 analyzers that can be calibrated with zero gas, follow

Section 8 of Method 6C, except express all concentrations as percent, rather than ppm.

For O_2 analyzers that use a low-level calibration gas in place of a zero gas, calculate the effluent gas concentration using Equation 3A–1.

$$C_{gas} = \frac{C_{ma} - C_{oa}}{C_m - C_o}\left(\overline{C} - C_m\right) + C_{ma} \qquad \text{Eq. 3A-1}$$

Where:

C_{gas}=Effluent gas concentration, dry basis, percent.

C_{ma}=Actual concentration of the upscale calibration gas, percent.

C_{oa}=Actual concentration of the low-level calibration gas, percent.

C_m=Average of initial and final system calibration bias check responses for the upscale calibration gas, percent.

C_o=Average of initial and final system calibration bias check responses for the low-level gas, percent.

C=Average gas concentration indicated by the gas analyzer, dry basis, percent.

10. *Bibliography*

Same as bibliography of Method 6C.

METHOD 3B—GAS ANALYSIS FOR THE DETERMINATION OF EMISSION RATE CORRECTION FACTOR OR EXCESS AIR

1. APPLICABILITY AND PRINCIPLE

1.1 Applicability

1.1.1 This method is applicable for determining carbon dioxide (CO_2), oxygen (O_2), and carbon monoxide (CO) concentrations of a sample from a gas stream of a fossil-fuel combustion provess for excess air or emission rate correction factor calculations.

1.1.2 Other methods, as well as modifications to the procedure described herein, are also applicable for all of the above determinations. Examples of specific methods and modifications include: (1) A multi-point sampling method using an Orsat analyzer to analyze individual grab samples obtained at each point, and (2) a method using CO_2 or O_2 and stoichiometric calculations to determine excess air. These methods and modifications may be used, but are subject to the approval of the Administrator, U.S. Environmental Protection Agency (FPA).

1.1.3 Note. Mention of trade names or specific products does not constitute endorsement by EPA.

1.2 Principle. A gas sample is extracted from a stack by one of the following methods: (1) Single-point, grab sampling; (2) single-point, integrated sampling; or (3) multipoint, integrated sampling. The gas sample is analyzed for percent CO_2 percent O_2, and, if necessary, percent CO. An Orsat analyzer must be used for excess air or emission rate correction factor determinations.

2. APPARATUS

The alternative sampling systems are the same as those mentioned in Section 2 of Method 3.

2.1 Grab Sampling and Integrated Sampling. Same as in Sections 2.1 and 2.2, respectively, of Method 3.

2.2 Analysis. An Orsat analyzer only. For low CO_2 (less than 4.0 percent) or high O_2 (greater than 15.0 percent) concentrations, the measuring burette of the Orsat must have at least 0.1 percent subdivisions. For Orsat maintenance and operation procedures, follow the instructions recommended by the manufacturer, unless otherwise specified herein.

3. PROCEDURES

Each of the three procedures below shall be used only when specified in an applicable subpart of the standards. The use of these procedures for other purposes must have specific prior approval of the Adminsitrator.

NOTE .—A Fyrite-type combustion gas analyzer is not acceptable for excess air or emission rate correction factor determinations, unless approved by the Administrator. If both percent CO_2 and percent O_2 are measured, the analytical results of any of the three procedures given below may be used for calculating the dry molecular weight (see Method 3).

3.1 Single-Point, Grab Sampling and Analytical Procedure.

3.1.1 The sampling point in the duct shall be as described in Section 3.1 of Method 3.

3.1.2 Set up the equipment as shown in Figure 3–1 of Method 3, making sure all connections ahead of the analyzer are tight. Leak check the Orsat analyzer according to the procedure described in Section 6 of Method 3. This leak check is mandatory.

3.1.3 Place the probe in the stack, with the tip of the probe positioned at the sampling point; purge the sampling line long enough to allow at least five exchanges. Draw a sample into the analyzer. For emission rate correction factor determinations, immediately analyze the sample, as outlined

in Sections 3.1.4 and 3.1.5, for percent CO_2 or percent O_2. If excess air is desired, proceed as follows: (1) immediately analyze the sample, as in Sections 3.1.4 and 3.1.5, for percent CO_2, O_2, and CO; (2) determine the percentage of the gas that is N_2 by subtracting the sum of the percent CO_2, percent O_2, and percent CO from 100 percent, and (3) calculate percent excess air as outlined in Section 4.2.

3.1.4 To ensure complete absorption of the CO_2, O_2, or if applicable, CO, make repeated passes through each absorbing solution until two consecutive readings are the same. Several passes (three or four) should be made between readings. (If constant readings cannot be obtained after three consecutive readings, replace the absorbing solution.)

NOTE. —Since this single-point, grab sampling and analytical procedure is normally conducted in conjunction with a single-point, grab sampling and analytical procedure for a pollutant, only one analysis is ordinarily conducted. Therefore, great care must be taken to obtain a valid sample and analysis. Although in most cases, only CO_2 or O_2 is required, it is recommended that both CO_2 and O_2 be measured, and that Section 3.4 be used to validate the analytical data.

3.1.5 After the analysis is completed, leak check (mandatory) the Orsat analyzer once again, as described in Section 6 of Method 3. For the results of the analysis to be valid, the Orsat analyzer must pass this leak test before and after the analysis.

3.2 Single-Point, Integrated Sampling and Analytical Procedure.

3.2.1 The sampling point in the duct shall be located as specified in Section 3.1.1.

3.2.2 Leak check (mandatory) the flexible bag as in Section 2.2.6 of Method 3. Set up the equipment as shown in Figure 3–2 of Method 3. Just before sampling, leak check (mandatory) the train as described in Section 4.2 of Method 3.

3.2.3 Sample at a constant rate, or as specified by the Administrator. The sampling run must be simultaneous with, and for the same total length of time as, the pollutant emission rate determination. Collect at least 30 liters (1.00 ft^3) of sample gas. Smaller volumes may be collected, subject to approval of the Administrator.

3.2.4 Obtain one integrated flue gas sample during each pollutant emission rate determination. For emission rate correction factor determination, analyze the sample within 4 hours after it is taken for percent CO_2 or percent O_2 (as outlined in Sections 3.2.5 through 3.2.7). The Orsat analyzer must be leak checked (see Section 6 of Method 3) before the analysis. If excess air is desired, procede as follows: (1) within 4 hours after the sample is taken, analyze it (as in Sections 3.2.5 through 3.2.7) for percent CO_2, O_2, and CO; (2) determine the percentage of the gas that is N_2 by subtracting the sum of the percent CO_2, percent O_2, and percent CO from 100 percent; and (3) calculate percent excess air, as outlined in Section 4.2.

3.2.5 To ensure complete absorption of the CO_2, O_2, or if applicable, CO, follow the procedure described in Section 3.1.4.

NOTE. —Although in most instances only CO_2 or O_2 is required, it is recommended that both CO_2 and O_2 be measured, and that Section 3.4.1 be used to validate the analytical data.

3.2.6 Repeat the analysis until the following criteria are met:

3.2.6.1 For percent CO_2, repeat the analytical procedure until the results of any three analyses differ by no more than (a) 0.3 percent by volume when CO_2 is greater than 4.0 percent or (b) 0.2 percent by volume when CO_2 is less than or equal to 4.0 percent. Average three acceptable values of percent CO_2, and report the results to the nearest 0.2 percent.

3.2.6.2 For percent O_2, repeat the analytical procedure until the results of any three analyses differ by no more than (a) 0.3 percent by volume when O_2 is less than 15.0 percent or (b) 0.2 percent by volume when O_2 is greater than or equal to 15.0 percent. Average the three acceptable values of percent O_2, and report the results to the nearest 0.1 percent.

3.2.6.3 For percent CO, repeat the analytical procedure until the results of any three analyses differ by no more than 0.3 percent. Average the three acceptable values of percent CO, and report the results to the nearest 0.1 percent.

3.2.7 After the analysis is completed, leak check (mandatory) the Orsat analyzer once again, as described in Section 6 of Method 3. For the results of the analysis to be valid, the Orsat analyzer must pass this leak test before and after the analysis.

3.3 Multi-Point, Integrated Sampling and Analytical Procedure.

3.3.1 The sampling points shall be determined as specified in Section 5.3 of Method 3.

3.3.2 Follow the procedures outlined in Sections 3.2.2 through 3.2.7, except for the following: Traverse all sampling points, and sample at each point for an equal length of time. Record sampling data as shown in Figure 3–3 of Method 3.

3.4 Quality Control Procedure.

3.4.1 Data Validation When Both CO_2 and O_2 Are Measured. Although in most instances, only CO_2 or O_2 measurement is required, it is recommended that both CO_2 and O_2 be measured to provide a check on the quality of the data. The following quality control procedure is suggested.

NOTE. —Since the method for validating the CO_2 and O_2 analyses is based on combustion of organic and fossil fuels and dilution of the gas stream with air, this method does not apply to sources that (1) remove CO_2 or O_2 through processes other than combustion, (2) add O_2 (e.g., oxygen enrichment) and N_2 in proportions different from that of air, (3) add CO_2 (e.g., cement or lime kilns) or (4) have no fuel factor, F_o, values obtainable (e.g., extremely variable waste mixtures). This method validates the measured proportions of CO_2 and O_2 for fuel type, but the method does not detect sample dilution resulting from leaks during or after sample collection. The method is applicable for samples collected downstream of most lime or limestone flue-gas desulfurization units as the CO_2 added or removed from the gas stream is not significant in relation to the total CO_2 concentration. The CO_2 concentrations from other types of scrubbers using only water or basic slurry can be significantly affected and would render the F_o check minimally useful.

3.4.1.1 Calculate a fuel factor, F_o, using the following equation:

$$F_o = \frac{20.9 - \%O_2}{\%CO_2} \qquad \text{Eq. 3B-1}$$

where:

$\%O_2$=Percent O_2 by volume, dry basis.
$\%CO_2$=Percent CO_2 by volume, dry basis.
20.9=Percent O_2 by volume in ambient air.

If CO present in quantities measurable by this method, adjust the O_2 and CO_2 values before performing the calculation for F_0 as follows:

$\%CO_2\ (adj) = \%CO_2 + \%CO$
$\%O_2\ (adj) = \%O_2 - 0.5\ \%CO$
where:

%5CO = Percent CO by volume, dry basis.

3.4.1.2 Compare the calculated F_0 factor with the expected F_0 values. The following table may be used in establishing acceptable ranges for the expected F_0 if the fuel being burned is known. When fuels are burned in combinations, calculate the combined fuel F_d and F_c factors (as defined in Method 19) according to the procedure in Method 19, Section 5.2.3. Then calculate the F_0 factor as follows:

$$F_0 = \frac{0.209\ F_d}{F_c} \qquad \text{Eq. 3B-2}$$

Fuel type	F_0 range
Coal:	
Anthracite and lignite	1.016–1.130
Bituminous	1.083–1.230
Oil:	
Distillate	1.260–1.413
Residual	1.210–1.370
Gas:	
Natural	1.600–1.836
Propane	1.434–1.586
Butane	1.405–1.553
Wood	1.000–1.120
Wood bark	1.003–1.130

3.4.1.3 Calculated F_0 values, beyond the acceptable ranges shown in this table, should be investigated before accepting the test results. For example, the strength of the solutions in the gas analyzer and the analyzing technique should be checked by sampling and analyzing a known concentration, such as air; the fuel factor should be reviewed and verified. An acceptability range of ±12 percent is appropriate for the F_0 factor of mixed fuels with variable fuel ratios. The level of the emission rate relative to the compliance level should be considered in determining if a retest is appropriate, i.e., if the measured emissions are much lower or much greater than the compliance limit, repetition of the test would not significantly change the compliance status of the source and would be unnecessarily time consuming and costly.

4. CALCULATIONS

4.1 Nomenclature. Same as Section 5 of Method 3 with the addition of the following:

%EA = Percent excess air.
0.264 = Ratio of O_2 to N_2 in air, v/v.

4.2 Percent Excess Air. Calculate the percent excess air (if applicable) by substituting the appropriate values of percent O_2, CO, and N_2 (obtained from Section 3.1.3 or 3.2.4) into Equation 3B–3.

$$\%EA = \frac{\%O_2 - 0.5\ \%CO}{0.264\ \%N_2 - \left(\%O_2 - 0.5\ \%CO\right)} \times 100 \qquad \text{Eq. 3B-3}$$

NOTE. The equation above assumes that ambient air is used as the source of O_2 and that the fuel does not contain appreciable amounts of N_2 (as do coke oven or blast furnace gases). For those cases when appreciable amounts of N_2 are present (coal, oil and natural gas do not contain appreciable amounts of N_2) or when oxygen enrichment is used, alternative methods, subject to approval of the Administrator, are required.

5. BIBLIOGRAPHY

Same as Method 3.

METHOD 3C—DETERMINATION OF CARBON DIOXIDE, METHANE, NITROGEN, AND OXYGEN FROM STATIONARY SOURCES

1. Applicability and Principle

1.1 Applicability. This method applies to the analysis of carbon dioxide (CO_2), methane (CH_4), nitrogen (N_2), and oxygen (O_2) in samples from municipal solid waste landfills and other sources when specified in an applicable subpart.

1.2 Principle. A portion of the sample is injected into a gas chromatograph (GC) and the CO_2, CH_4, N_2, and O_2 concentrations are determined by using a thermal conductivity detector (TCD) and integrator.

2. Range and Sensitivity

2.1 Range. The range of this method depends upon the concentration of samples. The analytical range of TCD's is generally between approximately 10 ppmv and the upper percent range.

2.2 Sensitivity. The sensitivity limit for a compound is defined as the minimum detectable concentration of that compound, or the concentration that produces a signal-to-noise ratio of three to one. For CO_2, CH_4, N_2, and O_2, the sensitivity limit is in the low ppmv range.

3. Interferences

Since the TCD exhibits universal response and detects all gas components except the carrier, interferences may occur. Choosing the appropriate GC or shifting the retention times by changing the column flow rate may help to eliminate resolution interferences.

To assure consistent detector response, helium is used to prepare calibration gases. Frequent exposure to samples or carrier gas containing oxygen may gradually destroy filaments.

4. Apparatus

4.1 Gas Chromatograph. GC having at least the following components:

4.1.1 Separation Column. Appropriate column(s) to resolve CO_2, CH_4, N_2, O_2, and other gas components that may be present in the sample.

4.1.2 Sample Loop. Teflon or stainless steel tubing of the appropriate diameter. NOTE: Mention of trade names or specific products does not constitute endorsement or recommendation by the U. S. Environmental Protection Agency.

4.1.3 Conditioning System. To maintain the column and sample loop at constant temperature.

4.1.4 Thermal Conductivity Detector.

4.2 Recorder. Recorder with linear strip chart. Electronic integrator (optional) is recommended.

4.3 Teflon Tubing. Diameter and length determined by connection requirements of cylinder regulators and the GC.

4.4 Regulators. To control gas cylinder pressures and flow rates.

4.5 Adsorption Tubes. Applicable traps to remove any O_2 from the carrier gas.

5. Reagents

5.1 Calibration and Linearity Gases. Standard cylinder gas mixtures for each compound of interest with at least three concentration levels spanning the range of suspected sample concentrations. The calibration gases shall be prepared in helium.

5.2 Carrier Gas. Helium, high-purity.

6. Analysis

6.1 Sample Collection. Use the sample collection procedures described in Methods 3 or 25C to collect a sample of landfill gas (LFG).

6.2 Preparation of GC. Before putting the GC analyzer into routine operation, optimize the operational conditions according to the manufacturer's specifications to provide good resolution and minimum analysis time. Establish the appropriate carrier gas flow and set the detector sample and reference cell flow rates at exactly the same levels. Adjust the column and detector temperatures to the recommended levels. Allow sufficient time for temperature stabilization. This may typically require 1 hour for each change in temperature.

6.3 Analyzer Linearity Check and Calibration. Perform this test before sample analysis. Using the gas mixtures in section 5.1, verify the detector linearity over the range of suspected sample concentrations with at least three points per compound of interest. This initial check may also serve as the initial instrument calibration. All subsequent calibrations may be performed using a single-point standard gas provided the calibration point is within 20 percent of the sample component concentration. For each instrument calibration, record the carrier and detector flow rates, detector filament and block temperatures, attenuation factor, injection time, chart speed, sample loop volume, and component concentrations. Plot a linear regression of the standard concentrations versus area values to obtain the response factor of each compound. Alternatively, response factors of uncorrected component concentrations (wet basis) may be generated using instrumental integration. NOTE: Peak height may be used instead of peak area throughout this method.

6.4 Sample Analysis. Purge the sample loop with sample, and allow to come to atmospheric pressure before each injection.

Analyze each sample in duplicate, and calculate the average sample area (A). The results are acceptable when the peak areas for two consecutive injections agree within 5 percent of their average. If they do not agree, run additional samples until consistent area data are obtained. Determine the tank sample concentrations according to section 7.2.

7. Calculations

Carry out calculations retaining at least one extra decimal figure beyond that of the acquired data. Round off results only after the final calculation.

7.1 Nomenclature.

A = average sample area

B_w = moisture content in the sample, fraction

C = component concentration in the sample, dry basis, ppmv

C_t = calculated NMOC concentration, ppmv C equivalent

C_{tm} = measured NMOC concentration, ppmv C equivalent

P_{bar} = barometric pressure, mm Hg

P_{ti} = gas sample tank pressure after evacuation, mm Hg absolute

P_t = gas sample tank pressure after sampling, but before pressurizing, mm Hg absolute

P_{tf} = final gas sample tank pressure after pressurizing, mm Hg absolute

P_w = vapor pressure of H_2O (from table 3C–1), mm Hg

T_{ti} = sample tank temperature before sampling, °K

T_t = sample tank temperature at completion of sampling, °K

T_{tf} = sample tank temperature after pressurizing, °K

r = total number of analyzer injections of sample tank during analysis (where j = injection number, 1 . . . r)

R = Mean calibration response factor for specific sample component, area/ppmv

TABLE 3C–1.—MOISTURE CORRECTION

Temperature °C	Vapor Pressure of H_2O, mm Hg
4	6.1
6	7.0
8	8.0
10	9.2
12	10.5
14	12.0
16	13.6
18	15.5
20	17.5
22	19.8
24	22.4
26	25.2
28	28.3
30	31.8

7.2 Concentration of Sample Components. Calculate C for each compound using Equations 3C–1 and 3C–2. Use the temperature and barometric pressure at the sampling site to calculate Bw. If the sample was diluted with helium using the procedures in Method 25C, use Equation 3C–3 to calculate the concentration.

$$B_w = \frac{P_w}{P_{bar}} \qquad 3C\text{-}1$$

$$C = \frac{A}{R\left(1 - B_w\right)} \qquad 3C\text{-}2$$

$$C = \frac{\dfrac{P_{tf}}{T_{tf}}}{\dfrac{P_t}{T_t} - \dfrac{P_{ti}}{T_{ti}}} \quad \frac{A}{R\left(1 - B_w\right)} \qquad 3C\text{-}3$$

8. Bibliography

1. McNair, H.M., and E.J. Bonnelli. Basic Gas Chromatography. Consolidated Printers, Berkeley, CA. 1969.

METHOD 4—DETERMINATION OF MOISTURE CONTENT IN STACK GASES

1. *Principle and Applicability*

1.1 Principle. A gas sample is extracted at a constant rate from the source; moisture is removed from the sample stream and determined either volumetrically or gravimetrically.

1.2 Applicability. This method is applicable for determining the moisture content of stack gas.

Two procedures are given. The first is a reference method, for accurate determinations of moisture content (such as are needed to calculate emission data). The second is an approximation method, which provides estimates of percent moisture to aid in setting isokinetic sampling rates prior to a pollutant emission measurement run. The approximation method described herein is only a suggested approach; alternative means for approximating the moisture content, e.g., drying tubes, wet bulb-dry bulb techniques, condensation techniques, stoichiometric calculations, previous experience, etc., are also acceptable.

The reference method is often conducted simultaneously with a pollutant emission measurement run; when it is, calculation of percent isokinetic, pollutant emission rate, etc., for the run shall be based upon the results of the reference method or its equivalent; these calculations shall not be based

upon the results of the approximation method, unless the approximation method is shown, to the satisfaction of the Administrator, U.S. Environmental Protection Agency, to be capable of yielding results within 1 percent H_2O of the reference method.

NOTE: The reference method may yield questionable results when applied to saturated gas streams or to streams that contain water droplets. Therefore, when these conditions exist or are suspected, a second determination of the moisture content shall be made simultaneously with the reference method, as follows: Assume that the gas stream is saturated. Attach a temperature sensor [capable of measuring to ±1 °C (2 °F)] to the reference method probe. Measure the stack gas temperature at each traverse point (see Section 2.2.1) during the reference method traverse; calculate the average stack gas temperature. Next, determine the moisture percentage, either by: (1) using a psychrometric chart and making appropriate corrections if stack pressure is different from that of the chart, or (2) using saturation vapor pressure tables. In cases where the pyschrometric chart or the saturation vapor pressure tables are not applicable (based on evaluation of the process), alternative methods, subject to the approval of the Administrator, shall be used.

2. *Reference Method*

The procedure described in Method 5 for determining moisture content is acceptable as a reference method.

2.1 Apparatus. A schematic of the sampling train used in this reference method is shown in Figure 4–1. All components shall be maintained and calibrated according to the procedure outlined in Method 5.

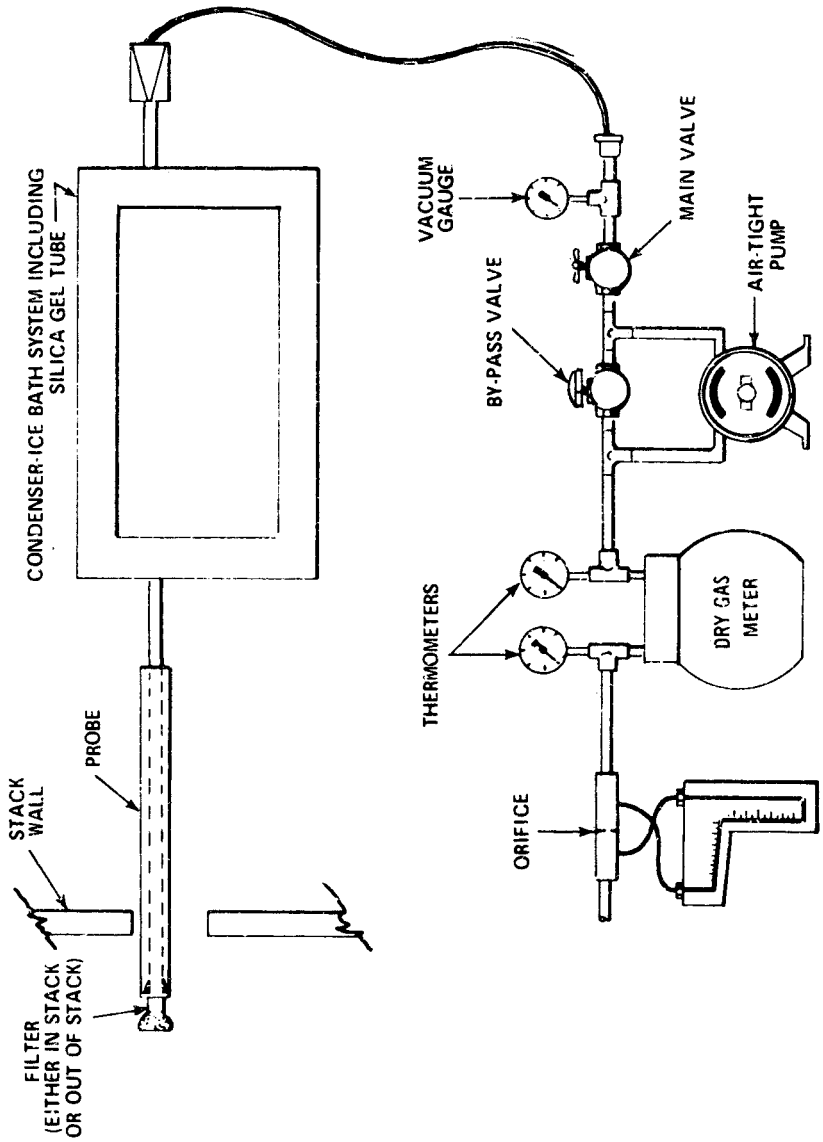

Figure 4-1. Moisture sampling train-reference method.

2.1.1 Probe. The probe is constructed of stainless steel or glass tubing, sufficiently heated to prevent water condensation, and is equipped with a filter, either in-stack (e.g., a plug of glass wool inserted into the end of the probe) or heated out-stack (e.g., as described in Method 5), to remove particular matter.

When stack conditions permit, other metals or plastic tubing may be used for the probe, subject to the approval of the Administrator.

2.1.2 Condenser. The condenser consists of four impingers connected in series with ground glass, leak-free fittings or any similarly leak-free non-contaminating fittings. The first, third, and fourth impingers shall

be of the Greenburg-Smith design, modified by replacing the tip with a 1.3 centimeter (½ inch) ID glass tube extending to about 1.3 cm (½ in.) from the bottom of the flask. The second impinger shall be of the Greenburg-Smith design with the standard tip. Modifications (e.g., using flexible connections between the impingers, using materials other than glass, or using flexible vacuum lines to connect the filter holder to the condenser) may be used, subject to the approval of the Administrator.

The first two impingers shall contain known volumes of water, the third shall be empty, and the fourth shall contain a known weight of 6- to 16-mesh indicating type silica gel, or equivalent desiccant. If the silica gel has been previously used, dry at 175 °C (350 °F) for 2 hours. New silica gel may be used as received. A thermometer, capable of measuring temperature to within 1 °C (2 °F), shall be placed at the outlet of the fourth impinger, for monitoring purposes.

Alternatively, any system may be used (subject to the approval of the Administrator) that cools the sample gas stream and allows measurement of both the water that has been condensed and the moisture leaving the condenser, each to within 1 ml or 1 g. Acceptable means are to measure the condensed water, either gravimetrically or volumetrically, and to measure the moisture leaving the condenser by: (1) monitoring the temperature and pressure at the exit of the condenser and using Dalton's law of partial pressures, or (2) passing the sample gas stream through a tared silica gel (or equivalent desiccant) trap, with exit gases kept below 20 °C (68 °F), and determining the weight gain.

If means other than silica gel are used to determine the amount of moisture leaving the condenser, it is recommended that silica gel (or equivalent) still be used between the condenser system and pump, to prevent moisture condensation in the pump and metering devices and to avoid the need to make corrections for moisture in the metered volume.

2.1.3 Cooling System. An ice bath container and crushed ice (or equivalent) are used to aid in condensing moisture.

2.1.4 Metering System. This system includes a vacuum gauge, leak-free pump, thermometers capable of measuring temperature to within 3 °C (5.4 °F), dry gas meter capable of measuring volume to within 2 percent, and related equipment as shown in Figure 4–1. Other metering systems, capable of maintaining a constant sampling rate and determining sample gas volume, may be used, subject to the approval of the Administrator.

2.1.5 Barometer. Mercury, aneroid, or other barometer capable of measuring atmospheric pressure to within 2.5 mm Hg (0.1 in. Hg) may be used. In many cases, the barometric reading may be obtained from a nearby National Weather Service station, in which case the station value (which is the absolute barometric pressure) shall be requested and an adjustment for elevation differences between the weather station and the sampling point shall be applied at a rate of minus 2.5 mm Hg (0.1 in. Hg) per 30 m (100 ft) elevation increase or vice versa for elevation decrease.

2.1.6 Graduated Cylinder and/or Balance. These items are used to measure condensed water and moisture caught in the silica gel to within 1 ml or 0.5 g. Graduated cylinders shall have subdivisions no greater than 2 ml. Most laboratory balances are capable of weighing to the nearest 0.5 g or less. These balances are suitable for use here.

2.2 Procedure. The following procedure is written for a condenser system (such as the impinger system described in Section 2.1.2) incorporating volumetric analysis to measure the condensed moisture, and silica gel and gravimetric analysis to measure the moisture leaving the condenser.

2.2.1 Unless otherwise specified by the Administrator, a minimum of eight traverse points shall be used for circular stacks having diameters less than 0.61 m (24 in.), a minimum of nine points shall be used for rectangular stacks having equivalent diameters less than 0.61 m (24 in.), and a minimum of twelve traverse points shall be used in all other cases. The traverse points shall be located according to Method 1. The use of fewer points is subject to the approval of the Administrator. Select a suitable probe and probe length such that all traverse points can be sampled. Consider sampling from opposite sides of the stack (four total sampling ports) for large stacks, to permit use of shorter probe lengths. Mark the probe with heat resistant tape or by some other method to denote the proper distance into the stack or duct for each sampling point. Place known volumes of water in the first two impingers. Weigh and record the weight of the silica gel to the nearest 0.5 g, and transfer the silica gel to the fourth impinger; alternatively, the silica gel may first be transferred to the impinger, and the weight of the silica gel plus impinger recorded.

2.2.2 Select a total sampling time such that a minimum total gas volume of 0.60 scm (21 scf) will be collected, at a rate no greater than 0.021 m^3/min (0.75 cfm). When both moisture content and pollutant emission rate are to be determined, the moisture determination shall be simultaneous with, and for the same total length of time as, the pollutant emission rate run, unless otherwise specified in an applicable subpart of the standards.

2.2.3 Set up the sampling train as shown in Figure 4–1. Turn on the probe heater and (if applicable) the filter heating system to

temperatures of about 120 °C (248 °F), to prevent water condensation ahead of the condenser; allow time for the temperatures to stabilize. Place crushed ice in the ice bath container. It is recommended, but not required, that a leak check be done, as follows: Disconnect the probe from the first impinger or (if applicable) from the filter holder. Plug the inlet to the first impinger (or filter holder) and pull a 380 mm (15 in.) Hg vacuum; a lower vacuum may be used, provided that it is not exceeded during the test. A leakage rate in excess of 4 percent of the average sampling rate or 0.00057 m^3/min (0.02 cfm), whichever is less, is unacceptable. Following the leak check, reconnect the probe to the sampling train.

2.2.4 During the sampling run, maintain a sampling rate within 10 percent of constant rate, or as specified by the Administrator. For each run, record the data required on the example data sheet shown in Figure 4–2. Be sure to record the dry gas meter reading at the beginning and end of each sampling time increment and whenever sampling is halted. Take other appropriate readings at each sample point, at least once during each time increment.

2.2.5 To begin sampling, position the probe tip at the first traverse point. Immediately start the pump and adjust the flow to the desired rate. Traverse the cross section, sampling at each traverse point for an equal length of time. Add more ice and, if necessary, salt to maintain a temperature of less 20 °C (68 °F) at the silica gel outlet.

2.2.6 After collecting the sample, disconnect the probe from the filter holder (or from the first impinger) and conduct a leak check (mandatory) as described in Section 2.2.3. Record the leak rate. If the leakage rate exceeds the allowable rate, the tester shall either reject the test results or shall correct the sample volume as in Section 6.3 of Method 5. Next, measure the volume of the moisture condensed to the nearest ml. Determine the increase in weight of the silica gel (or silica gel plus impinger) to the nearest 0.5 g. Record this information (see example data sheet, Figure 4–3) and calculate the moisture percentage, as described in 2.3 below.

2.2.7 A quality control check of the volume metering system at the field site is suggested before collecting the sample following the procedure in Method 5, Section 4.4

2.3 Calculations. Carry out the following calculations, retaining at least one extra decimal figure beyond that of the acquired data. Round off figures after final calculation.

FIGURE 4–2—FIELD MOISTURE DETERMINATION REFERENCE METHOD

Plant .....
Location .....
Operator .....
Date .....
Run No. .....
Ambient temperature .....
Barometric pressure .....
Probe length m (ft) .....

SCHEMATIC OF STACK CROSS SECTION

Traverse point number	Sampling time	Stack temperature	Pressure differential across orifice meter ΔH	Meter reading gas sample volume	ΔV_m	Gas Sample temperature at dry gas meter		Temperaturem of gas leaving condenser or last impinger
						Inlet	Outlet	
	(θ), min.	°C (°F)	mm (in.) H_2O	m^3 (ft^3)	m^3 (ft^3)	(Tm_{in}), °C (°F)	(Tm_{out}), °C (°F)	°C (°F)
Total.								
Average.								

FIGURE 4–3—ANALYTICAL DATA—REFERENCE METHOD

	Impinger volume, ml	Silica gel weight, g
Final		
Initial		
Difference		

2.3.1 Nomenclature.

B_{ws}=Proportion of water vapor, by volume, in the gas stream.

M_w=Molecular weight of water, 18.0 g/g-mole (18.0 lb/lb-mole).

P_m=Absolute pressure (for this method, same as barometric pressure) at the dry gas meter, mm Hg (in. Hg).

P_{std}=Standard absolute pressure, 760 mm Hg (29.92 in. Hg).

R=Ideal gas constant, 0.06236 (mm Hg) (m^3)/(g-mole) (°K) for metric units and 21.85 (in. Hg) (ft^3)/(lb-mole) (°R) for English units.

T_m=Absolute temperature at meter, °K (°R).

T_{std}=Standard absolute temperature, 293°K (528°R).

V_m=Dry gas volume measured by dry gas meter, dcm (dcf).

ΔV_m=Incremental dry gas volume measured by dry gas meter at each traverse point, dcm (dcf).

$V_{m(std)}$=Dry gas volume measured by the dry gas meter, corrected to standard conditions, dscm (dscf).

$V_{wc(std)}$=Volume of water vapor condensed corrected to standard conditions, scm (scf).

$V_{wsg(std)}$=Volume of water vapor collected in silica gel corrected to standard conditions, scm (scf).

V_f=Final volume of condenser water, ml.

V_i=Initial volume, if any, of condenser water, ml.

W_f=Final weight of silica gel or silica gel plus impinger, g.

W_i=Initial weight of silica gel or silica gel plus impinger, g.

Y=Dry gas meter calibration factor.

ρ_w=Density of water, 0.9982 g/ml (0.002201 lb/ml).

2.3.2 Volume of Water Vapor Condensed.

$$V_{wc(std)} = \frac{(V_f - V_i)\rho_w R T_{std}}{P_{std} M_w} = K_1 (V_f - V_i) \qquad \text{Eq. 4-1}$$

Where:

K_1=0.001333 m^3/ml for metric units
=0.04707 ft^3/ml for English units

2.3.3 Volume of Water Vapor Collected in Silica Gel.

$$V_{wsg(std)} = \frac{(W_f - W_i) R T_{std}}{P_{std} M_w} = K_2 (W_f - W_i) \qquad \text{Eq. 4-2}$$

Where:

K_2=0.001335 m^3/g for metric units
=0.04715 ft^3/g for English units

2.3.4 Sample Gas Volume.

$$V_{m(std)} = V_m Y \frac{(P_m)(T_{std})}{(P_{std})(T_m)} = K_3 Y \frac{V_m P_m}{T_m} \qquad \text{Eq. 4-3}$$

Where:

K_3=0.3858 °K/mm Hg for metric units
=17.64 °R/in. Hg for English units

NOTE: If the post-test leak rate (Section 2.2.6) exceeds the allowable rate, correct the value of V_m in Equation 4–3, as described in Section 6.3 of Method 5.

2.3.5 Moisture Content.

$$B_{ws} = \frac{V_{wc(std)} + V_{wsg(std)}}{V_{wc(std)} + V_{wsg(std)} + V_{m(std)}} \qquad \text{Eq. 4-4}$$

NOTE: In saturated or moisture droplet-laden gas streams, two calculations of the moisture content of the stack gas shall be made, one using a value based upon the saturated conditions (see Section 1.2), and another based upon the results of the impinger analysis. The lower of these two values of B_{ws} shall be considered correct.

2.3.6 Verification of Constant Sampling Rate. For each time increment, determine the ΔV_m. Calculate the average. If the value for any time increment differs from the average by more than 10 percent, reject the results and repeat the run.

3. *Approximation Method*

The approximation method described below is presented only as a suggested method (see Section 1.2).

3.1 Apparatus.

3.1.1 Probe. Stainless steel glass tubing, sufficiently heated to prevent water condensation and equipped with a filter (either in-stack or heated out-stack) to remove particulate matter. A plug of glass wool, inserted into the end of the probe, is a satisfactory filter.

3.1.2 Impingers. Two midget impingers, each with 30 ml capacity, or equivalent.

3.1.3 Ice Bath. Container and ice, to aid in condensing moisture in impingers.

3.1.4 Drying Tube. Tube packed with new or regenerated 6- to 16-mesh indicating-type silica gel (or equivalent desiccant), to dry the sample gas and to protect the meter and pump.

3.1.5 Valve. Needle valve, to regulate the sample gas flow rate.

3.1.6 Pump. Leak-free, diaphragm type, or equivalent, to pull the gas sample through the train.

3.1.7 Volume Meter. Dry gas meter, sufficiently accurate to measure the sample volume within 2%, and calibrated over the range of flow rates and conditions actually encountered during sampling.

3.1.8 Rate Meter. Rotameter, to measure the flow range from 0 to 3 lpm (0 to 0.11 cfm).

3.1.9 Graduated Cylinder. 25 ml.

3.1.10 Barometer. Mercury, aneroid, or other barometer, as described in Section 2.1.5 above.

3.1.11 Vacuum Gauge. At least 760 mm Hg (30 in. Hg) gauge, to be used for the sampling leak check.

3.2 Procedure.

3.2.1 Place exactly 5 ml distilled water in each impinger.

Leak check the sampling train as follows: Temporarily insert a vacuum gauge at or near the probe inlet; then, plug the probe inlet and pull a vacuum of at least 250 mm Hg (10 in. Hg). Note the time rate of change of the dry gas meter dial; alternatively, a rotameter (0–40 cc/min) may be temporarily attached to the dry gas meter outlet to determine the leakage rate. A leak rate not in excess of 2 percent of the average sampling rate is acceptable.

NOTE: Carefully release the probe inlet plug before turning off the pump.

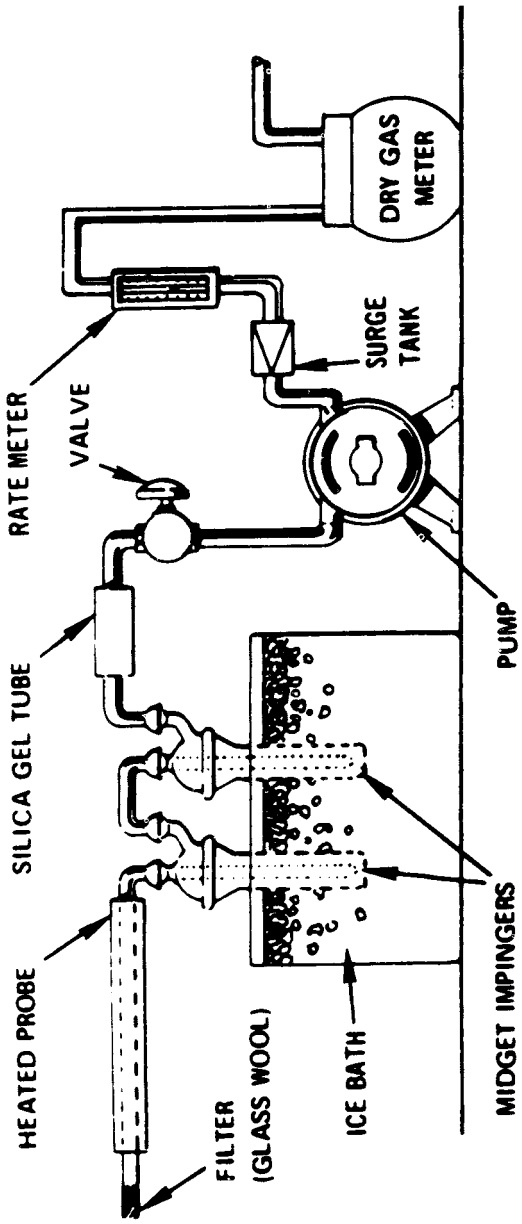

Figure 4-4. Moisture-sampling train - approximation method.

FIGURE 4–5—FIELD MOISTURE DETERMINATION—APPROXIMATION METHOD

FIGURE 4–5—FIELD MOISTURE DETERMINATION—APPROXIMATION METHOD

Location ..... Comments:
Test .....
Date .....
Operator .....
Barometric pressure .....

Clock time	Gas volume through meter, (V_m), m³ (ft³)	Rate meter setting m³/min (ft³/min)	Meter temperature, °C (°F)

3.2.2 Connect the probe, insert it into the stack, and sample at a constant rate of 2 lpm (0.071 cfm). Continue sampling until the dry gas meter registers about 30 liters (1.1 ft³) or until visible liquid droplets are carried over from the first impinger to the second. Record temperature, pressure, and dry gas meter readings as required by Figure 4–5.

3.2.3 After collecting the sample, combine the contents of the two impingers and measure the volume to the nearest 0.5 ml.

3.3 Calculations. The calculation method presented is designed to estimate the moisture in the stack gas; therefore, other data, which are only necessary for accurate moisture determinations, are not collected. The following equations adequately estimate the moisture content, for the purpose of determining isokinetic sampling rate settings.

3.3.1 Nomenclature.

B_{wm}=Approximate proportion, by volume, of water vapor in the gas stream leaving the second impinger, 0.025.

B_{ws}=Water vapor in the gas stream, proportion by volume.

M_w=Molecular weight of water, 18.0 g/g-mole (18.0 lb/lb-mole).

P_m=Absolute pressure (for this method, same as barometric pressure) at the dry gas meter.

P_{std}=Standard absolute pressure, 760 mm Hg (29.92 in. Hg).

R=Ideal gas constant, 0.06236 (mm Hg) (m³)/(g-mole) (°K) for metric units and 21.85 (in. Hg) (ft³)/lb-mole) (°R) for English units.

T_m=Absolute temperature at meter, °K (°R).

T_{std}=Standard absolute temperature, 293°K (528° R).

V_f=Final volume of impinger contents, ml.

V_i=Initial volume of impinger contents, ml.

V_m=Dry gas volume measured by dry gas meter, dcm (dcf).

$V_{m(std)}$=Dry gas volume measured by dry gas meter, corrected to standard conditions, dscm (dscf).

$V_{wc(std)}$=Volume of water vapor condensed, corrected to standard conditions, scm (scf).

ρ_w=Density of water, 0.9982 g/ml (0.002201 lb/ml).

Y=Dry gas meter calibration factor.

3.3.2 Volume of Water Vapor Collected.

$$V_{wc} = \frac{(V_f - V_i)\rho_w R T_{std}}{P_{std} M_w} = K_1 (V_f - V_i) \qquad \text{Eq. 4-5}$$

Where:

K_1=0.001333 m³/ml for metric units
=0.04707 ft³/ml for English units.

3.3.3 Gas Volume.

$$V_{m(std)} = V_m \left(\frac{P_m}{P_{std}}\right)\left(\frac{T_{std}}{T_m}\right) = K_2 \frac{V_m P_m}{T_m} \qquad \text{Equation 4-6}$$

where:

K_2=0.3858 °K/mm Hg for metric units
=17.64 °R/in. Hg for English units

3.3.4 Approximate Moisture Content.

$$B_{wo} = \frac{V_{wc}}{V_{wc} + V_{m(std)}} + B_{wm} = \frac{V_{wc}}{V_{wc} + V_{m(std)}} + (0.025) \qquad \text{Equation 4-7}$$

4. *Calibration*

4.1 For the reference method, calibrate equipment as specified in the following sections of Method 5: Section 5.3 (metering system); Section 5.5 (temperature gauges); and Section 5.7 (barometer). The recommended leak check of the metering system (Section 5.6 of Method 5) also applies to the reference method. For the approximation method, use the procedures outlined in Section 5.1.1 of Method 6 to calibrate the metering system, and the procedure of Method 5, Section 5.7 to calibrate the barometer.

5. *Bibliography*

1. Air Pollution Engineering Manual (Second Edition). Danielson, J. A. (ed.). U.S. Environmental Protection Agency, Office of Air Quality Planning and Standards. Research Triangle Park, NC. Publication No. AP–40. 1973.

2. Devorkin, Howard. et al. Air Pollution Source Testing Manual. Air Pollution Control District, Los Angeles, CA. November, 1963.

3. Methods for Determination of Velocity, Volume, Dust and Mist Content of Gases. Western Precipitation Division of Joy Manufacturing Co., Los Angeles, CA. Bulletin WP–50. 1968.

METHOD 5—DETERMINATION OF PARTICULATE EMISSIONS FROM STATIONARY SOURCES

1. *Principle and Applicability*

1.1 Principle. Particulate matter is withdrawn isokinetically from the source and collected on a glass fiber filter maintained at a temperature in the range of 120±14 °C (248±25 °F) or such other temperature as specified by an applicable subpart of the standards or approved by Administrator, U.S. Environmental Protection Agency, for a particular application. The particulate mass, which includes any material that condenses at or above the filtration temperature, is determined gravimetrically after removal of uncombined water.

1.2 Applicability. This method is applicable for the determination of particulate emissions from stationary sources.

2. *Apparatus*

2.1 Sampling Train. A schematic of the sampling train used in this method is shown in Figure 5–1. Complete construction details are given in APTD–0581 (Citation 2 in Bibliography); commercial models of this train are also available. For changes from APTD–0581 and for allowable modifications of the train shown in Figure 5–1, see the following subsections.

The operating and maintenance procedures for the sampling train are described in APTD–0576 (Citation 3 in Bibliography). Since correct usage is important in obtaining valid results, all users should read APTD–0576 and adopt the operating and maintenance procedures outlined in it, unless otherwise specified herein. The sampling train consists of the following components:

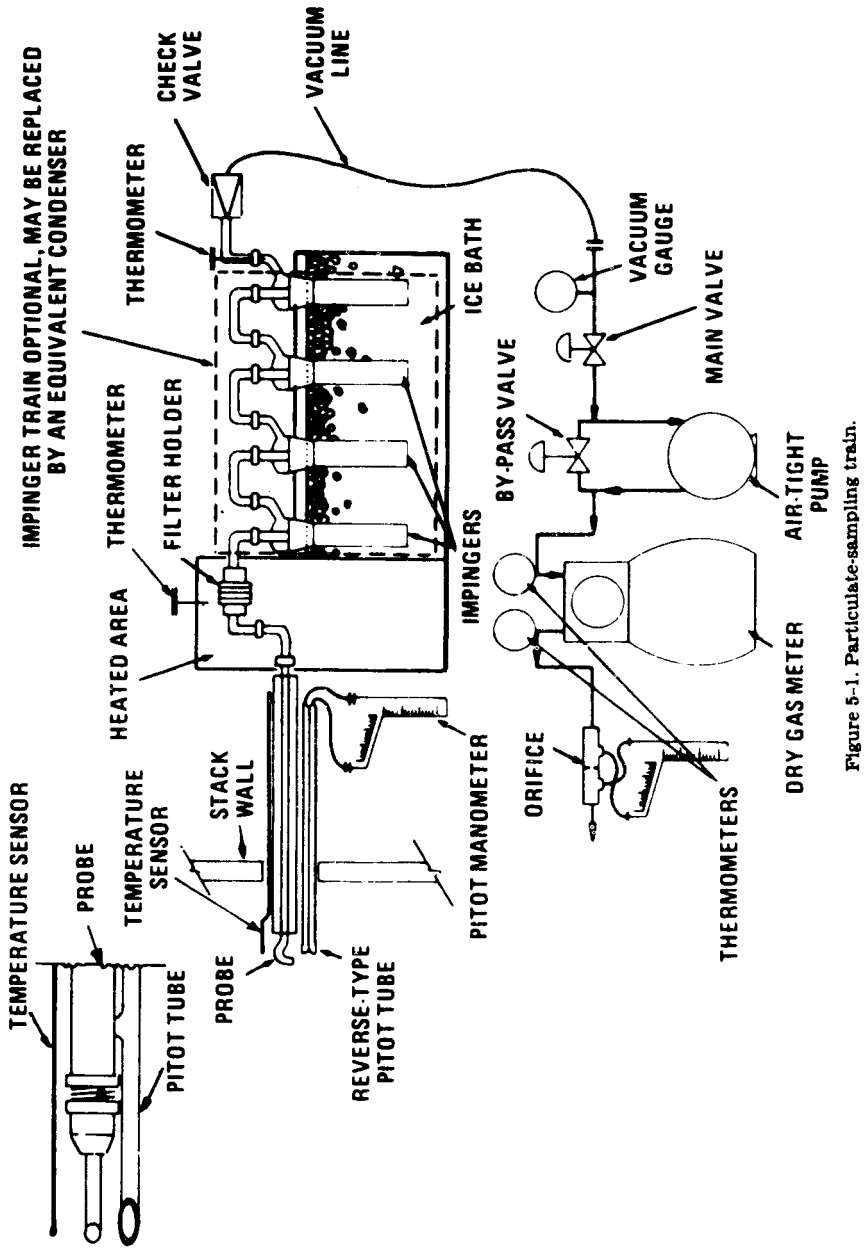

Figure 5-1. Particulate-sampling train.

2.1.1 Probe Nozzle. Stainless steel (316) or glass with sharp, tapered leading edge. The angle of taper shall be ≤30° and the taper shall be on the outside to preserve a constant internal diameter. The probe nozzle shall be of the button-hook or elbow design, unless otherwise specified by the Administrator. If made of stainless steel, the nozzle

shall be constructed from seamless tubing; other materials of construction may be used, subject to the approval of the Administrator.

A range of nozzle sizes suitable for isokinetic sampling should be available, e.g., 0.32 to 1.27 cm (⅛ to ½ in.)—or larger if higher volume sampling trains are used—inside diameter (ID) nozzles in increments of 0.16 cm (1⁄16 in.). Each nozzle shall be calibrated according to the procedures outlined in Section 5.

2.1.2 Probe Liner. Borosilicate or quartz glass tubing with a heating system capable of maintaining a gas temperature at the exit end during sampling of 120±14 °C (248±25 °F), or such other temperature as specified by an applicable subpart of the standards or approved by the Administrator for a particular application. (The tester may opt to operate the equipment at a temperature lower than that specified.) Since the actual temperature at the outlet of the probe is not usually monitored during sampling, probes constructed according to APTD–0581 and utilizing the calibration curves of APTD–0576 (or calibrated according to the procedure outlined in APTD–0576) will be considered acceptable.

Either borosilicate or quartz glass probe liners may be used for stack temperatures up to about 480 °C (900 °F); quartz liners shall be used for temperatures between 480 and 900 °C (900 and 1,650 °F). Both types of liners may be used at higher temperatures than specified for short periods of time, subject to the approval of the Administrator. The softening temperature for borosilicate is 820 °C (1,508 °F), and for quartz it is 1,500 °C (2,732 °F).

Whenever practical, every effort should be made to use borosilicate or quartz glass probe liners. Alternatively, metal liners (e.g., 316 stainless steel, Incoloy 825,[2]or other corrosion resistant metals) made of seamless tubing may be used, subject to the approval of the Administrator.

2.1.3 Pitot Tube. Type S, as described in Section 2.1 of Method 2, or other device approved by the Administrator. The pitot tube shall be attached to the probe (as shown in Figure 5–1) to allow constant monitoring of the stack gas velocity. The impact (high pressure) opening plane of the pitot tube shall be even with or above the nozzle entry plane (see Method 2, Figure 2–6b) during sampling. The Type S pitot tube assembly shall have a known coefficient, determined as outlined in Section 4 of Method 2.

2.1.4 Differential Pressure Gauge. Inclined manometer or equivalent device (two), as described in Section 2.2 of Method 2. One manometer shall be used or velocity head ($\Delta\beta$) readings, and the other, for orifice differential pressure readings.

2.1.5 Filter Holder. Borosilicate glass, with a glass frit filter support and a silicone rubber gasket. Other materials of construction (e.g., stainless steel, Teflon, Viton) may be used, subject to approval of the Administrator. The holder design shall provide a positive seal against leakage from the outside or around the filter. The holder shall be attached immediately at the outlet of the probe (or cyclone, it used).

2.1.6 Filter Heating System. Any heating system capable of maintaining a temperature around the filter holder during sampling of 120±14 °C (248±25 °F), or such other temperature as specified by an applicable subpart of the standards or approved by the Administrator for a particular application. Alternatively, the tester may opt to operate the equipment at a temperature lower than that specified. A temperature gauge capable of measuring temperature to within 3 °C (5.4 °F) shall be installed so that the temperature around the filter holder can be regulated and monitored during sampling. Heating systems other than the one shown in APTD–0581 may be used.

2.1.7 Condenser. The following system shall be used to determine the stack gas moisture content: Four impingers connected in series with leak-free ground glass fittings or any similar leak-free non-contaminating fittings. The first, third, and fourth impingers shall be of the Greenburg-Smith design, modified by replacing the tip with 1.3 cm (½ in.) ID glass tube extending to about 1.3 cm (½ in.) from the bottom of the flask. The second impinger shall be of the Greenburg-Smith design with the standard tip. Modifications (e.g., using flexible connections between the impingers, using materials other than glass, or using flexible vacuum lines to connect the filter holder to the condenser) may be used, subject to the approval of the Administrator. The first and second impingers shall contain known quantities of water (Section 4.1.3), the third shall be empty, and the fourth shall contain a known weight of silica gel, or equivalent desiccant. A thermometer, capable of measuring temperature to within 1 °C (2 °F) shall be placed at the outlet of the fourth impinger for monitoring purposes.

Alternatively, any system that cools the sample gas stream and allows measurement of the water condensed and moisture leaving the condenser, each to within 1 ml or 1 g may be used, subject to the approval of the Administrator. Acceptable means are to measure the condensed water either gravimetrically or volumetrically and to measure the moisture leaving the condenser by: (1) monitoring the temperature and pressure at the exit of the condenser and using Dalton's law of partial pressures; or (2) passing the sample has stream through a tared silica gel (or equivalent desiccant) trap with exit gases

[2] Mention of trade names or specific product does not constitute endorsement by the Environmental Protection Agency.

kept below 20 °C (68 °F) and determining the weight gain.

If means other than silica gel are used to determine the amount of moisture leaving the condenser, it is recommended that silica gel (or equivalent) still be used between the condenser system and pump to prevent moisture condensation in the pump and metering devices and to avoid the need to make corrections for moisture in the metered volume.

NOTE: If a determination of the particulate matter collected in the impingers is desired in addition to moisture content, the impinger system described above shall be used, without modification. Individual States or control agencies requiring this information shall be contacted as to the sample recovery and analysis of the impinger contents.

2.1.8 Metering System. Vacuum gauge, leak-free pump, thermometers capable of measuring temperature to within 3 °C (5.4 °F), dry gas meter capable of measuring volume to within 2 percent, and related equipment, as shown in Figure 5–1. Other metering systems capable of maintaining sampling rates within 10 percent of isokinetic and of determining sample volumes to within 2 percent may be used, subject to the approval of the Administrator. When the metering system is used in conjunction with a pitot tube, the system shall enable checks of isokinetic rates.

Sampling trains utilizing metering systems designed for higher flow rates than that decribed in APTD–0581 or APDT–0576 may be used provided that the specifications of this method are met.

2.1.9 Barometer. Mercury aneroid, or other barometer capable of measuring atmospheric pressure to within 2.5 mm Hg (0.1 in. Hg). In many cases the barometric reading may be obtained from a nearby National Weather Service station, in which case the station value (which is the absolute barometric pressure) shall be requested and an adjustment for elevation differences between the weather station and sampling point shall be applied at a rate of minus 2.5 mm Hg (0.1 in. Hg) per 30 m (100 ft) elevation increase or vice versa for elevation decrease.

2.1.10 Gas Density Determination Equipment. Temperature sensor and pressure gauge, as described in Sections 2.3 and 2.4 of Method 2, and gas analyzer, if necessary, as described in Method 3. The temperature sensor shall, preferably, be permanently attached to the pitot tube or sampling probe in a fixed configuration, such that the tip of the sensor extends beyond the leading edge of the probe sheath and does not touch any metal. Alternatively, the sensor may be attached just prior to use in the field. Note, however, that if the temperature sensor is attached in the field, the sensor must be placed in an interference-free arrangement with respect to the Type S pitot tube openings (see Method 2, Figure 2–7). As a second alternative, if a difference of not more than 1 percent in the average velocity measurement is to be introduced, the temperature gauge need not be attached to the probe or pitot tube. (This alternative is subject to the approval of the Administrator.)

2.2 Sample Recovery. The following items are needed.

2.2.1 Probe-Liner and Probe-Nozzle Brushes. Nylon bristle brushes with stainless steel wire handles. The probe brush shall have extensions (at least as long as the probe) of stainless steel, Nylon, Teflon, or similarly inert material. The brushes shall be properly sized and shaped to brush out the probe liner and nozzle.

2.2.2 Wash Bottles—Two. Glass wash bottles are recommended; polyethylene wash bottles may be used at the option of the tester. It is recommended that acetone not be stored in polyethylene bottles for longer than a month.

2.2.3 Glass Sample Storage Containers. Chemically resistant, borosilicate glass bottles, for acetone washes, 500 ml or 1000 ml. Screw cap liners shall either be rubber-backed Teflon or shall be constructed so as to be leak-free and resistant to chemical attack by acetone. (Narrow mouth glass bottles have been found to be less prone to leakage.) Alternatively, polyethylene bottles may be used.

2.2.4 Petri Dishes. For filter samples, glass or polyethylene, unless otherwise specified by the Administrator.

2.2.5 Graduated Cylinder and/or Balance. To measure condensed water to within 1 ml or 1 g. Graduated cylinders shall have subdivisions no greater than 2 ml. Most laboratory balances are capable of weighing to the nearest 0.5 g or less. Any of these balances is suitable or use here and in Section 2.3.4.

2.2.6 Plastic Storage Containers. Air-tight containers to store silica gel.

2.2.7 Funnel and Rubber Policeman. To aid in transfer of silica gel to container; not necessary if silica gel is weighed in the field.

2.2.8 Funnel. Glass or polyethylene, to aid in sample recovery.

2.3 Analysis. For analysis, the following equipment is needed.

2.3.1 Glass Weighing Dishes.

2.3.2 Desiccator.

2.3.3 Analytical Balance. To measure to within 0.1 mg.

2.3.4 Balance. To measure to within 0.5 g.

2.3.5 Beakers. 250 ml.

2.3.6 Hygrometer. To measure the relative humidity of the laboratory environment.

2.3.7 Temperature Gauge. To measure the temperature of the laboratory environment.

3. *Reagents*

3.1 Sampling. The reagents used in sampling are as follows:

3.1.1 Filters. Glass fiber filters, without organic binder, exhibiting at least 99.95 percent efficiency (<0.05 percent penetration) on 0.3-micron dioctyl phthalate smoke particles. The filter efficiency test shall be conducted in accordance with ASTM Standard Method D2986–71 (Reapproved 1978) (incorporated by reference—see §60.17). Test data from the supplier's quality control program are sufficient for this purpose. In sources containing SO_2 or SO_3, the filter material must be of a type that is unreactive to SO_2 or SO_3. Citation 10 in Bibliography, may be used to select the appropriate filter.

3.1.2 Silica Gel. Indicating type, 6 to 16 mesh. If previously used, dry at 175 °C (350 °F) for 2 hours. New silica gel may be used as received. Alternatively, other types of desiccants (equivalent or better) may be used, subject to the approval of the Administrator.

3.1.3 Water. When analysis of the material caught in the impingers is required, deionized distilled water shall be used. Run blanks prior to field use to eliminate a high blank on test samples.

3.1.4 Crushed Ice.

3.1.5 Stopcock Grease. Acetone-insoluble, heat-stable silicone grease. This is not necessary if screw-on connectors with Teflon sleeves, or similar, are used. Alternatively, other types of stopcock grease may be used, subject to the approval of the Administrator.

3.2 Sample Recovery. Acetone-reagent grade, ≤0.001 percent residue, in glass bottles—is required. Acetone from metal containers generally has a high residue blank and should not be used. Sometimes, suppliers transfer acetone to glass bottles from metal containers; thus, acetone blanks shall be run prior to field use and only acetone with low blank values (≤0.001 percent) shall be used. In no case shall a blank value of greater than 0.001 percent of the weight of acetone used be subtracted from the sample weight.

3.3 Analysis. Two reagents are required for the analysis:

3.3.1 Acetone. Same as 3.2.

3.3.2 Desiccant. Anhydrous calcium sulfate, indicating type. Alternatively, other types of desiccants may be used, subject to the approval of the Administrator.

4. *Procedure*

4.1 Sampling. The complexity of this method is such that, in order to obtain reliable results, testers should be trained and experienced with the test procedures.

4.1.1 Pretest Preparation. It is suggested that sampling equipment be maintained according to the procedure described in APTD–0576.

Weigh several 200 to 300 g portions of silica gel in air-tight containers to the nearest 0.5 g. Record the total weight of the silica gel plus container, on each container. As an alternative, the silica gel need not be preweighed, but may be weighed directly in the impinger or sampling holder just prior to train assembly.

Check filters visually against light for irregularities and flaws or pinhole leaks. Label filters of the proper diameter on the back side near the edge using numbering machine ink. As an alternative, label the shipping containers (glass or plastic petri dishes) and keep the filters in these containers at all times except during sampling and weighing.

Desiccate the filters at 20±5.6 °C (68±10 °F) and ambient pressure for at least 24 hours and weigh at intervals of at least 6 hours to a constant weight, i.e., 0.5 mg change from previous weighing; record results to the nearest 0.1 mg. During each weighing the filter must not be exposed to the laboratory atmosphere for a period greater than 2 minutes and a relative humidity above 50 percent. Alternatively (unless otherwise specified by the Administrator), the filters may be oven dried at 105 °C (220 °F) for 2 to 3 hours, desiccated for 2 hours, and weighed. Procedures other than those described, which account for relative humidity effects, may be used, subject to the approval of the Administrator.

4.1.2 Preliminary Determinations. Select the sampling site and the minimum number of sampling points according to Method 1 or as specified by the Administrator. Determine the stack pressure, temperature, and the range of velocity heads using Method 2; it is recommended that a leak-check of the pitot lines (see Method 2, Section 3.1) be performed. Determine the moisture content using Approximation Method 4 or its alternatives for the purpose of making isokinetic sampling rate settings. Determine the stack gas dry molecular weight, as described in Method 2, Section 3.6; if integrated Method 3 sampling is used for molecular weight determination, the integrated bag sample shall be taken simultaneously with, and for the same total length of time as, the particulate sample run.

Select a nozzle size based on the range of velocity heads, such that it is not necessary to change the nozzle size in order to maintain isokinetic sampling rates. During the run, do not change the nozzle size. Ensure that the proper differential pressure gauge is chosen for the range of velocity heads encountered (see Section 2.2 of Method 2).

Select a suitable probe liner and probe length such that all traverse points can be sampled. For large stacks, consider sampling from opposite sides of the stack to reduce the length of probes.

Select a total sampling time greater than or equal to the minimum total sampling time specified in the test procedures for the specific industry such that (1) the sampling time per point is not less than 2 min (or some greater time interval as specified by the Administrator), and (2) the sample volume taken (corrected to standard conditions)

will exceed the required minimum total gas sample volume. The latter is based on an approximate average sampling rate.

It is recommended that the number of minutes sampled at each point be an integer or an integer plus one-half minute, in order to avoid timekeeping errors. The sampling time at each point shall be the same.

In some circumstances, e.g., batch cycles, it may be necessary to sample for shorter times at the traverse points and to obtain smaller gas sample volumes. In these cases, the Administrator's approval must first be obtained.

4.1.3 Preparation of Collection Train. During preparation and assembly of the sampling train, keep all openings where contamination can occur covered until just prior to assembly or until sampling is about to begin.

Place 100 ml of water in each of the first two impingers, leave the third impinger empty, and transfer approximately 200 to 300 g of preweighed silica gel from its container to the fourth impinger. More silica gel may be used, but care should be taken to ensure that it is not entrained and carried out from the impinger during sampling. Place the container in a clean place for later use in the sample recovery. Alternatively, the weight of the silica gel plus impinger may be determined to the nearest 0.5 g and recorded.

Using a tweezer or clean disposable surgical gloves, place a labeled (identified) and weighed filter in the filter holder. Be sure that the filter is properly centered and the gasket properly placed so as to prevent the sample gas stream from circumventing the filter. Check the filter for tears after assembly is completed.

When glass liners are used, install the selected nozzle using a Viton A O-ring when stack temperatures are less than 260 °C (500 °F) and an asbestos string gasket when temperatures are higher. See APTD–0576 for details. Other connecting systems using either 316 stainless steel or Teflon ferrules may be used. When metal liners are used, install the nozzle as above or by a leak-free direct mechanical connection. Mark the probe with heat resistant tape or by some other method to denote the proper distance into the stack or duct for each sampling point.

Set up the train as in Figure 5–1, using (if necessary) a very light coat of silicone grease on all ground glass joints, greasing only the outer portion (see APTD–0576) to avoid possibility of contamination by the silicone grease. Subject to the approval of the Administrator, a glass cyclone may be used between the probe and filter holder when the total particulate catch is expected to exceed 100 mg or when water droplets are present in the stack gas.

Place crushed ice around the impingers.

4.1.4 Leak-Check Procedures.

4.1.4.1 Pretest Leak-Check. A pretest leak-check is recommended, but not required. If the tester opts to conduct the pretest leak-check, the following procedure shall be used.

After the sampling train has been assembled, turn on and set the filter and probe heating systems at the desired operating temperatures. Allow time for the temperatures to stabilize. If a Viton A O-ring or other leak-free connection is used in assembling the probe nozzle to the probe liner, leak-check the train at the sampling site by plugging the nozzle and pulling a 380 mm Hg (15 in. Hg) vacuum.

NOTE: A lower vacuum may be used, provided that it is not exceeded during the test.

If an asbestos string is used, do not connect the probe to the train during the leak-check. Instead, leak-check the train by first plugging the inlet to the filter holder (cyclone, if applicable) and pulling a 380 mm Hg (15 in. Hg) vacuum (see Note immediately above). Then connect the probe to the train and leak-check at about 25 mm Hg (1 in. Hg) vacuum; alternatively, the probe may be leak-checked with the rest of the sampling train, in one step, at 380 mm Hg (15 in. Hg) vacuum. Leakage rates in excess of 4 percent of the average sampling rate or 0.00057 m^3/min (0.02 cfm), whichever is less, are unacceptable.

The following leak-check instructions for the sampling train described in APTD–0576 and APTD–0581 may be helpful. Start the pump with bypass valve fully open and coarse adjust valve, completely closed. Partially open the coarse adjust valve and slowly close the bypass valve until the desired vacuum is reached. Do not reverse direction of bypass valve; this will cause water to back up into the filter holder. If the desired vacuum is exceeded, either leak-check at this higher vacuum or end the leak-check as shown below and start over.

When the leak-check is completed, first slowly remove the plug from the inlet to the probe, filter holder, or cyclone (if applicable) and immediately turn off the vacuum pump. This prevents the water in the impingers from being forced backward into the filter holder and silica gel from being entrained backward into the third impinger.

4.1.4.2 Leak-Checks During Sample Run. If, during the sampling run, a component (e.g., filter assembly or impinger) change becomes necessary, a leak-check shall be conducted immediately before the change is made. The leak-check shall be done according to the procedure outlined in Section 4.1.4.1 above, except that it shall be done at a vacuum equal to or greater than the maximum value recorded up to that point in the test. If the leakage rate is found to be no greater than 0.00057 m^3/min (0.02 cfm) or 4 percent of the average sampling rate (whichever is less), the results are acceptable, and

no correction will need to be applied to the total volume of dry gas metered; if, however, a higher leakage rate is obtained, the tester shall either record the leakage rate and plan to correct the sample volume as shown in Section 6.3 of this method, or shall void the sampling run.

Immediately after component changes, leak-checks are optional; if such leak-checks are done, the procedure outlined in Section 4.1.4.1 above shall be used.

4.1.4.3 Post-test Leak-Check. A leak-check is mandatory at the conclusion of each sampling run. The leak-check shall be done in accordance with the procedures outlined in Section 4.1.4.1, except that it shall be conducted at a vacuum equal to or greater than the maximum value reached during the sampling run. If the leakage rate is found to be no greater than 0.00057 m^3/min (0.02 cfm) or 4 percent of the average sampling rate (whichever is less), the results are acceptable, and no correction need be applied to the total volume of dry gas metered. If, however, a higher leakage rate is obtained, the tester shall either record the leakage rate and correct the sample volume as shown in Section 6.3 of this method, or shall void the sampling run.

4.1.5 Particulate Train Operation. During the sampling run, maintain an isokinetic sampling rate (within 10 percent of true isokinetic unless otherwise specified by the Administrator) and a temperature around the filter of 120±14 °C (248±25 °F), or such other temperature as specified by an applicable subpart of the standards or approved by the Administrator.

For each run, record the data required on a data sheet such as the one shown in Figure 5–2. Be sure to record the initial dry gas meter reading. Record the dry gas meter readings at the beginning and end of each sampling time increment, when changes in flow rates are made, before and after each leak-check, and when sampling is halted. Take other readings required by Figure 5–2 at least once at each sample point during each time increment and additional readings when significant changes (20 percent variation in velocity head readings) necessitate additional adjustments in flow rate. Level and zero the manometer. Because the manometer level and zero may drift due to vibrations and temperature changes, make periodic checks during the traverse.

Clean the portholes prior to the test run to minimize the chance of sampling deposited material. To begin sampling, remove the nozzle cap, verify that the filter and probe heating systems are up to temperature, and that the pitot tube and probe are properly positioned. Position the nozzle at the first traverse point with the tip pointing directly into the gas stream. Immediately start the pump and adjust the flow to isokinetic conditions. Nomographs are available, which aid in the rapid adjustment of the isokinetic sampling rate without excessive computations. These nomographs are designed for use when the Type S pitot tube coefficient is 0.85±0.02, and the stack gas equivalent density (dry molecular weight) is equal to 29±4. APTD–0576 details the procedure for using the nomographs. If C_p and M_d are outside the above stated ranges do not use the nomographs unless appropriate steps (see Citation 7 in Bibliography) are taken to compensate for the deviations.

FIGURE 5–2—PARTICULATE FIELD DATA

Plant .....
Location .....
Operator .....
Date .....
Run No .....
Sample box No .....
Meter box No .....
Meter Δ H@ .....
C factor .....
Pitot tube coefficient, Cp .....

Ambient temperature .....
Barometric pressure .....
Assumed moisture, % .....
Probe length, m. (ft.) .....
Nozzle identification No. .....
Average calibrated nozzle diameter, cm (in.) .....
Probe heater setting .....
Leak rate, m^3/min, (cfm) .....
Probe liner material .....
Static pressure, mm. Hg (in. Hg) .....
Filter No. .....

SCHEMATIC OF STACK CROSS SECTION

Traverse point number	Sampling time	Vacuum	Stack temperature	Velocity head	Pressure differential across orifice meter	Gas sample volume	Gas sample temperature at dry gas meter		Filter holder temperature	Temperature of gas leaving condenser or last impinger
							Inlet	Outlet		
	(e). min.	mm Hg (in. Hg)	(T_S). °C (°F)	(Δ P_S). mm (in.) H_20	mm H_20 (in. H_20)	m^3 (ft^3)	°C (°F)	°C (°F)	°C (°F)	°C (°F)
Total										
Average										

When the stack is under significant negative pressure (height of impinger stem), take care to close the coarse adjust valve before inserting the probe into the stack to prevent water from backing into the filter holder. If necessary, the pump may be turned on with the coarse adjust valve closed.

When the probe is in position, block off the openings around the probe and porthole to prevent unrepresentative dilution of the gas stream.

Traverse the stack cross-section, as required by Method 1 or as specified by the Administrator, being careful not to bump the probe nozzle into the stack walls when sampling near the walls or when removing or inserting the probe through the portholes; this minimizes the chance of extracting deposited material.

During the test run, make periodic adjustments to keep the temperature around the filter holder at the proper level; add more ice and, if necessary, salt to maintain a temperature of less than 20 °C (68 °F) at the condenser/silica gel outlet. Also, periodically check the level and zero of the manometer.

If the pressure drop across the filter becomes too high, making isokinetic sampling difficult to maintain, the filter may be replaced in the midst of a sample run. It is recommended that another complete filter assembly be used rather than attempting to change the filter itself. Before a new filter assembly is installed, conduct a leak-check (see Section 4.1.4.2). The total particulate weight shall include the summation of all filter assembly catches.

A single train shall be used for the entire sample run, except in cases where simultaneous sampling is required in two or more separate ducts or at two or more different locations within the same duct, or, in cases where equipment failure necessitates a change of trains. In all other situations, the use of two or more trains will be subject to the approval of the Administrator.

Note that when two or more trains are used, separate analyses of the front-half and (if applicable) impinger catches from each train shall be performed, unless identical nozzle sizes were used on all trains, in which case, the front-half catches from the individual trains may be combined (as may the impinger catches) and one analysis of front-half catch and one analysis of impinger catch may be performed. Consult with the Administrator for details concerning the calculation of results when two or more trains are used.

At the end of the sample run, turn off the coarse adjust valve, remove the probe and nozzle from the stack, turn off the pump, record the final dry gas meter reading, and conduct a post-test leak-check, as outlined in Section 4.1.4.3. Also, leak-check the pitot lines as described in Method 2, Section 3.1; the lines must pass this leak-check, in order to validate the velocity head data.

4.1.6 Calculation of Percent Isokinetic. Calculate percent isokinetic (see Calculations, Section 6) to determine whether the run was valid or another test run should be made. If there was difficulty in maintaining isokinetic rates due to source conditions, consult with the Administrator for possible variance on the isokinetic rates.

4.2 Sample Recovery. Proper cleanup procedure begins as soon as the probe is removed from the stack at the end of the sampling period. Allow the probe to cool.

When the probe can be safely handled, wipe off all external particulate matter near the tip of the probe nozzle and place a cap over it to prevent losing or gaining particulate matter. Do not cap off the probe tip tightly while the sampling train is cooling down as this would create a vacuum in the filter holder, thus drawing water from the impingers into the filter holder.

Before moving the sample train to the cleanup site, remove the probe from the sample train, wipe off the silicone grease, and cap the open outlet of the probe. Be careful not to lose any condensate that might be present. Wipe off the silicone grease from the filter inlet where the probe was fastened and cap it. Remove the umbilical cord from the last impinger and cap the impinger. If a flexible line is used between the first impinger or condenser and the filter holder, disconnect the line at the filter holder and let any condensed water or liquid drain into the impingers or condenser. After wiping off the silicone grease, cap off the filter holder outlet and impinger inlet. Either ground-glass stoppers, plastic caps, or serum caps may be used to close these openings.

Transfer the probe and filter-impinger assembly to the cleanup area. This area should be clean and protected from the wind so that the chances of contaminating or losing the sample will be minimized.

Save a portion of the acetone used for cleanup as a blank. Take 200 ml of this acetone directly from the wash bottle being used and place it in a glass sample container labeled ''acetone blank.''

Inspect the train prior to and during disassembly and note any abnormal conditions. Treat the samples as follows:

Container No. 1. Carefully remove the filter from the filter holder and place it in its identified petri dish container. Use a pair of tweezers and/or clean disposable surgical gloves to handle the filter. If it is necessary to fold the filter, do so such that the particulate cake is inside the fold. Carefully transfer to the petri dish any particulate matter and/or filter fibers which adhere to the filter holder gasket, by using a dry Nylon bristle brush and/or a sharp-edged blade. Seal the container.

Container No. 2. Taking care to see that dust on the outside of the probe or other exterior surfaces does not get into the sample, quantitatively recover particulate matter or any condensate from the probe nozzle, probe fitting, probe liner, and front half of the filter holder by washing these components with acetone and placing the wash in a glass container. Distilled water may be used instead of acetone when approved by the Administrator and shall be used when specified by the Administrator; in these cases, save a water blank and follow the Administrator's directions on analysis. Perform the acetone rinses as follows:

Carefully remove the probe nozzle and clean the inside surface by rinsing with acetone from a wash bottle and brushing with a Nylon bristle brush. Brush until the acetone rinse shows no visible particles, after which make a final rinse of the inside surface with acetone.

Brush and rinse the inside parts of the Swagelok fitting with acetone in a similar way until no visible particles remain.

Rinse the probe liner with acetone by tilting and rotating the probe while squirting acetone into its upper end so that all inside surfaces will be wetted with acetone. Let the acetone drain from the lower end into the sample container. A funnel (glass or polyethylene) may be used to aid on transferring liquid washes to the container. Follow the acetone rinse with a probe brush. Hold the probe in an inclined position, squirt acetone into the upper end as the probe brush is being pushed with a twisting action through the probe; hold a sample container underneath the lower end of the probe, and catch any acetone and particulate matter which is brushed from the probe. Run the brush through the probe three times or more until no visible particulate matter is carried out with the acetone or until none remains in the probe liner on visual inspection. With stainless steel or other metal probes, run the brush through in the above prescribed manner at least six times since metal probes have small crevices in which particulate matter can be entrapped. Rinse the brush with acetone, and quantitatively collect these washings in the sample container. After the brushing, make a final acetone rinse of the probe as described above.

It is recommended that two people clean the probe to minimize sample losses. Between sampling runs, keep brushes clean and protected from contaminations.

After ensuring that all joints have been wiped clean of silicone grease, clean the inside of the front half of the filter holder by rubbing the surfaces with a Nylon bristle brush and rinsing with acetone. Rinse each surface three times or more if needed to remove visible particulate. Make a final rinse of the brush and filter holder. Carefully rinse out the glass cyclone, also (if applicable). After all acetone washings and particulate matter have been collected in the sample container, tighten the lid on the sample container so that acetone will not leak out when it is shipped to the laboratory. Mark the height of the fluid level to determine whether or not leakage occured during transport. Label the container to clearly identify its contents.

Container No. 3. Note the color of the indicating silica gel to determine if it has been completely spent and make a notation of its condition. Transfer the silica gel from the fourth impinger to its original container and seal. A funnel may make it easier to pour the silica gel without spilling. A rubber policeman may be used as an aid in removing the silica gel from the impinger. It is not necessary to remove the small amount of dust particles that may adhere to the impinger wall and are difficult to remove. Since the gain in weight is to be used for moisture calculations, do not use any water or other liquids to transfer the silica gel. If a balance is available in the field, follow the procedure for container No. 3 in Section 4.3.

Impinger Water. Treat the impingers as follows; Make a notation of any color or film in the liquid catch. Measure the liquid which is in the first three impingers to within ±1 ml by using a graduated cylinder or by weighing it to within ±0.5 g by using a balance (if one is available). Record the volume or weight of liquid present. This information is required to calculate the moisture content of the effluent gas.

Discard the liquid after measuring and recording the volume or weight, unless analysis of the impinger catch is required (see Note, Section 2.1.7).

If a different type of condenser is used, measure the amount of moisture condensed either volumetrically or gravimetrically.

Whenever possible, containers should be shipped in such a way that they remain upright at all times.

4.3 Analysis. Record the data required on a sheet such as the one shown in Figure 5–3. Handle each sample container as follows:

FIGURE 5–3—ANALYTICAL DATA

Plant
Date
Run No.
Filter No.
Amount liquid lost during transport
Acetone blank volume, ml
Acetone wash volume, ml
Acetone blank concentration, mg/mg (Equation 5–4)
Acetone wash blank, mg (Equation 5–5)

Container number	Weight of particulate collected, mg		
	Final weight	Tare weight	Weight gain
1.			

Container number	Weight of particulate collected, mg		
	Final weight	Tare weight	Weight gain
2.			
Total.			
Less acetone blank.			
Weight of particulate matter.			

	Volume of liquid water collected	
	Impinger volume, ml	Silica gel weight, g
Final.		
Initial.		
Liquid collected.		
Total volume collected		g* ml

*Convert weight of water to volume by dividing total weight increase by density of water (1 g/ml).

$$\frac{\text{Increase, g}}{(1\ \text{g/ml})} = \text{Volume water, ml}$$

Container No. 1. Leave the contents in the shipping container or transfer the filter and any loose particulate from the sample container to a tared glass weighing dish. Desiccate for 24 hours in a desiccator containing anhydrous calcium sulfate. Weigh to a constant weight and report the results to the nearest 0.1 mg. For purposes of this Section, 4.3, the term ''constant weight'' means a difference of no more than 0.5 mg or 1 percent of total weight less tare weight, whichever is greater, between two consecutive weighings, with no less than 6 hours of desiccation time between weighings.

Alternatively, the sample may be oven dried at 105 °C (220 °F) for 2 to 3 hours, cooled in the desiccator, and weighed to a constant weight, unless otherwise specified by the Administrator. The tester may also opt to oven dry the sample at 105 °C (220 °F) for 2 to 3 hours, weigh the sample, and use this weight as a final weight.

Container No. 2. Note the level of liquid in the container and confirm on the analysis sheet whether or not leakage occurred during transport. If a noticeable amount of leakage has occurred, either void the sample or use methods, subject to the approval of the Administrator, to correct the final results. Measure the liquid in this container either volumetrically to ±1 ml or gravimetrically to ±0.5 g. Transfer the contents to a tared 250-ml beaker and evaporate to dryness at ambient temperature and pressure. Desiccate for 24 hours and weigh to a constant weight. Report the results to the nearest 0.1 mg.

Container No. 3. Weigh the spent silica gel (or silica gel plus impinger) to the nearest 0.5 g using a balance. This step may be conducted in the field.

''Acetone Blank'' Container. Measure acetone in this container either volumetrically or gravimetrically. Transfer the acetone to a tared 250-ml beaker and evaporate to dryness at ambient temperature and pressure. Desiccate for 24 hours and weigh to a constant weight. Report the results to the nearest 0.1 mg.

NOTE: At the option of the tester, the contents of Container No. 2 as well as the acetone blank container may be evaporated at temperatures higher than ambient. If evaporation is done at an elevated temperature, the temperature must be below the boiling point of the solvent; also, to prevent ''bumping,'' the evaporation process must be closely supervised, and the contents of the beaker must be swirled occasionally to maintain an even temperature. Use extreme care, as acetone is highly flammable and has a low flash point.

4.4 Quality Control Procedures. The following quality control procedures are suggested to check the volume metering system calibration values at the field test site prior to sample collection. These procedures are optional for the tester.

4.4.1 Meter Orifice Check. Using the calibration data obtained during the calibration procedure described in Section 5.3, determine the Δ H@ for the metering system orifice. The Δ H@ is the orifice pressure differential in units of in. H_2O that correlates to 0.75 cfm of air at 528° R and 29.92 in. Hg. The Δ H@ is calculated as follows:

$$\Delta H_{@} = 0.0319\ \Delta H \frac{T_m}{P_{bar}} \frac{\theta^2}{Y^2 V^2{}_m} \quad \text{Eq. 5-9}$$

Where:

ΔH=Average pressure differential across the orifice meter, in. H_2O.

T_m=Absolute average dry gas meter temperature, ° R.

P_{bar}=Barometric pressure, in. Hg.

Θ=Total sampling time, min.

Y=Dry gas meter calibration factor, dimensionless.

V_m=Volume of gas sample as measured by dry gas meter, dcf.

0.0319=(0.0567 in. Hg/° R) x (0.75 cfm)^2.

Before beginning the field test (a set of three runs usually constitutes a field test), operate the metering system (i.e., pump, volume meter, and orifice) at the Δ H@ pressure differential for 10 minutes. Record the volume collected, the dry gas meter temperature, and the barometric pressure. Calculate a dry gas meter calibration check value, Y_c, as follows:

$$Y_c = \frac{10}{V_m}\left[\frac{0.0319\ T_m}{P_{bar}}\right]^{1/2}$$

Eq. 5–10

Where:

Y_c=Dry gas meter calibration check value, dimensionless.

10=10 minutes of run time.

Compare the Y_c value with the dry gas meter calibration factor Y to determine that:

$0.97Y < Y_c < 1.03Y$

If the Y_c value is not within this range, the volume metering system should be investigated before beginning the test.

4.4.2 Calibrated Critical Orifice. A calibrated critical orifice, calibrated against a wet test meter or spirometer and designed to be inserted at the inlet of the sampling meter box may be used as a quality control check by following the procedure of Section 7.2.

5. *Calibration*

Maintain a laboratory log of all calibrations.

5.1 Probe Nozzle. Probe nozzles shall be calibrated before their initial use in the field. Using a micrometer, measure the inside diameter of the nozzle to the nearest 0.025 mm (0.001 in.). Make three separate measurements using different diameters each time, and obtain the average of the measurements. The difference between the high and low numbers shall not exceed 0.1 mm (0.004 in.). When nozzles become nicked, dented, or corroded, they shall be reshaped, sharpened, and recalibrated before use. Each nozzle shall be permanently and uniquely identified.

5.2 Pitot Tube. The Type S pitot tube assembly shall be calibrated according to the procedure outlined in Section 4 of Method 2.

5.3 Metering System.

5.3.1 Calibration Prior to Use. Before its initial use in the field, the metering system shall be calibrated as follows: Connect the metering system inlet to the outlet of a wet test meter that is accurate to within 1 percent. Refer to Figure 5.5. The wet test meter should have a capacity of 30 liters/rev (1 ft^3/rev). A spirometer of 400 liters (14 ft^3) or more capacity, or equivalent, may be used for this calibration, although a wet test meter is usually more practical. The wet test meter should be periodically calibrated with a spirometer or a liquid displacement meter to ensure the accuracy of the wet test meter. Spirometers or wet test meters of other sizes may be used, provided that the specified accuracies of the procedure are maintained. Run the metering system pump for about 15 minutes with the orifice manometer indicating a median reading as expected in field use to allow the pump to warm up and to permit the interior surface of the wet test meter to be thoroughly wetted. Then, at each of a minimum of three orifice manometer settings, pass an exact quantity of gas through the wet test meter and note the gas volume indicated by the dry gas meter. Also note the barometric pressure, and the temperatures of the wet test meter, the inlet of the dry gas meter, and the outlet of the dry gas meter. Select the highest and lowest orifice settings to bracket the expected field operating range of the orifice. Use a minimum volume of 0.15 m^3 (5 cf) at all orifice settings. Record all the data on a form similar to Figure 5.6, and calculate Y, the dry gas meter calibration factor, and ΔH@, the orifice calibration factor, at each orifice setting as shown on Figure 5.6. Allowable tolerances for individual Y and ΔH@, values are given in Figure 5.6. Use the average of the Y values in the calculations in Section 6.

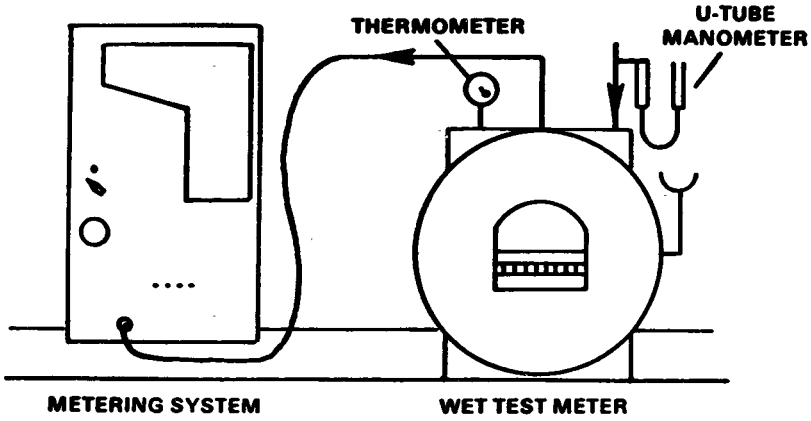

Figure 5.5 Equipment arrangement for metering system calibration.

Date_____ Metering System Identification:_____

Barometric pressure, P_b = _____ in. Hg

Orifice manometer setting ΔH in. H_2O	Spirometer (wet meter) gas volume V_w ft^3	Dry gas meter volume V_m ft^3	Temperatures: Spirometer (wet meter) t_w °F	Dry Gas Meter: Inlet t_i °F	Outlet t_o °F	Average t_m °F	Time θ min

Calculations

ΔH in. H_2O	Y: $\frac{V_w P_b (t_m + 460)}{V_m \left[P_b + \frac{\Delta H}{13.6}\right] (t_w + 460)}$	$\Delta H@$: $\frac{0.0317\ \Delta H}{P_b (t_o + 460)} \left[\frac{(t_w + 460)\ \theta}{V_w}\right]^2$
Average		

Y = Ratio of reading of wet test meter to dry test meter; tolerance for individual values ±0.02 from average.

$\Delta H@$ = Orifice pressure differential that equates to 0.75 cfm of air @ 68°F and 29.92 inches of mercury, in. H_2O; tolerance for individual values ±0.20 from average.

Figure 5.6. Example data sheet for calibration of metering system (English units).

Before calibrating the metering system, it is suggested that a leak-check be conducted. For metering systems having diaphragm pumps, the normal leak-check procedure will not detect leakages within the pump. For these cases the following leak-check procedure is suggested: make a 10-minute calibration run at 0.00057 m^3/min (0.02 cfm); at the end of the run, take the difference of the measured wet test meter and dry gas meter volumes; divide the difference by 10, to get the leak rate. The leak rate should not exceed 0.00057 m^3/min (0.02 cfm).

5.3.2 Calibration After Use. After each field use, the calibration of the metering system shall be checked by performing three calibration runs at a single, intermediate orifice setting (based on the previous field test), with the vacuum set at the maximum value reached during the test series. To adjust the vacuum, insert a valve between the wet test meter and the inlet of the metering system. Calculate the average value of the dry gas meter calibration factor. If the value has changed by more than 5 percent, recalibrate the meter over the full range of orifice settings, as previously detailed.

Alternative procedures, e.g., rechecking the orifice meter coefficient may be used, subject to the approval of the Administrator.

5.3.3 Acceptable Variation in Calibration. If the dry gas meter coefficient values obtained before and after a test series differ by more than 5 percent, the test series shall either be voided, or calculations for the test series shall be performed using whichever meter coefficient value (i.e., before or after) gives the lower value of total sample volume.

5.4 Probe Heater Calibration. The probe heating system shall be calibrated before its initial use in the field.

Use a heat source to generate air heated to selected temperatures that approximate those expected to occur in the sources to be sampled. Pass this air through the probe at a typical simple flow rate while measuring the probe inlet and outlet temperatures at various probe heater settings. For each air temperature generated, construct a graph of probe heating system setting versus probe outlet temperature. The procedure outlined in APTD–0576 can also be used. Probes constructed according to APTD–0581 need not be calibrated if the calibration curves in APTD–0576 are used. Also, probes with outlet temperature monitoring capabilities do not require calibration.

5.5 Temperature Gauges. Use the procedure in Section 4.3 of Method 2 to calibrate in-stack temperature gauges. Dial thermometers, such as are used for the dry gas meter and condenser outlet, shall be calibrated against mercury-in-glass thermometers.

5.6 Leak Check of Metering System Shown in Figure 5–1. That portion of the sampling train from the pump to the orifice meter should be leak checked prior to initial use and after each shipment. Leakage after the pump will result in less volume being recorded than is actually sampled. The following procedure is suggested (see Figure 5–4): Close the main valve on the meter box. Insert a one-hole rubber stopper with rubber tubing attached into the orifice exhaust pipe. Disconnect and vent the low side of the orifice manometer. Close off the low side orifice tap. Pressurize the system to 13 to 18 cm (5 to 7 in.) water column by blowing into the rubber tubing. Pinch off the tubing and observe the manometer for one minute. A loss of pressure on the manometer indicates a leak in the meter box; leaks, if present, must be corrected.

5.7 Barometer. Calibrate against a mercury barometer.

6. *Calculations*

Carry out calculations, retaining at least one extra decimal figure beyond that of the acquired data. Round off figures after the final calculation. Other forms of the equations may be used as long as they give equivalent results.

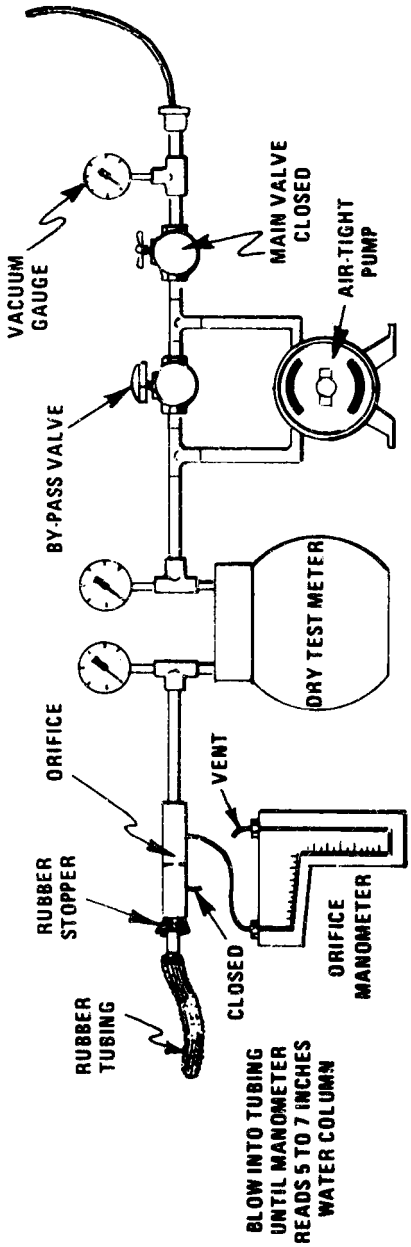

Figure 5-4. Leak check of meter box.

6.1 Nomenclature.

A_n=Cross-sectional area of nozzle, $m^2(ft^2)$.

B_{ws}=Water vapor in the gas stream, proportion by volume.

C_a=Acetone blank residue concentration, mg/mg.

c_s=Concentration of particulate matter in stack gas, dry basis, corrected to standard conditions, g/dscm (g/dscf).

I=Percent of isokinetic sampling.

L_a=Maximum acceptable leakage rate for either a pretest leak check or for a leak check following a component change; equal to 0.00057 m^3/min (0.02 cfm) or 4 percent of the average sampling rate, whichever is less.

L_i=Individual leakage rate observed during the leak check conducted prior to the "i^{th}" component change (i=1, 2, 3....n), m^3/min (cfm).

L_p=Leakage rate observed during the post-test leak check, m^3/min (cfm).

m_a=Mass of residue of acetone after evaporation, mg.

m_n=Total amount of particulate matter collected, mg.

M_w=Molecular weight of water, 18.0 g/g-mole (18.0lb/lb-mole).

P_{bar}=Barometric pressure at the sampling site, mm Hg (in. Hg).

P_s=Absolute stack gas pressure, mm Hg (in. Hg).

P_{std}=Standard absolute pressure, 760 mm Hg (29.92 in. Hg).

R=Ideal gas constant, 0.06236 mm Hg-m^3/°K-g-mole (21.85 in. Hg-ft^3/°R-lb-mole).

T_m=Absolute average dry gas meter temperature (see Figure 5–2), °K (°R).

T_s=Absolute average stack gas temperature (see Figure 5–2), °K (°R).

T_{std}=Standard absolute temperature, 293°K (528° R).

V_a=Volume of acetone blank, ml.

V_{aw}=Volume of acetone used in wash, ml.

V_{lc}=Total volume of liquid collected in impingers and silica gel (see Figure 5–3), ml.

V_m=Volume of gas sample as measured by dry gas meter, dcm (dscf).

$V_{m(std)}$=Volume of gas sample measured by the dry gas meter, corrected to standard conditions, dscm (dscf).

$V_{w(std)}$=Volume of water vapor in the gas sample, corrected to standard conditions, scm (scf).

v_s=Stack gas velocity, calculated by Method 2, Equation 2–9, using data obtained from Method 5, m/sec (ft/sec).

W_a=Weight of residue in acetone wash, mg.

Y=Dry gas meter calibration factor.

ΔH=Average pressure differential across the orifice meter (see Figure 5–2), mm H_2O (in. H_2O).

ϕ_a=Density of acetone, mg/ml (see label on bottle).

ϕ_w=Density of water, 0.9982 g/ml (0.002201 lb/ml).

ε=Total sampling time, min.

ε_1=Sampling time interval, from the beginning of a run until the first component change, min.

ε_i=Sampling time interval, between two successive component changes, beginning with the interval between the first and second changes, min.

ε_p=Sampling time interval, from the final (n^{th}) component change until the end of the sampling run, min.

13.6=Specific gravity of mercury.

60=Sec/min.

100=Conversion to percent.

6.2 Average Dry Gas Meter Temperature and Average Orifice Pressure Drop. See data sheet (Figure 5–2).

6.3 Dry Gas Volume. Correct the sample volume measured by the dry gas meter to standard conditions (20 °C, 760 mm Hg or 68 °F, 29.92 in. Hg) by using Equation 5–1.

$$V_{m(std)} = V_m Y \left(\frac{T_{std}}{T_m}\right)\left[\frac{P_{bar} + \frac{\Delta H}{13.6}}{P_{std}}\right] = K_1 V_m Y \frac{P_{bar} + (\Delta H/13.6)}{T_m}$$

Equation 5–1

Where;

K_1=0.3858 °K/mm Hg for metric units

=17.64 °R/in. Hg for English units

NOTE: Equation 5–1 can be used as written unless the leakage rate observed during any of the mandatory leak checks (i.e., the post-test leak check or leak checks conducted prior to component changes) exceeds L_a. If L_p or $_i$ exceeds L_a, Equation 5–1 must be modified as follows:

(a) Case I. No component changes made during sampling run. In this case, replace V_m in Equation 5–1 with the expression:

$[V_m—(L_p—L_a)\theta]$

(b) Case II. One or more component changes made during the sampling run. In this case, replace V_m in Equation 5–1 by the expression:

$$\left[V_m - (L_1 - L_a)\theta_1 - \sum_{i=2}^{n} (L_i - L_a)\theta_i - (L_p - L_a)\theta_p\right]$$

and substitute only for those leakage rates (L_i or L_p) which exceed L_a.

6.4 Volume of Water Vapor.

$$V_{w(std)} = \frac{V_{lc}\,\rho_w\,R\,T_{std}}{M_w\,P_{std}} = K_2\,V_{lc}$$

Eq. 5-2

Where:

K_2=0.001333 m^3/ml for metric units

=0.04707 ft^3/ml for English units.

6.5 Moisture Content.

$$B_{ws} = \frac{V_{w(std)}}{V_{m(std)} + V_{w(std)}} \quad \text{Eq. 5-3}$$

NOTE: In saturated or water droplet-laden gas streams, two calculations of the moisture content of the stack gas shall be made, one from the impinger analysis (Equation 5–3), and a second from the assumption of saturated conditions. The lower of the two values of B_{ws} shall be considered correct. The procedure for determining the moisture content based upon assumption of saturated conditions is given in the Note of Section 1.2 of Method 4. For the purposes of this method, the average stack gas temperature from Figure 5–2 may be used to make this determination, provided that the accuracy of the in-stack temperature sensor is ±1 °C (2 °F).

6.6 Acetone Blank Concentration.

$$C_a = \frac{m_a}{V_a \rho_a} \quad \text{Eq. 5-4}$$

6.7 Acetone Wash Blank.

$$W_a = C_a V_{aw} \rho_a \quad \text{Eq. 5-5}$$

6.8 Total Particulate Weight. Determine the total particulate catch from the sum of the weights obtained from Containers 1 and 2 less the acetone blank (see Figure 5–3).

NOTE: Refer to Section 4.1.5 to assist in calculation of results involving two or more filter assemblies or two or more sampling trains.

6.9 Particulate Concentration.

$$c_s = (0.001\ g/mg)\ (m_n/V_{m(std)}) \quad \text{Eq. 5–6}$$

6.10 Conversion Factors:

From	To	Multiply by
scf	m^3	0.02832.
g	*mg*	0.001
g/ft^3	gr/ft^3	15.43.
g/ft^3	lb/ft^3	2.205×10^{-3}.
g/ft^3	g/m^3	35.31.

6.11 Isokinetic Variation.

6.11.1 Calculation From Raw Data.

$$I = \frac{100T_s\left[K_3V_{1c} + \left(V_mY/T_m\right)\left(P_{bar} + \Delta H/13.6\right)\right]}{60\theta V_s P_s A_n} \quad \text{Eq. 5-7}$$

Where:

K_3=0.003454 mm Hg−m^3/ml−°K for metric units.

=0.002669-in. Hg−ft^3/ml−°R for English units.

6.11.2 Calculation From Intermediate Values.

$$I = \frac{100\ T_s\ V_{m(std)}\ P_{std}}{60\ T_{std}\ v_s\ \theta\ A_n\ P_s\ (1 - B_{ws})} = \frac{K_4\ T_s\ V_{m(std)}}{P_s\ v_s\ A_n\ \theta\ (1 - B_{ws})} \quad \text{Eq. 5-8}$$

Where:

K_4=4.320 for metric units

=0.09450 for English units.

6.12 Acceptable Results. If 90 percent ≤ I ≤ 110 percent, the results are acceptable. If the particulate results are low in comparison to the standard, and I is over 110 percent or less than 90 percent, the Administrator may accept the results. Citation 4 in the bibliography section can be used to make acceptability judgments. If I is judged to be unacceptable, reject the particulate results and repeat the test.

6.13 Stack Gas Velocity and Volumetric Flow Rate. Calculate the average stack gas velocity and volumetric flow rate, if needed, using data obtained in this method and the equations in Sections 5.2 and 5.3 of Method 2.

7. *Alternative Procedures*

7.1 Dry Gas Meter as a Calibration Standard. A dry gas meter may be used as a calibration standard for volume measurements in place of the wet test meter specified in Section 5.3, provided that it is calibrated initially and recalibrated periodically as follows:

7.1.1 Standard Dry Gas Meter Calibration.

7.1.1.1 The dry gas meter to be calibrated and used as a secondary reference meter should be of high quality and have an appropriately sized capacity, e.g., 3 liters/rev (0.1 ft^3/rev). A spirometer (400 liters or more capacity), or equivalent, may be used for this calibration, although a wet test meter is usually more practical. The wet test meter should have a capacity of 30 liters/rev (1 ft^3/rev) and capable of measuring volume to within ±1.0 percent; wet test meters should be checked against a spirometer or a liquid displacement meter to ensure the accuracy of the wet test meter. Spirometers or wet test meters of other sizes may be used, provided that the specified accuracies of the procedure are maintained.

7.1.1.2 Set up the components as shown in Figure 5.7. A spirometer, or equivalent, may

be used in place of the wet test meter in the system. Run the pump for at least 5 minutes at a flow rate of about 10 liters/min (0.35 cfm) to condition the interior surface of the wet test meter. The pressure drop indicated by the manometer at the inlet side of the dry gas meter should be minimized [no greater than 100 mm H_2O (4 in. H_2O) at a flow rate of 30 liters/min (1 cfm)]. This can be accomplished by using large diameter tubing connections and straight pipe fittings.

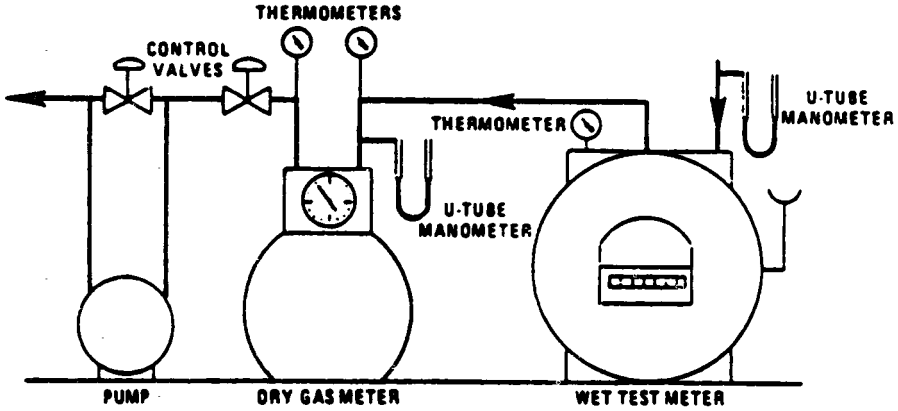

Figure 5.7 . Equipment arrangement for dry-gas meter calibration.

7.1.1.3 Collect the data as shown in the example data sheet (see Figure 5–8). Make triplicate runs at each of the flow rates and at no less than five different flow rates. The range of flow rates should be between 10 and 34 liters/min (0.35 and 1.2 cfm) or over the expected operating range.

DATE: _____

DRY GAS METER IDENTIFICATION: _____

BAROMETRIC PRESSURE (P_b): _____ in. Hg

APPROXIMATE FLOW RATE ($\tilde{Q}$) cfm	SPIROMETER (WET METER) GAS VOLUME (V_s) ft^3	DRY GAS METER VOLUME (V_{dg}) ft^3	TEMPERATURES				DRY GAS METER PRESSURE (Δp) in. H_2O	TIME (Θ) min.	FLOW RATE (Q) cfm	METER METER COEFFICIENT (Y_{ds})	AVERAGE METER COEFFICIENT ($\bar{Y}_{ds}$)
			SPIROMETER (WET METER) (t_s) °F	DRY GAS METER INLET (t_i) °F	DRY GAS METER OUTLET (t_o) °F	DRY GAS METER AVERAGE ($\bar{t}_d$) °F					
0.40											
0.60											
0.80											
1.00											
1.20											

$$Q = 17.65 \cdot \frac{V_s}{\Theta} \cdot \frac{P_b}{(t_s + 460)}$$

$$Y_{ds} = \frac{V_s}{V_{dg}} \cdot \frac{(\bar{t}_d + 460)}{(t_s + 460)} \cdot \frac{P_b}{\left(P_b + \frac{\Delta p}{13.6}\right)}$$

Figure 5.8. Example data sheet for calibration of a standard dry gas meter for method 5 sampling equipment (English units).

7.1.1.4 Calculate flow rate, Q, for each run using the wet test meter gas volume, V_w, and the run time, θ. Calculate the dry gas meter coefficient, Y_{ds}, for each run. These calculations are as follows:

$$Q = K_1 \frac{P_{bar}}{t_w + t_{std}} \frac{V_w}{\theta}$$

$$Y_{ds} = \frac{V_w\left(t_{ds} + t_{std}\right)}{V_{ds}\left(t_w + t_{std}\right)} \frac{P_{bar}}{\left(P_{bar} + \frac{\Delta p}{13.6}\right)}$$

Where:

K_1=0.3858 for international system of units (SI); 17.64 for English units.

V_w=Wet test meter volume, liters (ft^3).

V_{ds}=Dry gas meter volume, liters (ft^3).

t_{ds}=Average dry gas meter temperature, ° C (° F).

t_{std}=273° C for SI units; 460° F for English units.

t_w=Average wet test meter temperature, ° C (° F).

P_{bar}=Barometric pressure, mm Hg (in. Hg).

Δp=Dry gas meter inlet differential pressure, mm H_2O (in. H_2O).

θ=Run time, min.

7.1.1.5 Compare the three Y_{ds} values at each of the flow rates and determine the maximum and minimum values. The difference between the maximum and minimum values at each flow rate should be no greater than 0.030. Extra sets of triplicate runs may be made in order to complete this requirement. In addition, the meter coefficients should be between 0.95 and 1.05. If these specifications cannot be met in three sets of successive triplicate runs, the meter is not suitable as a calibration standard and should not be used as such. If these specifications are met, average the three Y_{ds} values at each flow rate resulting in five average meter coefficients, Y_{ds}.

7.1.1.6 Prepare a curve of meter coefficient, Y_{ds}, versus flow rate, Q, for the dry gas meter. This curve shall be used as a reference when the meter is used to calibrate other dry gas meters and to determine whether recalibration is required.

7.1.2 Standard Dry Gas Meter Recalibration.

7.1.2.1 Recalibrate the standard dry gas meter against a wet test meter or spirometer annually or after every 200 hours of operation, whichever comes first. This requirement is valid provided the standard dry gas meter is kept in a laboratory and, if transported, cared for as any other laboratory instrument. Abuse to the standard meter may cause a change in the calibration and will require more frequent recalibrations.

7.1.2.2 As an alternative to full recalibration, a two-point calibration check may be made. Follow the same procedure and equipment arrangement as for a full recalibration, but run the meter at only two flow rates [suggested rates are 14 and 28 liters/min (0.5 and 1.0 cfm)]. Calculate the meter coefficients for these two points, and compare the values with the meter calibration curve. If the two coefficients are within ±1.5 percent of the calibration curve values at the same flow rates, the meter need not be recalibrated until the next date for a recalibration check.

7.2 Critical Orifices As Calibration Standards. Critical orifices may be used as calibration standards in place of the wet test meter specified in Section 5.3, provided that they are selected, calibrated, and used as follows:

7.2.1 Section of Critical Orifices.

7.2.1.1 The procedure that follows describes the use of hypodermic needles or stainless steel needle tubings which have been found suitable for use as critical orifices. Other materials and critical orifice designs may be used provided the orifices act as true critical orifices; i.e., a critical vacuum can be obtained, as described in Section 7.2.2.2.3. Select five critical orifices that are appropriately sized to cover the range of flow rates between 10 and 34 liters/min or the expected operating range. Two of the critical orifices should bracket the expected operating range.

A minimum of three critical orifices will be needed to calibrate a Method 5 dry gas meter (DGM); the other two critical orifices can serve as spares and provide better selection for bracketing the range of operating flow rates. The needle sizes and tubing lengths shown below give the following approximate flow rates:

Gauge/cm	Flow rate (liters/min)	Gauge/cm	Flow rate (liters/min)
12/7.6	32.56	14/2.5	19.54
12/10.2	30.02	14/5.1	17.27
13/2.5	25.77	14/7.6	16.14
13/5.1	23.50	15/3.2	14.16
13/7.6	22.37	15/7.6	11.61
13/10.2	20.67	15/10.2	10.48

7.2.1.2 These needles can be adapted to a Method 5 type sampling train as follows: Insert a serum bottle stopper, 13- by 20-mm sleeve type, into a ½-inch Swagelok quick connect. Insert the needle into the stopper as shown in Figure 5–9.

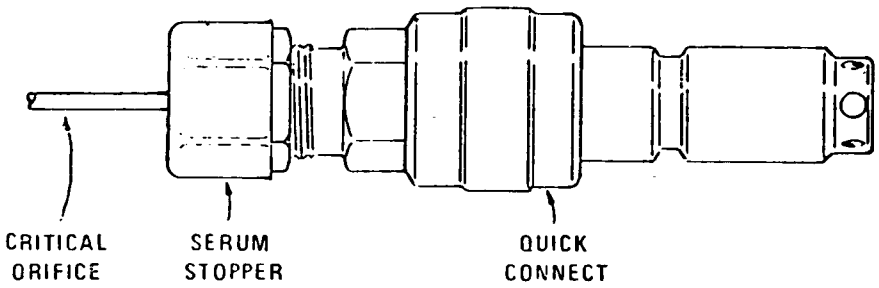

Figure 5-9. Critical orifice adaptation to Method 5 metering system.

7.2.2 Critical Orifice Calibration. The procedure described in this section uses the Method 5 meter box configuration with a DGM as described in Section 2.1.8 to calibrate the critical orifices. Other schemes may be used, subject to the approval of the Administrator.

7.2.2.1 Calibration of Meter Box. The critical orifices must be calibrated in the same configuration as they will be used; i.e., there should be no connections to the inlet of the orifice.

7.2.2.1.1 Before calibrating the meter box, leak check the system as follows: Fully open the coarse adjust valve, and completely close the by-pass valve. Plug the inlet. Then trun on the pump, and determine whether there is any leakage. The leakage rate shall be zero; i.e., no detectable movement of the DGM dial shall be seen for 1 minute.

7.2.2.1.2 Check also for leakages in that portion of the sampling train between the pump and the orifice meter. See Section 5.6 for the procedure; make any corrections, if necessary. If leakage is detected, check for cracked gaskets, loose fittings, worn O-rings, etc., and make the necessary repairs.

7.2.2.1.3 After determining that the meter box is leakless, calibrate the meter box according to the procedure given in Section 5.3. Make sure that the wet test meter meets the requirements stated in Section 7.1.1.1. Check the water level in the wet test meter. Record the DGM calibration factor, Y.

7.2.2.2 Calibration of Critical Orifices. Set up the apparatus as shown in Figure 5–10.

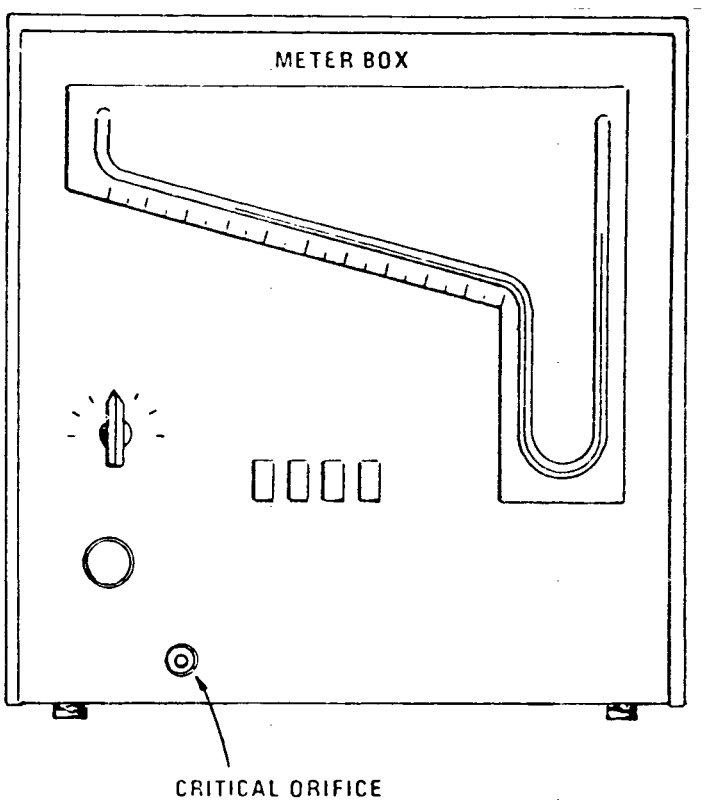

Figure 5-10. Apparatus setup.

7.2.2.2.1 Allow a warm-up time of 15 minutes. This step is important to equilibrate the temperature conditions through the DGM.

7.2.2.2.2 Leak check the system as in Section 7.2.2.1.1. The leakage rate shall be zero.

7.2.2.2.3 Before calibrating the critical orifice, determine its suitability and the appropriate operating vacuum as follows: Turn on the pump, fully open the coarse adjust valve, and adjust the by-pass valve to give a vacuum reading corresponding to about half of atmospheric pressure. Observe the meter box orifice manometer reading, H. Slowly increase the vacuum reading until a stable reading is obtained on the meter box orifice manometer. Record the critical vacuum for each orifice.

Orifices that do not reach a critical value shall not be used.

7.2.2.2.4 Obtain the barometric pressure using a barometer as described in Section 2.1.9. Record the barometric pressure, $P_{bar,}$ in mm Hg (in. Hg).

7.2.2.2.5 Conduct duplicate runs at a vacuum of 25 to 50 mm Hg (1 to 2 in. Hg) above the critical vacuum. The runs shall be at least 5 minutes each. The DGM volume readings shall be in increments of 0.00283 m^3 (0.1 ft^3) or in increments of complete revolutions of the DGM. As a guideline, the times should not differ by more than 3.0 seconds (this includes allowance for changes in the DGM temperatures) to achieve ± 0.5 percent in K′. Record the information listed in Figure 5–11.

7.2.2.2.6 Calculate K′ using Equation 5–9.

$$K' = \frac{K_1 V_m Y\left(P_{bar} + \Delta H / 13.6\right)\sqrt{T_{amb}}}{P_{bar}\ T_m \theta} \qquad \text{Eq. 5-9}$$

Where:

$$K' = \text{Critical orifice coefficient}, \frac{\left(m^3\right)\left(^oK\right)^{\frac{1}{2}}}{\left(mm.\ Hg\right)\left(min\right)}\left[\frac{\left(ft^3\right)\left(^oR\right)^{\frac{1}{2}}}{\left(in.Hg\right)\left(min\right)}\right]$$

T_{amb}=Absolute ambient temperature, °K (°R).

Average the K′ values. The individual K′ values should not differ by more than ±0.5 percent from the average.

7.2.3 Using the Critical Orifices as Calibration Standards.

7.2.3.1 Record the barometric pressure.

Date Train ID DGM cal. factor Critical orifice ID

Dry gas meter		Run number	
		1	2
Final reading	m^3 (ft^3)		
Initial reading	m^3 (ft^3)		
Difference, V_m	m^3 (ft^3)		
Inlet/Outlet temperatures:			
Initial	°C (°F)	/	/
Final	°C (°F)	/	/
Avg. Temperature, t_m.	°C (°F)		
Time, Θ	min/sec	/	/

Dry gas meter		Run number	
		1	2
	min		
Orifice man. rdg., Δ H	mm (in.) H_2O		
Bar. pressure, P_{bar}	mm (in.) Hg		
Ambient temperature, t_{amb}.	°C (°F)		
Pump vacuum	mm (in.) Hg		
K′ factor			
Average			

Figure 5–11. Data sheet for determining K′ factor.

7.2.3.2 Calibrate the metering system according to the procedure outlined in Sections 7.2.2.2.1 to 7.2.2.2.5. Record the information listed in Figure 5.12.

7.2.3.3 Calculate the standard volumes of air passed through the DGM and the critical orifices, and calculate the DGM calibration factor, Y, using the equations below:

$$V_m(std) = K_1 V_m \frac{P_{bar} + (\Delta H / 13.6)}{T_m} \qquad \text{Eq. 5-10}$$

$$V_{cr}(std) = K' \frac{P_{bar}\theta}{T_{amb}} \qquad \text{Eq. 5-11}$$

$$Y = \frac{V_{cr(std)}}{V_{m(std)}} \qquad \text{Eq. 5-12}$$

where:

$V_{cr(std)}$=Volume of gas sample passed through the critical orifice, corrected to standard conditions, dsm^3 (dscf).

K_1=0.3858 °K/mm Hg for metric units
=17.64 °R/in. Hg for English units.

7.2.3.4 Average the DGM calibration values for each of the flow rates. The calibration factor, Y, at each of the flow rates should not differ by more than ±2 percent from the average.

7.2.3.5 To determine the need for recalibrating the critical orifices, compare the DGM Y factors obtained from two adjacent orifices each time a DGM is calibrated; for example, when checking 13/2.5, use orifices 12/10.2 and 13/5.1. If any critical orifice yields a DGM Y factor differing by more than 2 percent from the others, recalibrate the critical orifice according to Section 7.2.2.2.

Date Train ID Critical orifice ID Critical orifice K′ factor

Dry gas meter		Run number	
		1	2
Final reading	m^3 (ft^3)		
Initial reading	m^3 (ft^3)		
Difference, V_m	m^3 (ft^3)		
Inlet/outlet temperatures:			
Initial	°C (°F)	/	/
Final	°C (°F)	/	/
Avg. Temperature, t_m	°C (°F)		
Time, Θ	min/sec	/	/
	min		
Orifice man. rdg., Δ H	mm (in.) H_2O.		
Bar. pressure, P_{bar}	mm (in.) Hg		
Ambient temperature, t_{amb}	°C (°F)		
Pump vacuum	mm (in.) Hg		
$V_{m(std)}$	m^3 (ft^3)		
$V_{cr(std)}$	m^3 (ft^3)		
DGM cal. factor, Y			

Figure 5–12. Data sheet for determining DGM Y factor.

8. *Bibliography*

1. Addendum to Specifications for Incinerator Testing at Federal Facilities. PHS, NCAPC. Dec. 6, 1967.

2. Martin, Robert M. Construction Details of Isokinetic Source-Sampling Equipment. Environmental Protection Agency. Research Triangle Park, NC. APTD–0581. April 1971.

3. Rom, Jerome J. Maintenance, Calibration, and Operation of Isokinetic Source Sampling Equipment. Environmental Protection Agency. Research Triangle Park, NC. APTD–0576. March, 1972.

4. Smith, W. S., R. T. Shigehara, and W. F. Todd. A Method of Interpreting Stack Sampling Data. Paper Presented at the 63d Annual Meeting of the Air Pollution Control Association, St. Louis, MO, June 14–19, 1970.

5. Smith, W. S., et al. Stack Gas Sampling Improved and Simplified With New Equipment. APCA Paper No. 67–119. 1967.

6. Specifications for Incinerator Testing at Federal Facilities. PHS, NCAPC. 1967.

7. Shigehara, R. T. Adjustments in the EPA Nomograph for Different Pitot Tube Coefficients and Dry Molecular Weights. Stack Sampling News *2*:4–11, October, 1974.

8. Vollaro, R. F. A Survey of Commercially Available Instrumentation For the Measurement of Low-Range Gas Velocities. U.S. Environmental Protection Agency, Emission Measurement Branch. Research Triangle Park, NC. November, 1976 (unpublished paper).

9. Annual Book of ASTM Standards. Part 26. Gaseous Fuels; Coal and Coke; Atmospheric Analysis. American Society for Testing and Materials. Philadelphia, PA. 1974. pp. 617–622.

10. Felix, L. G., G. I. Clinard, G. E. Lacey, and J. D. McCain. Inertial Cascade Impactor Substrate Media for Flue Gas Sampling. U.S. Environmental Protection Agency. Research Triangle Park, NC 27711, Publication No. EPA–600/7–77–060. June 1977. 83 p.

11. Westlin, P. R. and R. T. Shigehara. Procedure for Calibrating and Using Dry Gas Volume Meters as Calibration Standards. Source Evaluation Society Newsletter. *3*(1):17–30. February 1978.

12. Lodge, J.P., Jr., J.B. Pate, B.E. Ammons, and G.A. Swanson. The Use of Hypodermic Needles as Critical Orifices in Air Sampling. J. Air Pollution Control Association. *16:*197–200. 1966.

METHOD 5A—DETERMINATION OF PARTICULATE EMISSIONS FROM THE ASPHALT PROCESSING AND ASPHALT ROOFING INDUSTRY

1. *Applicability and Principle*

1.1 Applicability. This method applies to the determination of particulate emissions from asphalt roofing industry process saturators, blowing stills, and other sources as specified in the regulations.

1.2 Principle. Particulate matter is withdrawn isokinetically from the source and collected on a glass filter fiber maintained at a temperature of 42°±10 °C (108°±18 °F). The particulate mass, which includes any material that condenses at or above the filtration temperature, is determined gravimetrically after removal of uncombined water.

2. *Apparatus*

2.1 Sampling Train. The sampling train configuration is the same as shown in Figure 5–1 of Method 5. The sampling train consists of the following components:

2.1.1 Probe Nozzle, Pitot Tube, Differential Pressure Gauge, Filter Holder, Condenser, Metering System, Barometer, and Gas Density Determination Equipment. Same as Method 5, Sections 2.1.1, 2.1.3 to 2.1.5, and 2.1.7 to 2.1.10, respectively.

2.1.2 Probe Liner. Same as in Method 5, Section 2.1.2, with the note that at high stack gas temperatures (greater than 250 °C (480 °F)), water-cooled probes may be required to control the probe exit temperature to 42°±10 °C (108±18 °F).

2.1.3 Precollector Cyclone. Borosilicate glass following the construction details shown in Air Pollution Technical Document–0581, ''Construction Details of Isokinetic Source-Sampling Equipment''.

NOTE: The tester shall use the cyclone when the stack gas moisture is greater than 10 percent. The tester shall not use the precollector cyclone under other, less severe conditions.

2.1.4 Filter Heating System. Any heating (or cooling) system capable of maintaining a sample gas temperature at the exit end of the filter holder during sampling at 42°±10° C (108°±18° F). Install a temperature gauge capable of measuring temperature within 3° C (5.4° F) at the exit side of the filter holder so that the sensing tip of the temperature

gauge is in direct contact with the sample gas, and the sample gas temperature can be regulated and monitored during sampling. The temperature gauge shall comply with the calibration specifications defined in Section 5. The tester may use systems other than the one shown in APTD–0581.

2.2 Sample Recovery. The equipment required for sample recovery is as follows:

2.2.1 Probe-Liner and Probe-Nozzle Brushes, Graduated Cylinder and/or Balance, Plastic Storage Containers, and Funnel and Rubber Policeman. Same as Method 5, Sections 2.2.1, 2.2.5, 2.2.6, and 2.2.7, respectively.

2.2.2 Wash Bottles. Glass.

2.2.3 Sample Storage Containers. Chemically resistant, borosilicate glass bottles, with rubber-backed Teflon screw cap liners or caps that are constructed so as to be leak-free and resistant to chemical attack by 1,1,1-trichloroethane (TCE), 500-ml or 1000-ml. (Narrow mouth glass bottles have been found to be less prone to leakage.)

2.2.4 Petri Dishes. Glass, unless otherwise specified by the Administrator.

2.2.5 Funnel. Glass.

2.3 Analysis. For analysis, the following equipment is needed:

2.3.1 Glass Weighing Dishes, Desiccator, Analytical Balance, Balance, Hygrometer, and Temperature Gauge. Same as Method 5, Sections 2.3.1 to 2.3.4, 2.3.6, and 2.3.7, respectively.

2.3.2 Beakers. Glass, 250-ml and 500-ml.

2.3.3 Separatory Funnel. 100-ml or greater.

3. *Reagents*

3.1 Sampling. The reagents used in sampling are as follows:

3.1.1. Filters, Silica Gel, and Crushed Ice. Same as Method 5, Sections 3.1.1, 3.1.2, and 3.1.4, respectively.

3.1.2 Stopcock Grease. TCE-insoluble, heat-stable grease (if needed). This is not necessary if screw-on connectors with Teflon sleeves, or similar, are used.

3.2 Sample Recovery. Reagent grade 1,1,1-trichloroethane (TCE), ≦0.001 percent residue and stored in glass bottles, is required. Run TCE blanks prior to field use and use only TCE with low blank values (≦0.001 percent). The tester shall in no case subtract a blank value of greater than 0.001 percent of the weight of TCE used from the sample weight.

3.3 Analysis. Two reagents are required for the analysis:

3.3.1 TCE. Same as 3.2.

3.3.2 Desiccant. Same as Method 5, Section 3.3.2.

4. *Procedure*

4.1 Sampling Train Operation. The complexity of this method is such that in order to obtain reliable results, testers should be trained and experienced with Method 5 test procedures.

4.1.1 Pretest Preparation. Unless otherwise specified, maintain and calibrate all components according to the procedure described in Air Pollution Technical Document-0576, ''Maintenance, Calibration, and Operation of Isokinetic Source-Sampling Equipment''.

Prepare probe liners and sampling nozzles as needed for use. Thoroughly clean each component with soap and water followed by a minimum of three TCE rinses. Use the probe and nozzle brushes during at least one of the TCE rinses (refer to Section 4.2 for rinsing techniques). Cap or seal the open ends of the probe liners and nozzles to prevent contamination during shipping.

Prepare silica gel portions and glass filters as specified in Method 5, Section 4.1.1.

4.1.2 Preliminary Determinations. Select the sampling site, probe nozzle, and probe length as specified in Method 5, Section 4.1.2.

Select a total sampling time greater than or equal to the minimum total sampling time specified in the test procedures section of the applicable regulation. Follow the guidelines outlined in Method 5, Section 4.1.2, for sampling time per point and total sample volume collected.

4.1.3 Preparation of Collection Train. Prepare the collection train as specified in Method 5, Section 4.1.3, with the addition of the following:

Set up the sampling train as shown in Figure 5–1 of Method 5 with the addition of the precollector cyclone, if used, between the probe and filter holder. The temperature of the precollector cyclone, if used, should be about the same as for the filter, i.e., 42°±10 °C (108°±18 °F). Use no stopcock grease on ground glass joints unless the grease is insoluble in TCE.

4.1.4 Leak Check Procedures. Follow the procedures given in Method 5, Sections 4.1.4.1 (Pretest Leak Check), 4.1.4.2 (Leak Check During Sample Run), and 4.1.4.3 (Post-Test Leak Check).

4.1.5 Particulate Train Operation. Operate the sampling train as described in Method 5, Section 4.1.5, except maintain the gas temperature exiting the filter at 42°±10 °C (108°±18 °F).

4.1.6 Calculation of Percent Isokinetic. Same as in Method 5, Section 4.1.6.

4.2 Sample Recovery. Using the procedures and techniques described in Method 5, Section 4.2, quantitatively recover any particulate matter into the following containers (additions and deviations to the stated procedures are as noted):

4.2.1 Container No. 1 (Filter). Same instructions as Method 5, Section 4.2, ''Container No. 1.'' If it is necessary to fold the filter, do so such that the film of oil is inside the fold.

4.2.2 Container No. 2 (Probe to Filter Holder). Taking care to see that material on the outside of the probe or other exterior

surfaces does not get into the sample, quantitatively recover particulate matter or any condensate from the probe nozzle, probe fitting, probe liner, precollector cyclone and collector flask (if used), and front half of the filter holder by washing these components with TCE and placing the wash in a glass container. Carefully measure the total amount of TCE used in the rinses. Perform the TCE rinses as described in Method 5, Section 4.2, ''Container No. 2,'' using TCE instead of acetone.

Brush and rinse the inside of the cyclone, cyclone collection flask, and the front half of the filter holder. Brush and rinse each surface three times or more, if necessary, to remove visible particulate.

4.2.3 Container No. 3 (Silica Gel). Same procedure as in Method 5, Section 4.2, ''Container No. 3.''

4.2.4 Impinger Water. Treat the impingers as follows: Make a notation of any color or film in the liquid catch. Follow the same procedure as in Method 5, Section 4.2, ''Impinger Water.''

4.2.5 Blank. Save a portion of the TCE used for cleanup as a blank. Take 200 ml of this TCE directly from the wash bottle being used and place it in a glass sample container labeled ''TCE blank.''

4.3 Analysis. Record the data required on a sheet such as the one shown in Figure 5A–1. Handle each sample container as follows:

4.3.1 Container No. 1 (Filter). Transfer the filter from the sample container to a tared glass weighing dish and desiccate for 24 hours in a desiccator containing anhydrous calcium sulfate. Rinse Container No. 1 with a measured amount of TCE and analyze this rinse with the contents of Container No. 2. Weigh the filter to a constant weight. For the purpose of Section 4.3, the term ''constant weight'' means a difference of no more than 10 percent or 2 mg (whichever is greater) between two consecutive weighings made 24 hours apart. Report the ''final weight'' to the nearest 0.1 mg as the average of these two values.

4.3.2 Container No. 2 (Probe to Filter Holder). Before adding the rinse from Container No. 1 to Container No. 2, note the level of liquid in the container and confirm on the analysis sheet whether or not leakage occurred during transport. If noticeable leakage occurred, either void the sample or take steps, subject to the approval of the Administrator, to correct the final results.

Measure the liquid in this container either volumetrically to ±1 ml or gravimetrically to ±0.5 g. Check to see if there is any appreciable quantity of condensed water present in the TCE rinse (look for a boundary layer or phase separation). If the volume of condensed water appears larger than 5 ml, separate the oil-TCE fraction from the water fraction using a separatory funnel. Measure the volume of the water phase to the nearest ml; adjust the stack gas moisture content, if necessary (see Sections 6.4 and 6.5). Next, extract the water phase with several 25-ml portions of TCE until, by visual observation, the TCE does not remove any additional organic material. Evaporate the remaining water fraction to dryness at 93 °C (200 °F), desiccate for 24 hours, and weigh to the nearest 0.1 mg.

Treat the total TCE fraction (including TCE from the filter container rinse and water phase extractions) as follows: Transfer the TCE and oil to a tared beaker and evaporate at ambient temperature and pressure. The evaporation of TCE from the solution may take several days. Do not desiccate the sample until the solution reaches an apparent constant volume or until the odor of TCE is not detected. When it appears that the TCE has evaporated, desiccate the sample and weigh it at 24-hour intervals to obtain a ''constant weight'' (as defined for Container No. 1 above). The ''total weight'' for Container No. 2 is the sum of the evaporated particulate weight of the TCE-oil and water phase fractions. Report the results to the nearest 0.1 mg.

4.3.3 Container No. 3 (Silica Gel). This step may be conducted in the field. Weigh the spent silica gel (or silica gel plus impinger) to the nearest 0.5 g using a balance.

4.3.4 ''TCE Blank'' Container. Measure TCE in this container either volumetrically or gravimetrically. Transfer the TCE to a tared 250-ml beaker and evaporate to dryness at ambient temperature and pressure. Desiccate for 24 hours and weigh to a constant weight. Report the results to the nearest 0.1 mg.

NOTE: In order to facilitate the evaporation of TCE liquid samples, these samples may be dried in a controlled temperature oven at temperatures up to 38 °C (100 °F) until the liquid is evaporated.

4.4 Quality Control Procedures. A quality control (QC) check of the volume metering system at the field site is suggested before collecting the sample. Use the procedure defined in Method 5, Section 4.4.

5. *Calibration*

Calibrate the sampling train components according to the indicated sections of Method 5: Probe Nozzle (5.1), Pitot Tube Assembly (5.2), Metering System (5.3), Probe Heater (5.4), Temperature Gauges (5.5), Leak Check of Metering System (5.6), and Barometer (5.7).

6. *Calculations*

6.1 Nomenclature. Same as in Method 5, Section 6.1, with the following additions:

C_t=TCE blank residue concentration, mg/mg.
m_t=Mass of residue of TCE after evaporation, mg.
V_{pc}=Volume of water collected in precollector, ml.
V_t=Volume of TCE blank, ml.
V_{tw}=Volume of TCE used in wash, ml.

W_t=Weight of residue in TCE wash, mg.

ρ_T=Density of TCE, mg/ml (see label on bottle).

6.2 Dry Gas Meter Temperature and Orifice Pressure Drop. Using the data obtained in this test, calculate the average dry gas meter temperature and average orifice pressure drop (see Figure 5–2 of Method 5).

6.3 Dry Gas Volume. Using the data from this test, calculate $V_{m(std)}$ by using Equation 5–1 of Method 5. If necessary, adjust the volume for leakages.

6.4 Volume of Water Vapor.

$$V_{w(std)}=K_1(V_{lc}+V_{pc})$$

Eq. 5A–1

Where:

K_1=0.00133 m^3/ml for metric units.

=0.04707 ft^3/ml for English units.

6.5 Moisture Content.

$$B_{ws}=V_{w(std)}/[V_{m(std)}+V_{w(std)}]$$

Eq. 5A–2

NOTE: In saturated or water droplet-laden gas streams, two calculations of the moisture content of the stack gas shall be made, one from the impinger and precollector analysis (Equations 5A–1 and 5A–2) and a second from the assumption of saturated conditions. The lower of the two values of moisture content shall be considered correct. The procedure for determining the moisture content based upon assumption of saturated conditions is given in the note of Section 1.2 of Method 4. For the purpose of this method, the average stack gas temperature from Figure 5–2 of Method 5 may be used to make this determination, provided that the accuracy of the in-stack temperature sensor is within ±1 °C (2 °F).

6.6 TCE Blank Concentration.

$$C_t=m_t/V_t\rho_t$$

Eq. 5A–3

6.7 TCE Wash Blank.

$$W_t=C_t\ V_{tw}\rho_t$$

Eq. 5A–4

6.8 Total Particulate Weight. Determine the total particulate catch from the sum of the weights obtained from Containers 1, 2, and 3, less the TCE blank.

6.9 Particulate Concentration.

$$c_s=K_2m_n/V_{m(std)}$$

Eq. 5A–5

Where:

K_2=0.001 g/mg.

6.10 Isokinetic Variation and Acceptable Results. Same as in Method 5, Sections 6.11 and 6.12, respectively.

7. *Bibliography*

The bibliography for Method 5A is the same as that for Method 5.

METHOD 5B—DETERMINATION OF NONSULFURIC ACID PARTICULATE MATTER FROM STATIONARY SOURCES

1. *Applicability and Principle.*

1.1 Applicability. This method is to be used for determining nonsulfuric acid particulate matter from stationary sources. Use of this method must be specified by an applicable subpart, or approved by the Administrator, U.S. Environmental Protection Agency, for a particular application.

1.2 Principle. Particulate matter is withdrawn isokinetically from the source using the Method 5 train at 160°C (320°F). The collected sample is then heated in the oven at 160°C (320°F) for 6 hours to volatilize any condensed sulfuric acid that may have been collected, and the nonsulfuric acid particulate mass is determined gravimetrically.

2. *Procedure.*

The procedure is identical to EPA Method 5 except for the following:

2.1 Initial Filter Tare. Oven dry the filter at 160±5°C (320 ±10°F) for 2 to 3 hours, cool in a desiccator for 2 hours, and weigh. Desiccate to constant weight to obtain the initial tare. Use the applicable specifications and techniques of Section 4.1.1 of Method 5 for this determination.

2.2 Probe and Filter Temperatures. Maintain the probe outlet and filter temperatures at 160±14°C (320±25°F).

2.3 Analysis. Dry the probe sample at ambient temperature. Then oven-dry the probe and filter samples at a temperature of 160±5°C (320±10°F) for 6 hours. Cool in a desiccator for 2 hours, and weigh to constant weight. Use the applicable specifications and techniques of Section 4.3 of Method 5 for this determination.

METHOD 5C—[RESERVED]

METHOD 5D—DETERMINATION OF PARTICULATE MATTER EMISSIONS FROM POSITIVE PRESSURE FABRIC FILTERS

1. *Applicability and Principle*

1.1 Applicability. This method applies to the determination of particulate matter emissions from positive pressure fabric filters. Emissions are determined in terms of concentration (mg/m^3) and emission rate (kg/h).

The General Provisions of 40 CFR Part 60, §60.8(e), require that the owner or operator of an affected facility shall provide performance testing facilities. Such performance testing facilities include sampling ports, safe sampling platforms, safe access to sampling sites, and utilities for testing. It is intended that affected facilities also provide sampling locations that meet the specification for adequate stack length and minimal flow disturbances as described in Method 1. Provisions for testing are often overlooked factors in designing fabric filters or are extremely

costly. The purpose of this procedure is to identify appropriate alternative locations and procedures for sampling the emissions from positive pressure fabric filters. The requirements that the affected facility owner or operator provide adequate access to performance testing facilities remain in effect.

1.2 Principle. Particulate matter is withdrawn isokinetically from the source and collected on a glass fiber filter maintained at a temperature at or above the exhaust gas temperature up to a nominal 120°C (120±14°C or 248±25°F). The particulate mass, which includes any material that condenses at or above the filtration temperature, is determined gravimetrically after removal of uncombined water.

2. *Apparatus*

The equipment requirements for the sampling train, sample recovery, and analysis are the same as specified in Sections 2.1, 2.2, and 2.3, respectively, of Method 5 or Method 17.

3. *Reagents*

The reagents used in sampling, sample recovery, and analysis are the same as specified in Sections 3.1, 3.2, and 3.3, respectively, of Method 5 or Method 17.

4. *Procedure*

4.1 Determination of Measurement Site. The configurations of positive pressure fabric filter structures frequently are not amenable to emission testing according to the requirements of Method 1. Following are several alternatives for determining measurement sites for positive pressure fabric filters.

4.1.1 Stacks Meeting Method 1 Criteria. Use a measurement site as specified in Method 1, Section 2.1.

4.1.2 Short Stacks Not Meeting Method 1 Criteria. Use stack extensions and the procedures in Method 1. Alternatively, use flow straightening vanes of the ''egg-crate'' type (see Figure 5D–1). Locate the measurement site downstream of the straightening vanes at a distance equal to or greater than two times the average equivalent diameter of the vane openings and at least one-half of the overall stack diameter upstream of the stack outlet.

4.1.3 Roof Monitor or Monovent. (See Figure 5D–2.) For a positive pressure fabric filter equipped with a peaked roof monitor, ridge vent, or other type of monovent, use a measurement site at the base of the monovent. Examples of such locations are shown in Figure 5D–2. The measurement site must be upstream of any exhaust point (e.g., louvered vent).

4.1.4 Compartment Housing. Sample immediately downstream of the filter bags directly above the tops of the bags as shown in the examples in Figure 5D–2. Depending on the housing design, use sampling ports in the housing walls or locate the sampling equipment within the compartment housing.

4.2 Determination of Number and Location of Traverse Points. Locate the traverse points according to Method 1, Section 2.3. Because a performance test consists of at least three test runs and because of the varied configurations of positive pressure fabric filters, there are several schemes by which the number of traverse points can be determined and the three test runs can be conducted.

4.2.1 Single Stacks Meeting Method 1 Criteria. Select the number of traverse points according to Method 1. Sample all traverse points for each test run.

4.2.2 Other Single Measurement Sites. For a roof monitor or monovent, single compartment housing, or other stack not meeting Method 1 criteria, use at least 24 traverse points. For example, for a rectangular measurement site, such as a monovent, use a balanced 5 x 5 traverse point matrix. Sample all traverse points for each test run.

4.2.3 Multiple Measurement Sites. Sampling from two or more stacks or measurement sites may be combined for a test run, provided the following guidelines are met:

(a) All measurement sites up to 12 must be sampled. For more than 12 measurement sites, conduct sampling on at least 12 sites or 50 percent of the sites, whichever is greater. The measurement sites sampled should be evenly, or nearly evenly, distributed among the available sites; if not, all sites are to be sampled.

(b) The same number of measurement sites must be sampled for each test run.

(c) The minimum number of traverse points per test run is 24. An exception to the 24-point minimum would be a test combining the sampling from two stacks meeting Method 1 criteria for acceptable stack length, and Method 1 specifies fewer than 12 points per site.

(d) As long as the 24 traverse points per test run criterion is met, the number of traverse points per measurement site may be reduced to eight.

Alternatively, conduct a test run for each measurement site individually using the criteria in Section 4.2.1 or 4.2.2 for number of traverse points. Each test run shall count toward the total of three required for a performance test. If more than three measurement sites are sampled, the number of traverse points per measurement site may be reduced to eight as long as at least 72 traverse points are sampled for all the tests.

The following examples demonstrate the procedures for sampling multiple measurement sites.

Example 1: A source with nine circular measurement sites of equal areas may be tested as follows: For each test run, traverse three measurement sites using four points per diameter (eight points per measurement site). In this manner, test run number 1 will include sampling from sites 1, 2, and 3; run 2

will include samples from sites 4, 5, and 6; and run 3 will include sites 7, 8, and 9. Each test area may consist of a separate test of each measurement site using eight points. Use the results from all nine tests in determining the emission average.

Example 2: A source with 30 rectangular measurement sites of equal areas may be tested as follows: For each of three test runs, traverse five measurement sites using a 3 x 3 matrix of traverse points for each site. In order to distribute the sampling evenly over all the available measurement sites while sampling only 50 percent of the sites, number the sites consecutively from 1 to 30 and sample all the even numbered (or odd numbered) sites. Alternatively, conduct a separate test of each of 15 measurement sites using Section 4.2.1 or 4.2.2 to determine the number and location of traverse points, as appropriate.

Example 3: A source with two measurement sites of equal areas may be tested as follows: For each test of three test runs, traverse both measurement sites using Section 4.2.3 in determining number of traverse points. Alternatively, conduct two full emission test runs of each measurement site using the criteria in Section 4.2.1 or 4.2.2 to determine the number of traverse points.

Other test schemes, such as random determination of traverse points for a large number of measurement sites, may be used with prior approval from the Administrator.

4.3 Velocity Determination. The velocities of exhaust gases from postitive pressure baghouses are often too low to measure accurately with the type S pitot specified in Method 2 [i.e., velocity head <1.3 mm H_2O (0.05 in. H_2O)]. For these conditions, measure the gas flow rate at the fabric filter inlet following the procedures in Method 2. Calculate the average gas velocity at the measurement site as follows:

$$\bar{v} = \frac{Q_i}{A_o} \bullet \frac{T_o}{T_i} \qquad \text{Eq. 5D-1}$$

Where:

v=Average gas velocity at the measurement site(s), m/s (ft/s).

Q_i=Inlet gas volume flow rate, m^3/s (ft^3/s).

A_o=Measurement site(s) total cross-sectional area, m^2 (ft^2).

T_o=Temperature of gas at measurement site, °K (°R)

T_i=Temperature of gas at inlet, °K (°R).

Use the average velocity calculated for the measurement site in determining and maintaining isokinetic sampling rates. Note: All sources of gas leakage, into or out of the fabric filter housing between the inlet measurement site and the outlet measurement site must be blocked and made leak-tight.

Velocity determinations at measurement sites with gas velocities within the range measurable with the type S pitot [i.e., velocity head >1.3 mm H_2O (0.05 in. H_2O)] shall be conducted according to the procedures in Method 2.

4.4 Sampling. Follow the procedures specified in Section 4.1 of Method 5 or Method 17 with the exceptions as noted above.

4.5 Sample Recovery. Follow the procedures specified in Section 4.2 of Method 5 or Method 17.

4.6 Sample Analysis. Follow the procedures specified in Section 4.3 of Method 5 or Method 17.

4.7 Quality Control Procedures. A QC check of the volume metering system at the field site is suggested before collecting the sample. Use the procedure defined in Section 4.4 of Method 5.

5. *Calibration*

Follow the procedures as specified in Section 5 of Method 5 or Method 17.

6. *Calculations*

Follow the procedures as specified in Section 6 of Method 5 or Method 17 with the exceptions as follows:

6.1 Total volume flow rate may be determined using inlet velocity measurements and stack dimensions.

6.2 Average Particulate Concentration. For multiple measurement sites, calculate the average particulate concentration as follows:

$$\bar{C} = \frac{\sum_{i=1}^{n} m_i}{\sum_{i=1}^{n} Vol_i} \qquad \text{Eq. 5D-2}$$

Where:

m_i=The mass collected for run i of n, mg(gr).

Vol_i=The sample volume collected for run i of n, sm^3 (scf).

C=Average concentration of particulate for all n runs, mg/sm^3 (gr/scf).

7. *Bibliography*

The bibliography is the same as for Method 5.

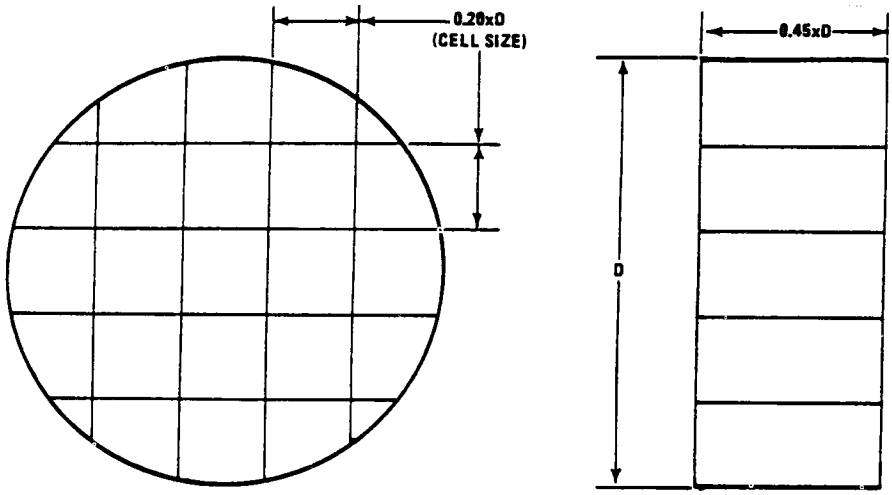

NOTE: POSITION STRAIGHTENERS SO THAT CELL SIDES ARE LOCATED APPROX. 45° FROM TRAVERSE DIA's.

Figure 5D-1. Example of flow straightening vanes.

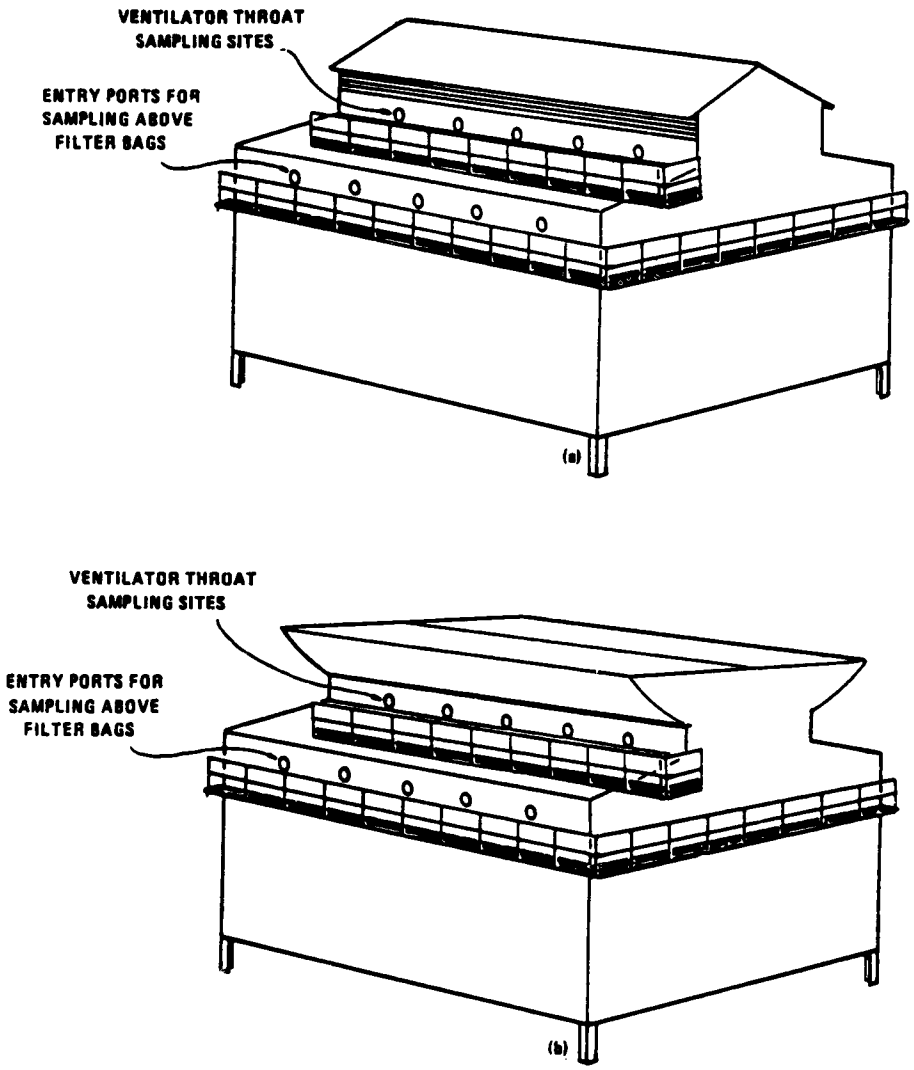

Figure 5D-2. Acceptable sampling site locations for: (a) peaked roof; and (b) ridge vent type fabric filters.

METHOD 5E—DETERMINATION OF PARTICULATE EMISSIONS FROM THE WOOL FIBERGLASS INSULATION MANUFACTURING INDUSTRY

1. *Applicability and Principle*

1.1 Applicability. This method is applicable for the determination of particulate emissions from wool fiberglass insulation manufacturing sources.

1.2 Principle. Particulate matter is withdrawn isokinetically from the source and collected on a glass fiber filter maintained at a temperature in the range of 120 °±14 °C (248 °±25 °F) and in solutions of 0.1 *N* NaOH. The filtered particulate mass, which includes any

material that condenses at or above the filtration temperature, is determined gravimetrically after removal of uncombined water. The condensed particulate material collected in the impinger solutions is determined as total organic carbon (TOC) using a nondispersive infrared type of analyzer. The sum of the filtered particulate mass and the condensed particulate matter is reported as the total particulate mass.

2. *Apparatus*

2.1 Sampling Train. The equipment list for the sampling train is the same as described in Section 2.1 of Method 5 except as follows:

2.1.1 Probe Liner. Same as described in Section 2.1.2 of Method 5 except use only borosilicate or quartz glass liners.

2.1.2 Filter Holder. Same as described in Section 2.1.5 of Method 5 with the addition of a leak-tight connection in the rear half of the filter holder designed for insertion of a thermocouple or other temperature gauge for measuring the sample gas exist temperature.

2.2 Sample Recovery. The equipment list for sample recovery is the same as described in Section 2.2 of Method 5 except three wash bottles are needed instead of two and only glass storage bottles and funnels may be used.

2.3 Analysis. The equipment list for analysis is the same as Section 2.3 of Method 5 with the additional equipment for TOC analysis as described below:

2.3.1 Sample Blender or Homogenizer. Waring type of ultrasonic.

2.3.2 Magnetic Stirrer.

2.3.3 Hypodermic Syringe. 0- to 100-µl capacity.

2.3.4 Total Organic Carbon Analyzer. Beckman Model 915 with 215 B infrared analyzer or equivalent and a recorder.

2.3.5 Beaker. 30 ml.

2.3.6 Water Bath. Temperature-controlled.

2.3.7 Volumetric Flasks. 1,000 ml and 500 ml.

3. *Reagents*

3.1 Sampling. The reagents used in sampling are the same as used in Reference Method 5 with the addition of 0.1 *N* NaOH (dissolve 40 g of ACS reagent grade NaOH in distilled water and dilute to 1 liter).

3.2 Sample Recovery. The reagents used in sample recovery are the same as used in Method 5 with the addition of distilled water and 0.1 *N* NaOH as described in Section 3.1.

3.3 Analysis. The reagents used in analysis are the same as in Method 5 except as follows:

3.3.1 Carbon Dioxide-Free Water. Distilled or deionized water that has been freshly boiled for 15 minutes and cooled to room temperature while preventing exposure to ambient air with a cover vented with an ascarite tube.

3.3.2 Hydrochloric Acid. HCl, concentrated, with a dropper.

3.3.3 Organic Carbon Stock Solution. Dissolve 2.1254 g of dried potassium biphthalate in CO_2-free water and dilute to 1 liter in a volumetric flask. This solution contains 1,000 mg/l organic carbon.

3.3.4 Inorganic Carbon Stock Solution. Dissolve 4.404 g anhydrous sodium carbonate in about 500 ml of CO_2-free water in a 1 liter volumetric flask. Add 3.497 g anhydrous sodium bicarbonate to the flask and dilute to 1 liter with CO_2-free water. This solution contains 1,000 mg/l inorganic carbon.

3.3.5 Oxygen Gas. CO_2-free.

4. *Procedure*

4.1 Sampling. The sampling procedures are the same as in Section 4.1 of Method 5 except as follows:

4.1.1 Filtration Temperature. The temperature of the filtered gas stream, rather than the filter compartment air temperature, is maintained at 120°±14°C (248°±25°F).

4.1.2 Impinger Solutions. 0.1 *N* NaOH is used in place of water in the impingers. The volumes of the solutions are the same as in Method 5.

4.2 Sample Recovery. The sample recovery procedure is as follows:

Water is used to rinse and clean the probe parts prior to the acetone rinse. Save portions of the water, acetone, and 0.1 *N* NaOH used for cleanup as blanks following the procedure as in Section 4.2 of Method 5.

NOTE: All parts of the sample collection portion of the train (e.g., probe and nozzle, filter holder, impinger glassware) must be free of organic solvent residue before sample collection. It is necessary that all sampling apparatus that have been rinsed with acetone be flushed twice with water or dilute NaOH before the sample run. The rinse solutions from this cleaning process should be discarded. If other solvents that are not readily soluble in water (e.g., TCE) are used, place the exposed sampling apparatus in a drying oven at 105°C for at least 30 minutes.

Container No. 1. The filter is removed and stored in the same manner as in Section 4.2 of Method 5.

Container No. 2. Use water to rinse the sample nozzle, probe, and front half of the filter holder three times in the manner described in Section 4.2 of Method 5 except that no brushing is done. Put all the wash water in one container, seal, and label.

Container No. 3. Rinse and brush the sample nozzle, probe, and front half of the filter holder with acetone as described for Container No. 2 in Section 4.2 of Method 5.

Container No. 4. Place the contents of the silica gel impinger in its original container as described for Container No. 3 in Section 4.2 of Method 5.

Container No. 5. Measure the liquid in the first three impingers and record the volume

or weight as described for the Impinger Water in Section 4.2 of Method 5. Do not discard this liquid, but place it in a sample container using a glass funnel to aid in the transfer from the impingers or graduated cylinder (if used) to the sample container. Rinse each impinger thoroughly with 0.1 *N* NaOH three times, as well as the graduated cylinder (if used) and the funnel, and put these rinsings in the same sample container. Seal the container and label to identify its contents clearly.

4.3 Analysis. The procedures for analysis are the same as in Section 4.3 of Method 5 with exceptions noted as follows:

Container No. 1. Determination of weight gain on the filter is the same as described for Container No. 1 in Section 4.3 of Method 5 except that the filters must be dried at 20°±6°C (68°F±10°F) and at ambient pressure.

Containers Nos. 2 and 3. Analyze the contents of Containers Nos. 2 and 3 as described for Container No. 2 in Section 4.3 of Method 5 except that evaporation of the samples must be at 20°±6°C (68°±10°F) and at ambient pressure.

Container No. 4. Weigh the spent silica gel as described for Container No. 3 in Section 4.3 of Method 5.

''Water and Acetone Blank'' Containers. Determine the water and acetone blank values following the procedures for Acetone Blank Container in Section 4.3 of Method 5. Evaporate the samples at ambient temperature [20°±6°C (68°±10° F)] and pressure.

Container No. 5. For the determination of total organic carbon, perform two analyses on successive identical samples, i.e., total carbon and inorganic carbon. The desired quantity is the difference between the two values obtained. Both analyses are based on conversion of sample carbon into carbon dioxide for measurement by a nondispersive infrared analyzer. Results of analyses register as peaks on a strip chart recorder.

The principal differences between operating parameters for the two channels involve the combustion tube packing material and temperature. In the total carbon channel, a high temperature [950°C (1740°F)] furnace heats a Hastelloy combustion tube packed with cobalt oxide-impregnated asbestos fiber. The oxygen in the carrier gas, the elevated temperature, and catalytic effect of the packing result in oxidation of both organic and inorganic carbonaceous material to CO_2 and steam. In the inorganic carbon channel, a low temperature [150°C (300°F)] furnace heats a glass tube containing quartz chips wetted with 85 percent phosphoric acid. The acid liberates CO_2 and steam from inorganic carbonates. The operating temperature is below that required to oxidize organic matter. Follow the manufacturer's instructions for assembly, testing, calibration, and operation of the analyzer.

As samples collected in 0.1 *N* NaOH often contain a high measure of inorganic carbon that inhibits repeatable determinations of TOC, sample pretreatment is necessary. Measure and record the liquid volume of each sample. If the sample contains solids or an immiscible liquid, homogenize the sample with a blender or ultrasonics until satisfactory repeatability is obtained. Transfer a representative portion of 10 to 15 ml to a 30-ml beaker, acidify with about 2 drops of concentrated HCl to a pH of 2 or less. Warm the acidified sample at 50°C (120°F) in a water bath for 15 minutes. While stirring the sample with a magnetic stirrer, withdraw a 20- to 50-μl sample from the beaker and inject it into the total carbon port of the analyzer. Measure the peak height. Repeat the injections until three consecutive peaks are obtained within ±10 percent of the average.

Repeat the analyses for all the samples and the 0.1 *N* NaOH blank. Prepare standard curves for total carbon and for inorganic carbon of 10, 20, 30, 40, 50, 60, 80, and 100 mg/l by diluting with CO_2-free water 10, 20, 30, 40, and 50 ml of the two stock solutions to 1,000 ml and 30, 40, and 50 ml of the two stock solutions to 500 ml. Inject samples of these solutions into the analyzer and record the peak heights as described above. The acidification and warming steps are not necessary for preparation of the standard curve.

Ascertain the sample concentrations for the samples from the corrected peak heights for the samples by reference to the appropriate standard curve. Calculate the corrected peak height for the standards and the samples by deducting the blank correction as follows:

$$\text{Corrected peak height} = A - B \qquad \text{Eq. 5E–1}$$

Where:

A = Peak height of standard or sample, mm or other appropriate unit.

B = Peak height of blank, mm or other appropriate unit.

If samples must be diluted for analysis, apply an appropriate dilution factor.

5. *Calibration*

Calibration of sampling and analysis equipment is the same as in Section 5 of Method 5 with the addition of the calibration of the TOC analyzer described in Section 4.3 of this method.

6. *Calculations*

The calculations and nomenclature for the calculations are the same as described in Section 6 of Method 5 with the addition of the following:

6.1 Mass of Condensed Particulate Material Collected.

$$M_c = 0.001\, C_{toc}\, V_s \qquad \text{Eq. 5E–2}$$

Where:

0.001=Liters per milliliter.

m_c=Mass of condensed particulate material collected in the impingers measured as TOC, mg.

C_{toc}=Concentration of TOC in the liquid sample from TOC analysis in Section 4.3, mg/l.

V_s=Total volume of liquid sample, ml.

6.2 Concentration of Condensed Particulate Material.

$$C_c = 0.001\left[m_c / V_{m(std)}\right] \quad \text{Eq. 5E-3}$$

Where:

0.001=Grams per milligram.

C_c=Concentration of condensed particulate matter in stack gas, dry basis, corrected to standard condition, g/dscm.

$V_{m(std)}$=Volume of gas sample measured by the dry gas meter, corrected to standard conditions, dscm, from Section 6.3 of Method 5.

6.3 Total Particulate Concentration.

$$C_t = C_s + C_c \quad \text{Eq. 5E-4}$$

Where:

C_t=Total particulate concentration, dry basis, corrected to standard conditions, g/dscm.

C_s=Concentration of filtered particulate matter in stack gas, dry basis, corrected to standard conditions, g/dscm, from Equation 5–6 of Method 5.

7. *Bibliography*

The bibliography is the same as in Method 5 with the addition of the following:

1. American Public Health Association, American Water Works Association, Water Pollution Control Federation. Standard Methods for the Examination of Water and Wastewater. Fifteenth Edition. Washington, DC 1980.

METHOD 5F—DETERMINATION OF NONSULFATE PARTICULATE MATTER FROM STATIONARY SOURCES

1. *Applicability and Principle.*

1.1 Applicability. This method is to be used for determining nonsulfate particulate matter from stationary sources. Use of this method must be specified by an applicable subpart of the standards, or approved by the Administrator, U.S. Environmental Protection Agency, for a particular application.

1.2 Principle. Particulate matter is withdrawn isokinetically from the source using the Method 5 train at 160°C (320°F). The collected sample is then extracted with water. A portion of the extract is analyzed for sulfate content. The remainder is neutralized with ammonium hydroxide before it is dried and weighed.

2. *Apparatus.*

The apparatus is the same as Method 5 with the following additions.

2.1 Analysis.

2.1.1 Erlenmeyer Flasks. 125-ml, with ground glass joints.

2.1.2 Air Condenser. With ground glass joint compatible with the Erlenmeyer flasks.

2.1.3 Beakers. 250-ml.

2.1.4 Volumetric Flasks. 1-liter, 500-ml (one for each sample), 200-ml, and 50-ml (one for each sample and standard).

2.1.5 Pipets. 5-ml (one for each sample and standard).

2.1.6 Ion Chromatograph. The ion chromatograph should have at least the following components.

2.1.6.1 Columns. An anion separation or other column capable of resolving the sulfate ion from other species present and a standard anion suppressor column. Suppressor columns are produced as proprietary items; however, one can be produced in the laboratory using the resin available from BioRad Company, 32nd and Griffin Streets, Richmond, California. Other systems which do not use suppressor columns may also be used.

2.1.6.2 Pump. Capable of maintaining a steady flow as required by the system.

2.1.6.3 Flow Gauges. Capable of measuring the specified system flow rate.

2.1.6.4 Conductivity Detector.

2.1.6.5 Recorder. Compatible with the output voltage range of the detector.

3. *Reagents.*

The reagents are the same as for Method 5 with the following exceptions:

3.1 Sample Recovery. Water, deionized distilled to conform to American Society for Testing and Materials Specification D1193–74, Type 3, is needed. At the option of the analyst, the $KMnO_4$ test for oxidizable organic matter may be omitted when high concentrations of organic matter are not expected to be present.

3.2 Analysis. The following are required:

3.2.1 Water. Same as in Section 3.1.

3.2.2 Stock Standard Solution, 1 mg $(NH_4)_2SO_4$/ml. Dry an adequate amount of primary standard grade ammonium sulfate at 105° to 110 °C for a minimum of 2 hours before preparing the standard solution. Then dissolve exactly 1.000 g of dried $(NH_4)_2SO_4$ in water in a 1-liter volumetric flask, and dilute to 1 liter. Mix well.

3.2.3 Working Standard Solution, 25 µg $(NH_4)_2SO_4$/ml. Pipet 5 ml of the stock standard solution into a 200-ml volumetric flask. Dilute to 200 ml with water.

3.2.4 Eluent Solution. Weigh 1.018 g of sodium carbonate (Na_2CO_3) and 1.008 g of sodium bicarbonate ($NaHCO_3$), and dissolve in 4 liters of water. This solution is 0.0024 M Na_2CO_3/0.003 M $NaHCO_3$. Other eluents appropriate to the column type and capable of resolving sulfate ion from other species present may be used.

3.2.5 Ammonium Hydroxide. Concentrated, 14.8 M.

3.2.6 Phenolphthalein Indicator. 3,3-Bis(4-hydroxyphenyl)-1-(3H)-isobenzofuranone. Dissolve 0.05 g in 50 ml of ethanol and 50 ml of water.

4. *Procedure.*

4.1 Sampling. The sampling procedure is the same as Method 5, Section 4.1, except that the probe outlet and filter temperatures shall be maintained at 160°±14 °C (320°±25 °F).

4.2 Sample Recovery. The sample recovery procedure is the same as Method 5, Section 4.2, except that the recovery solvent shall be water instead of acetone.

4.3 Analysis.

4.3.1 Sample Extraction. Cut the filter into small pieces, and place it in a 125-ml Erlenmeyer flask with a ground glass joint equipped with an air condenser. Rinse the shipping container with water, and pour the rinse into the flask. Add additional water to the flask until it contains about 75 ml, and place the flask on a hot plate. Gently reflux the contents for 6 to 8 hours. Cool the solution, and transfer it to a 500-ml volumetric flask. Rinse the Erlenmeyer flask with water, and transfer the rinsings to the volumetric flask including the pieces of filter.

Transfer the probe rinse to the same 500-ml volumetric flask with the filter sample. Rinse the sample bottle with water, and add the rinsings to the volumetric flask. Dilute the sample to exactly 500 ml with water.

4.3.2 Sulfate (SO_4) Analysis. Allow the sample to settle until all solid material is at the bottom of the volumetric flask. If necessary, centrifuge a portion of the sample. Pipet 5 ml of the sample into a 50-ml volumetric flask, and dilute to 50 ml with water. Prepare a standard calibration curve according to Section 5.1. Analyze the set of standards followed by the set of samples using the same injection volume for both standards and samples. Repeat this analysis sequence followed by a final analysis of the standard set. Average the results. The two sample values must agree within 5 percent of their mean for the analysis to be valid. Perform this duplicate analysis sequence on the same day. Dilute any sample and the blank with equal volumes of water if the concentration exceeds that of the highest standard.

Document each sample chromatogram by listing the following analytical parameters: Injection point, injection volume, sulfate retention time, flow rate, detector sensitivity setting, and recorder chart speed.

4.3.3 Sample Residue. Transfer the remaining contents of the volumetric flask to a tared 250-ml beaker. Rinse the volumetric flask, and add the rinsings to the tared beaker. Make certain that all particulate matter is transferred to the beaker. Evaporate the water in an oven heated to 105 °C until only about 100 ml of water remains. Remove the beakers from the oven, and allow them to cool.

After the beakers have cooled, add five drops of phenolphthalein indicator, and then add concentrated ammonium hydroxide until the solution turns pink. Return the samples to the oven at 105 °C, and evaporate the samples to dryness. Cool the samples in a desiccator, and weigh the samples to constant weight.

4.4 Blanks.

4.4.1 Filter Blank. Choose a clean filter from the same lot as those used in the testing. Treat the blank filter as a sample, and analyze according to Sections 4.3.1 and 4.3.2.

4.4.2 Water. Transfer a measured volume of water between 100 and 200 ml into a tared 250-ml beaker. Treat the blank as a sample, and analyze according to Section 4.3.3.

5. *Calibration.*

The calibration procedure is the same as Method 5, Section 5, with the following additions:

5.1 Standard Calibration Curve. Prepare a series of five standards by adding 1.0, 2.0, 4.0, 6.0, and 10.0 ml of working standard solution (25 µg/ml) to a series of five 50-ml volumetric flasks. (The standard masses will equal 25, 50, 100, 150, and 250 µg.) Dilute each flask to volume with water, and mix well. Analyze with the samples as described in Section 4.3. Prepare or calculate a linear regression plot of the standard masses in µg (x-axis) versus their responses (y-axis). (Take peak height measurements with symmetrical peaks; in all other cases, calculate peak areas.) From this line, or equation, determine the slope, and calculate its reciprocal which is the calibration factor, S. If any point deviates from the line by more than 7 percent of the concentration at that point, remake and reanalyze that standard. This deviation can be determined by multiplying S times the response for each standard. The resultant concentrations must not differ by more than 7 percent from each known standard mass (i.e., 25, 50, 100, 150, and 250 µg).

5.2 Conductivity Detector. Calibrate according to manufacturer's specifications prior to initial use.

6. *Calculations.*

Calculations are the same as Method 5, Section 6, with the following additions:

6.1 Nomenclature.

C_w=Water blank residue concentration, mg/ml.

F=Dilution factor (required only if sample dilution was needed to reduce the concentration into the range of calibration).

H_s=Sample response, mm for height or mm^2 for area.

H_b=Filter blank response, mm for height or mm^2 for area.

m_b=Mass of beaker used to dry sample, mg.

m_f=Mass of sample filter, mg.

m_n=Mass of nonsulfate particulate matter, mg.

m_s=Mass of ammonium sulfate in the sample, mg.
m_t=Mass of beaker, filter, and dried sample, mg.
m_w=Mass of residue after evaporation of water blank, mg.
S=Calibration factor, µg/mm.
V_b=Volume of water blank, ml.
V_s=Volume of sample evaporated, 495 ml.

6.2 Water Blank Concentration.

$$C_w = \frac{m_w}{V_b} \quad \text{Eq. 5F-1}$$

6.3 Mass of Ammonium Sulfate.

$$m_s = \frac{\left(99\left(H_s - H_b\right)\right)}{(1000)} \quad \text{Eq. 5F-2}$$

6.4 Mass of Nonsulfate Particulate Matter.

$$m_n = m_t - m_b - m_s - m_f - V_s C_w \quad \text{Eq. 5F–3}$$

7. *Alternative Procedures*

7.1 The following procedure may be used as an alternative to the procedure in Section 4.3.

7.1.1 Apparatus. Same as for Method 6, Sections 2.3.3 to 2.3.6 with the following additions.

7.1.1.1 Beakers. 250-ml, one for each sample, and 600-ml.

7.1.1.2 Oven. Capable of maintaining temperatures of 75 ± 5 °C and 105 ±5 °C.

7.1.1.3 Buchner Funnel.

7.1.14 Glass Columns. 25-mm × 305-mm (1-in. × 12-in.) with Teflon stopcock.

7.1.1.5 Volumetric Flasks. 50-ml and 500-ml, one set for each sample, and 100-ml, 200-ml, and 1000-ml.

7.1.1.6 Pipettes. Two 20-ml and one 200-ml, one set for each sample, and 5-ml.

7.1.1.7 Filter Flasks. 500-ml.

7.1.1.8 Polyethylene Bottle. 500-ml, one for each sample.

7.1.2 Reagents. Same as Method 6, Sections 3.3.2 to 3.3.5 with the following additions:

7.1.2.1 Water, Ammonium Hydroxide, and Phenolphthalein. Same as Sections 3.2.1, 3.2.5, and 3.2.6 of this method, respectively.

7.1.2.2 Filter. Glass fiber to fit Buchner funnel.

7.1.2.3 Hydrochloric Acid (HCl), 1 M. Add 8.3 ml of concentrated HCl (12 M) to 50 ml of water in a 100-ml volumetric flask. Dilute to 100 ml with water.

7.1.2.4 Glass Wool.

7.1.2.5 Ion Exchange Resin. Strong cation exchange resin, hydrogen form, analytical grade.

7.1.2.6 pH Paper. Range of 1 to 7.

7.1.3 Analysis.

7.1.3.1 Ion Exchange Column Preparation. Slurry the resin with 1 M HCl in a 250-ml beaker, and allow to stand overnight. Place 2.5 cm (1 in.) of glass wool in the bottom of the glass column. Rinse the slurried resin twice with water. Resuspend the resin in water, and pour sufficent resin into the column to make a bed 5.1 cm (2 in.) deep. Do not allow air bubbles to become entrapped in the resin or glass wool to avoid channeling, which may produce erratic results. If necessary, stir the resin with a glass rod to remove air bubbles. after the column has been prepared, never let the liquid level fall below the top of the upper glass wool plug. Place a 2.5-cm (1-in.) plug of glass wool on top of the resin. Rinse the column with water until the eluate gives a pH of 5 or greater as measured with pH paper.

7.1.3.2 Sample Extraction. Follow the procedure given in Section 4.3.1 except do not dilute the sample to 500 ml.

7.1.3.3 Sample Residue. Place at least one clean glass fiber filter for each sample in a Buchner funnel, and rinse the filters with water. Remove the filters from the funnel, and dry them in an oven at 105 ± 5 °C; then cool in a desiccator. Weigh each filter to constant weight according to the procedure in Method 5, Section 4.3. Record the weight of each filter to the nearest 0.1 mg.

Assemble the vacuum filter apparatus, and place one of the clean, tared glass fiber filters in the Buchner funnel. Decant the liquid portion of the extracted sample (Section 7.1.3.2) through the tared glass fiber filter into a clean, dry, 500-ml filter flask. Rinse all the particulate matter remaining in the volumetric flask onto the glass fiber filter with water. Rinse the particulate matter with additional water. Transfer the filtrate to a 500-ml volumetric flask, and dilute to 500 ml with water. Dry the filter overnight at 105 ± 5 °C, cool in a desiccator, and weigh to the nearest 0.1 mg.

Dry a 250-ml beaker at 75 ± 5 °C, and cool in a desiccator; then weigh to constant weight to the nearest 0.1 mg. Pipette 200 ml of the filtrate that was saved into a tared 250-ml beaker; add five drops of phenolphtahalein indicator and sufficient concentrated ammonium hydroxide to turn the solution pink. Carefully evaporate the contents of the beaker to dryness at 75 ± 5 °C. Check for dryness every 30 minutes. Do not continue to bake the sample once it has dried. Cool the sample in a desiccator, and weigh to constant weight to the nearest 0.1 mg.

7.1.3.4 Sulfate Analysis. Adjust the flow rate through the ion exchange column to 3 ml/min. Pipette a 20-ml aliquot of the filtrate onto the top of the ion exchange column, and collect the eluate in a 50-ml volumetric flask. Rinse the column with two 15-ml portions of water. Stop collection of the eluate when the volume in the flask reaches

50-ml. Pipette a 20-ml aliquot of the eluate into a 250-ml Erlenmeyer flask, add 80 ml of 100 percent isopropanol and two to four drops of thorin indicator, and titrate to a pink end point using 0.0100 N barium perchlorate. Repeat and average the titration volumes. Run a blank with each series of samples. Replicate titrations must agree within 1 percent or 0.2 ml, whichever is larger. Perform the ion exchange and titration procedures on duplicate portions of the filtrate. Results should agree within 5 percent. Regenerate or replace the ion exchange resin after 20 sample aliquotes have been analyzed or if the end point of the titration becomes unclear.

NOTE: Protect the 0.0100 N barium perchlorate solution from evaporation at all times.

7.1.3.5 Blank Determination. Begin with a sample of water of the same volume as the samples being processed and carry it through the analysis steps described in Sections 7.1.3.3 and 7.1.3.4. A blank value larger than 5 mg should not be subtracted from the final particulate matter mass. Causes for large blank values should be investigated and any problems resolved before proceeding with further analyses.

7.1.4 Calibration. Calibrate the barium perchlorate solutions as in Method 6, Section 5.5.

7.1.5 Calculations.

7.1.5.1 Nomenclature. Same as Section 6.1 with the following additions:

m_a = Mass of clean analytical filter, mg.
m_d = Mass of dissolved particulate matter, mg.
m_e = Mass of beaker and dissolved particulate matter after evaporation of filtrate, mg.
m_p = Mass of insoluble particulate matter, mg.
m_r = Mass of analytical filter, sample filter, and insoluble particulate matter, mg.
m_{bk} = Mass of nonsulfate particulate matter in blank sample, mg.
N = Normality of $Ba(Cl0_4)_2$ titrant, meq/ml.
V_a = Volume of aliquot taken for titration, 20 ml.
V_c = Volume of titrant used for titration blank, ml.
V_d = Volume of filtrate evaporated, 200 ml.
V_e = Volume of eluate collected, 50 ml.
V_f = Volume of extracted sample, 500 ml.
V_i = Volume of filtrate added to ion exchange column, 20 ml.
V_t = Volume of $Ba(Cl0_4)_2$ titrant, ml.
W = Equivalent weight of ammonium sulfate, 66.07 mg/meq.

7.1.5.2 Mass of Insoluble Particulate Matter.

$$m_p = m_r - m_a - m_f \qquad \text{Eq. 5F-4}$$

7.1.5.3 Mass of Dissolved Particulate Matter.

$$m_d = (m_e - (V_f/V_d)\ m_b) \qquad \text{Eq. 5F–5}$$

7.1.5.4 Mass of Ammonium Sulfate.

$$m_s = \frac{(V_t - V_c)\ N\ W\ V_e\ V_f}{V_a\ V_i} \qquad \text{Eq. 5F-6}$$

7.1.5.5 Mass of Nonsulfate Particulate Matter.

$$m_n = m_p \pm m_d - m_s - m_{bk} \qquad \text{Eq. 5F-7}$$

8. *Bibliography.*

1. Mulik, J.D. and E. Sawicki. Ion Chromatographic Analysis of Environmental Pollutants. Ann Arbor, Ann Arbor Science Publishers, Inc. Vol. 2. 1979.

2. Sawicki, E., J.D. Mulik, and E. Wittgenstein. Ion Chromatographic Analysis of Environmental Pollutants. Ann Arbor, Ann Arbor Science Publishers, Inc. Vol. 1. 1978.

3. Siemer, D.D. Separation of Chloride and Bromide From Complex Matrices Prior to Ion Chromatographic Determination. Analytical Chemistry. *52*(12):1874–1877. October 1980.

4. Small, H., T.S. Stevens, and W.C. Bauman. Novel Ion Exchange Chromatographic Method Using Conductimetric Determination. Analytical Chemistry. *47*(11):1801. 1975.

METHOD 5G—DETERMINATION OF PARTICULATE EMISSIONS FROM WOOD HEATERS FROM A DILUTION TUNNEL SAMPLING LOCATION

1. Applicability and Principle

1.1 Applicability. This method is applicable for the determination of particulate matter emissions from wood heaters.

1.2 Principle. Particulate matter is withdrawn proportionally at a single point from a total collection hood and sampling tunnel that combines the wood heater exhaust with ambient dilution air. The particulate matter is collected on two glass fiber filters in series. The filters are maintained at a temperature of no greater than 32 °C (90 °F). The particulate mass is determined gravimetrically after removal of uncombined water.

There are three sampling train approaches described in this method: (1) One dual-filter dry sampling train operated at about 0.015 m^3/min, (2) One dual-filter plus impingers sampling train operated at about 0.015 m^3/min, and (3) two dual-filter dry sampling trains operated simultaneously at any flow rate. Options (2) and (3) are referenced in Section 7 of this method. The dual-filter sampling train equipment and operation, option (1), are described in detail in this method.

2. Apparatus

2.1 Sampling Train. The sampling train configuration is shown in Figure 5G–1 and consists of the following components:

2.1.1 Probe. Stainless steel (e.g., 316 or grade more corrosion resistant) or glass about 95 mm (3/8 in.) I.D., 0.6 m (24 in.) in length. If made of stainless steel, the probe shall be constructed from seamless tubing.

2.1.2 Pitot Tube. Type S, as described in Section 2.1 of Method 2. The Type S pitot tube assembly shall have a known coefficient, determined as outlined in Method 2, Section 4.

Alternatively, a standard pitot may be used as described in Method 2, Section 2.1.

2.1.3 Differential Pressure Gauge. Inclined manometer or equivalent device, as described in Method 2, Section 2.2. One manometer shall be used for velocity head (Δ p) readings and another (optional) for orifice differential pressure readings (Δ H).

2.1.4 Filter Holders. Two each made of borosilicate glass, stainless steel, or Teflon, with a glass frit or stainless steel filter support and a silicone rubber, Teflon, or Viton gasket. The holder design shall provide a positive seal against leakage from the outside or around the filters. The filter holders shall be placed in series with the backup filter holder located 25 to 100 mm (1 to 4 in.) downstream from the primary filter holder. The filter holder shall be capable of holding a filter with a 100 mm (4 in.) diameter, except as noted in Section 7.

NOTE: Mention of trade names or specific product does not constitute endorsement by the Environmental Protection Agency.

2.1.5 Filter Temperature Monitoring System. A temperature gauge capable of measuring temperature to within 1.5 percent of absolute temperature. The gauge shall be installed at the exit side of the front filter holder so that the sensing tip of the temperature gauge is in direct contact with the sample gas or in a thermowell as shown in Figure 5G–1. The temperature gauge shall comply with the calibration specifications in Method 2, Section 4. Alternatively, the sensing tip of the temperature gauge may be installed at the inlet side of the front filter holder.

2.1.6 Dryer. Any system capable of removing water from the sample gas to less than 1.5 percent moisture (volume percent) prior to the metering system. System includes monitor for demonstrating that sample gas temperature is less than 20 °C (68 °F).

2.1.7 Metering System. Same as Method 5, Section 2.1.8.

2.1.8 Barometer. Mercury, aneroid, or other barometer capable of measuring atmospheric pressure to within 2.5 mm Hg (0.1 in. Hg).

2.1.9 Dilution Tunnel Gas Temperature Measurement. A temperature gauge capable of measuring temperature to within 1.5 percent of absolute temperature.

2.2 Dilution Tunnel. The dilution tunnel apparatus is shown in Figure 5G–2 and consists of the following components:

2.2.1 Hood. Constructed of steel with a minimum diameter of 0.3 m (1 ft) on the large end and a standard 0.15 to 0.3 m (0.5 to 1 ft) coupling capable of connecting to standard 0.15 to 0.3 m (0.5 to 1 ft) stove pipe on the small end.

2.2.2 90° Elbows. Steel 90° elbows, 0.15 to 0.3 m (0.5 to 1 ft) in diameter for connecting mixing duct, straight duct and damper (optional) assembly. There shall be at least two 90° elbows upstream of the sampling section (see Figure 5G–2).

2.2.3 Straight Duct. Steel, 0.15 to 0.3 m (0.5 to 1 ft) in diameter to provide the ducting for the dilution apparatus upstream of the sampling section. Steel duct, 0.15 m (0.5 ft) in diameter shall be used for the sampling section. In the sampling section, at least 1.2 m (4 ft) downstream of the elbow, shall be two holes (velocity traverse ports) at 90° to each other of sufficient size to allow entry of the pitot for traverse measurements. At least 1.2 m (4 ft) downstream of the velocity traverse ports, shall be one hole (sampling port) of sufficient size to allow entry of the sampling probe. Ducts of larger diameter may be used for the sampling section, provided the specifications for minimum gas velocity and the dilution rate range shown in Section 4 are maintained. The length of duct from the hood inlet to the sampling ports shall not exceed 9.1 m (30 ft).

2.2.4 Mixing Baffles. Steel semicircles (two) attached at 90° to the duct axis on opposite sides of the duct midway between the two elbows upstream of sampling section. The space between the baffles shall be about 0.3 m (12 in.).

2.2.5 Blower. Squirrel cage or other fan capable of extracting gas from the dilution tunnel of sufficient flow to maintain the velocity and dilution rate specifications in Section 4 and exhausting the gas to the atmosphere.

2.3 Sample Recovery. Probe brushes, wash bottles, sample storage containers, petri dishes, and a funnel as described in Method 5, Section 2.2.1 through 2.2.4, and 2.2.8, respectively, are needed.

2.4 Analysis. Glass weighing dishes, desiccator, analytical balance, beakers (250 ml or smaller), hygrometer, and temperature gauge as described in Method 5, Sections 2.3.1 through 2.3.3 and 2.3.5 through 2.3.7, respectively, are needed.

3. Reagents

3.1 Sampling. The reagents used in sampling are as follows:

3.1.1 Filters. Glass fiber filters with a minimum diameter of 100 mm (4 in.), without organic binder, exhibiting at least 99.95 percent efficiency (<0.05 percent penetration) on 0.3-micron dioctyl phthalate smoke particles. Gelman A/E 61631 has been found acceptable for this purpose.

3.1.2 Stopcock Grease. Same as Method 5, Section 3.1.5.

3.2 Sample Recovery. Acetone-reagent grade, same as Method 5, Section 3.2.

3.3 Analysis. Two reagents are required for the analysis:

3.3.1 Acetone. As in Section 3.2.

3.3.2 Desiccant. Anhydrous calcium sulfate, calcium chloride, or silica gel, indicating type.

4. Procedure

4.1 Dilution Tunnel. A schematic of a dilution tunnel is shown in Figure 5G–2. The dilution tunnel dimensions and other features are described in Section 2.2. Assemble the dilution tunnel sealing joints and seams to prevent air leakage. Clean the dilution tunnel with an appropriately sized, wire chimney brush before each certification test.

4.1.1 Draft Determination. Prepare the wood heater as in Method 28, Section 6.2.1. Locate the dilution tunnel hood centrally over the wood heater stack exhaust. Operate the dilution tunnel blower at the flow rate to be used during the test run. Measure the draft imposed on the wood heater by the dilution tunnel (i.e., the difference in draft measured with and without the dilution tunnel operating) as described in Method 28, Section 6.2.3. Adjust the distance between the top of the wood heater stack exhaust and the dilution tunnel hood so that the dilution tunnel induced draft is less than 1.25 Pa (0.005 in. H_2O). Have no fire in the wood heater, close the wood heater doors, and open fully the air supply controls during this check and adjustment.

4.1.2 Smoke Capture. During the pretest ignition period described in Method 28, Section 6.3, operate the dilution tunnel and visually monitor the wood heater stack exhaust. Operate the wood heater with the doors closed and determine that 100 percent of the exhaust gas is collected by the dilution tunnel hood. If less than 100 percent of the wood heater exhaust gas is collected, adjust the distance between the wood heater stack and the dilution tunnel hood until no visible exhaust gas is escaping. Stop the pretest ignition period, and repeat the draft determination procedure described in Section 4.1.1.

4.2 Velocity Measurements. During the pretest ignition period described in Method 28, Section 6.3, conduct a velocity traverse to identify the point of average velocity. This single point shall be used for measuring velocity during the test run.

4.2.1 Velocity Traverse. Measure the diameter of the duct at the velocity traverse port location through both ports. Calculate the duct area using the average of the two diameters. A pretest leak-check of pitot lines as in Method 2, Section 3.1, is recommended. Place the calibrated pitot tube at the centroid of the stack in either of the velocity traverse ports. Adjust the damper or similar device on the blower inlet until the velocity indicated by the pitot is approximately 220 m/min (715 fpm). Continue to read the Δ p and temperature until the velocity has remained constant (less than 5 percent change) for 1 minute. Once a constant velocity is obtained at the centroid of the duct, perform a velocity traverse as outlined in Method 2, Section 3.3 using four points per traverse as outlined in Method 1. Measure the Δ p and tunnel temperature at each traverse point and record the readings. Calculate the total gas flow rate using calculations contained in Method 2, Section 5. Verify that the flow rate is 4 ±0.45 sm^3/min (140±14 scfm); if not, readjust the damper, and repeat the velocity traverse. The moisture may be assumed to be 4 percent (100 percent relative humidity at 85 °F). Direct moisture measurements such as outlined in EPA Method 4 are also permissible.

NOTE: If burn rates exceed 3 kg/hr (6.6 lb/hr), dilution tunnel duct flow rates greater than 4 sm^3/min (140 scfm) and sampling section duct diameters larger than 150 mm (6 in.) are allowed. If larger ducts or flow rates are used, the sampling section velocity shall be at least 220 m/min (715 fpm). In order to ensure measurable particulate mass catch, it is recommended that the ratio of the average mass flow rate in the dilution tunnel to the average fuel burn rate be less than 150:1 if larger duct sizes or flow rates are used.

4.2.2 Testing Velocity Measurements. After obtaining velocity traverse results that meet the flow rate requirements, choose a point of average velocity and place the pitot and thermocouple at that location in the duct. Alternatively, locate the pitot and thermocouple at the duct centroid and calculate a velocity correction factor for the centroidal position. Mount the pitot to ensure no movement during the test run and seal the port holes to prevent any air leakage. Align the pitot to be parallel with the duct axis, at the measurement point. Check that this condition is maintained during the test run (about 30-minute interva1s). Monitor the temperature and velocity during the pretest ignition period to ensure the proper flow rate is maintained. Make adjustments to the dilution tunnel flow rate as necessary.

4.3 Sampling.

4.3.1 Pretest Preparation. It is suggested that sampling equipment be maintained and calibrated according to the procedure described in APTD–0576.

Check and desiccate filters as described in Method 5, Section 4.1.1.

4.3.2 Preparation of Collection Train. During preparation and assembly of the sampling train, keep all openings where contamination can occur covered until just prior to assembly or until sampling is about to begin.

Using a tweezer or clean disposable surgical gloves, place one labeled (identified) and weighed filter in each of the filter holders. Be sure that each of the filters is properly centered and the gasket properly placed so as to prevent the sample gas stream from circumventing the filter. Check each of the filters for tears after assembly is completed.

Mark the probe with heat resistant tape or by some other method to denote the proper distance into the stack or duct.

Set up the train as in Figure 5G–1.

4.3.3 Leak-Check Procedures.

4.3.3.1 Pretest Leak-Check. A pretest leak-check is recommended, but not required. If the tester opts to conduct the pretest leak-check, conduct the leak-check as described in Method 5, Section 4.1.4.1. A vacuum 130 mm Hg (5 in. Hg) may be used instead of 380 mm Hg (15 in. Hg).

4.3.3.2 Post-Test Leak-Check. A leak-check is mandatory at the conclusion of each test run. The leak-check shall be done in accordance with the procedures described in Method 5, Section 4.1.4.1. A vacuum of 130 mm Hg (5 in. Hg) or the greatest vacuum measured during the test run, whichever is greater, may be used instead of 380 mm Hg (15 in. Hg).

4.3.4 Preliminary Determinations. Determine the pressure, temperature and the average velocity of the tunnel gases as in Section 4.2. Moisture content of diluted tunnel gases is assumed to be 4 percent for making flow rate calculations; the moisture content may be measured directly as in Method 4.

4.3.5 Sampling Train Operation. Position the probe inlet at the stack centroid, and block off the openings around the probe and porthole to prevent unrepresentative dilution of the gas stream. Be careful not to bump the probe into the stack wall when removing or inserting the probe through the porthole; this minimizes the chance of extracting deposited material.

Begin sampling at the start of the test run as defined in Method 28, Section 6.4.1. During the test run, maintain a sample flow rate proportional to the dilution tunnel flow rate (within 10 percent of the initial proportionality ratio) and a filter holder temperature of no greater than 32 °C (90 °F). The initial sample flow rate shall be approximately 0.015 m^3/min (0.5 cfm).

For each test run, record the data required on a data sheet such as the one shown in Figure 5G–3. Be sure to record the initial dry gas meter reading. Record the dry gas meter readings at the beginning and end of each sampling time increment and when sampling is halted. Take other readings as indicated on Figure 5G–3 at least once each 10 minutes during the test run. Since the manometer level and zero may drift because of vibrations and temperature changes, make periodic checks during the test run.

For the purposes of proportional sampling rate determinations, data from calibrated flow rate devices, such as glass rotameters, may be used in lieu of incremental dry gas meter readings. Proportional rate calculation procedures must be revised, but acceptability limits remain the same.

During the test run, make periodic adjustments to keep the temperature between (or upstream of) the filters at the proper level. Do not change sampling trains during the test run.

At the end of the test run (see Method 28, Section 6.4.6), turn off the coarse adjust valve, remove the probe from the stack, turn off the pump, record the final dry gas meter reading, and conduct a post-test leak-check, as outlined in Section 4.3.3. Also, leak-check the pitot lines as described in Method 2, Section 3.1; the lines must pass this leak-check in order to validate the velocity head data.

4.3.6 Calculation of Proportional Sampling Rate. Calculate percent proportionality (see Calculations, Section 6) to determine whether the run was valid or another test run should be made.

4.4 Sample Recovery. Begin recovery of the probe and filter samples as described in Method 5, Section 4.2, except that an acetone blank volume of about 50 ml or more may be used.

Treat the samples as follows:

Container No. 1. Carefully remove the filter from the primary filter holder and place it in its identified (labeled) petri dish container. Use a pair of tweezers and/or clean disposable surgical gloves to handle the filter. If it is necessary to fold the filter, do so such that the particulate cake is inside the fold. Carefully transfer to the petri dish any particulate matter and/or filter fibers which adhere to the filter holder gasket, by using a dry Nylon bristle brush and/or a sharp-edged blade. Seal the container.

Container No. 2. Remove the filter from the second filter holder using the same procedures as described above.

NOTE: The two filters may be placed in the same container for desiccation and weighing. Use the sum of the filter tare weights to determine the sample mass collected.

Container No. 3. Taking care to see that dust on the outside of the probe or other exterior surfaces does not get into the sample, quantitatively recover particulate matter or any condensate from the probe and filter holders by washing and brushing these components with acetone and placing the wash in a labeled (No. 3) glass container. At least three cycles of brushing and rinsing are necessary.

Between sampling runs, keep brushes clean and protected from contamination.

After all acetone washings and particulate matter have been collected in the sample containers, tighten the lids on the sample containers so that the acetone will not leak

out when transferred to the laboratory weighing area. Mark the height of the fluid levels to determine whether leakage occurs during transport. Label the containers clearly to identify contents. Requirements for capping and transport of sample containers are not applicable if sample recovery and analysis occur in the same room.

4.5 Analysis. Record the data required on a sheet such as the one shown in Figure 5G–4. Use the same analytical balance for determining tare weight and final sample weights. Handle each sample container as follows:

Containers No. 1 and 2. Leave the contents in the sample containers or transfer the filters and loose particulate to tared glass weighing dishes. Desiccate for no more than 36 hours before the initial weighing, weigh to a constant weight, and report the results to the nearest 0.1 mg. For purposes of this section, the term ''constant weight'' means a difference of no more than 0.5 mg or 1 percent of total sample weight (less tare weight), whichever is greater, between two consecutive weighings, with no less than 2 hours between weighings.

Container No. 3. Note the level of liquid in the container, and confirm on the analysis sheet whether leakage occurred during transport. If a noticeable amount of leakage has occurred, either void the sample or use methods, subject to the approval of the Administrator, to correct the final results. Determination of sample leakage is not applicable if sample recovery and analysis occur in the same room. Measure the liquid in this container either volumetrically to within 1 ml or gravimetrically to within 0.5 g. Transfer the contents to a tared 250 ml or smaller beaker and evaporate to dryness at ambient temperature and pressure. Desiccate and weigh to a constant weight. Report the results to the nearest 0.1 mg.

''Acetone Blank'' Container. Measure acetone in this container either volumetrically or gravimetrically. Transfer the acetone to a tared 250 ml or smaller beaker and evaporate to dryness at ambient temperature and pressure. Desiccate and weigh to a constant weight. Report the results to the nearest 0.1 mg.

5. Calibration

Maintain a laboratory record of all calibrations.

5.1 Pitot Tube. The Type S pitot tube assembly shall be calibrated according to the procedure outlined in Method 2, Section 4, prior to the first certification test and checked semiannually, thereafter. A standard pitot need not be calibrated but shall be inspected and cleaned, if necessary, prior to each certification test.

5.2 Volume Metering System.

5.2.1 Initial and Periodic Calibration. Before its initial use and at least semiannually thereafter, calibrate the volume metering system as described in Method 5, Section 5.3.1, except that the wet test meter with a capacity of 3.0 liters/rev (0.1 ft^3/rev) may be used. Other liquid displacement systems accurate to within 1 percent, may be used as calibration standards.

Procedures and equipment specified in Method 5, Section 7, for alternative calibration standards, including calibrated dry gas meters and critical orifices, are allowed for calibrating the dry gas meter in the sampling train. A dry gas meter used as a calibration standard shall be recalibrated at least once annually.

5.2.2 Calibration After Use. After each certification or audit test (four or more test runs conducted on a wood heater at the four burn rates specified in Method 28), check calibration of the metering system by performing three calibration runs at a single, intermediate flow rate as described in Method 5, Section 5.3.2.

Procedures and equipment specified in Method 5, Section 7, for alternative calibration standards are allowed for the post-test dry gas meter calibration check.

5.2.3 Acceptable Variation in Calibration. If the dry gas meter coefficient values obtained before and after a certification test differ by more than 5 percent, the certification test shall either be voided and repeated, or calculations for the certification test shall be performed using whichever meter coefficient value (i.e., before or after) gives the lower value of total sample volume.

5.3 Temperature Gauges. Use the procedure in Method 2, Section 4.3, to calibrate temperature gauges before the first certification or audit test and at least semiannually, thereafter.

5.4 Leak-Check of Metering System Shown in Figure 5G–1. That portion of the sampling train from the pump to the orifice meter shall be leak-checked prior to initial use and after each certification or audit test. Leakage after the pump will result in less volume being recorded than is actually sampled. Use the procedure described in Method 5, Section 5.6.

Similar leak-checks shall be conducted for other types of metering systems (i.e., without orifice meters).

5.5 Barometer. Calibrate against a mercury barometer before the first certification test and at least semiannually, thereafter. If a mercury barometer is used, no calibration is necessary. Follow the manufacturer's instructions for operation.

5.6 Analytical Balance. Perform a multipoint calibration (at least five points spanning the operational range) of the analytical balance before the first certification test and semiannually, thereafter. Before each certification test, audit the balance by weighing at least one calibration weight (class F) that corresponds to 50 to 150 percent

of the weight of one filter. If the scale cannot reproduce the value of the calibration weight to within 0.1 mg, conduct the multipoint calibration before use.

6. Calculations

Carry out calculations, retaining at least one extra decimal figure beyond that of the acquired data. Round off figures after the final calculation. Other forms of the equations may be used as long as they give equivalent results.

6.1 Nomenclature.

B_{ws}=Water vapor in the gas stream, proportion by volume (assumed to be 0.04).

c_s=Concentration of particulate matter in stack gas, dry basis, corrected to standard conditions, g/dsm³ (g/dscf).

E=Particulate emission rate, g/hr.

L_a=Maximum acceptable leakage rate for either a pretest or post-test leak-check, equal to 0.00057 m³/min (0.02 cfm) or 4 percent of the average sampling rate, whichever is less.

L_p= Leakage rate observed during the post-test leak-check, m³/min (cfm).

m_a=Mass of residue of acetone blank after evaporation, mg.

m_{aw}=Mass of residue from acetone wash after evaporation, mg.

m_n=Total amount of particulate matter collected, mg.

M_w=Molecular weight of water, 18.0 g/g-mole (18.0 lb/lb-mole).

P_{bar}=Barometric pressure at the sampling site, mm Hg (in. Hg).

PR=Percent of proportional sampling rate.

P_s=Absolute gas pressure in dilution tunnel, mm Hg (in. Hg).

P_{std}=Standard absolute pressure, 760 mm Hg (29.92 in. Hg).

Q_{sd}=Average gas flow rate in dilution tunnel, calculated as in Method 2, Equation 2–10, dsm³/hr (dscf/hr).

T_m=Absolute average dry gas meter temperature (see Figure 5G–3), ° K (° R).

T_{mi}=Absolute average dry gas meter temperature during each 10-minute interval, i, of the test run, ° K (° R).

T_s=Absolute average gas temperature in the dilution tunnel (see Figure 5G 3), ° K (° R).

T_{si}=Absolute average gas temperature in the dilution tunnel during each 10 minute interval, i, of the test run, ° K (° R).

T_{std}=Standard absolute temperature, 293 ° K (528 ° R).

V_a=Volume of acetone blank, ml.

V_{aw}=Volume of acetone used in wash, ml.

V_m=Volume of gas sample as measured by dry gas meter, dm³ (dcf).

V_{mi}=Volume of gas sample as measured by dry gas meter during each 10-minute interval, i, of the test run, dm³ (dcf).

$V_{m(std)}$=Volume of gas sample measured by the dry gas meter, corrected to standard conditions, dsm³ (dscf).

V_s=Average gas velocity in dilution tunnel, calculated by Method 2, Equation 2–9, m/sec (ft/sec). The dilution tunnel dry gas molecular weight may be assumed to be 29 g/g mole (lb/lb mole).

V_{si}=Average gas velocity in dilution tunnel during each 10-minute interval, i, of the test run, calculated by Method 2, Equation 2–9, m/sec (ft/sec).

Y=Dry gas meter calibration factor.

Δ H=Average pressure differential across the orifice meter, if used (see Figure 5G–2), mm H_2O (in. H_2O).

Θ=Total sampling time, min.

10=10 minutes, length of first sampling period.

13.6=Specific gravity of mercury.

100=Conversion to percent.

6.2 Dry Gas Volume. Correct the sample volume measured by the dry gas meter to standard conditions (20 °C, 760 mm Hg or 68 °F, 29.92 in. Hg) by using Equation 5G–1. (If no orifice meter is used in sampling train, assume Δ H=O or measure static pressure at dry gas meter outlet.)

$$V_{m(std)} = V_m Y\left(\frac{T_{std}}{T_m}\right)\left(\frac{P_{bar} + (\Delta H / 13.6)}{P_{std}}\right) = K_1 V_m Y\left(\frac{P_{bar} + (\Delta H / 13.6)}{T_m}\right) \quad Eq.\ 5G\text{-}1$$

where;

K_1=0.3858 ° K/mm Hg for metric units.

=17.64 ° R/in. Hg for English units.

NOTE: If L_p exceeds L_a, Equation 5G–1 must be modified as follows: Replace V_m in Equation 5G–1 with the expression:

$[V_m - (L_p - L_a)\Theta]$

6.3 Solvent Wash Blank.

$$m_{aw} = \left(\frac{m_a V_{aw}}{V_a}\right) \qquad \text{Eq. 5G-2}$$

6.4 Total Particulate Weight. Determine the total particulate catch, m_n, from the sum of the weights obtained from Containers 1, 2, and 3, less the acetone blank (see Figure 5G–4).

6.5 Particulate Concentration.

$c_s=(0.001\ g/mg)\ (m_n/V_{m(std)})$

Eq. 5G–3

6.6 Particulate Emission Rate.

$E=c_s\ Q_{sd}$

Eq. 5G–4

NOTE: Particulate emission rate results produced using the sampling train described in Section 2 and shown in Figure 5G–1 shall be adjusted for reporting purposes by the following methods adjustment factor:

$E_{adj}=1.82\ (E)^{0.83}$

Eq. 5G–5

6.7 Proportional Rate Variation. Calculate PR for each 10-minute interval, i, of the test run.

$$PR=\left(\frac{\theta\left(V_{mi}v_sT_mT_{si}\right)}{10\left(V_mv_{si}T_sT_{mi}\right)}\right)\times 100 \qquad \text{Eq. 5G-6}$$

Alternate calculation procedures for proportional rate variation may be used if other sample flow rate data (e.g., orifice flow meters or rotameters) are monitored to maintain proportional sampling rates. The proportional rate variations shall be calculated for each 10-minute interval by comparing the stack to nozzle velocity ratio for each 10-minute interval to the average stack to nozzle velocity ratio for the test run. Proportional rate variation may be calculated for intervals shorter than 10 minutes with appropriate revisions to Equation 5G–6.

6.8 Acceptable Results. If no more than 10 percent of the PR values for all the intervals exceed 90 percent ≤PR ≤110 percent, and if no PR value for any interval exceeds 80 percent ≤PR ≤120 percent, the results are acceptable. If the PR values for the test run are judged to be unacceptable, report the test run emission results, but do not include the results in calculating the weighted average emission rate, and repeat the test run.

7. Alternative Sampling and Analysis Procedure

7.1 Method 5H Sampling Train. The sampling and analysis train and procedures described in Method 5H, Sections 2.1, 3.1, 3.2, 5.1, 5.2.3, 5.3, and 5.6 may be used in lieu of similar sections in Method 5G. Operation of the Method 5H sampling train in the dilution tunnel is as described in Section 4.3.5 of this method. Filter temperatures and condenser conditions are as described in Method 5H. No methods adjustment factor as described in Equation 5G–5, Section 6.6, is to be applied to the particulate emission rate data produced by this alternative method.

7.2 Dual Sampling Trains. The tester may operate two sampling trains simultaneously at sample flow rates other than that specified in Section 4.3.5 provided the following specifications are met.

7.2.1 Sampling Train. The sampling train configuration shall be the same as specified in Section 2.1, except the probe, filter, and filter holder need not be the same sizes as specified in the applicable sections. Filter holders of plastic materials such as Nalgene or polycarbonate materials may be used (the Gelman 1119 filter holder has been found suitable for this purpose). With such materials, it is recommended not to use solvents in sample recovery. The filter face velocity shall not exceed 150 mm/sec (30 ft/min) during the test run. The dry gas meter shall be calibrated for the same flow rate range as encountered during the test runs. Two separate, complete sampling trains are required for each test run.

7.2.2 Probe Location. Locate the two probes in the dilution tunnel at the same level (see Section 2.2.3). Two sample ports are necessary. Locate the probe inlets within the 50 mm (2 in.) diameter centroidal area of the dilution tunnel no closer than 25 mm (1 in.) apart.

7.2.3 Sampling Train Operation. Operate the sampling trains as specified in Section 4.3.5, maintaining proportional sampling rates and starting and stopping the two sampling trains simultaneously. The pitot values as described in Section 4.2.2 shall be used to adjust sampling rates in both sampling trains.

7.2.4 Recovery and Analysis of Sample. Recover and analyze the samples from the two sampling trains separately, as specified in Sections 4.4 and 4.5.

For this alternative procedure, the probe and filter holder assembly may be weighed without sample recovery (use no solvents) described above in order to determine the sample weight gains. For this approach, weigh the clean, dry probe and filter holder assembly upstream of the front filter (without filters) to the nearest 0.1 mg to establish the tare weights. The filter holder section between the front and second filter need not be weighed. At the end of the test run, carefully clean the outside of the probe, cap the ends, and identify the sample (label). Remove the filters from the filter holder assemblies as described for containers Nos. 1 and 2 above. Reassemble the filter holder assembly, cap the ends, identify the sample (label), and transfer all the samples to the laboratory weighing area for final weighing. Descriptions of capping and transport of samples are not applicable if sample recovery and analysis occur in the same room.

For this alternative procedure, filters may be weighed directly without a petri dish. If the probe and filter holder assemb1y are to be weighed to determine the sample weight, rinse the probe with acetone to remove moisture before desiccating prior to the test run. Following the test run, transport the probe and fi1ter ho1der to the dessicator, and

uncap the openings of the probe and the filter holder assembly. Desiccate no more than 36 hours and weigh to a constant weight. Report the results to the nearest 0.1 mg.

7.2.5 Calculations. Calculate an emission rate (Section 6.6) for the sample from each sampling train separately and determine the average emission rate for the two values. The two emission rates shall not differ by more than 7.5 percent from the average emission rate, or 7.5 percent of the weighted average emission rate limit in the applicable standard, whichever is greater. If this specification is not met, the results are unacceptable. Report the results, but do not include the results in calculating the weighted average emission rate. Repeat the test run until acceptable results are achieved, report the average emission rate for the acceptable test run, and use the average in calculating the weighted average emission rate.

8. Bibliography

1. Same as for Method 5, citations 1 through 11, with the addition of the following:

2. Oregon Department of Environmental Quality Standard Method for Measuring the Emissions and Efficiencies of Woodstoves, June 8, 1984. Pursuant to Oregon Administrative Rules Chapter 340, Division 21.

3. American Society for Testing Materials. Proposed Test Methods for Heating Performance and Emissions of Residential Woodfired Closed Combustion-Chamber Heating Appliances. E–6 Proposal P 180. August 1986.

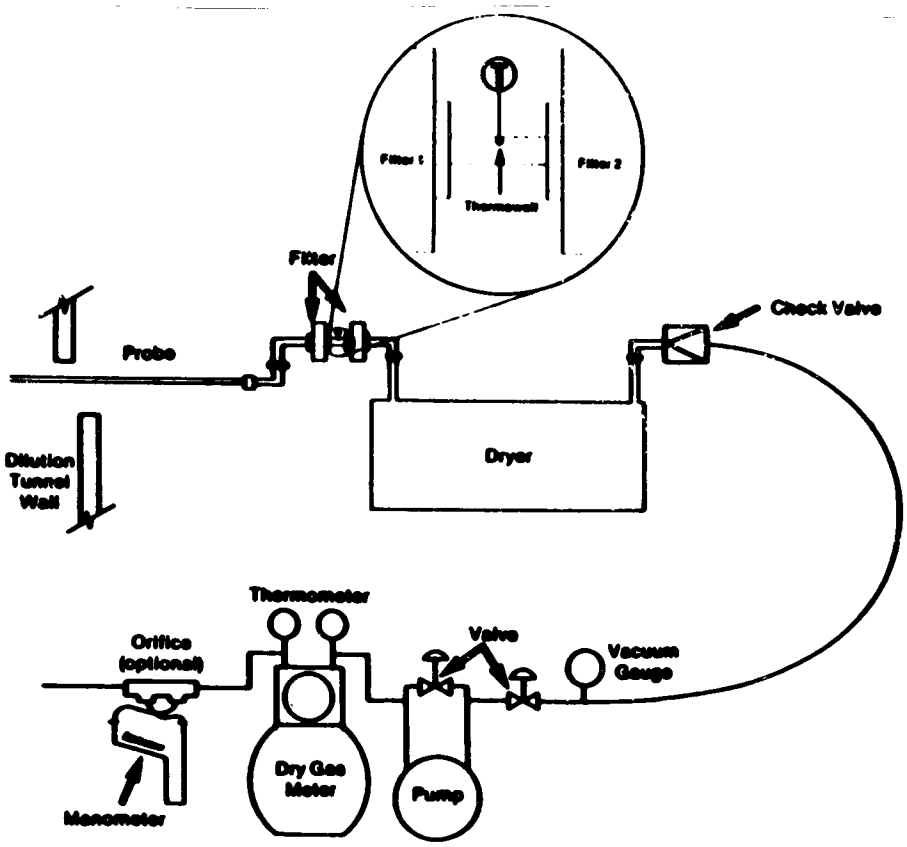

Figure 5G-1. Sampling train.

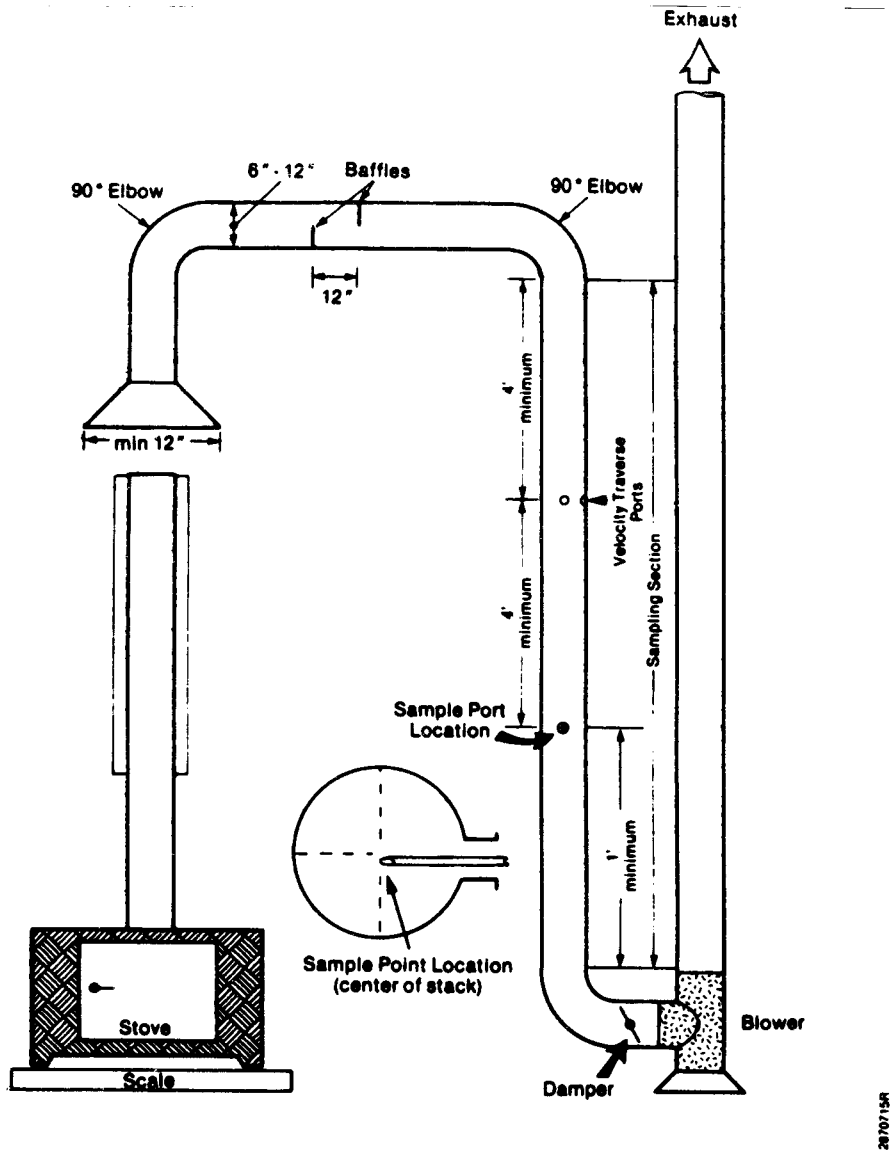

Figure 5G-2. Suggested construction details of the dilution tunnel.

Stove _____
Test Method _____
Operator _____
Date _____
Run No. _____
Start Time _____
Stop Time _____
Sample Box No. _____
Meter Box No. _____
Meter ΔH@ (optional) _____

Pitot tube coefficient, C_p _____
Room temperature, °C (°F) _____
Barometric pressure mb (in. Hg) _____
Measured or assumed moisture, % _____
Final leak rate, m³/min. (cfm) _____
Probe liner material _____
Draft or static pressure, mm H_2O (in. H_2O) _____
Filter Nos. _____

Clock time	Test run time (θ) min.	Vacuum mm Hg (in. Hg)	Tunnel temperature (T_d) °C (°F)	Velocity head (ΔP_s) mm (in.) H_2O	Sample flow rate indicator (orifice meter optional) mm H_2O (in. H_2O)	Gas meter volume m³ (ft³)	Gas sample temperature at dry gas meter (In) °C (°F)	Gas sample temperature at dry gas meter (Out) °C (°F)	Filter holder temperature °C (°F)	Temperature of gas leaving dryer or last impinger °C (°F)
Total							Avg.	Avg.		
Average							Avg			

Figure 5G-3. Particulate field data sheet.

Stove
Date
Run No.
Filter Nos.

Liquid lost during transport, ml
Acetone blank volume, ml
Acetone wash volume, ml

Acetone blank
concentration, mg/mg
Acetone wash blank, mg

Container No.	Weight of particulate collected, mg		
	Final weight	Tare weight	Weight gain
1.	.....	.....	.....
2.	.....	.....	.....
3.	.....	.....	.....
Total	.....	.....	.....
Less acetone blank	.....	.....	.....
Weight of particulate matter	.....	.....	.....

STACK MOISTURE MEASUREMENT DATA (OPTIONAL)

	Volume of liquid water collected	
	Impinger volume, ml	Silica gel weight, g
Final	.....	.....
Initial	.....	.....
Liquid collected	.....	.....
Total volume collected	.....	g[1] ml

[1] Convert weight of water to volume by dividing total weight increase by density of water (1 g/ml).

$$\frac{\text{Increase, g}}{(1\text{g / ml})} = \text{Volume water, ml}$$

Figure 5G–4. Analysis data sheet.

METHOD 5H—DETERMINATION OF PARTICULATE EMISSIONS FROM WOOD HEATERS FROM A STACK LOCATION

Applicability and Principle

1.1 Applicability. This method is applicable for the determination of particulate matter and condensible emissions from wood heaters.

1.2 Principle. Particulate matter is withdrawn proportionally from the wood heater exhaust and is collected on two glass fiber filters separated by impingers immersed in an ice bath. The first filter is maintained at a temperature of no greater than 120 °C (248 °F). The second filter and the impinger system are cooled such that the exiting temperature of the gas is no greater than 20 °C (68 °F). The particulate mass collected in the probe, on the filters, and in the impingers is determined gravimetrically after removal of uncombined water.

2. Apparatus

2.1 Sampling Train. The sampling train configuration is shown in Figure 5H–1. APTD–0576 is suggested for operating and maintenance procedures. The train consists of the following components:

2.1.1 Probe Nozzle. (Optional) Same as Method 5, Section 2.1.1. A straight sampling probe without a nozzle is an acceptable alternative.

2.1.2 Probe Liner. Same as Method 5, Section 2.1.2, except that the maximum length of the sample probe shall be 0.6 m (2 ft) and probe heating is optional.

2.1.3 Differential Pressure Gauge. Same as Method 5, Section 2.1.4.

2.1.4 Filter Holders. Two each of borosilicate glass, with a glass frit or stainless steel filter support and a silicone rubber, Teflon, or Viton gasket. The holder design shall provide a positive seal against leakage from the outside or around the filter. The front filter holder shall be attached immediately at the outlet of the probe and prior to the first impinger. The second filter holder shall be attached on the outlet of the third impinger and prior to the inlet of the fourth (silica gel) impinger.

NOTE: Mention of trade names or specific product does not constitute endorsement by the Environmental Protection Agency.

2.1.5 Filter Heating System. Same as Method 5, Section 2.1.6.

2.1.6 Condenser. Same as Method 5, Section 2.1.7, used to collect condensible materials and determine the stack gas moisture content.

2.1.7 Metering System. Same as Method 5, Section 2.1.8.

2.1.8 Barometer. Mercury, aneroid, or other barometer capable of measuring atmospheric pressure to within 2.5 mm Hg (0.1 in. Hg).

2.2 Stack Flow Rate Measurement System. A schematic of an example test system is shown in Figure 5H–2. The flow rate measurement system consists of the following components:

2.2.1 Sample Probe. A glass or stainless steel sampling probe.

2.2.2 Gas Conditioning System. A high density filter to remove particulate matter and a condenser capable of lowering the dew point of the gas to less than 5 °C (40 °F). Desiccant, such as Drierite, may be used to dry the sample gas. Do not use silica gel.

2.2.3 Pump. An inert (i.e., Teflon or stainless steel heads) sampling pump capable of delivering more than the total amount of sample required in the manufacturer's instructions for the individual instruments. A means of controlling the analyzer flow rate and a device for determining proper sample flow rate (e.g., precision rotameter, pressure gauge downstream of all flow controls) shall be provided at the analyzer. The requirements for measuring and controlling the analyzer flow rate are not applicable if data are presented that demonstrate the analyzer is insensitive to flow variations over the range encountered during the test.

2.2.4 CO Analyzer. Any analyzer capable of providing a measure of CO in the range of

0 to 10 percent by volume at least once every 10 minutes.

2.2.5 CO_2 Analyzer. Any analyzer capable of providing a measure of CO_2 in the range of 0 to 25 percent by volume at least once every 10 minutes.

NOTE: Analyzers with ranges less than those specified above may be used provided actual concentrations do not exceed the range of the analyzer.

2.2.6 Manifold. A sampling tube capable of delivering the sample gas to two analyzers and handling an excess of the total amount used by the analyzers. The excess gas is exhausted through a separate port.

2.2.7 Recorders (optional). To provide a permanent record of the analyzer outputs.

2.3 Proportional Gas Flow Rate System. To monitor stack flow rate changes and provide a measurement that can be used to adjust and maintain particulate sampling flow rates proportional to the stack flow rate. A schematic of the proportional flow rate system is shown in Figure 5H–2 and consists of the following components:

2.3.1 Tracer Gas Injection System. To inject a known concentration of SO_2 into the flue. The tracer gas injection system consists of a cylinder of SO_2, a gas cylinder regulator, a stainless steel needle valve or flow controller, a nonreactive (stainless steel and glass) rotameter, and an injection loop to disperse the SO_2 evenly in the flue.

2.3.2 Sample Probe. A glass or stainless steel sampling probe.

2.3.3 Gas Conditioning System. A combustor as described in Method 16A, Sections 2.1.5 and 2.1.6, followed by a high density filter to remove particulate matter, and a condenser capable of lowering the dew point of the gas to less than 5 °C (40 °F). Desiccant, such as Drierite, may be used to dry the sample gas. Do not use silica gel.

2.3.4 Pump. As described in Section 2.2.3.

2.3.5 SO_2 Analyzer. Any analyzer capable of providing a measure of the SO_2 concentration in the range of 0 to 1,000 ppm by volume (or other range necessary to measure the SO_2 concentration) at least once every 10 minutes.

2.3.6 Recorder (optional). To provide a permanent record of the analyzer outputs.

NOTE: Other tracer gas systems, including helium gas systems, are allowed for determining instantaneous proportional sampling rates.

2.4 Sample Recovery. Probe liner and probe nozzle brushes, wash bottles, sample storage containers, petri dishes, graduated cylinder or balance, plastic storage containers, funnel and rubber policeman, as described in Method 5, Sections 2.2.1 through 2.2.8, respectively, are needed.

2.5 Analysis. Weighing dishes, desiccator, analytical balance, beakers (250 ml or less), hygrometer or psychrometer, and temperature gauge as described in Method 5, Sections 2.3.1 through 2.3.7, respectively, are needed. In addition, a separatory funnel, glass or Teflon, 500 ml or greater, is needed.

3. Reagents

3.1 Sampling. The reagents used in sampling are as follows:

3.1.1 Filters. Glass fiber filters, without organic binder, exhibiting at least 99.95 percent efficiency (<0.05 percent penetration) on 0.3-micron dioctyl phthalate smoke particles. Gelman A/E 61631 filters have been found acceptable for this purpose.

3.1.2 Silica Gel. Same as Method 5, Section 3.1.2.

3.1.3 Water. Deionized distilled to conform to ASTM Specification D1193–77, Type 3 (incorporated by reference—see §60.17). Run blanks prior to field use to eliminate a high blank on test samples.

3.1.4 Crushed Ice.

3.1.5 Stopcock Grease. Same as Method 5, Section 3.1.5.

3.2 Sample Recovery. Same as Method 5, Section 3.2.

3.3 Cylinder Gases. For the purposes of this procedure, span value is defined as the upper limit of the range specified for each analyzer as described in Section 2.2 or 2.3. If an analyzer with a range different from that specified in this method is used, the span value shall be equal to the upper limit of the range for the analyzer used (see NOTE in Section 2.2.5).

3.3.1 Calibration Gases. The calibration gases for the CO_2, CO and SO_2 analyzers shall be CO_2, CO, or SO_2, as appropriate, in N_2. CO_2 and CO calibration gases may be combined in a single cylinder.

There are two alternatives for checking the concentrations of the calibration gases. (a) The first is to use calibration gases that are documented traceable to National Bureau of Standards Reference Materials. Use *Tracebility Protocol for Establishing True Concentrations of Gases Used for Calibrations and Audits of Continuous Source Emission Monitors* (Protocol Number 1) that is available from the Environmental Monitoring and Support Laboratory, Quality Assurance Branch, Mail Drop 77, Environmental Protection Agency, Research Triangle Park, North Carolina 27711. Obtain a certification from the gas manufacturer that the protocol was followed. These calibration gases are not to be analyzed with the test methods. (b) The second alternative is to use calibration gases not prepared according to the protocol. If this alternative is chosen, within 6 months prior to the certification test, analyze each of the CO_2 and CO calibration gas mixtures in triplicate using Method 3, and within 1 month prior to the certification test, analyze SO_2 calibration gas mixtures using Method 6. For the low-level, mid-level, or high-level gas mixtures, each of the individual SO_2 analytical results must be within 10 percent (or

10 ppm, whichever is greater) of the triplicate set average; CO_2 and CO test results must be within 0.5 percent CO_2 and CO; otherwise, discard the entire set and repeat the triplicate analyses. If the average of the triplicate test method results is within 5 percent for SO_2 gas (or 0.5 percent CO_2 and CO for the CO_2 and CO gases) of the calibration gas manufacturer's tag values, use the tag value; otherwise, conduct at least three additional test method analyses until the results of six individual SO_2 runs (the three original plus three additional) agree within 10 percent (or 10 ppm, whichever is greater) of the average (CO_2 and CO test results must be within 0.5 percent). Then use this average for the cylinder value. Four calibration gas levels are required as specified below:

3.3.1.1 High-level Gas. A gas concentration that is equivalent to 80 to 90 percent of the span value.

3.3.1.2 Mid-level Gas. A gas concentration that is equivalent to 45 to 55 percent of the span value.

3.3.1.3 Low-level Gas. A gas concentration that is equivalent to 20 to 30 percent of the span value.

3.3.1.4 Zero Gas. A gas concentration of less than 0.25 percent of the span value. Purified air may be used as zero gas for the CO_2, CO, and SO_2 analyzers.

3.3.2 SO_2 Injection Gas. A known concentration of SO_2 in N_2. The concentration must be at least 2 percent SO_2 with a maximum of 100 percent SO_2. The cylinder concentration shall be certified by the manufacturer to be within 2 percent of the specified concentration.

3.4 Analysis. Three reagents are required for the analysis:

3.4.1 Acetone. Same as 3.2.

3.4.2 Dichloromethane (Methylene Chloride). Reagent grade, <0.001 percent residue in glass bottles.

3.4.3 Desiccant. Anhydrous calcium sulfate, calcium chloride, or silica gel, indicating type.

4. Gas Measurement System Performance Specifications.

4.1 Response Time. The amount of time required for the measurement system to display 95 percent of a step change in gas concentration. The response time for each analyzer and gas conditioning system shall be no more than 2 minutes.

4.2 Zero Drift. The zero drift value for each analyzer shall be less than 2.5 percent of the span value over the period of the test run.

4.3 Calibration Drift. The calibration drift value measured with the mid-level calibration gas for each analyzer shall be less than 2.5 percent of the span value over the period of the test run.

4.4 Resolution. The resolution of the output for each analyzer shall be 0.5 percent of span value or less.

4.5 Calibration Error. The linear calibration curve produced using the zero and mid-level calibration gases shall predict the actual response to the low-level and high-level calibration gases within 2 percent of the span value.

5. Procedure

5.1 Pretest Preparation.

5.1.1 Filter and Desiccant. Same as Method 5, Section 4.1.1.

5.1.2 Sampling Probe and Nozzle. The sampling location for the particulate sampling probe shall be 2.45±0.15 m (8±0.5 ft) above the platform upon which the wood heater is placed (i.e., the top of the scale).

Select a nozzle, if used, sized for the range of velocity heads, such that it is not necessary to change the nozzle size in order to maintain proportional sampling rates. During the run, do not change the nozzle size.

Select a suitable probe liner and probe length to effect minimum blockage.

5.1.3 Preparation of Particulate Sampling Train. During preparation and assembly of the particulate sampling train, keep all openings where contamination can occur covered until just prior to assembly or until sampling is about to begin.

Place 100 ml of water in each of the first two impingers, leave the third impinger empty, and transfer approximately 200 to 300 g of preweighed silica gel from its container to the fourth impinger. More silica gel may be used, but care should be taken to ensure that it is not entrained and carried out from the impinger during sampling. Place the container in a clean place for later use in the sample recovery. Alternatively, the weight of the silica gel plus impinger may be determined to the nearest 0.5 g and recorded.

Using a tweezer or clean surgical gloves, place one labeled (identified) and weighed filter in each of the filter holders. Be sure that each of the filters is properly centered and the gasket properly placed so as to prevent the sample gas stream from circumventing the filter. Check the filters for tears after assembly is completed.

When glass liners are used, install the selected nozzle using a Viton A O-ring. Other connecting systems using either 316 stainless steel or Teflon ferrules may be used. Mark the probe with heat resistant tape or by some other method to denote the proper distance into the stack or duct.

Set up the train as in Figure 5H 1, using (if necessary) a very light coat of silicone grease on all ground glass joints, greasing only the outer portion (see APTD–0576) to avoid possibility of contamination by the silicone grease.

Place crushed ice around the impingers.

5.1.4 Leak-Check Procedures.

5.1.4.1 Pretest Leak-Check. A pretest leak-check is recommended, but not required. If the tester opts to conduct the pretest leak-check, conduct the leak-check as described in Method 5, Section 4.1.4.1, except that a vacuum of 130 mm Hg (5 in. Hg) may be used instead of 380 mm Hg (15 in. Hg).

5.1.4.2 Leak-Checks During Sample Run. If, during the sampling run, a component (e.g., filter assembly or impinger) change becomes necessary, conduct a leak-check as described in Method 5, Section 4.1.4.2.

5.1.4.3 Post-Test Leak-Check. A leak-check is mandatory at the conclusion of each sampling run. The leak-check shall be done in accordance with the procedures described in Method 5, Section 4.1.4.3, except that a vacuum of 130 mm Hg (5 in. Hg) or the greatest vacuum measured during the test run, whichever is greater, may be used instead of 380 mm Hg (15 in. Hg).

5.1.5 Tracer Gas Procedure. A schematic of the tracer gas injection and sampling systems is shown in Figure 5H–2.

5.1.5.1 SO_2 Injection Probe. Install the SO_2 injection probe and dispersion loop in the stack at a location 2.8±0.15 m (9.5±0.5 ft) above the sampling platform.

5.1.5.2 SO_2 Sampling Probe. Install the SO_2 sampling probe at the centroid of the stack at a location 4±0.15 m (13.5±0.5 ft) above the sampling platform.

5.1.6 Flow Rate Measurement System. A schematic of the flow rate measurement system is shown in Figure 5H–2. Locate the flow rate measurement sampling probe at the centroid of the stack at a location 2.3±0.3 m (7.5±1 ft) above the sampling platform.

5.2 Test Run Procedures. The start of the test run is defined as in Method 28, Section 6.4.1.

5.2.1 Tracer Gas Procedure. Within 1 minute after closing the wood heater door at the start of the test run, meter a known concentration of SO_2 tracer gas at a constant flow rate into the wood heater stack. Monitor the SO_2 concentration in the stack, and record the SO_2 concentrations at 10-minute intervals or more often at the option of the tester. Adjust the particulate sampling flow rate proportionally to the SO_2 concentration changes using Equation 5H–6 (e.g., the SO_2 concentration at the first 10-minute reading is measured to be 100 ppm; the next 10 minute SO_2 concentration is measured to be 75 ppm: the particulate sample flow rate is adjusted from the initial 0.15 cfm to 0.20 cfm). A check for proportional rate variation shall be made at the completion of the test run using Equation 5H–10.

5.2.2 Volumetric Flow Rate Procedure. Apply stoichiometric relationships to the wood combustion process in determining the exhaust gas flow rate as follows:

5.2.2.1 Test Fuel Charge Weight. Record the test fuel charge weight in kilograms (wet) as specified in Method 28, Section 6.4.2. The wood is assumed to have the following weight percent composition: 51 percent carbon, 7.3 percent hydrogen, 41 percent oxygen. Record the wood moisture for each wood charge as described in Method 28, Section 6.2.5. The ash is assumed to have negligible effect on associated C, H, O concentrations after the test burn.

5.2.2.2 Measured Values. Record the CO and CO_2 concentrations in the stack on a dry basis every 10 minutes during the test run or more often at the option of the tester. Average these values for the test run. Use as a mole fraction (e.g., 10 percent CO_2 is recorded as 0.10) in the calculations to express total flow Equation 5H–7.

5.2.3 Particulate Train Operation. For each run, record the data required on a data sheet such as the one shown in Figure 5H–3. Be sure to record the initial dry gas meter reading. Record the dry gas meter readings at the beginning and end of each sampling time increment, when changes in flow rates are made, before and after each leak-check, and when sampling is halted. Take other readings as indicated on Figure 5H–3 at least once each 10 minutes during the test run.

Remove the nozzle cap, verify that the filter and probe heating systems are up to temperature, and that the probe is properly positioned. Position the nozzle, if used, facing into gas stream, or the probe tip in the 50 mm (2 in.) centroidal area of the stack.

Be careful not to bump the probe tip into the stack wall when removing or inserting the probe through the porthole; this minimizes the chance of extracting deposited material.

When the probe is in position, block off the openings around the probe and porthole to prevent unrepresentative dilution of the gas stream.

Begin sampling at the start of the test run as defined in Method 28, Section 6.4.1, start the sample pump, and adjust the sample flow rate to between 0.003 and 0.015 m^3/min (0.1 and 0.5 cfm). Adjust the sample flow rate proportionally to the stack flow during the test run (Section 5.2.1), and maintain a proportional sampling rate (within 10 percent of the desired value) and a filter holder temperature no greater than 120 °C (248 °F).

During the test run, make periodic adjustments to keep the temperature around the filter holder at the proper level. Add more ice to the impinger box and, if necessary, salt to maintain a temperature of less than 20 °C (68 °F) at the condenser/silica gel outlet.

If the pressure drop across the filter becomes too high, making sampling difficult to maintain, either filter may be replaced during a sample run. It is recommended that another complete filter assembly be used rather than attempting to change the filter itself. Before a new filter assembly is installed, conduct a leak-check (see Section

5.1.4.2). The total particulate weight shall include the summation of all filter assembly catches. The total time for changing sample train components shall not exceed 10 minutes. No more than one component change is allowed for any test run.

At the end of the test run, turn off the coarse adjust valve, remove the probe and nozzle from the stack, turn off the pump, record the final dry gas meter reading, and conduct a post-test leak-check, as outlined in Section 5.1.4.3.

5.3 Sample Recovery. Begin recovery of the probe and filter sample as described in Method 5, Section 4.2, except that an acetone blank volume of about 50 ml may be used. Treat the samples as follows:

Container No. 1. Carefully remove the filter from the front filter holder and place it in its identified petri dish container. Use a pair of tweezers and/or clean disposable surgical gloves to handle the filter. If it is necessary to fold the filter, do so such that the particulate cake is inside the fold. Carefully transfer to the petri dish any particulate matter and/or filter fibers which adhere to the filter holder gasket, by using a dry Nylon bristle brush and/or a sharp-edged blade. Seal and label the container.

Container No. 2. Remove the filter from the back filter holder using the same procedures as described above.

Container No. 3. Same as Method 5, Section 4.2 for Container No. 2. except that descriptions of capping and sample transport are not applicable if sample recovery and analysis occur in the same room.

Container No. 4. Treat the impingers as follows: Measure the liquid which is in the first three impingers to within 1 ml by using a graduated cylinder or by weighing it to within 0.5 g by using a balance (if one is available). Record the volume or weight of liquid present. This information is required to calculate the moisture content of the effluent gas.

Transfer the water from the first, second and third impingers to a glass container. Tighten the lid on the sample container so that water will not leak out. Rinse impingers and graduated cylinder, if used, with acetone three times or more. Avoid direct contact between the acetone and any stopcock grease or collection of any stopcock grease in the rinse solutions. Add these rinse solutions to sample Container No. 3.

Whenever possible, containers should be transferred in such a way that they remain upright at all times. Descriptions of capping and transport of samples are not applicable if sample recovery and analysis occur in the same room.

Container No. 5. Transfer the silica gel from the fourth impinger to its original container and seal. A funnel may make it easier to pour the silica gel without spilling. A rubber policeman may be used as an aid in removing the silica gel from the impinger. It is not necessary to remove the small amount of dust particles that may adhere to the impinger wall and are difficult to remove. Since the gain in weight is to be used for moisture calculations, do not use any water or other liquids to transfer the silica gel. If a balance is available, follow the procedure for Container No. 5 in Section 5.4.

5.4 Analysis. Record the data required on a sheet such as the one shown in Figure 5H–4. Handle each sample container as follows:

Containers No. 1 and 2. Leave the contents in the shipping container or transfer both of the filters and any loose particulate from the sample container to a tared glass weighing dish. Desiccate for no more than 36 hours. Weigh to a constant weight and report the results to the nearest 0.1 mg. For purposes of this Section, 5.6, the term ''constant weight'' means a difference of no more than 0.5 mg or 1 percent of total weight less tare weight, whichever is greater, between two consecutive weighings, with no less than 2 hours between weighings.

Container No. 3. Note the level of liquid in the container and confirm on the analysis sheet whether leakage occurred during transport. If a noticeable amount of leakage has occurred, either void the sample or use methods, subject to the approval of the Administrator, to correct the final results. Determination of sample leakage is not applicable if sample recovery and analysis occur in the same room. Measure the liquid in this container either volumetrically to within 1 ml or gravimetrically to within 0.5 g. Transfer the contents to a tared 250-ml or smaller beaker, and evaporate to dryness at ambient temperature and pressure. Desiccate and weigh to a constant weight. Report the results to the nearest 0.1 mg.

Container No. 4. Note the level of liquid in the container and confirm on the analysis sheet whether leakage occurred during transport. If a noticeable amount of leakage has occurred, either void the sample or use methods, subject to the approval of the Administrator, to correct the final results. Determination of sample leakage is not applicable if sample recovery and analysis occur in the same room. Measure the liquid in this container either volumetrically to within 1 ml or gravimetrically to within 0.5 g. Transfer the contents to a 500 ml or larger separatory funnel. Rinse the container with water, and add to the separatory funnel. Add 25 ml of dichloromethane to the separatory funnel, stopper and vigorously shake 1 minute, let separate and transfer the dichloromethane (lower layer) into a tared beaker or evaporating dish. Repeat twice more. It is necessary to rinse the Container No. 4 with dichloromethane. This rinse is added to the impinger extract container. Transfer the remaining water from the separatory funnel to a tared beaker or

evaporating dish and evaporate to dryness at 220 °F (105 °C). Desiccate and weigh to a constant weight. Evaporate the combined impinger water extracts at ambient temperature and pressure. Desiccate and weigh to a constant weight. Report both results to the nearest 0.1 mg.

Container No. 5. Weigh the spent silica gel (or silica gel plus impinger) to the nearest 0.5 g using a balance.

''Acetone Blank'' Container. Measure acetone in this container either volumetrically or gravimetrically. Transfer the acetone to a tared 250-ml or smaller beaker, and evaporate to dryness at ambient temperature and pressure. Desiccate and weigh to a constant weight. Report the results to the nearest 0.1 mg.

''Dichloromethane'' Container. Measure 75 ml of dichloromethane in this container and treat it the same as the ''acetone blank.''

''Water Blank'' Container. Measure 200 ml water into this container either volumetrically or gravemetrically. Transfer the water to a tared 250-ml beaker and evaporate to dryness at 105 °C (221 °F). Desiccate and weigh to a constant weight.

6. Calibration

Maintain a laboratory record of all calibrations.

6.1 Volume Metering System.

6.1.1 Initial and Periodic Calibration. Before the first certification or audit test and at least semiannually, thereafter, calibrate the volume metering system as described in Method 5G, Section 5.2.1.

6.1.2 Calibration After Use. Same as Method 5G, Section 5.2.2.

6.1.3 Acceptable Variation in Calibration. Same as Method 5G, Section 5.2.3.

6.2 Probe Heater Calibration. (Optional) The probe heating system shall be calibrated before the first certification or audit test. Use the procedure described in Method 5, Section 5.4.

6.3 Temperature Gauges. Use the procedure in Method 2, Section 4.3, to calibrate in-stack temperature gauges before the first certification or audit test and semiannually, thereafter.

6.4 Leak-Check of Metering System Shown in Figure 5H–1. That portion of the sampling train from the pump to the orifice meter shall be leak-checked after each certification or audit test. Use the procedure described in Method 5, Section 5.6.

6.5 Barometer. Calibrate against a mercury barometer before the first certification test and semiannually, thereafter. If a mercury barometer is used, no calibration is necessary. Follow the manufacturer's instructions for operation.

6.6 SO_2 Injection Rotameter. Calibrate the SO_2 injection rotameter system with a soap film flowmeter or similar direct volume measuring device with an accuracy of ± 2 percent. Operate the rotameter at a single reading for at least three calibration runs for 10 minutes each. When three consecutive calibration flow rates agree within 5 percent, average the three flow rates, mark the rotameter at the calibrated setting, and use the calibration flow rate as the SO_2 injection flow rate during the test run. Repeat the rotameter calibration before the first certification test and semiannually, thereafter.

6.7 Analyzer Calibration Error Check. Conduct the analyzer calibration error check prior to each certification test.

6.7.1 Calibration Gas Injection. After the flow rate measurement system and the tracer gas measurement system have been prepared for use (Sections 5.1.5.2 and 5.1.6), introduce zero gases and then the mid-level calibration gases for each analyzer. Set the analyzers' output responses to the appropriate levels. Then introduce the low-level and high-level calibration gases, one at a time, for each analyzer. Record the analyzer responses.

6.7.2 Acceptability Values. If the linear curve for any analyzer determined from the zero and mid-level calibration gases' responses does not predict the actual responses of the low-level and high-level gases within 2 percent of the span value, the calibration of that analyzer shall be considered invalid. Take corrective measures on the measurement system before repeating the calibration error check and proceeding with the test runs.

6.8 Measurement System Response Time. Introduce zero gas at the calibration gas valve into the flow rate measurement system and the tracer gas measurement system until all readings are stable. Then, quickly switch to introduce the mid-level calibration gas at the calibration value until a stable value is obtained. A stable value is equivalent to a change of less than 1 percent of span value for 30 seconds. Record the response time. Repeat the procedure three times. Conduct the response time check for each analyzer separately before its initial use and at least semiannually thereafter.

6.9 Measurement System Drift Checks. Immediately prior to the start of each test run (within 1 hour of the test run start), introduce zero and mid-level calibration gases, one at a time, to each analyzer through the calibration valve. Adjust the analyzers to respond appropriately. Immediately following each test run (within 1 hour of the end of the test run), or if adjustments to the analyzers or measurement systems are required during the test run, reintroduce the zero- and mid-level calibration gases and record the responses, as described above. Make no adjustments to the analyzers or the measurement system until after the drift checks are made.

If the difference between the analyzer responses and the known calibration gas values exceed the specified limits (Sections 4.2

and 4.3), the test run will be considered invalid and shall be repeated following corrections to the measurement system. Alternatively, recalibrate the measurement system and recalculate the measurement data. Report the test run results using both the initial and final calibration data.

6.10 Analytical Balance. Perform a multipoint calibration (at least five points spanning the operational range) of the analytical balance before the first certification test and semiannually, thereafter. Before each certification test, audit the balance by weighing at least one calibration weight (class F) that corresponds to 50 to 150 percent of the weight of one filter. If the scale cannot reproduce the value of the calibration weight to within 0.1 mg, conduct the multipoint calibration before use.

7. Calculations

Carry out calculations, retaining at least one extra decimal figure beyond that of the acquired data. Round off figures after the final calculation. Other forms of the equations may be used as long as they give equivalent results.

7.1 Nomenclature.

a=Sample flow rate adjustment factor.

BR=dry wood burn rate, kg/hr (lb/hr), from Method 28, Section 8.3.

B_{ws}=Water vapor in the gas stream, proportion by volume.

c_s=Concentration of particulate matter in stack gas, dry basis, corrected to standard conditions, g/dsm^3 (g/dscf).

E=Particulate emission rate, g/hr.

Δ H=Average pressure differential across the orifice meter (see Figure 5H–1), mm H_2O (in. H_2O).

L_a=Maximum acceptable leakage rate for either a post-test leak check or for a leak-check following a component change; equal to 0.00057 m^3/min (0.02 cfm) or 4 percent of the average sampling rate, whichever is less.

L_1=Individual leakage rate observed during the leak-check conducted before a component change, m^3/min (cfm).

L_p=Leakage rate observed during the post-test leak-check, m^3/min (cfm).

m_n=Total amount of particulate matter collected, mg.

m_a=Mass of residue of solvent after evaporation, mg.

N_C=Gram atoms of carbon/gram of dry fuel (lb/lb), equal to 0.0425.

N_T=Total dry moles of exhaust gas/Kg of dry wood burned, g-moles/kg (lb-moles/lb).

PR=Percent of proportional sampling rate.

P_{bar}=Barometric pressure at the sampling site, mm Hg (in. Hg).

P_{std}=Standard absolute pressure, 760 mm Hg (29.92 in. Hg).

Q_{sd}=Total gas flow rate, dsm^3/hr (dscf/hr).

Q_T=Flow of tracer gas, liters/min.

S_i=Concentration measured at the SO_2 analyzer for the ''ith'' 10 minute interval, ppm.

S_1=Concentration measured at the SO_2 analyzer for the first 10-minute interval, ppm.

T_1=Absolute average stack gas temperature for the first 10-minute interval, °K (°R).

T_i=Absolute average stack gas temperature at the ''ith'' 10-minute interval, °K (°R).

T_m=Absolute average dry gas meter temperature (see Figure 5H–3), °K (°R).

T_{std}=Standard absolute temperature, 293 °K (528 °R).

V_a=volume of solvent blank, ml.

V_{aw}=Volume of solvent used in wash, ml.

V_{lc}=Total volume of liquid collected in impingers and silica gel (see Figure 5H–4), ml.

V_m=Volume of gas sample as measured by dry gas meter, dm^3 (dcf).

$V_{m(std)}$=Volume of gas sample measured by the dry gas meter, corrected to standard conditions, dsm^3 (dscf).

$V_{ml(std)}$=Volume of gas sample measured by the dry gas meter during the first 10-minute interval, corrected to standard conditions, dsm^3 (dscf).

$V_{mi(std)}$=Volume of gas sample measured by the dry gas meter during the ''ith'' 10-minute interval, dsm^3 (dscf).

$V_{w(std)}$=Volume of water vapor in the gas sample, corrected to standard conditions, sm^3 (scf).

W_a=Weight of residue in solvent wash, mg.

Y=Dry gas meter calibration factor.

Y_{CO}=Measured mole fraction of CO (dry), average from Section 5.2.2.2, g/g-mole (lb/lb-mole).

Y_{CO2}=Measured mole fraction of CO_2 (dry), average from Section 5.2.2.2, g/g-mole (lb/lb-mole).

Y_{HC}=Assumed mole fraction of HC (dry), g/g-mole (lb/lb-mole);
=0.0088 for catalytic wood heaters;
=0.0132 for non-catalytic wood heaters;
=0.0080 for pellet-fired wood heaters.

10=Length of first sampling period, minutes.

13.6=Specific gravity of mercury.

100=Conversion to percent.

θ=Total sampling time, min.

θ_1=Sampling time interval, from the beginning of a run until the first component change, min.

7.2 Average dry gas meter temperature and average orifice pressure drop. See data sheet (Figure 5H–3).

7.3 Dry Gas Volume. Correct the sample volume measured by the dry gas meter to standard conditions (20 °C, 760 mm Hg or 68 °F, 29.92 in. Hg) by using Equation 5H–1.

$$V_{m(std)} = V_m Y \frac{T_{std}}{T_m} \left(\frac{P_{bar} + \frac{\Delta H}{13.6}}{P_{std}} \right) = K_1 V_m Y \left(\frac{P_{bar} + (\Delta H/13.6)}{T_m} \right) \quad \text{Eq. 5H-1}$$

where;

K_1=0.3858 ^{0} K/m. Hg for metric units.

=17.64 ^{0} R/in. Hg for English units.

NOTE: Equation 5H–1 can be used as written unless the leakage rate observed during any of the mandatory leak-checks (i.e., the post-test leak-check or leak-check conducted before a component change) exceeds L_a.

If L_p exceeds L_a, Equation 5H–1 must be modified as follows:

(a) Case I. No component changes made during sampling run. In this case, replace V_m in Equation 5H–1 with the expression:

$[V_m-(L_p-L_a)\theta]$

(b) Case II. One component change made during the sampling run. In this case, replace V_m in Equation 5H–1 by the expression:

$V_m-(L_1-L_a)\theta_1$

and substitute only for those leakage rates (L_1 or L_p) which exceed L_a.

7.4 Volume of Water Vapor.

$V_{w(std)}=K_2V_{lc}$ Eq. 5H–2

where:

K_2=0.001333 m^3/ml for metric units

=0.04707 ft^3/ml for English units.

7.5 Moisture Content.

$$B_{ws} = \left(\frac{V_{w(std)}}{V_{m(std)} + V_{w(std)}} \right) \quad \text{Eq. 5H-3}$$

7.6 Solvent Wash Blank.

$$W_a = \left(\frac{m_a V_{aw}}{V_a} \right) \quad \text{Eq. 5H-4}$$

7.7 Total Particulate Weight. Determine the total particulate catch from the sum of the weights obtained from containers 1, 2, 3, and 4 less the appropriate solvent blanks (see Figure 5H–4).

NOTE: Refer to Method 5, Section 4.1.5 to assist in calculation of results involving two filter assemblies.

7.8 Particulate Concentration.

$c_s=(0.001\ g/mg)\ (m_n/V_{m(std)})$

Eq. 5H–5

7.9 Sample Flow Rate Adjustment.

$$a = \frac{S_1}{S_i} \quad \text{Eq. 5H-6}$$

7.10 Carbon Balance for Total Moles of Exhaust Gas (dry)/Kg of Wood Burned in the Exhaust Gas.

$$N_T = \left(\frac{K_3 N_C}{(Y_{CO_2} + Y_{CO} + Y_{HC})} \right) \quad \text{Eq. 5H-7}$$

where:

K_3=1000 g/kg for metric units.

K_3=1.0 lb/lb for English units.

NOTE: The NO_x/SO_x portion of the gas is assumed to be negligible.

7.11 Total Stack Gas Flow Rate.

$Q_{sd}=K_4\ N_TBR$

Eq. 5H–8

where:

K_4=0.02406 for metric units, dsm^3/g-mole.

=384.8 for English units, dscf/lb-mole.

7.12 Particulate Emission Rate.

$E=c_s\ Q_{sd}$

Eq. 5H–9

7.13 Proportional Rate Variation. Calculate PR for each 10-minute interval, i, of the test run.

$$PR = \left(\frac{\theta\ S_i\ V_{mi(std)}}{10 \sum_{i=1}^{n} [S_i\ V_{mi(std)}]} \right) \times 100 \quad \text{Eq. 5H-10}$$

7.14 Acceptable Results. If no more than 15 percent of the PR values for all the intervals exceed 90 percent ≤ PR ≤ 110 percent, and if no PR value for any interval exceeds 75 ≤

PR ≤ 125 percent, the results are acceptable. If the PR values for the test runs are judged to be unacceptable, report the test run emission results, but do not include the test run results in calculating the weighted average emission rate, and repeat the test.

8. Bibliography

1. Same as for Method 5, citations 1 through 11, with the addition of the following:

2. Oregon Department of Environmental Quality Standard Method for Measuring the emissions and efficiencies of Woodstoves, July 8, 1984. Pursuant to Oregon Administrative Rules Chapter 340, Division 21.

3. American Society for Testing Materials. Proposed Test Methods for Heating Performance and Emissions of Residential Woodfired Closed Combustion-Chamber Heating Appliances. E–6 Proposal P 180. August 1986.

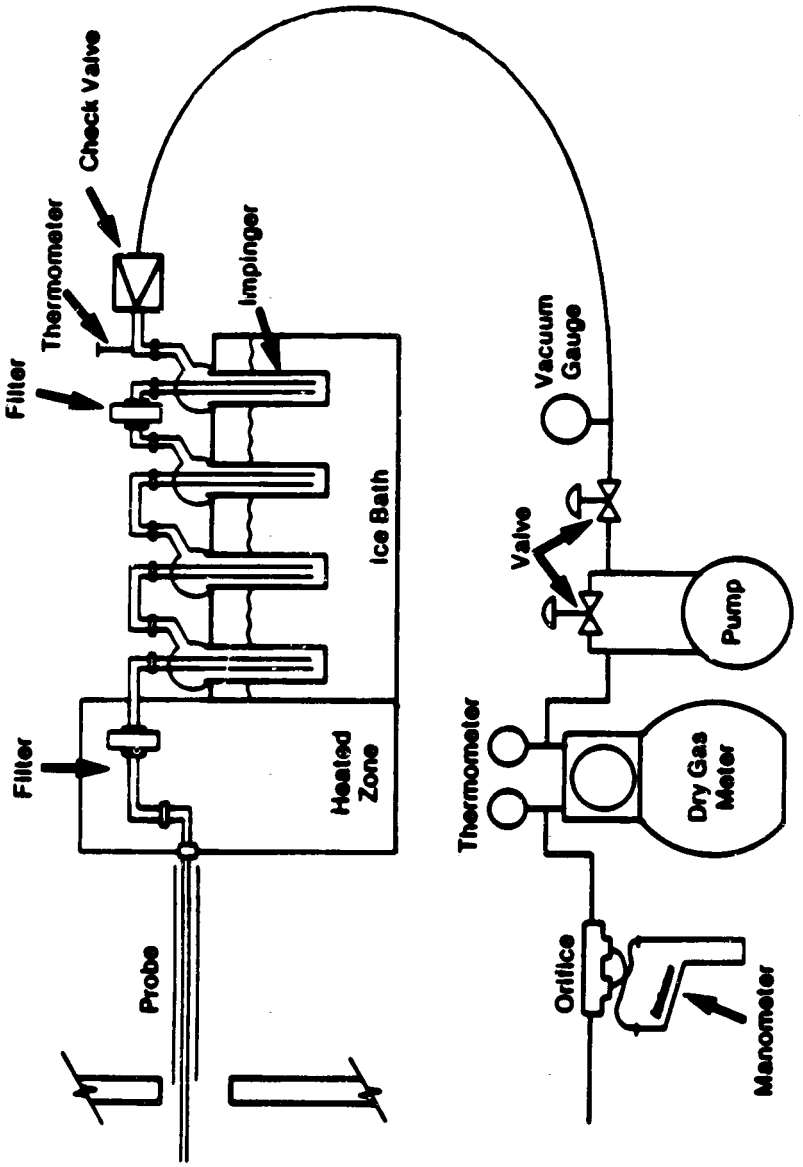

Figure 5H-1. Sampling train.

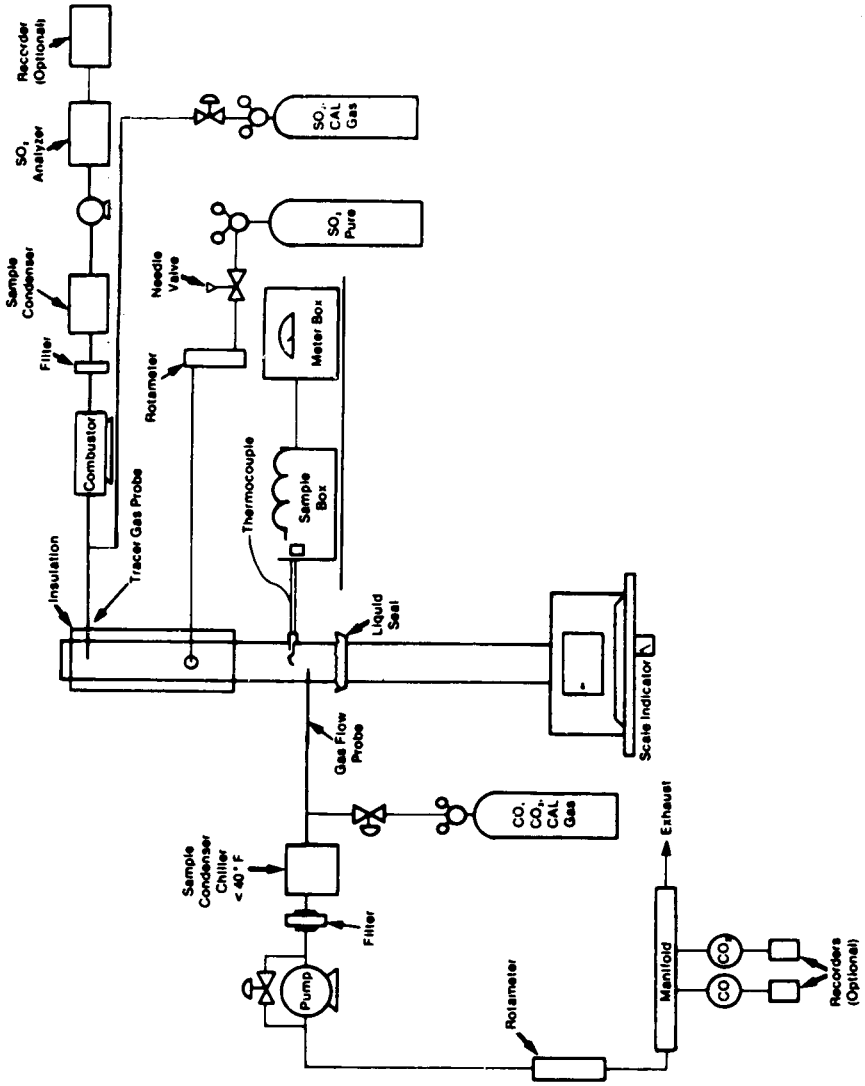

Figure 5H-2. Test system schematic for Method 5H.

Stove _____
Test Method _____
Operator _____
Date _____
Run No _____
Start Time _____
Stop Time _____
Sample Box No. _____
Meter Box No. _____
Meter $\Delta H_@$ (optional) _____
C Factor _____

Pitot tube coefficient, Cp _____
Room temperature, °C, (°F) _____
Barometric pressure mb (in. Hg) _____
Measured or assumed moisture, % _____
Nozzle identification No. m) _____
Average calibrated nozzle diameter, mm (in.) _____
Final leak rate, m^3/min, (cfm) _____
Probe liner material _____
Draft or static pressure, mm H_2O (in. H_2O) _____
Filter Nos. _____

Clock time	Sampling time (θ) min.	Vacuum mm Hg (in. Hg)	Flue temperature (T_s) °C (°F)	Flow in Flue m^3/min (ft^3/min)	Volume sampled in period m^3 (ft^3)	Gas sample volume m^3 (ft^3)	Gas sample temperature at dry gas meter °C (°F)	Gas sample temperature at dry gas meter °C (°F)	Front filter holder temperature °C (°F)	Temperature of gas leaving dryer or last impinger °C (°F)
Total							Avg	Avg		
Average							Avg			

Figure 5H-3. Data sheet.

Stove _____
Date _____
Run No. _____
Filter Nos. _____
Amount liquid lost during transport (ml) _____
Acetone blank volume, ml _____
Acetone wash volume, ml _____
Acetone blank concentration, mg/ml _____
Acetone wash blank, mg _____

Dichloromethane blank volume, ml _____
Dichloromethane wash volume, ml _____
Dichloromethane blank concentration, mg/ml _____
Dichloromethane wash blank, mg _____
Water blank volume, ml _____
Water wash volume, ml _____
Water blank concentration, mg/ml _____
Water wash blank, mg _____

Container number	Weight of particulate collected, mg		
	Final weight	Tare weight	Weight gain
1 _____			
2 _____			
3 _____			
4 _____			
5 _____			
Total _____			
Less acetone blank _____			
Less dichloromethane blank _____			
Less water blank _____			
Weight of particulate matter _____			

	Volume of liquid water collected	
	Impinger volume, ml	Silica gel weight, g
Final _____		
Initial _____		
Liquid collected _____		
Total volume collected _____		g* ml

*Convert weight of water to volume by dividing total weight increase by density of water (1 g/ml).

$$\frac{\text{Increase, g}}{(1\ \text{g/ml})} = \text{Volume water, ml}$$

Figure 5H-4. Analysis data sheet.

METHOD 5I—DETERMINATION OF LOW LEVEL PARTICULATE MATTER EMISSIONS FROM STATIONARY SOURCES

NOTE: This method does not include all of the specifications (*e.g.*, equipment and supplies) and procedures (*e.g.*, sampling and analytical) essential to its performance. Certain information is contained in other EPA procedures found in this part. Therefore, to obtain reliable results, persons using this method should have experience with and a thorough knowledge of the following Methods: Methods 1, 2, 3, 4 and 5.

1. Scope and Application.

1.1 Analyte. Particulate matter (PM). No CAS number assigned.

1.2 Applicability. This method is applicable for the determination of low level particulate matter (PM) emissions from stationary sources. The method is most effective for total PM catches of 50 mg or less. This method was initially developed for performing correlation of manual PM measurements to PM continuous emission monitoring systems (CEMS), however it is also useful for other low particulate concentration applications.

1.3 Data Quality Objectives. Adherence to the requirements of this method will enhance the quality of the data obtained from air pollutant sampling methods. Method 5I requires the use of paired trains. Acceptance criteria for the identification of data quality outliers from the paired trains are provided in Section 12.2 of this Method.

2. Summary of Method.

2.1. Description. The system setup and operation is essentially identical to Method 5. Particulate is withdrawn isokinetically from the source and collected on a 47 mm glass fiber filter maintained at a temperature of 120 ± 14°C (248 ± 25°F). The PM mass is determined by gravimetric analysis after the removal of uncombined water. Specific measures in this procedure designed to improve system performance at low particulate levels include:

1. Improved sample handling procedures
2 Light weight sample filter assembly
3. Use of low residue grade acetone

Accuracy is improved through the minimization of systemic errors associated with sample handling and weighing procedures. High purity reagents, all glass, grease free, sample train components, and light weight filter assemblies and beakers, each contribute to the overall objective of improved precision and accuracy at low particulate concentrations.

2.2 Paired Trains. This method must be performed using a paired train configuration. These trains may be operated as co-located trains (to trains operating collecting from one port) or as simultaneous trains (separate trains operating from different ports at the same time). Procedures for calculating precision of the paired trains are provided in Section 12.

2.3 Detection Limit. a. Typical detection limit for manual particulate testing is 0.5 mg. This mass is also cited as the accepted weight variability limit in determination of ''constant weight'' as cited in Section 8.1.2 of this Method. EPA has performed studies to provide guidance on minimum PM catch. The minimum detection limit (MDL) is the minimum concentration or amount of an analyte that can be determined with a specified degree of confidence to be different from zero. We have defined the minimum or target catch as a concentration or amount sufficiently larger than the MDL to ensure that the results are reliable and repeatable. The particulate matter catch is the product of the average particulate matter concentration on a mass per volume basis and the volume of gas collected by the sample train. The tester can generally control the volume of gas collected by increasing the sampling time or to a lesser extent by increasing the rate at which sample is collected. If the tester has a reasonable estimate of the PM concentration from the source, the tester can ensure that the target catch is collected by sampling the appropriate gas volume.

b. However, if the source has a very low particulate matter concentration in the stack, the volume of gas sampled may need to be very large which leads to unacceptably long sampling times. When determining compliance with an emission limit, EPA guidance has been that the tester does not always have to collect the target catch. Instead, we have suggested that the tester sample enough stack gas, that if the source were exactly at the level of the emission standard, the sample catch would equal the target catch. Thus, if at the end of the test the catch were smaller than the target, we could still conclude that the source is in compliance though we might not know the exact emission level. This volume of gas becomes a target volume that can be translated into a target sampling time by assuming an average sampling rate. Because the MDL forms the basis for our guidance on target sampling times, EPA has conducted a systematic laboratory study to define what is the MDL for Method 5 and determined the Method to have a calculated practical quantitation limit (PQL) of 3 mg of PM and an MDL of 1 mg.

c. Based on these results, the EPA has concluded that for PM testing, the target catch must be no less than 3 mg. Those sample catches between 1 mg and 3 mg are between the detection limit and the limit of quantitation. If a tester uses the target catch to estimate a target sampling time that results in sample catches that are less than 3 mg,

you should not automatically reject the results. If the tester calculated the target sampling time as described above by assuming that the source was at the level of the emission limit, the results would still be valid for determining that the source was in compliance. For purposes other than determining compliance, results should be divided into two categories—those that fall between 3 mg and 1 mg and those that are below 1 mg. A sample catch between 1 and 3 mg may be used for such purposes as calculating emission rates with the understanding that the resulting emission rates can have a high degree of uncertainty. Results of less than 1 mg should not be used for calculating emission rates or pollutant concentrations.

d. When collecting small catches such as 3 mg, bias becomes an important issue. Source testers must use extreme caution to reach the PQL of 3 mg by assuring that sampling probes are very clean (perhaps confirmed by low blank weights) before use in the field. They should also use low tare weight sample containers, and establish a well-controlled balance room to weigh the samples.

3. Definitions.

3.1 *Light Weight Filter Housing.* A smaller housing that allows the entire filtering system to be weighed before and after sample collection. (See. 6.1.3)

3.2 *Paired Train.* Sample systems trains may be operated as co-located trains (two sample probes attached to each other in the same port) or as simultaneous trains (two separate trains operating from different ports at the same time).

4. Interferences.

a. There are numerous potential interferents that may be encountered during performance of Method 5I sampling and analyses. This Method should be considered more sensitive to the normal interferents typically encountered during particulate testing because of the low level concentrations of the flue gas stream being sampled.

b. Care must be taken to minimize field contamination, especially to the filter housing since the entire unit is weighed (not just the filter media). Care must also be taken to ensure that no sample is lost during the sampling process (such as during port changes, removal of the filter assemblies from the probes, etc.).

c. Balance room conditions are a source of concern for analysis of the low level samples. Relative humidity, ambient temperatures variations, air draft, vibrations and even barometric pressure can affect consistent reproducible measurements of the sample media. Ideally, the same analyst who performs the tare weights should perform the final weights to minimize the effects of procedural differences specific to the analysts.

d. Attention must also be provided to weighing artifacts caused by electrostatic charges which may have to be discharged or neutralized prior to sample analysis. Static charge can affect consistent and reliable gravimetric readings in low humidity environments. Method 5I recommends a relative humidity of less than 50 percent in the weighing room environment used for sample analyses. However, lower humidity may be encountered or required to address sample precision problems. Low humidity conditions can increase the effects of static charge.

e. Other interferences associated with typical Method 5 testing (sulfates, acid gases, etc.) are also applicable to Method 5I.

5. Safety.

Disclaimer. This method may involve hazardous materials, operations, and equipment. This test method may not address all of the safety concerns associated with its use. It is the responsibility of the user to establish appropriate safety and health practices and to determine the applicability and observe all regulatory limitations before using this method.

6. Equipment and Supplies.

6.1 Sample Collection Equipment and Supplies. The sample train is nearly identical in configuration to the train depicted in Figure 5–1 of Method 5. The primary difference in the sample trains is the lightweight Method 5I filter assembly that attaches directly to the exit to the probe. Other exceptions and additions specific to Method 5I include:

6.1.1 Probe Nozzle. Same as Method 5, with the exception that it must be constructed of borosilicate or quartz glass tubing.

6.1.2 Probe Liner. Same as Method 5, with the exception that it must be constructed of borosilicate or quartz glass tubing.

6.1.3 Filter Holder. The filter holder is constructed of borosilicate or quartz glass front cover designed to hold a 47-mm glass fiber filter, with a wafer thin stainless steel (SS) filter support, a silicone rubber or Viton O-ring, and Teflon tape seal. This holder design will provide a positive seal against leakage from the outside or around the filter. The filter holder assembly fits into a SS filter holder and attaches directly to the outlet of the probe. The tare weight of the filter, borosilicate or quartz glass holder, SS filter support, O-ring and Teflon tape seal generally will not exceed approximately 35 grams. The filter holder is designed to use a 47-mm glass fiber filter meeting the quality criteria in of Method 5. These units are commercially available from several source testing equipment vendors. Once the filter holder has been assembled, desiccated and tared,

protect it from external sources of contamination by covering the front socket with a ground glass plug. Secure the plug with an impinger clamp or other item that will ensure a leak-free fitting.

6.2 Sample Recovery Equipment and Supplies. Same as Method 5, with the following exceptions:

6.2.1 Probe-Liner and Probe-Nozzle Brushes. Teflon or nylon bristle brushes with stainless steel wire handles, should be used to clean the probe. The probe brush must have extensions (at least as long as the probe) of Teflon, nylon or similarly inert material. The brushes must be properly sized and shaped for brushing out the probe liner and nozzle.

6.2.2 Wash Bottles. Two Teflon wash bottles are recommended however, polyethylene wash bottles may be used at the option of the tester. Acetone should not be stored in polyethylene bottles for longer than one month.

6.2.3 Filter Assembly Transport. A system should be employed to minimize contamination of the filter assemblies during transport to and from the field test location. A carrying case or packet with clean compartments of sufficient size to accommodate each filter assembly can be used. This system should have an air tight seal to further minimize contamination during transport to and from the field.

6.3 Analysis Equipment and Supplies. Same as Method 5, with the following exception:

6.3.1 Lightweight Beaker Liner. Teflon or other lightweight beaker liners are used for the analysis of the probe and nozzle rinses. These light weight liners are used in place of the borosilicate glass beakers typically used for the Method 5 weighings in order to improve sample analytical precision.

6.3.2 Anti-static Treatment. Commercially available gaseous anti-static rinses are recommended for low humidity situations that contribute to static charge problems.

7. Reagents and Standards.

7.1 Sampling Reagents. The reagents used in sampling are the same as Method 5 with the following exceptions:

7.1.1 Filters. The quality specifications for the filters are identical to those cited for Method 5. The only difference is the filter diameter of 47 millimeters.

7.1.2 Stopcock Grease. Stopcock grease cannot be used with this sampling train. We recommend that the sampling train be assembled with glass joints containing O-ring seals or screw-on connectors, or similar.

7.1.3 Acetone. Low residue type acetone, ≤0.001 percent residue, purchased in glass bottles is used for the recovery of particulate matter from the probe and nozzle. Acetone from metal containers generally has a high residue blank and should not be used. Sometimes, suppliers transfer acetone to glass bottles from metal containers; thus, acetone blanks must be run prior to field use and only acetone with low blank values (≤0.001 percent residue, as specified by the manufacturer) must be used. Acetone blank correction is not allowed for this method; therefore, it is critical that high purity reagents be purchased and verified prior to use.

7.1.4 Gloves. Disposable, powder-free, latex surgical gloves, or their equivalent are used at all times when handling the filter housings or performing sample recovery.

7.2 Standards. There are no applicable standards or audit samples commercially available for Method 5I analyses.

8. Sample Collection, Preservation, Storage, and Transport.

8.1 Pretest Preparation. Same as Method 5 with several exceptions specific to filter assembly and weighing.

8.1.1 Filter Assembly. Uniquely identify each filter support before loading filters into the holder assembly. This can be done with an engraving tool or a permanent marker. Use powder free latex surgical gloves whenever handling the filter holder assemblies. Place the O-ring on the back of the filter housing in the O-ring groove. Place a 47 mm glass fiber filter on the O-ring with the face down. Place a stainless steel filter holder against the back of the filter. Carefully wrap 5 mm (¼ inch) wide Teflon'' tape one timearound the outside of the filter holder overlapping the stainless steel filter support by approximately 2.5 mm (⅛ inch). Gently brush the Teflon tape down on the back of the stainless steel filter support. Store the filter assemblies in their transport case until time for weighing or field use.

8.1.2 Filter Weighing Procedures. a. Desiccate the entire filter holder assemblies at 20 ± 5.6°C (68 ± 10°F) and ambient pressure for at least 24 hours. Weigh at intervals of at least 6 hours to a constant weight, *i.e.,* 0.5 mg change from previous weighing. Record the results to the nearest 0.1 mg. During each weighing, the filter holder assemblies must not be exposed to the laboratory atmosphere for a period greater than 2 minutes and a relative humidity above 50 percent. Lower relative humidity may be required in order to improve analytical precision. However, low humidity conditions increase static charge to the sample media.

b. Alternatively (unless otherwise specified by the Administrator), the filters holder assemblies may be oven dried at 105°C (220°F) for a minimum of 2 hours, desiccated for 2 hours, and weighed. The procedure used for the tare weigh must also be used for the final weight determination.

c. Experience has shown that weighing uncertainties are not only related to the balance performance but to the entire weighing

procedure. Therefore, before performing any measurement, establish and follow standard operating procedures, taking into account the sampling equipment and filters to be used.

8.2 Preliminary Determinations. Select the sampling site, traverse points, probe nozzle, and probe length as specified in Method 5.

8.3 Preparation of Sampling Train. Same as Method 5, Section 8.3, with the following exception: During preparation and assembly of the sampling train, keep all openings where contamination can occur covered until justbefore assembly or until sampling is about to begin. Using gloves, place a labeled (identified) and weighed filter holder assembly into the stainless steel holder. Then place this whole unit in the Method 5 hot box, and attach it to the probe. Do not use stopcock grease.

8.4 Leak-Check Procedures. Same as Method 5.

8.5 Sampling Train Operation.

8.5.1. Operation. Operate the sampling train in a manner consistent with those described in Methods 1, 2, 4 and 5 in terms of the number of sample points and minimum time per point. The sample rate and total gas volume should be adjusted based on estimated grain loading of the source being characterized. The total sampling time must be a function of the estimated mass of particulate to be collected for the run. Targeted mass to be collected in a typical Method 5I sample train should be on the order of 10 to 20 mg. Method 5I is most appropriate for total collected masses of less than 50 milligrams, however, there is not an exact particulate loading cutoff, and it is likely that some runs may exceed 50 mg. Exceeding 50 mg (or less than 10 mg) for the sample mass does not necessarily justify invalidating a sample run if all other Method criteria are met.

8.5.2 Paired Train. This Method requires PM samples be collected with paired trains.

8.5.2.1 It is important that the systems be operated truly simultaneously. This implies that both sample systems start and stop at the same times. This also means that if one sample system is stopped during the run, the other sample systems must also be stopped until the cause has been corrected.

8.5.2.2 Care should be taken to maintain the filter box temperature of the paired trains as close as possible to the Method required temperature of 120 ± 14°C (248 ± 25°F). If separate ovens are being used for simultaneously operated trains, it is recommended that the oven temperature of each train be maintained within ± 14°C (± 25°F) of each other.

8.5.2.3 The nozzles for paired trains need not be identically sized.

8.5.2.4 Co-located sample nozzles must be within the same plane perpendicular to the gas flow. Co-located nozzles and pitot assemblies should be within a 6.0 cm × 6.0 cm square (as cited for a quadruple train in Reference Method 301).

8.5.3 Duplicate gas samples for molecular weight determination need not be collected.

8.6 Sample Recovery. Same as Method 5 with several exceptions specific to the filter housing.

8.6.1 Before moving the sampling train to the cleanup site, remove the probe from the train and seal the nozzle inlet and outlet of the probe. Be careful not to lose any condensate that might be present. Cap the filter inlet using a standard ground glass plug and secure the cap with an impinger clamp. Remove the umbilical cord from the last impinger and cap the impinger. If a flexible line is used between the first impinger condenser and the filter holder, disconnect the line at the filter holder and let any condensed water or liquid drain into the impingers or condenser.

8.6.2 Transfer the probe and filter-impinger assembly to the cleanup area. This area must be clean and protected from the wind so that the possibility of losing any of the sample will be minimized.

8.6.3 Inspect the train prior to and during disassembly and note any abnormal conditions such as particulate color, filter loading, impinger liquid color, etc.

8.6.4 Container No. 1, Filter Assembly. Carefully remove the cooled filter holder assembly from the Method 5 hot box and place it in the transport case. Use a pair of clean gloves to handle the filter holder assembly.

8.6.5 Container No. 2, Probe Nozzle and Probe Liner Rinse. Rinse the probe and nozzle components with acetone. Be certain that the probe and nozzle brushes have been thoroughly rinsed prior to use as they can be a source of contamination.

8.6.6 All Other Train Components. (Impingers) Same as Method 5.

8.7 Sample Storage and Transport. Whenever possible, containers should be shipped in such a way that they remain upright at all times. All appropriate dangerous goods shipping requirements must be observed since acetone is a flammable liquid.

9. Quality Control.

9.1 Miscellaneous Field Quality Control Measures.

9.1.1 A quality control (QC) check of the volume metering system at the field site is suggested before collecting the sample using the procedures in Method 5, Section 4.4.1.

9.1.2 All other quality control checks outlined in Methods 1, 2, 4 and 5 also apply to Method 5I. This includes procedures such as leak-checks, equipment calibration checks, and independent checks of field data sheets for reasonableness and completeness.

9.2 Quality Control Samples.

9.2.1 Required QC Sample. A laboratory reagent blank must be collected and analyzed for each lot of acetone used for a field program to confirm that it is of suitable purity. The particulate samples cannot be blank corrected.

9.2.2 Recommended QC Samples. These samples may be collected and archived for future analyses.

9.2.2.1 A field reagent blank is a recommended QC sample collected from a portion of the acetone used for cleanup of the probe and nozzle. Take 100 ml of this acetone directly from the wash bottle being used and place it in a glass sample container labeled ''field acetone reagent blank.'' At least one field reagent blank is recommended for every five runs completed. The field reagent blank samples demonstrate the purity of the acetone was maintained throughout the program.

9.2.2.2 A field bias blank train is a recommended QC sample. This sample is collected by recovering a probe and filter assembly that has been assembled, taken to the sample location, leak checked, heated, allowed to sit at the sample location for a similar duration of time as a regular sample run, leak-checked again, and then recovered in the same manner as a regular sample. Field bias blanks are not a Method requirement, however, they are recommended and are very useful for identifying sources of contamination in emission testing samples. Field bias blank train results greater than 5 times the method detection limit may be considered problematic.

10. Calibration and Standardization Same as Method 5, Section 5.

11. Analytical Procedures.

11.1 Analysis. Same as Method 5, Sections 11.1—11.2.4, with the following exceptions:

11.1.1 Container No. 1. Same as Method 5, Section 11.2.1, with the following exception: Use disposable gloves to remove each of the filter holder assemblies from the desiccator, transport container, or sample oven (after appropriate cooling).

11.1.2 Container No. 2. Same as Method 5, Section 11.2.2, with the following exception: It is recommended that the contents of Container No. 2 be transferred to a 250 ml beaker with a Teflon liner or similar container that has a minimal tare weight before bringing to dryness.

12. Data Analysis and Calculations.

12.1 Particulate Emissions. The analytical results cannot be blank corrected for residual acetone found in any of the blanks. All other sample calculations are identical to Method 5.

12.2 Paired Trains Outliers. a. Outliers are identified through the determination of precision and any systemic bias of the paired trains. Data that do not meet this criteria should be flagged as a data quality problem. The primary reason for performing dual train sampling is to generate information to quantify the precision of the Reference Method data. The relative standard deviation (RSD) of paired data is the parameter used to quantify data precision. RSD for two simultaneously gathered data points is determined according to:

$$RSD = 100\% * \left|\left(C_a - C_b\right)\right| / \left(C_a + C_b\right)$$

where, Ca and Cb are concentration values determined from trains A and B respectively. For RSD calculation, the concentration units are unimportant so long as they are consistent.

b. A minimum precision criteria for Reference Method PM data is that RSD for any data pair must be less than 10% as long as the mean PM concentration is greater than 10 mg/unit volume. If the mean PM concentration is less than 10 mg/unit volume higher RSD values are acceptable. At mean PM concentration of 1 mg/unit volume acceptable RSD for paired trains is 25%. Between 1 and 10 mg/unit volume acceptable RSD criteria should be linearly scaled from 25% to 10%. Pairs of manual method data exceeding these RSD criteria should be eliminated from the data set used to develop a PM CEMS correlation or to assess RCA.

13. Method Performance. [Reserved]

14. Pollution Prevention. [Reserved]

15. Waste Management. [Reserved]

16. Alternative Procedures. Same as Method 5.

17. Bibliography. Same as Method 5.

18. Tables, Diagrams, Flowcharts and Validation Data. Figure 5I–1 is a schematic of the sample train.

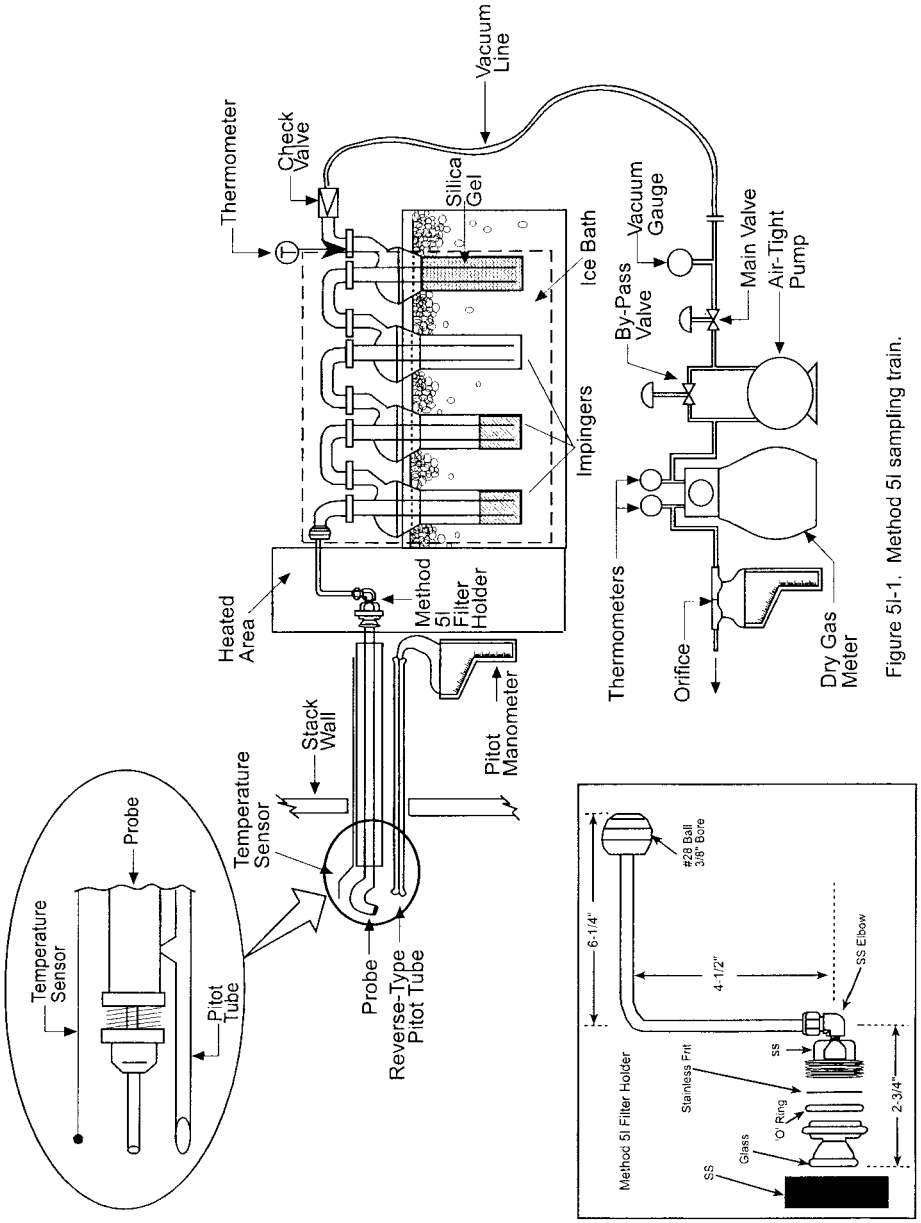

Figure 5I-1. Method 5I sampling train.

METHOD 6—DETERMINATION OF SULFUR DIOXIDE EMISSIONS FROM STATIONARY SOURCES

1. *Principle and Applicability*

1.1 Principle. A gas sample is extracted from the sampling point in the stack. The sulfuric acid mist (including sulfur trioxide) and the sulfur dioxide are separated. The sulfur dioxide fraction is measured by the barium-thorin titration method.

1.2 Applicability. This method is applicable for the determination of sulfur dioxide

emissions from stationary sources. The minimum detectable limit of the method has been determined to be 3.4 milligrams (mg) of SO_2/m^3 (2.12×10^{-7} lb/ft^3). Although no upper limit has been established, tests have shown that concentrations as high as 80,000 mg/m^3 of SO_2 can be collected efficiently in two midget impingers, each containing 15 milliliters of 3 percent hydrogen peroxide, at a rate of 1.0 lpm for 20 minutes. Based on theoretical calculations, the upper concentration limit in a 20-liter sample is about 93,300 mg/m^3.

Possible interferents are free ammonia, water-soluble cations, and fluorides. The cations and fluorides are removed by glass wool filters and an isopropanol bubbler, and hence do not affect the SO_2 analysis. When samples are being taken from a gas stream with high concentrations of very fine metallic fumes (such as in inlets to control devices), a high-efficiency glass fiber filter must be used in place of the glass wool plug (i.e., the one in the probe) to remove the cation interferents.

Free ammonia interferes by reacting with SO_2 to form particulate sulfite and by reacting with the indicator. If free ammonia is present (this can be determined by knowledge of the process and the presence of white particulate matter in the probe and isopropanol bubbler), the alternative procedures in Section 7.2 shall be used.

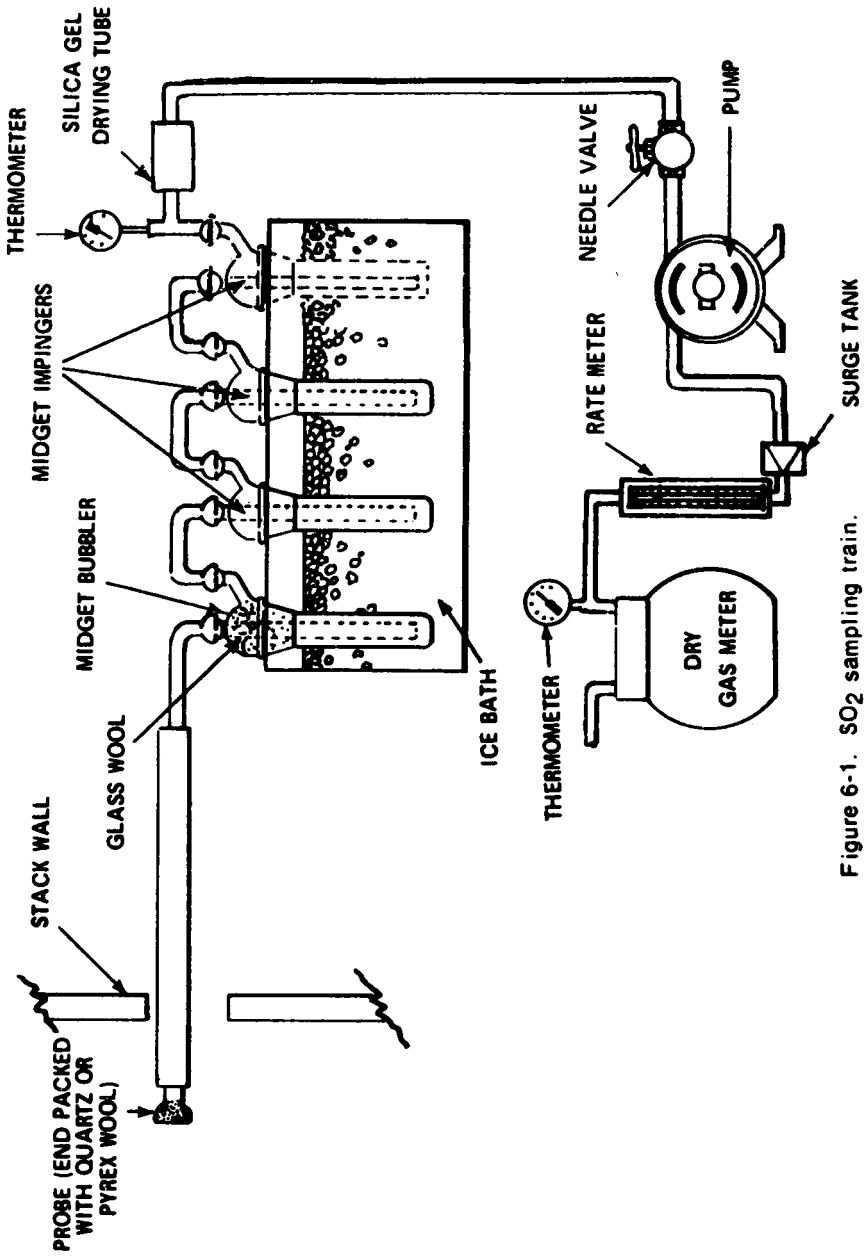

Figure 6-1. SO_2 sampling train.

2. *Apparatus*

2.1 Sampling. The sampling train is shown in Figure 6–1, and component parts are discussed below. The tester has the option of substituting sampling equipment described in Method 8 in place of the midget impinger equipment of Method 6. However,

the Method 8 train must be modified to include a heated filter between the probe and isopropanol impinger, and the operation of the sampling train and sample analysis must be at the flow rates and solution volumes defined in Method 8.

The tester also has the option of determining SO_2 simultaneously with particulate matter and moisture determinations by (1) replacing the water in a Method 5 impinger system with 3 percent peroxide solution, or (2) by replacing the Method 5 water impinger system with a Method 8 isopropanol-filter-peroxide system. The analysis for SO_2 must be consistent with the procedure in Method 8.

2.1.1 Probe. Borosilicate glass, or stainless steel (other materials of construction may be used, subject to the approval of the Administrator), approximately 6-mm inside diameter, with a heating system to prevent water condensation and a filter (either in-stack or heated out-stack) to remove particulate matter, including sulfuric acid mist. A plug of glass wool is a satisfactory filter.

2.1.2 Bubbler and Impingers. One midget bubbler, with medium-coarse glass frit and borosilicate or quartz glass wool packed in top (see Figure 6–1) to prevent sulfuric acid mist carryover, and three 30-ml midget impingers. The bubbler and midget impingers must be connected in series with leak-free glass connectors. silicone grease may be used, if necessary, to prevent leakage.

At the option of the tester, a midget impinger may be used in place of the midget bubbler.

Other collection absorbers and flow rates may be used, but are subject to the approval of the Administrator. Also, collection efficiency must be shown to be at least 99 percent for each test run and must be documented in the report. If the efficiency is found to be acceptable after a series of three tests, further documentation is not required. To conduct the efficiency test, an extra absorber must be added and analyzed separately. This extra absorber must not contain more than 1 percent of the total SO_2.

2.1.3 Glass Wool. Borosilicate or quartz.

2.1.4 Stopcock Grease. Acetone-insoluble, heatstable silicone grease may be used, if necessary.

2.1.5 Temperature Gauge. Dial thermometer, or equivalent, to measure temperature of gas leaving impinger train to within 1 °C (2 °F.)

2.1.6 Drying Tube. Tube packed with 6- to 16-mesh indicating type silica gel, or equivalent, to dry the gas sample and to protect the meter and pump. If the silica gel has been used previously, dry at 175 °C (350 °F) for 2 hours. New silica gel may be used as received. Alternatively, other types of desiccants (equivalent or better) may be used, subject to approval of the Administrator.

2.1.7 Valve. Needle valve, to regulate sample gas flow rate.

2.1.8 Pump. Leak-free diaphragm pump, or equivalent, to pull gas through the train. Install a small surge tank between the pump and rate meter to eliminate the pulsation effect of the diaphragm pump on the rotameter.

2.1.9 Rate Meter. Rotameter, or equivalent, capable of measuring flow rate to within 2 percent of the selected flow rate of about 1000 cc/min.

2.1.10 Volume Meter. Dry gas meter, sufficiently accurate to measure the sample volume within 2 percent, calibrated at the selected flow rate and conditions actually encountered during sampling, and equipped with a temperature gauge (dial thermometer, or equivalent) capable of measuring temperature to within 3 °C (5.4 °F).

2.1.11 Barometer. Mercury, aneroid, or other barometer capable of measuring atmospheric pressure to within 2.5 mm Hg (0.1 in. Hg). In many cases, the barometric reading may be obtained from a nearby National Weather Service station, in which case the station value (which is the absolute barometric pressure) shall be requested and an adjustment for elevation differences between the weather station and sampling point shall be applied at a rate of minus 2.5 mm Hg (0.1 in. Hg) per 30 m (100 ft) elevation increase or vice versa for elevation decrease.

2.1.12 Vacuum Gauge and Rotameter. At least 760 mm Hg (30 in. Hg) gauge and 0–40 cc/min rotameter, to be used for leak check of the sampling train.

2.2 Sample Recovery.

2.2.1 Wash Bottles. Polyethylene or glass, 500 ml, two.

2.2.2 Storage Bottles. Polyethylene, 100 ml, to store impinger samples (one per sample).

2.3 Analysis.

2.3.1 Pipettes. Volumetric type, 5-ml, 20-ml (one per sample), and 25-ml sizes.

2.3.2 Volumetric Flasks. 100-ml size (one per sample) and 1000 ml size.

2.3.3 Burettes. 5- and 50-ml sizes.

2.3.4 Erlenmeyer Flasks. 250 ml-size (one for each sample, blank, and standard).

2.3.5 Dropping Bottle. 125-ml size, to add indicator.

2.3.6 Graduated Cylinder. 100-ml size.

2.3.7 Spectrophotometer. To measure absorbance at 352 nanometers.

3. *Reagents*

Unless otherwise indicated, all reagents must conform to the specifications established by the Committee on Analytical Reagents of the American Chemical Society. Where such specifications are not available, use the best available grade.

3.1 Sampling.

3.1.1 Water. Deionized distilled to conform to ASTM Specification D1193–77, Type 3 (incorporated by reference—see §60.17). At the option of the analyst, the $KMnO_4$ test for oxidizable organic matter may be omitted when high concentrations of organic matter are not expected to be present. Unless otherwise specified, this water shall be used throughout this method.

3.1.2 Isopropanol, 80 percent. Mix 80 ml of isopropanol with 20 ml of water. Check each lot of isopropanol for peroxide impurities as follows: shake 10 ml of isopropanol with 10 ml of freshly prepared 10 percent potassium iodide solution. Prepare a blank by similarly treating 10 ml of water. After 1 minute, read the absorbance at 352 nanometers on a spectrophotometer. If absorbance exceeds 0.1, reject alcohol for use.

Peroxides may be removed from isopropanol by redistilling or by passage through a column of activated alumina; however, reagent grade isopropanol with suitably low peroxide levels may be obtained from commercial sources. Rejection of contaminated lots may, therefore, be a more efficient procedure.

3.1.3 Hydrogen Peroxide, 3 Percent. Dilute 30 percent hydrogen peroxide 1:9 (v/v) with water (30 ml is needed per sample). Prepare fresh daily.

3.1.4 Potassium Iodide Solution, 10 Percent. Dissolve 10.0 grams KI in water and dilute to 100 ml. Prepare when needed.

3.2 Sample Recovery.

3.2.1 Water. Same as in Section 3.1.1.

3.2.2 Isopropanol, 80 Percent. Mix 80 ml of isopropanol with 20 ml of water.

3.3 Analysis.

3.3.1 Water. Same as in Section 3.1.1.

3.3.2 Isopropanol, 100 Percent.

3.3.3 Thorin Indicator. 1-(o-arsonophenylazo)-2-naphthol-3,6-disulfonic acid, disodium salt, or equivalent. Dissolve 0.20 g in 100 ml of water.

3.3.4 Barium Perchlorate Solution, 0.0100 N. Dissolve 1.95 g of barium perchlorate trihydrate $[Ba(ClO_4)_2 \bullet 3H_2O]$ in 200 ml water and dilute to 1 liter with isopropanol. Alternatively, 1.22 g of $[BaCl_2 \bullet 2H_2O]$ may be used instead of the perchlorate. Standardize as in Section 5.5.

3.3.5 Sulfuric Acid Standard, 0.0100 N. Purchase or standardize to ±0.0002 N against 0.0100 N NaOH which has previously been standardized against potassium acid phthalate (primary standard grade).

3.3.6 Quality Assurance Audit Samples. Sulfate samples in glass vials prepared by EPA's Environmental Monitoring Systems Laboratory, Quality Assurance Division, Source Branch, Mail Drop 77A, Research Triangle Park, North Carolina 27711. Each set will consist of two vials having solutions of unknown concentrations. Only when making compliance determinations, obtain an audit sample set from the Quality Assurance Management office at each EPA regional Office or the responsible enforcement agency. (NOTE: The tester should notify the quality assurance office or the responsible enforcement agency at least 30 days prior to the test date to allow sufficient time for sample delivery.)

3.3.7 Hydrochloric Acid (HCl) Solution, 0.1 N (for use in Section 7.2). Carefully pipette 8.6 ml of concentrated HCl into a 1-liter volumetric flask containing water. Dilute to volume with mixing.

4. *Procedure*

4.1 Sampling.

4.1.1 Preparation of Collection Train. Measure 15 ml of 80 percent isopropanol into the midget bubbler and 15 ml of 3 percent hydrogen peroxide into each of the first two midget impingers. Leave the final midget impinger dry. Assemble the train as shown in Figure 6–1. Adjust probe heater to a temperature sufficient to prevent water condensation. Place crushed ice and water around the impingers.

4.1.2 Leak-Check Procedure. A leak check prior to the sampling run is optional; however, a leak check after the sampling run is mandatory. The leak-check procedure is as follows:

Temporarily attach a suitable (e.g., 0–40 cc/min) rotameter to the outlet of the dry gas meter and place a vacuum gauge at or near the probe inlet. Plug the probe inlet, pull a vaccum of at least 250 mm Hg (10 in. Hg), and note the flow rate as indicated by the rotameter. A leakage rate not in excess of 2 percent of the average sampling rate is acceptable.

NOTE: Carefully release the probe inlet plug before turning off the pump.

It is suggested (not mandatory) that the pump be leak-checked separately, either prior to or after the sampling run. If done prior to the sampling run, the pump leak-check shall precede the leak check of the sampling train described immediately above; if done after the sampling run, the pump leak-check shall follow the train leak-check. To leak check the pump, proceed as follows: Disconnect the drying tube from the probe-impinger assembly. Place a vacuum gauge at the inlet to either the drying tube or the pump, pull a vacuum of 250 mm (10 in.) Hg, plug or pinch off the outlet of the flow meter and then turn off the pump. The vacuum should remain stable for at least 30 seconds.

Other leak-check procedures may be used, subject to the approval of the Adminstrator, U.S. Environmental Protection Agency.

4.1.3 Sample Collection. Record the initial dry gas meter reading and barometric pressure. To begin sampling, position the tip of the probe at the sampling point, connect the probe to the bubbler, and start the pump. Adjust the sample flow to a constant rate of approximately 1.0 liter/min as indicated by the

rotameter. Maintain this constant rate (±10 percent) during the entire sampling run. Take readings (dry gas meter, temperatures at dry gas meter and at impinger outlet, and rate meter) at least every 5 minutes. Add more ice during the run to keep the temperature of the gases leaving the last impinger at 20 °C (68 °F) or less. At the conclusion of each run, turn off the pump, remove probe from the stack, and record the final readings. Conduct a leak check as in Section 4.1.2 (This leak check is mandatory.) If a leak is found, void the test run, or use procedures acceptable to the Administrator to adjust the sample volume for the leakage. Drain the ice bath, and purge the remaining part of the train by drawing clean ambient air through the system for 15 minutes at the sampling rate.

Clean ambient air can be provided by passing air through a charcoal filter or through an extra midget impinger with 15 ml of 3 percent H_2O_2. The tester may opt to simply use ambient air, without purification.

4.2 Sample Recovery. Disconnect the impingers after purging. Discard the contents of the midget bubbler. Pour the contents of the midget impingers into a leak-free polyethylene bottle for shipment. Rinse the three midget impingers and the connecting tubes with water, and add the washings to the same storage container. Mark the fluid level. Seal and identify the sample container.

4.3 Sample Analysis. Note level of liquid in container, and confirm whether any sample was lost during shipment; note this on analytical data sheet. If a noticeable amount of leakage has occurred, either void the sample or use methods, subject to the approval of the Administrator, to correct the final results.

Transfer the contents of the storage container to a 100-ml volumetric flask and dilute to exactly 100 ml with water. Pipette a 20-ml aliquot of this solution into a 250-ml Erlenmeyer flask, add 80 ml of 100 percent isopropanol and two to four drops of thorin indicator, and titrate to a pink endpoint using 0.0100 N barium perchlorate. Repeat and average the titration volumes. Run a blank with each series of samples. Replicate titrations must agree within 1 percent or 0.2 ml, whichever is larger.

NOTE: Protect the 0.0100 N barium perchlorate solution from evaporation at all times.

4.4 Audit Sample Analysis. Concurrently analyze the two audit samples and a set of compliance samples (Section 4.3) in the same manner to evaluate the technique of the analyst and the standards preparation. (NOTE: It is recommended that known quality control samples be analyzed prior to the compliance and audit sample analysis to optimize the system accuracy and precision. One source of these samples is the Source Branch listed in Section 3.3.6.) The same analysts, analytical reagents, and analytical system shall be used both for compliance samples and the EPA audit samples; if this condition is met, auditing of subsequent compliance analyses for the same enforcement agency within 30 days is not required. An audit sample set may not be used to validate different sets of compliance samples under the jurisdiction of different enforcement agencies, unless prior arrangements are made with both enforcement agencies.

Calculate the concentrations in mg/dscm using the specified sample volume in the audit instructions. (NOTE: Indication of acceptable results may be obtained immediately by reporting the audit results in mg/dscm and compliance results in total mg SO_2/sample by telephone to the responsible enforcement agency.) Include the results of both audit samples, their identification numbers, and the analyst's name with the results of the compliance determination samples in appropriate reports to the EPA regional office or the appropriate enforcement agency. Include this information with subsequent compliance analyses for the same enforcement agency during the 30-day period.

The concentrations of the audit samples obtained by the analyst shall agree within 5 percent of the actual concentrations. If the 5-percent specification is not met, reanalyze the compliance samples and audit samples, and include initial and reanalysis values in the test report (see NOTE in first paragraph of this section).

Failure to meet the 5-percent specification may require retests until the audit problems are resolved. However, if the audit results do not affect the compliance or noncompliance status of the affected facility, the Administrator may waive the reanalysis requirement, further audits, or retests and accept the results of the compliance test. While steps are being taken to resolve audit analysis problems, the Administrator may also choose to use the data to determine the compliance or noncompliance status of the affected facility.

5. *Calibration*

5.1 Metering System.

5.1.1 Initial Calibration. Before its initial use in the field, first leak check the metering system (drying tube, needle valve, pump, rotameter, and dry gas meter) as follows: place a vacuum gauge at the inlet to the drying tube and pull a vaccum of 250 mm (10 in.) Hg; plug or pinch off the outlet of the flow meter, and then turn off the pump. The vaccum shall remain stable for at least 30 seconds. Carefully release the vaccum gauge before releasing the flow meter end.

Next, remove the drying tube and calibrate the metering system (at the sampling flow

rate specified by the method) as follows: connect an appropriately sized wet test meter (e.g., 1 liter per revolution) to the inlet of the drying tube. Make three independent calibration runs, using at least five revolutions of the dry gas meter per run. Calculate the calibration factor, Y (wet test meter calibration volume divided by the dry gas meter volume, both volumes adjusted to the same reference temperature and pressure), for each run, and average the results. If any Y value deviates by more than 2 percent from the average, the metering system is unacceptable for use. Otherwise, use the average as the calibration factor for subsequent test runs.

5.1.2 Post-Test Calibration Check. After each field test series, conduct a calibration check as in Section 5.1.1 above, except for the following variations: (a) the leak check is not to be conducted, (b) three, or more revolutions of the dry gas meter may be used, and (c) only two independent runs need be made. If the calibration factor does not deviate by more than 5 percent from the initial calibration factor (determined in Section 5.1.1), then the dry gas meter volumes obtained during the test series are acceptable. If the calibration factor deviates by more than 5 percent, recalibrate the metering system as in Section 5.1.1, and for the calculations, use the calibration factor (initial or recalibration) that yields the lower gas volume for each test run.

5.2 Thermometers. Calibrate against mercury-in-glass thermometers.

5.3 Rotameter. The rotameter need not be calibrated but should be cleaned and maintained according to the manufactuturer's instruction.

5.4 Barometer. Calibrate against a mercury barometer.

5.5 Barium Perchlorate Solution. Standardize the barium perchlorate solution against 25 ml of standard sulfuric acid to which 100 ml of 100 percent isopropanol has been added.

Run duplicate analyses. Calculate the normality using the average of a pair of duplicate analyses where the titrations agree within 1 percent or 0.2 ml, whichever is larger.

6. *Calculations*

Carry out calculations, retaining at least one extra decimal figure beyond that of the acquired data. Round off figures after final calculation.

6.1 Nomenclature.

C_{so2}=Concentration of sulfur dioxide, dry basis corrected to standard conditions, mg/dscm (lb/dscf).

N=Normality of barium perchlorate titrant, milliequivalents/ml.

P_{bar}=Barometric pressure at the exit orifice of the dry gas meter, mm Hg (in. Hg).

P_{std}=Standard absolute pressure, 760 mm Hg (29.92 in. Hg).

T_m=Average dry gas meter absolute temperature, °K (°R).

T_{std}=Standard absolute temperature, 293°K (528°R).

V_a=Volume of sample aliquot titrated, ml.

V_m=Dry gas volume as measured by the dry gas meter, dcm (dcf).

V_m**(std)**=Dry gas volume measured by the dry gas meter, corrected to standard conditions, dscm (dscf).

V_{soln}=Total volume of solution in which the sulfur dioxide sample is contained, 100 ml.

V_t=Volume of barium perchlorate titrant used for the sample, ml (average or replicate titrations).

V_{tb}=Volume of barium perchlorate titrant used for the blank, ml.

Y=Dry gas meter calibration factor.

32.03=Equivalent weight of sulfur dioxide.

6.2 Dry Sample Gas Volume, Corrected to Standard Conditions.

$$V_{m(std)} = V_m Y \left(\frac{T_{std}}{T_m}\right)\left(\frac{P_{bar}}{P_{std}}\right) = K_1 Y \frac{V_m P_{bar}}{T_m}$$

Equation 6-1

Where:

K_1=0.3858°K/mm Hg for metric units.
=17.64°R/in. Hg for English units.

6.3 Sulfur Dioxide Concentration.

$$C_{SO_2} = K_3 \frac{(V_t - V_{tb})\, N\left(\frac{V_{soln}}{V_a}\right)}{V_{m(std)}}$$

Equation 6-2

Where:

K_3=32.03 mg/meq. for metric units.
=7.061×10^{-5} lb/meq. for English units.

6.4 Relative Error (RE) for QA Audit Samples, Percent.

$$RE = \frac{C_d - C_a}{C_a}(100) \qquad \text{Eq. 6-3}$$

Where:

C_d=Determined audit sample concentration, mg/dscm.

C_a=Actual audit sample concentration, mg/dscm.

7. *Alternative Procedures*

7.1 Dry Gas Meter as a Calibration Standard. A dry gas meter may be used as a calibration standard for volume measurements in place of the wet test meter specified in Section 5.1, provided that it is calibrated initially and recalibrated periodically according to the same procedures outlined in Method 5, Section 7.1, with the following exception: (1) the dry gas meter is calibrated against a wet test meter having a capacity of

1 liter/rev or 3 liters/rev and having the capability of measuring volume to within ±1 percent; (2) the dry gas meter is calibrated at 1 liter/min (2 cfh); and (3) the meter box of the Method 6 sampling train is calibrated at the same flow rate.

7.2 Critical Orifices for Volume and Rate Measurements. A critical orifice may be used in place of the dry gas meter specified in Section 2.1.10, provided that it is selected, calibrated, and used as follows:

7.2.1 Preparation of Collection Train. Prepare the sampling train as shown in Figure 6–2. The rotameter and surge tank are optional but are recommended in order to detect changes in the flow rate.

NOTE: The critical orifices can be adapted to a Method 6 type sampling train as follows: Insert sleeve type, serum bottle stoppers into two reducing unions. Insert the needle into the stoppers as shown in Figure 6–3.

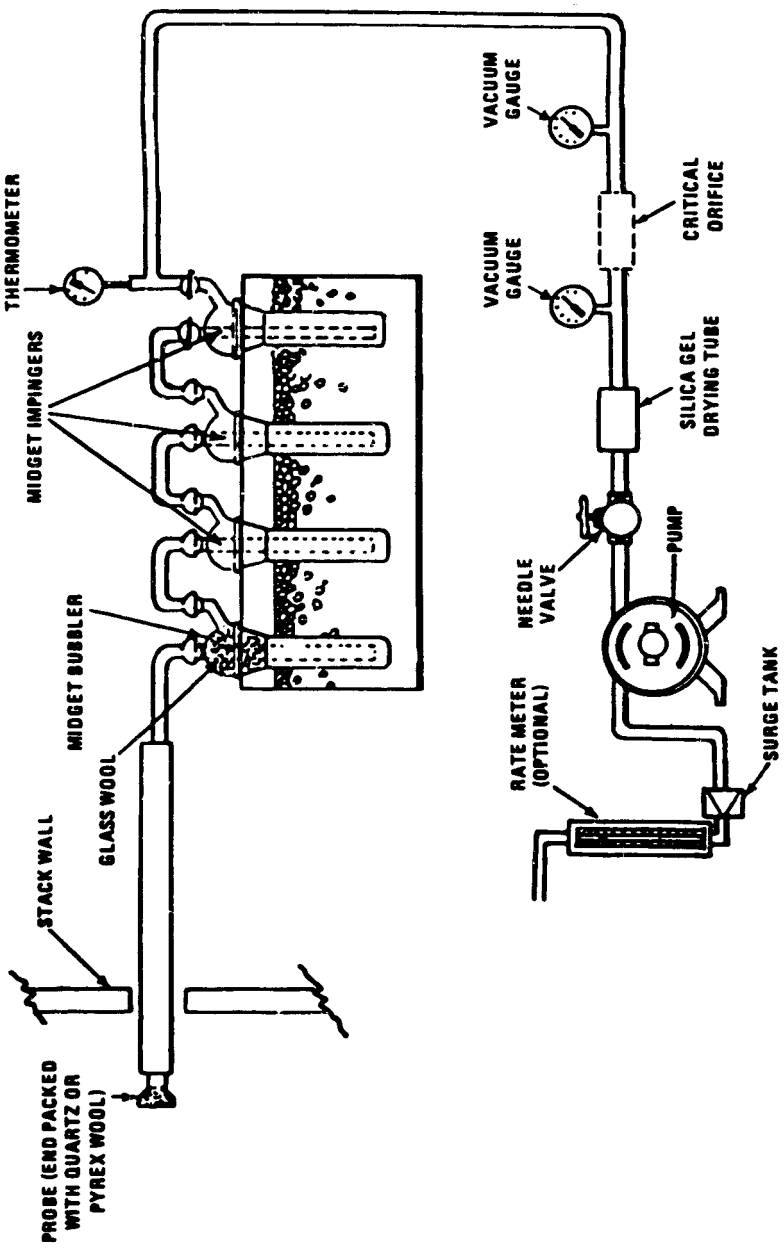

Figure 6-2. SO_2 sampling train using a critical orifice.

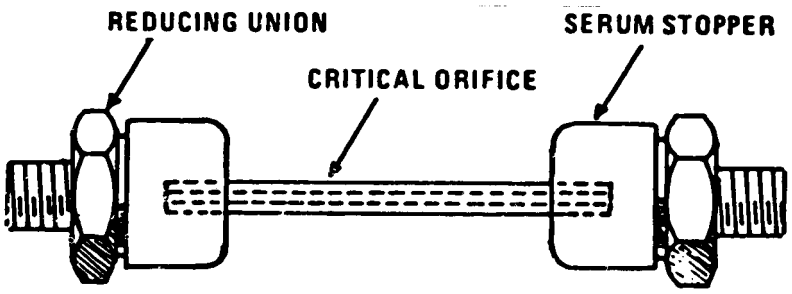

Figure 6-3. Critical orifice adaptation for Method 6 sampling train.

7.2.2 Selection of Critical Orifices. The procedure that follows describes the use of hypodermic needles and stainless steel needle tubings, which have been found suitable for use as critical orifices. Other materials and critical orifice designs may be used provided the orifices act as true critical orifices, i.e., a critical vacuum can be obtained, as described in this section. Select a critical orifice that is sized to operate at the desired flow rate. The needle sizes and tubing lengths shown below give the following approximate flow rates.

Gauge/cm	Flow rate, cc/min	Gauge/cm	Flow rate, cc/min
21/7.6	1100	23/3.8	500
22/2.9	1000	23/5.1	450
22/3.8	900	24/3.2	400

Determine the suitability and the appropriate operating vaccum of the critical orifice as follows: If applicable, temporarily attach a rotameter and surge tank to the outlet of the sampling train. Turn on the pump, and adjust the valve to give an outlet vacuum reading corresponding to about half of the atmospheric pressure. Observe the rotameter reading. Slowly increase the vacuum until a stable reading is obtained on the rotameter. Record the critical vacuum, which is the outlet vacuum when the rotameter first reaches a stable value. Orifices that do not reach a critical value shall not be used.

7.2.3 Field Procedure.

7.2.3.1 Leak-Check Procedure. A leak-check before the sampling run is recommended, but is optional. The leak-check procedure is as follows:

Temporarily attach a suitable (e.g., 0–40 cc/min) rotameter and surge tank, or a soap bubble meter and surge tank to the outlet of the pump. Plug the probe inlet, pull an outlet vacuum of at least 254 mm Hg (10 in. Hg), and note the flow rate as indicated by the rotameter or bubble meter. A leakage rate not in excess of 2 percent of the average sampling rate (Q_{std}) is acceptable. Carefully release the probe inlet plug before turning off the pump.

7.2.3.2 Moisture Determination. At the sampling location, prior to testing, determine the percent moisture of the ambient air using the wet and dry bulb temperatures or, if appropriate, a relative-humidity meter.

7.2.3.3 Critical Orifice Calibration. Prior to testing, at the sampling location, calibrate the entire sampling train using a 500-cc soap bubble meter which is attached to the inlet of the probe and an outlet vacuum of 25 to 50 mm Hg (1 to 2 in. Hg) above the critical vacuum. Record the information listed in Figure 6–4.

Calculate the standard volume of air measured by the soap bubble meter and the volumetric flow rate, using the equations below:

$$V_{sb(std)} = V_{sb}\left(\frac{T_{std}}{T_{amb}}\right)\left(\frac{P_{bar}}{P_{std}}\right) \qquad \text{Eq. 6-4}$$

$$Q_{std} = \frac{V_{sb(std)}}{\theta} \qquad \text{Eq. 6-5}$$

where:

P_{bar}=Barometric pressure, mm Hg (in. Hg).

P_{std}=Standard absolute pressure, 760 mm Hg (29.92 in. Hg).

Q_{std}=Volumetric flow rate through critical orifice, scm/min (scf/min).

T_{amb}=Ambient absolute temperature of air, °K (°R).

T_{std}=Standard absolute temperature, 273°K (528°R).

V_{sb}=Volume of gas as measured by the soap bubble meter, m^3 (ft^3).

$V_{sb(std)}$=Volume of gas as measured by the soap bubble meter, corrected to standard conditions, scm (scf).

Θ=Time, min.

Date _____ Train ID _____

Critical orifice size _____ Critical vacuum _____

		Pretest	Post-test
Soap bubble meter volume, V_{sb}	cc	_____	_____
	m^3 (ft^3)	_____	_____
Time, θ	sec	_____	_____
	min	_____	_____
Barometric pressure, P_{bar}	mm Hg (in. Hg)	_____	_____
Ambient temperature, t_{amb}	°C (°F)	_____	_____
Inlet vacuum, P_c	mm Hg (in. Hg)	_____	_____
Outlet vacuum	mm Hg (in. Hg)	_____	_____
$V_{sb(std)}$	m^3 (ft^3)	_____	_____
Flow rate, Q_{std}	$\frac{m^3}{min}\left(\frac{ft^3}{min}\right)$	_____	_____

Figure 6-4. Critical orifice calibration data.

7.2.3.4 Sampling. Operate the sampling train for sample collection at the same vacuum used during the calibration run. Start the watch and pump simultaneously. Take readings (temperature, rate meter, inlet vacuum, and outlet vacuum) at least every 5 minutes. At the end of the sampling run, stop the watch and pump simultaneously.

Conduct a post-test calibration run using the calibration procedure outlined in Section 7.2.3.3. If the Q_{std} obtained before and after the test differ by more than 5 pecent, void the test run; if not, calculate the volume of the gas measured with the critical orifice, $V_{m(std)}$, using Equation 6–6 and the average of Q_{std} of both runs, as follows:

$$V_{m(std)} = \bar{Q}_{std}\ \theta_s\ (1-B_{wa}) \left(\frac{P_{bar} + P_{sr}}{P_{bar} + P_c} \right) \qquad \text{Eq. 6-6}$$

where:

$V_{m(std)}$=Dry gas volume measured with the critical orifice, corrected to standard conditions, dscm (dscf).

Q_{std}=Average flow rate of pretest and post-test calibration runs, scm/min (scf/min).

B_{wa}=Water vapor in ambient air, proportion by volume.

θ_s=Sampling time, min.

P_c=Inlet vacuum reading obtained during the calibration run, mm Hg (in. Hg).

P_{sr}=Inlet vacuum reading obtained during the sampling run, mm Hg (in. Hg).

If the percent difference between the molecular weight of the ambient air at saturated conditions and the sample gas is more than ±3 percent, then the molecular weight of the gas sample must be considered in the calculations using the following equation:

$$V_{m(std)} = \bar{Q}_{std}\ \theta_s\ (1-B_{wa}) \sqrt{\frac{M_a}{M_s}} \left(\frac{P_{bar} + P_{sr}}{P_{bar} + P_c} \right) \qquad \text{Eq. 6-7}$$

where:

M_a=Molecular weight of the ambient air saturated at impinger temperature, g/g-mole (lb/lb-mole).

M_s=Molecular weight of the sample gas saturated at impinger temperature, g/g-mole (lb/lb-mole).

NOTE: A post-test leak-check is not necessary because the post-test calibration run results will indicate whether there is any leakage.

Drain the ice bath, and purge the sampling train using the procedure described in Section 4.1.3.

7.3 *Elimination of Ammonia Interference.* The following alternative procedures shall be used in addition to those specified in the method when sampling at sources having ammonia emissions.

7.3.1 *Sampling.* The probe shall be maintained at 275 °C and equipped with a high-efficiency in-stack filter (glass fiber) to remove particulate matter. The filter material shall be unreactive to SO_2. Whatman 934AH (formerly Reeve Angel 934AH) filters treated as described in Citation 10 of the Method 5 bibliography is an example of a filter that has been shown to work. Where alkaline particulate matter and condensed moisture are present in the gas stream, the filter shall be heated above the moisture dew point but below 225 °C.

7.3.2 *Sample Recovery.* Recover the sample according to Section 4.2 except for discarding the contents of the midget bubbler. Add the bubbler contents, including the rinsings of the bubbler with water, to the polyethylene bottle containing the rest of the sample. Under normal testing conditions where sulfur trioxide will not be present significantly, the tester may opt to delete the midget bubbler from the sampling train. If an approximation of the sulfur trioxide concentration is desired, transfer the contents of the midget bubbler to a separate polyethylene bottle.

7.3.3 *Sample Analysis.* Follow the procedures in Section 4.3, except add 0.5 ml of 0.1 N HC1 to the Erlenmeyer flask and mix before adding the indicator. The following analysis procedure may be used for an approximation of the sulfur trioxide concentration. The accuracy of the calculated concentration will depend upon the ammonia to

SO_2 ratio and the level of oxygen present in the gas stream. A fraction of the SO_2 will be counted as sulfur trioxide as the ammonia to SO_2 ratio and the sample oxygen content increases. Generally, when this ratio is 1 or less and the oxygen content is in the range of 5 percent, less than 10 percent of the SO_2 will be counted as sulfur trioxide. Analyze the peroxide and isopropanol sample portions separately. Analyze the peroxide portion as described above. Sulfur trioxide is determined by difference using sequential titration of the isopropanol portion of the sample. Transfer the contents of the isopropanol storage container to a 100-ml volumetric flask, and dilute to exactly 100 ml with water. Pipette a 20-ml aliquot of this solution into a 250-ml Erlenmeyer flask, add 0.5 ml of 0.1 N HC1, 80 ml of 100 percent isopropanol, and two to four drops of thorin indicator. Titrate to a pink endpoint using 0.0100 N barium perchlorate. Repeat and average the titration volumes that agree within 1 percent or 0.2 ml, whichever is larger. Use this volume in Equation 6–2 to determine the sulfur trioxide concentration. From the flask containing the remainder of the isopropanol sample, determine the fraction of SO_2 collected in the bubbler by pipetting 20-ml aliquots into 250-ml Erlenmeyer flasks. Add 5 ml of 3 percent hydrogen peroxide, 100 ml of 100 percent isopropanol, and two to four drops of thorin indicator, and titrate as before. From this titration volume, subtract the titrant volume determined for sulfur trioxide, and add the titrant volume determined for the peroxide portion. This final volume constitutes V_t, the volume of barium perchlorate used for the SO_2 sample.

8. *Bibliography*

1. Atmospheric Emissions from Sulfuric Acid Manufacturing Processes. U.S. DHEW, PHS, Division of Air Pollution. Public Health Service Publication No. 999–AP–13. Cincinnati, OH. 1965.

2. Corbett, P. F. The Determination of SO_2 and SO_3 in Flue Gases. Journal of the Institute of Fuel. *24:* 237–243, 1961.

3. Matty, R. E. and E. K. Diehl. Measuring Flue-Gas SO_2 and SO_3. Power. *101:* 94–97. November 1957.

4. Patton, W. F. and J. A. Brink, Jr. New Equipment and Techniques for Sampling Chemical Process Gases. J. Air Pollution Control Association. *13:* 162. 1963.

5. Rom, J. J. Maintenance, Calibration, and Operation of Isokinetic Source-sampling Equipment. Office of Air Programs, Environmental Protection Agency. Research Triangle Park, NC. APTD–0576. March 1972.

6. Hamil, H. F. and D. E. Camann. Collaborative Study of Method for the Determination of Sulfur Dioxide Emissions from Stationary Sources (Fossil-Fuel Fired Steam Generators). Environmental Protection Agency, Research Triangle Park, NC. EPA–650/4–74–024. December 1973.

7. Annual Book of ASTM Standards. Part 31; Water, Atmospheric Analysis. American Society for Testing and Materials. Philadelphia, PA. 1974. pp. 40–42.

8. Knoll, J. E. and M. R. Midgett. The Application of EPA Method 6 to High Sulfur Dioxide Concentrations. Environmental Protection Agency. Research Triangle Park, NC. EPA–600/4–76–038. July 1976.

9. Westlin, P. R. and R. T. Shigehara. Procedure for Calibrating and Using Dry Gas Meter Volume Meters as Calibration Standards. Source Evaluation Society Newsletter. *3*(1):17–30. February 1978.

10. Yu, K. K. Evaluation of Moisture Effect on Dry Gas Meter Calibration. Source Evaluation Society Newsletter. *5*(1):24–28. February 1980.

11. Lodge, J.P., Jr., J.B. Pate, B.E. Ammons, and G.A. Swanson. The Use of Hypodermic Needles as Critical Orifices in Air Sampling. J. Air Pollution Control Association. *16:*197–200. 1966.

12. Shigehara, R.T., and Candace B. Sorrell. Using Critical Orifices as Method 5 Calibration Standards. Source Evaluation Society Newsletter. *10*(3):4–15. August 1985.

METHOD 6A—DETERMINATION OF SULFUR DIOXIDE, MOISTURE, AND CARBON DIOXIDE EMISSIONS FROM FOSSIL FUEL COMBUSTION SOURCES

1. *Principle and Applicability*

1.1 Applicability. This method applies to the determination of sulfur dioxide (SO_2) emissions from fossil fuel combustion sources in terms of concentration (mg/m^3) and in terms of emission rate (ng/J) and to the determination of carbon dioxide (CO_2) concentration (percent). Moisture, if desired, may also be determined by this method.

The minimum detectable limit, the upper limit, and the interferences of the method for the measurement of SO_2 are the same as for Method 6. For a 20-liter sample, the method has a precision of 0.5 percent CO_2 for concentrations between 2.5 and 25 percent CO_2 and 1.0 percent moisture for moisture concentrations greater than 5 percent.

1.2 Principle. The principle of sample collection is the same as for Method 6 except that moisture and CO_2 are collected in addition to SO_2 in the same sampling train. Moisture and CO_2 fractions are determined gravimetrically.

2. *Apparatus*

2.1 Sampling. The sampling train is shown in Figure 6A–1; the equipment required is the same as for Method 6, Section 2.1, except as specified below:

2.1.1 SO_2 Absorbers. Two 30-ml midget impingers with a 1-mm restricted tip and two 30-ml midget bubblers with an unrestricted tip. Other types of impingers and

bubblers, such as Mae West for SO_2 collection and rigid cylinders for moisture absorbers containing Drierite, may be used with proper attention to reagent volumes and levels, subject to the Administrator's approval.

2.1.2 CO_2 Absorber. A sealable rigid cylinder or bottle with an inside diameter between 30 and 90 mm and a length between 125 and 250 mm and with appropriate connections at both ends.

NOTE: For applications downstream of wet scrubbers, a heated out-of-stack filter (either borosilicate glass wool or glass fiber mat) is necessary. The filter may be a separate heated unit or may be within the heated portion of the probe. If the filter is within the sampling probe, the filter should not be within 15 cm of the probe inlet or any unheated section of the probe, such as the connection to the first SO_2 absorber. The probe and filter should be heated to at least 20 °C above the source temperature, but not greater than 120 °C. The filter temperature (i.e., the sample gas temperature) should be monitored to assure the desired temperature is maintained. A heated Teflon connector may be used to connect the filter holder or probe to the first impinger.

NOTE: Mention of a brand name does not constitute endorsement by the Environmental Protection Agency.

2.2 Sample Recovery and Analysis. The equipment needed for sample recovery and analysis is the same as required for Method 6. In addition, a balance to measure within 0.05 g is needed for analysis.

3. *Reagents*

Unless otherwise indicated, all reagents must conform to the specifications established by the committee on analytical reagents of the American Chemical Society. Where such specifications are not available, use the best available grade.

3.1 Sampling. The reagents required for sampling are the same as specified in Method 6. In addition, the following reagents are required:

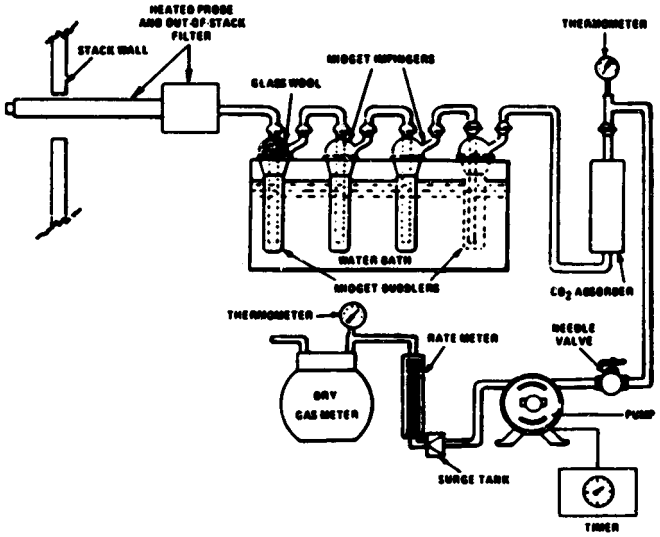

Figure 6A-1. Sampling train.

3.1.1 Drierite. Anhydrous calcium sulfate ($CaSO_4$) desiccant, 8 mesh, indicating type is recommended. (Do not use silica gel or similar desiccant in the application.)

3.1.2 CO_2 Absorbing Material. Ascarite II. Sodium hydroxide coated silica, 8 to 20 mesh.

3.2 Sample Recovery and Analysis. The reagents needed for sample recovery and analysis are the same as for Method 6, Sections 3.2 and 3.3, respectively.

4. *Procedure*

4.1 Sampling.

4.1.1 Preparation of Collection Train. Measure 15 ml of 80 percent isopropanol into the first midget bubbler and 15 ml of 3 percent hydrogen peroxide into each of the first two midget impingers as described in Method

6. Insert the glass wool into the top of the isopropanol bubbler as shown in Figure 6A–1. Into the fourth vessel in the train, the second midget bubbler, place about 25 g of Drierite. Clean the outsides of the bubblers and impingers, and weigh at room temperature (≃20 °C) to the nearest 0.1 g. Weigh the four vessels simultaneously, and record this initial mass.

With one end of the CO_2 absorber sealed, place glass wool in the cylinder to a depth of about 1 cm. Place about 150 g of CO_2 absorbing material in the cylinder on top of the glass wool, and fill the remaining space in the cylinder with glass wool. Assemble the cylinder as shown in Figure 6A–2. With the cylinder in a horizontal position, rotate it around the horizontal axis. The CO_2 absorbing material should remain in position during the rotation, and no open spaces or channels should be formed. If necessary, pack more glass wool into the cylinder to make the CO_2 absorbing material stable. Clean the outside of the cylinder of loose dirt and moisture and weigh at room temperature to the nearest 0.1 g. Record this initial mass.

Assemble the train as shown in Figure 6A–1. Adjust the probe heater to a temperature sufficient to prevent condensation (see Note in section 2.1.1). Place crushed ice and water around the impingers and bubblers. Mount the CO_2 absorber outside the water bath in a vertical flow position with the sample gas inlet at the bottom. Flexible tubing, e.g., Tygon, may be used to connect the last SO_2 absorbing bubbler to the Drierite absorber and to connect the Drierite absorber to the CO_2 absorber. A second, smaller CO_2 absorber containing Ascarite II may be added in line downstream of the primary CO_2 absorber as a breakthrough indicator. Ascarite II turns white when CO_2 is absorbed.

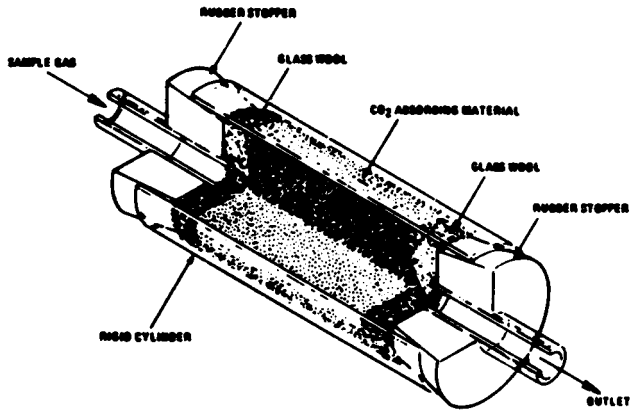

Figure 6A-2. CO_2 absorber.

4.1.2 Leak-Check Procedure and Sample Collection. The leak-check procedure and sample collection procedure are the same as specified in Method 6, Sections 4.1.2 and 4.1.3, respectively.

4.2 Sample Recovery.

4.2.1 Moisture Measurement. Disconnect the isopropanol bubbler, the SO_2 impingers, and the moisture absorber from the sample train. Allow about 10 minutes for them to reach room temperature, clean the outsides of loose dirt and moisture, and weigh them simultaneously in the same manner as in Section 4.1.1. Record this final mass.

4.2.2 Peroxide Solution. Discard the contents of the isopropanol bubbler and pour the contents of the midget impingers into a leak-free polyethylene bottle for shipping. Rinse the two midget impingers and connecting tubes with deionized distilled water, and add the washings to the same storage container.

4.2.3 CO_2 Absorber. Allow the CO_2 absorber to warm to room temperature (about 10 minutes), clean the outside of loose dirt and moisture, and weigh to the nearest 0.1 g in the same manner as in Section 4.1.1. Record this final mass. Discard used Ascarite II material.

4.3 Sample Analysis. The sample analysis procedure for SO_2 is the same as specified in Method 6, Section 4.3.

4.4 Quality Assurance (QA) Audit Samples. Only when this method is used for compliance determinations, obtain an audit sample set as directed in Section 3.3.6 of Method 6. Analyze the audit samples, and report the results as directed in Section 4.4 of Method 6. Acceptance criteria for the audit results are the same as in Method 6.

5. *Calibration*

The calibrations and checks are the same as required in Method 6, Section 5.

6. *Calculations*

Carry out calculations, retaining at least one extra decimal figure beyond that of the acquired data. Round off figures after final calculations. The calculations, nomenclature, and procedures are the same as specified in Method 6 with the addition of the following:

6.1 Nomenclature.

C_w= Concentration of moisture, percent.

C_{CO_2}=Concentration of CO_2, dry basis, percent.

m_{wi}=Initial mass of impingers, bubblers, and moisture absorber, g.

m_{wf}=Final mass of impingers, bubblers, and moisture absorber, g.

m_{ai}=Initial mass of CO_2 absorber, g.

m_{af}=Final mass of CO_2 absorber, g.

$V_{CO2(std)}$=Equivalent volume of CO_2 collected at standard conditions, dsm^3.

$V_{w(std)}$=Equivalent volume of moisture collected at standard conditions, sm^3.

5.467×10^{-4}=Equivalent volume of gaseous CO_2 at standard conditions per gram, sm^3/g.

1.336×10^{-3}=Equivalent volume of water vapor at standard conditions per gram, sm^3/g.

6.2 CO_2 Volume Collected, Corrected to Standard Conditions.

$$V_{CO2(std)} = 5.467 \times 10^{-4} (m_{af} - m_{ai}) \qquad \text{Eq. 6A–1}$$

6.3 Moisture Volume Collected, Corrected to Standard Conditions.

$$V_{w(std)} = 1.336 \times 10^{-3} (m_{wf} - m_{wi}) \qquad \text{Eq. 6A–2}$$

6.4 SO_2 Concentration.

$$C_{SO_2} = 32.03 \frac{(V_t - V_{tb}) N \left(\frac{V_{soln}}{V_s}\right)}{V_{m(std)} + V_{CO_2(std)}} \qquad \text{Eq. 6A–3}$$

6.5 CO_2 Concentration.

$$C_{CO_2} = \frac{V_{CO_2(std)}}{V_{m(std)} + V_{CO_2(std)}} \times 100 \qquad \text{Eq. 6A–4}$$

6.6 Moisture Concentration.

$$C_w = \frac{V_{w(std)}}{V_{m(std)} + V_{w(std)} + V_{CO2(std)}} \qquad \text{Eq. 6A-5}$$

7. *Emission Rate Procedure*

If the only emission measurement desired is in terms of emission rate of SO¶ (ng/J), an abbreviated procedure may be used. The differences between Method 6A and the abbreviated procedure are described below.

7.1 Sample Train. The sample train is the same as shown in Figure 6A–1 and as described in Section 4, except that the dry gas meter is not needed.

7.2 Preparation of the Collection Train. Follow the same procedure as in Section 4.1.1, except do not weigh the isopropanol bubbler, the SO_2 absorbing impingers or the moisture absorber.

7.3 Sampling. Operate the train as described in Section 4.1.3, except that dry gas meter readings, barometric pressure, and dry gas meter temperatures need not be recorded.

7.4 Sample Recovery. Follow the procedure in Section 4.2, except do not weigh the isopropanol bubbler, the SO_2 absorbing impingers, or the moisture absorber.

7.5 Sample Analysis. Analysis of the peroxide solution is the same as described in Section 4.3. Only when making compliance determinations, conduct an audit of the SO_2 analysis procedure as described in Section 4.4.

7.6 Calculations.

7.6.1 SO_2 Mass Collected.

$$m_{SO_2} = 32.03 \ (V_t - V_{tb}) \ N \ (V_{soln}/V_s) \qquad \text{Eq. 6A-7}$$

Where:

m_{SO2}=Mass of SO_2 collected, mg.

7.6.2 Sulfur Dioxide Emission Rate.

$$E_{SO_2} = F_c \ (1.829 \times 10^9) \frac{m_{SO_2}}{(m_{af} - m_{ai})} \qquad \text{Eq. 6A 8}$$

Where:

E_{SO2}=Emission rate of SO_2 (ng/J).

F_c=Carbon F Factor for the fuel burned, m^3/J, from Method 19.

8. *Bibliography*

1. Same as for Method 6, Citations 1 through 8, with the addition of the following:

2. Stanley, Jon and P.R. Westlin. An Alternate Method for Stack Gas Moisture Determination. Source Evaluation Society Newsletter. Vol. 3, No. 4. November 1978.

3. Whittle, Richard N. and P.R. Westlin. Air Pollution Test Report: Development and Evaluation of an Intermittent Integrated SO_2/CO_2 Emission Sampling Procedure. Environmental Protection Agency, Emission Standard and Engineering Division, Emission Measurement Branch. Research Triangle Park, NC. December 1979. 14 pages.

METHOD 6B—DETERMINATION OF SULFUR DIOXIDE AND CARBON DIOXIDE DAILY AVERAGE EMISSIONS FROM FOSSIL FUEL COMBUSTION SOURCES

1. *Principle and Applicability*

1.1 Applicability. This method applies to the determination of sulfur dioxide (SO_2) emissions from combustion sources in terms of concentration (ng/m^3) and emission rate (ng/J), and for the determination of carbon dioxide (CO_2) concentration (percent) on a daily (24 hours) basis.

The minimum detectable limits, upper limit, and the interferences for SO_2 measurements are the same as for Method 6. EPA-sponsored collaborative studies were undertaken to determine the magnitude of repeatability and reproducibility achievable by qualified testers following the procedures in this method. The results of the studies evolve from 145 field tests including comparisons with Methods 3 and 6. For measurements of emission rates from wet, flue gas desulfurization units in (ng/J), the repeatability (within laboratory precision) is 8.0 percent and the reproducibility (between laboratory precision) is 11.1 percent.

1.2 Principle. A gas sample is extracted from the sampling point in the stack intermittently over a 24-hour or other specified time period. Sampling may also be conducted continuously if the apparatus and procedures are appropriately modified (see Note in Section 4.1.1). The SO_2 and CO_2 are separated and collected in the sampling train. The SO_2 fraction is measured by the barium-thorin titration method, and CO_2 is determined gravimetrically.

2. *Apparatus*

The equipment required for this method is the same as specified for Method 6A, Section 2, except the isopropanol bubbler is not used. An empty bubbler for the collection of liquid droplets and does not allow direct contact between the collected liquid and the gas sample may be included in the train. For intermittent operation, include an industrial timer-switch designed to operate in the ''on'' position at least 2 minutes continuously and ''off'' the remaining period over a repeating cycle. The cycle of operation in designated in the applicable regulation. At a minimum, the sampling operation should include at least 12, equal, evenly-spaced periods per 24 hours.

For applications downstream of wet scrubbers, a heated out-of-stack filter (either borosilicate glass wool or glass fiber mat) is necessary. The probe and filter should be heated continuously to at least 20°C above the source temperature, but not greater than 120°C. The filter (i.e., sample gas) temperature should be monitored to assure the desired temperature is maintained.

Stainless steel sampling probes, type 316, are not recommended for use with Method 6B because of potential corrosion and contamination of sample. Glass probes or other types of stainless steel, e.g., Hasteloy or Carpenter 20, are recommended for long-term use.

Other sampling equipment, such as Mae West bubblers and rigid cylinders for moisture absorption, which requires sample or reagent volumes other than those specified in this procedure for full effectiveness may be used, subject to the approval of the Administrator.

3. *Reagents*

All reagents for sampling and analysis are the same as described in Method 6A, Section 3, except isopropanol is not used for sampling. The hydrogen peroxide absorbing solution shall be diluted to no less than 6 percent by volume, instead of 3 percent as specified in Method 6. If Method 6B is to be operated in a low sample flow condition (less than 100 ml/min), molecular sieve material may be substituted for Ascarite II as the CO_2 absorbing material. The recommended molecular sieve material is Union Carbide 1/16 inch pellets, 5A°, or equivalent. Molecular sieve material need not be discarded following the sampling run provided it is regenerated as per the manufacturer's instruction. Use of molecular sieve material at flow rates higher than 100 ml/min may cause erroneous CO_2 results.

4. *Procedure*

4.1 Sampling.

4.1.1 Preparation of Collection Train. Preparation of the sample train is the same as described in Method 6A, Section 4.1.4, with the addition of the following:

The sampling train is assembled as shown in Figure 6A–1, except the isopropanol bubbler is not included. The probe must be heated to a temperature sufficient to prevent water condensation and must include a filter (either in-stack, out-of-stack, or both) to prevent particulate entrainment in the peroxide impingers. The electric supply for the probe heat should be continuous and separate from the timed operation of the sample pump.

Adjust the timer-switch to operate in the ''on'' position from 2 to 4 minutes on a 2-hour repeating cycle or other cycle specified in the applicable regulation. Other timer sequences may be used with the restriction that the total sample volume collected is between 25 and 60 liters for the amounts of sampling reagents prescribed in this method.

Add cold water to the tank until the impingers and bubblers are covered at least two-thirds of their length. The impingers and bubbler tank must be covered and protected from intense heat and direct sunlight. If freezing conditions exist, the impinger solution and the water bath must be protected.

NOTE: Sampling may be conducted continuously if a low flow-rate sample pump (20

to 40 ml/min for the reagent volumes described in this method) is used. Then the timer-switch is not necessary. In addition, if the sample pump is designed for constant rate sampling, the rate meter may be deleted. The total gas volume collected should be between 25 and 60 liters for the amounts of sampling reagents prescribed in this method.

4.1.2 Leak-Check Procedure. The leak-check procedure is the same as described in Method 6, Section 4.1.2.

4.1.3 Sample Collection. Record the initial dry gas meter reading. To begin sampling, position the tip of the probe at the sampling point, connect the probe to the first impinger (or filter), and start the timer and the sample pump. Adjust the sample flow to a constant rate of approximately 1.0 liter/min as indicated by the rotameter. Assure that the timer is operating as intended, i.e., in the ''on'' position for the desired period and the cycle repeats as required.

During the 24-hour sampling period, record the dry gas meter temperature one time between 9:00 a.m. and 11:00 a.m., and the barometric pressure.

At the conclusion of the run, turn off the timer and the sample pump, remove the probe from the stack, and record the final gas meter volume reading. Conduct a leak check as described in Section 4.1.2. If a leak is found, void the test run or use procedures acceptable to the Administrator to adjust the sample volume for leakage. Repeat the steps in this section (4.1.3) for successive runs.

4.2 Sample Recovery. The procedures for sample recovery (moisture measurement, peroxide solution, and CO_2 absorber) are the same as in Method 6A, Section 4.2.

4.3 Sample Analysis. Analysis of the peroxide impinger solutions is the same as in Method 6, Section 4.3.

4.4 Quality Assurance (QA) Audit Samples. Only when this method is used for compliance determinations, obtain an audit sample set as directed in Section 3.3.6 of Method 6. Analyze the audit samples at least once for every 30 days of sample collection, and report the results as directed in Section 4.4 of Method 6. The analyst performing the sample analyses shall perform the audit analyses. If more than one analyst performed the sample analyses during the 30-day sampling period, each analyst shall perform the audit analyses and all audit results shall be reported. Acceptance criteria for the audit results are the same as in Method 6.

5. *Calibration*

5.1 Metering System.

5.1.1 Initial Calibration. The initial calibration for the volume metering system is the same as for Method 6, Section 5.1.1.

5.1.2 Periodic Calibration Check. After 30 days of operation of the test train, conduct a calibration check as in Section 5.1.1 above, except for the following variations: (1) The leak check is not to be conducted, (2) three or more revolutions of the dry gas meter must be used, and (3) only two independent runs need be made. If the calibration factor does not deviate by more than 5 percent from the initial calibration factor determined in Section 5.1.1, then the dry gas meter volumes obtained during the test series are acceptable and use of the train can continue. If the calibration factor deviates by more than 5 percent, recalibrate the metering system as in Section 5.1.1; and for the calculations for the preceding 30 days of data, use the calibration factor (initial or recalibration) that yields the lower gas volume for each test run. Use the latest calibration factor for succeeding tests.

5.2 Thermometers. Calibrate against mercury-in-glass thermometers initially and at 30-day intervals.

5.3 Rotameter. The rotameter need not be calibrated, but should be cleaned and maintained according to the manufacturer's instructions.

5.4 Barometer. Calibrate against a mercury barometer initially and at 30-day intervals.

5.5 Barium Perchlorate Solution. Standardize the barium perchlorate solution against 25 ml of standard sulfuric acid to which 100 ml of 100 percent isopropanol has been added.

6. *Calculations*

The nomenclature and calculation procedures are the same as in Method 6A with the following exceptions:

P_{bar}= Initial barometric pressure for the test period, mm Hg.

T_m= Absolute meter temperature for the test period, °K.

7. *Emission Rate Procedure*

The emission rate procedure is the same as described in Method 6A, Section 7, except that the timer is needed and is operated as described in this method. Only when this method is used for compliance determinations, perform the QA audit analyses as described in Section 4.4.

8. *Bibliography*

The bibliography is the same as described in Method 6A, with the addition of the following:

1. Butler, Frank E; J.E. Knoll, J.C. Suggs, M.R. Midgett, and W. Mason. The Collaborative Test of Method 6B: Twenty-Four-Hour Analysis of SO_2 and CO_2. JAPCA. Vol. 33, No. 10. October 1983.

METHOD 6C—DETERMINATION OF SULFUR DIOXIDE EMISSIONS FROM STATIONARY SOURCES (INSTRUMENTAL ANALYZER PROCEDURE)

1. *Applicability and Principle*

1.1 *Applicability*. This method is applicable to the determination of sulfur dioxide (SO_2)

concentrations in controlled and uncontrolled emissions from stationary sources only when specified within the regulations.

1.2 Principle. A gas sample is continuously extracted from a stack, and a portion of the sample is conveyed to an instrumental analyzer for determination of SO_2 gas concentration using an ultraviolet (UV), nondispersive infrared (NDIR), or fluorescence analyzer. Performance specifications and test procedures are provided to ensure reliable data.

2. *Range and Sensitivity*

2.1 Analytical Range. The analytical range is determined by the instrumental design. For this method, a portion of the analytical range is selected by choosing the span of the monitoring system. The span of the monitoring system shall be selected such that the pollutant gas concentration equivalent to the emission standard is not less than 30 percent of the span. If at any time during a run the measured gas concentration exceeds the span, the run shall be considered invalid.

2.2 Sensitivity. The minimum detectable limit depends on the analytical range, span, and signal-to-noise ratio of the measurement system. For a well designed system, the minimum detectable limit should be less than 2 percent of the span.

3. *Definitions*

3.1 Measurement System. The total equipment required for the determination of gas concentration. The measurement system consists of the following major subsystems:

3.1.1 Sample Interface. That portion of a system used for one or more of the following: sample acquisition, sample transport, sample conditioning, or protection of the analyzers from the effects of the stack effluent.

3.1.2 Gas Analyzer. That portion of the system that senses the gas to be measured and generates an output proportional to its concentration.

3.1.3 Data Recorder. A strip chart recorder, analog computer, or digital recorder for recording measurement data from the analyzer output.

3.2 Span. The upper limit of the gas concentration measurement range displayed on the data recorder.

3.3 Calibration Gas. A known concentration of a gas in an appropriate diluent gas.

3.4 Analyzer Calibration Error. The difference between the gas concentration exhibited by the gas analyzer and the known concentration of the calibration gas when the calibration gas is introduced directly to the analyzer.

3.5 Sampling System Bias. The difference between the gas concentrations exhibited by the measurement system when a known concentration gas is introduced at the outlet of the sampling probe and when the same gas is introduced directly to the analyzer.

3.6 Zero Drift. The difference in the measurement system output reading from the initial calibration response at the zero concentration level after a stated period of operation during which no unscheduled maintenance, repair, or adjustment took place.

3.7 Calibration Drift. The difference in the measurement system output reading from the initial calibration response at a mid-range calibration value after a stated period of operation during which no unscheduled maintenance, repair, or adjustment took place.

3.8 Response Time. The amount of time required for the measurement system to display 95 percent of a step change in gas concentration on the data recorder.

3.9 Interference Check. A method for detecting analytical interferences and excessive biases through direct comparison of gas concentrations provided by the measurement system and by a modified Method 6 procedure. For this check, the modified Method 6 samples are acquired at the sample by-pass discharge vent.

3.10 Calibration Curve. A graph or other systematic method of establishing the relationship between the analyzer response and the actual gas concentration introduced to the analyzer.

4. *Measurement System Performance Specifications*

4.1 Analyzer Calibration Error. Less than ±2 percent of the span for the zero, mid-range, and high-range calibration gases.

4.2 Sampling System Bias. Less than ±5 percent of the span for the zero, and mid- or high-range calibration gases.

4.3 Zero Drift. Less than ±3 percent of the span over the period of each run.

4.4 Calibration Drift. Less than ±3 percent of the span over the period of each run.

4.5 Interference Check. Less than ±7 percent of the modified Method 6 result for each run.

5. *Apparatus and Reagents*

5.1 Measurement System. Any measurement system for SO_2 that meets the specifications of this method. A schematic of an acceptable measurement system is shown in Figure 6C–1. The essential components of the measurement system are described below:

5.1.1 Sample Probe. Glass, stainless steel, or equivalent, of sufficient length to traverse the sample points. The sampling probe shall be heated to prevent condensation.

5.1.2 Sample Line. Heated (sufficient to prevent condensation) stainless steel or Teflon tubing, to transport the sample gas to the moisture removal system.

5.1.3 Sample Transport Lines. Stainless steel or Teflon tubing, to transport the sample from the moisture removal system to the sample pump, sample flow rate control, and sample gas manifold.

5.1.4 Calibration Valve Assembly. A three-way valve assembly, or equivalent, for blocking the sample gas flow and introducing calibration gases to the measurement system at the outlet of the sampling probe when in the calibration mode.

5.1.5 Moisture Removal System. A refrigerator-type condenser or similar device (e.g., permeation dryer), to remove condensate continuously from the sample gas while maintaining minimal contact between the condensate and the sample gas. The moisture removal system is not necessary for analyzers that can measure gas concentrations on a wet basis; for these analyzers, (1) heat the sample line and all interface components up to the inlet of the analyzer sufficiently to prevent condensation, and (2) determine the moisture content and correct the measured gas concentrations to a dry basis using appropriate methods, subject to the approval of the Administrator. The determination of sample moisture content is not necessary for pollutant analyzers that measure concentrations on a wet basis when (1) a wet basis CO_2 analyzer operated according to Method 3A is used to obtain simultaneous measurements, and (2) the pollutant/CO_2 measurements are used to determine emissions in units of the standard.

5.1.6 Particulate Filter. An in-stack or heated (sufficient to prevent water condensation) out-of-stack filter. The filter shall be borosilicate or quartz glass wool, or glass fiber mat. Additional filters at the inlet or outlet of the moisture removal system and inlet of the analyzer may be used to prevent accumulation of particulate material in the measurement system and extend the useful life of the components. All filters shall be fabricated of materials that are nonreactive to the gas being sampled.

5.1.7 Sample Pump. A leak-free pump, to pull the sample gas through the system at a flow rate sufficient to minimize the response time of the measurement system. The pump may be constructed of any material that is nonreactive to the gas being sampled.

5.1.8 Sample Flow Rate Control. A sample flow rate control valve and rotameter, or equivalent, to maintain a constant sampling rate within 10 percent.

(NOTE: The tester may elect to install a back-pressure regulator to maintain the sample gas manifold at a constant pressure in order to protect the analyzer(s) from overpressurization, and to minimize the need for flow rate adjustments.)

5.1.9 Sample Gas Manifold. A sample gas manifold, to divert a portion of the sample gas stream to the analyzer, and the remainder to the by-pass discharge vent. The sample gas manifold should also include provisions for introducing calibration gases directly to the analyzer. The manifold may be constructed of any material that is nonreactive to the gas being sampled.

5.1.10 Gas Analyzer. A UV or NDIR absorption or fluorescence analyzer, to determine continuously the SO_2 concentration in the sample gas stream. The analyzer shall meet the applicable performance specifications of Section 4. A means of controlling the analyzer flow rate and a device for determining proper sample flow rate (e.g., precision rotameter, pressure gauge downstream of all flow controls, etc.) shall be provided at the analyzer.

(NOTE: Housing the analyzer(s) in a clean, thermally-stable, vibration-free environment will minimize drift in the analyzer calibration.)

5.1.11 Data Recorder. A strip chart recorder, analog computer, or digital recorder, for recording measurement data. The data recorder resolution (i.e., readability) shall be 0.5 percent of span. Alternatively, a digital or analog meter having a resolution of 0.5 percent of span may be used to obtain the analyzer responses and the readings may be recorded manually. If this alternative is used, the readings shall be obtained at equally spaced intervals over the duration of the sampling run. For sampling run durations of less than 1 hour, measurements at 1-minute intervals or a minimum of 30 measurements, whichever is less restrictive, shall be obtained. For sampling run durations greater than 1 hour, measurements at 2-minute intervals or a minimum of 96 measurements, whichever is less restrictive, shall be obtained.

5.2 Method 6 Apparatus and Reagents. The apparatus and reagents described in Method 6, and shown by the schematic of the sampling train in Figure 6C–2, to conduct the interference check.

5.3 SO_2 Calibration Gases. The calibration gases for the gas analyzer shall be SO_2 in N_2 or SO_2 in air. Alternatively, SO_2/CO_2, SO_2/O_2, or $SO_2/CO_2/O_2$ gas mixtures in N_2 may be used. For fluorescence-based analyzers, the O_2 and CO_2 concentrations of the calibration gases as introduced to the analyzer shall be within 1 percent (absolute) O_2 and 1 percent (absolute) CO_2 of the O_2 and Co_2 concentrations of the effluent samples as introduced to the analyzer. Alternatively, for fluorescence-based analyzers, use calibration blends of SO_2 in air and the nomographs provided by the vendor to determine the quenching correction factor (the effluent O_2 and CO_2 concentrations must be known). Use three calibration gases as specified below:

5.3.1 High-Range Gas. Concentration equivalent to 80 to 100 percent of the span.

5.3.2 Mid-Range Gas. Concentration equivalent to 40 to 60 percent of the span.

5.3.3 Zero Gas. Concentration of less than 0.25 percent of the span. Purified ambient air may be used for the zero gas by passing air through a charcoal filter, or through one or more impingers containing a solution of 3 percent H_2O_2.

6. *Measurement System Performance Test Procedures*

Perform the following procedures before measurement of emissions (Section 7).

6.1 Calibration Gas Concentration Verification. There are two alternatives for establishing the concentrations of calibration gases. Alternative Number 1 is preferred.

6.1.1 Alternative Number 1—Use of calibration gases that are analyzed following the Environmental Protection Agency Traceability Protocol Number 1 (see Citation 1 in the Bibliography). Obtain a certification from the gas manufacturer that Protocol Number 1 was followed.

6.1.2 Alternative Number 2—Use of calibration gases not prepared according to Protocol Number 1. If this alternative is chosen, obtain gas mixtures with a manufacturer's tolerance not to exceed ±2 percent of the tag value. Within 6 months before the emission test, analyze each of the calibration gases in triplicate using Method 6. Citation 2 in the Bibliography describes procedures and techniques that may be used for this analysis. Record the results on a data sheet (example is shown in Figure 6C–3). Each of the individual SO_2 analytical results for each calibration gas shall be within 5 percent (or 5 ppm, whichever is greater) of the triplicate set average; otherwise, discard the entire set, and repeat the triplicate analyses. If the average of the triplicate analyses is within 5 percent of the calibration gas manufacturer's cylinder tag value, use the tag value; otherwise, conduct at least three additional analyses until the results of six consecutive runs agree with 5 percent (or 5 ppm, whichever is greater) of their average. Then use this average for the cylinder value.

6.2 Measurement System Preparation. Assemble the measurement system by following the manufacturer's written instructions for preparing and preconditioning the gas analyzer and, as applicable, the other system components. Introduce the calibration gases in any sequence, and make all necessary adjustments to calibrate the analyzer and the data recorder. Adjust system components to achieve correct sampling rates.

6.3 Analyzer Calibration Error. Conduct the analyzer calibration error check by introducing calibration gases to the measurement system at any point upstream of the gas analyzer as follows:

6.3.1 After the measurement system has been prepared for use, introduce the zero, mid-range, and high-range gases to the analyzer. During this check, make no adjustments to the system except those necessary to achieve the correct calibration gas flow rate at the analyzer. Record the analyzer responses to each calibration gas on a form similar to Figure 6C–4.

NOTE: A calibration curve established prior to the analyzer calibration error check may be used to convert the analyzer response to the equivalent gas concentration introduced to the analyzer. However, the same correction procedure shall be used for all effluent and calibration measurements obtained during the test.

6.3.2 The analyzer calibration error check shall be considered invalid if the gas concentration displayed by the analyzer exceeds ±2 percent of the span for any of the calibration gases. If an invalid calibration is exhibited, take corrective action, and repeat the analyzer calibration error check until acceptable performance is achieved.

6.4 Sampling System Bias Check. Perform the sampling system bias check by introducing calibration gases at the calibration valve installed at the outlet of the sampling probe. A zero gas and either the mid-range or high-range gas, whichever most closely approximates the effluent concentrations, shall be used for this check as follows:

6.4.1 Introduce the upscale calibration gas, and record the gas concentration displayed by the analyzer on a form similar to Figure 6C–5. Then introduce zero gas, and record the gas concentration displayed by the analyzer. During the sampling system bias check, operate the system at the normal sampling rate, and make no adjustments to the measurement system other than those necessary to achieve proper calibration gas flow rates at the analyzer. Alternately introduce the zero and upscale gases until a stable response is achieved. The tester shall determine the measurement system response time by observing the times required to achieve a stable response for both the zero and upscale gases. Note the longer of the two times as the response time.

6.4.2 The sampling system bias check shall be considered invalid if the difference between the gas concentrations displayed by the measurement system for the analyzer calibration error check and for the sampling system bias check exceeds ±5 percent of the span for either the zero or upscale calibration gas. If an invalid calibration is exhibited, take corrective action, and repeat the sampling system bias check until acceptable performance is achieved. If adjustment to the analyzer is required, first repeat the analyzer calibration error check, then repeat the sampling system bias check.

7. *Emission Test Procedure*

7.1 Selection of Sampling Site and Sampling Points. Select a measurement site and sampling points using the same criteria that are applicable to Method 6.

7.2 Interference Check Preparation. For each individual analyzer, conduct an interference check for at least three runs during the initial field test on a particular source category. Retain the results, and report

them with each test performed on that source category.

If an interference check is being performed, assemble the modified Method 6 train (flow control valve, two midget impingers containing 3 percent H_2O_2, and dry gas meter) as shown in Figure 6C–2. Install the sampling train to obtain a sample at the measurement system sample by-pass discharge vent. Record the initial dry gas meter reading.

7.3 Sample Collection. Position the sampling probe at the first measurement point, and begin sampling at the same rate as used during the sampling system bias check. Maintain constant rate sampling (i.e., ±10 percent) during the entire run. The sampling time per run shall be the same as for Method 6 plus twice the system response time. For each run, use only those measurements obtained after twice response time of the measurement system has elapsed, to determine the average effluent concentration. If an interference check is being performed, open the flow control valve on the modified Method 6 train concurrent with the initiation of the sampling period, and adjust the flow to 1 liter per minute (±10 percent).

(NOTE: If a pump is not used in the modified Method 6 train, caution should be exercised in adjusting the flow rate since overpressurization of the impingers may cause leakage in the impinger train, resulting in positively biased results).

7.4 Zero and Calibration Drift Tests. Immediately preceding and following each run, or if adjustments are necessary for the measurement system during the run, repeat the sampling system bias check procedure described in Section 6.4 (Make no adjustments to the measurement system until after the drift checks are completed.) Record and analyzer's responses on a form similar to Figure 6C–5.

7.4.1 If either the zero or upscale calibration value exceeds the sampling system bias specification, then the run is considered invalid. Repeat both the analyzer calibration error check procedure (Section 6.3) and the sampling system bias check procedure (Section 6.4) before repeating the run.

7.4.2 If both the zero and upscale calibration values are within the sampling system bias specification, then use the average of the initial and final bias check values to calculate the gas concentration for the run. If the zero or upscale calibration drift value exceeds the drift limits, based on the difference between the sampling system bias check responses immediately before and after the run, repeat both the analyzer calibration error check procedure (Section 6.3) and the sampling system bias check procedure (Section 6.4) before conducting additional runs.

7.5 Interference Check (if performed). After completing the run, record the final dry gas meter reading, meter temperature, and barometric pressure. Recover and analyze the contents of the midget impingers, and determine the SO_2 gas concentration using the procedures of Method 6. (It is not necessary to analyze EPA performance audit samples for Method 6.) Determine the average gas concentration exhibited by the analyzer for the run. If the gas concentrations provided by the analyzer and the modified Method 6 differ by more than 7 percent of the modified Method 6 result, the run is invalidated.

8. *Emission Calculation*

The average gas effluent concentration is determined from the average gas concentration displayed by the gas analyzer, and is adjusted for the zero and upscale sampling system bias checks, as determined in accordance with Section 7.4. The average gas concentration displayed by the analyzer may be determined by integration of the area under the curve for chart recorders, or by averaging all of the effluent measurements. Alternatively, the average may be calculated from measurements recorded at equally spaced intervals over the entire duration of the run. For sampling run durations of less than 1 hour, measurements at 1-minute intervals or a minimum of 30 measurements, whichever is less restrictive, shall be used. For sampling run durations greater than 1 hour, measurements at 2–minute intervals or a minimum of 96 measurements, whichever is less restrictive, shall be used. Calculate the effluent gas concentration using Equation 6C–1.

$$C_{gas} = \left(\overline{C} - C_o\right)\frac{C_{ma}}{C_m - C_o} \qquad \text{Eq. 6C-1}$$

Where:

C_{gas} = Effluent gas concentration, dry basis, ppm.

$\overline{C}$ = Average gas concentration indicated by gas analyzer, dry basis, ppm.

C_o = Average of initial and final system calibration bias check responses for the zero gas, ppm.

C_m = Average of initial and final system calibration bias check responses for the upscale calibration gas, ppm.

C_{ma} = Actual concentration of the upscale calibration gas, ppm.

9. *Bibliography*

1. Traceability Protocol for Establishing True Concentrations of Gases Used for Calibrations and Audits of Continuous Source Emission Monitors: Protocol Number 1. U.S. Environmental Protection Agency, Quality Assurance Division. Research Triangle Park, NC. June 1978.

2. Westlin, Peter R. and J. W. Brown. Methods for Collecting and Analyzing Gas Cylinder Samples. Source Evaluation Society Newsletter. *3*(3):5–15. September 1978.

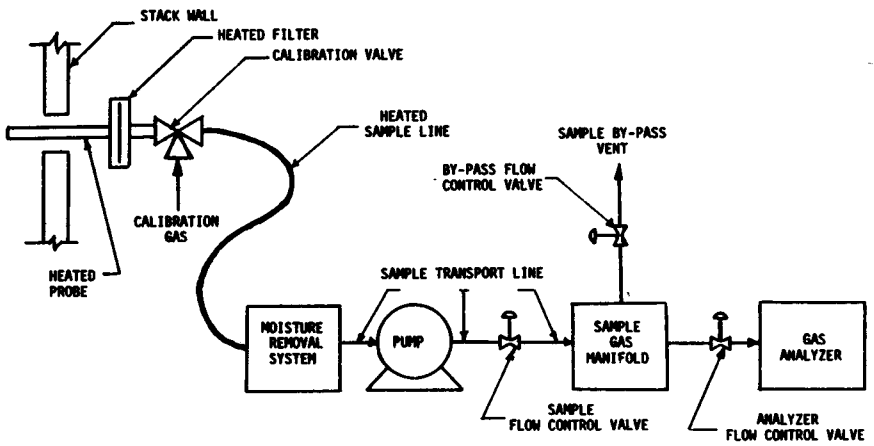

Figure 6C-1. Measurement system schematic.

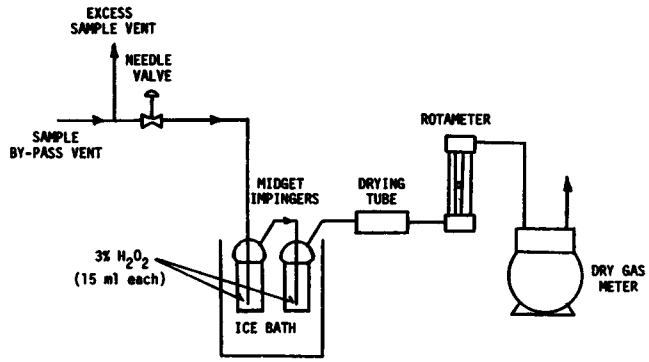

Figure 6C-2. Interference check sampling train.

FIGURE 6C–3—ANALYSIS OF CALIBRATION GASES

Analytic method used

Date

	Gas concentration (indicate units)		
	Zero [a]	Mid-range [b]	High-range [c]
Sample run:			
1			
2			
3			
Average			
Maximum percent deviation			

[a] Average must be less than 0.25 percent of span.

[b] Average must be 50 to 60 percent of span.
[c] Average must be 80 to 90 percent of span.

FIGURE 6C–4—ANALYZER CALIBRATION DATA

Source identification:
Test personnel:
Date:
Analyzer calibration data for sampling runs:
Span:

	Cylinder value (indicate units)	Analyzer calibration response (indicate units)	Absolute difference (indicate units)	Difference (percent of span)
Zero gas				
Mid-range gas				
High-range gas				

FIGURE 6C–5—SYSTEM CALIBRATION BIAS AND DRIFT DATA

Source identification:
Test personnel:
Date:
Run number:
Span:

	Analyzer calibration response	Initial values		Final values		Drift (percent of span)
		System calibration response	System cal. bias (percent of span)	System calibration response	System cal. bias (percent of span)	
Zero gas						
Upscale gas						

$$\text{System Calibration Bias} = \frac{\text{System Cal. Response-Analyzer Cal. Response}}{\text{Span}} \times 100$$

$$\text{Drift} = \frac{\text{Final System Cal. Response-Initial System Cal. Response}}{\text{Span}} \times 100$$

METHOD 7—DETERMINATION OF NITROGEN OXIDE EMISSIONS FROM STATIONARY SOURCES

1. *Principle and Applicability*

1.1 Principle. A grab sample is collected in an evacuated flask containing a dilute sulfuric acid-hydrogen peroxide absorbing solution, and the nitrogen oxides, except nitrous oxide, are measured colorimetrically using the phenoldisulfonic acid (PDS) procedure.

1.2 Applicability. This method is applicable to the measurement of nitrogen oxides emitted from stationary sources. The range of the method has been determined to be 2 to 400 milligrams NO_x (as NO_2) per dry standard cubic meter, without having to dilute the sample.

2. *Apparatus*

2.1 Sampling (see Figure 7–1). Other grab sampling systems or equipment, capable of measuring sample volume to within ±2.0 percent and collecting a sufficient sample volume to allow analytical reproducibility to within ±5 percent, will be considered acceptable alternatives, subject to approval of the Administrator, U.S. Environmental Protection Agency. The following equipment is used in sampling:

2.1.1 Probe. Borosilicate glass tubing, sufficiently heated to prevent water condensation and equipped with an in-stack or out-stack filter to remove particulate matter (a

[3] Mention of trade names or specific products does not constitute endorsement by the Environmental Protection Agency.

plug of glass wool is satisfactory for this purpose). Stainless steel or Teflon[3] tubing may also be used for the probe. Heating is not necessary if the probe remains dry during the purging period.

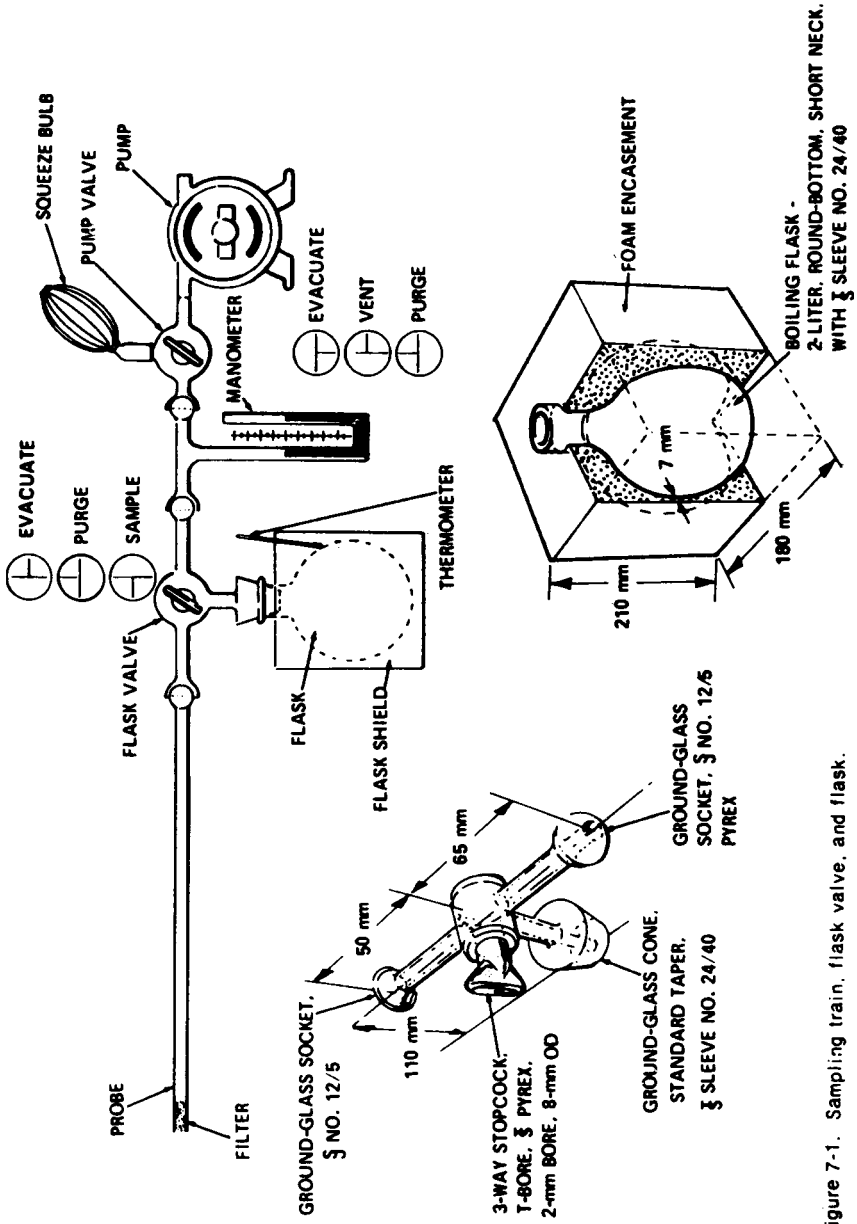

Figure 7-1. Sampling train, flask valve, and flask.

2.1.2 Collection Flask. Two-liter borosilicate, round bottom flask, with short neck and 24/40 standard taper opening, protected against implosion or breakage.

2.1.3 Flask Valve. T-bore stopcock connected to a 24/40 standard taper joint.

2.1.4 Temperature Gauge. Dial-type thermometer, or other temperature gauge, capable of measuring 1 °C (2 °F) intervals from −5 to 50 °C (25 to 125 °F).

2.1.5 Vacuum Line. Tubing capable of withstanding a vacuum of 75 mm Hg (3 in. Hg) absolute pressure, with ''T'' connection and T-bore stopcock.

2.1.6 Vacuum Gauge. U-tube manometer, 1 meter (36 in.), with 1-mm (0.1-in.) divisions, or other gauge capable of measuring pressure to within ±2.5 mm Hg (0.10 in. Hg).

2.1.7 Pump. Capable of evacuating the collection flask to a pressure equal to or less than 75 mm Hg (3 in. Hg) absolute.

2.1.8 Squeeze Bulb. One-way.

2.1.9 Volumetric Pipette. 25 ml.

2.1.10 Stopcock and Ground Joint Grease. A high-vacuum, high-temperature chlorofluorocarbon grease is required. Halocarbon 25–5S has been found to be effective.

2.1.11 Barometer. Mercury, aneroid, or other barometer capable of measuring atmospheric pressure to within 2.5 mm Hg (0.1 in. Hg). In many cases, the barometric reading may be obtained from a nearby National Weather Service station, in which case the station value (which is the absolute barometric pressure) shall be requested and an adjustment for elevation differences between the weather station and sampling point shall be applied at a rate of minus 2.5 mm Hg (0.1 in. Hg) per 30 m (100 ft) elevation increase, or vice versa for elevation decrease.

2.2 Sample Recovery. The following equipment is required for sample recovery:

2.2.1 Graduated Cylinder. 50 ml with 1-ml divisions.

2.2.2 Storage Containers. Leak-free polyethylene bottles.

2.2.3 Wash Bottle. Polyethylene or glass.

2.2.4 Glass Stirring Rod.

2.2.5 Test Paper for Indicating pH. To cover the pH range of 7 to 14.

2.3 Analysis. For the analysis, the following equipment is needed:

2.3.1 Volumetric Pipettes. Two 1 ml, two 2 ml, one 3 ml, one 4 ml, two 10 ml, and one 25 ml for each sample and standard.

2.3.2 Porcelain Evaporating Dishes. 175- to 250-ml capacity with lip for pouring, one for each sample and each standard. The Coors No. 45006 (shallow-form, 195 ml) has been found to be satisfactory. Alternatively, polymethyl pentene beakers (Nalge No. 1203, 150 ml), or glass beakers (150 ml) may be used. When glass beakers are used, etching of the beakers may cause solid matter to be present in the analytical step; the solids should be removed by filtration (see Section 4.3).

2.3.3 Steam Bath. Low-temperature ovens or thermostatically controlled hot plates kept below 70 °C (160 °F) are acceptable alternatives.

2.3.4 Dropping Pipette or Dropper. Three required.

2.3.5 Polyethylene Policeman. One for each sample and each standard.

2.3.6 Graduated Cylinder. 100 ml with 1-ml divisions.

2.3.7 Volumetric Flasks. 50 ml (one for each sample and each standard), 100 ml (one for each sample and each standard, and one for the working standard KNO_3 solution), and 1000 ml (one).

2.3.8 Spectrophotometer. To measure absorbance at 410 nm.

2.3.9 Graduated Pipette. 10 ml with 0.1-ml divisions.

2.3.10 Test Paper for Indicating pH. To cover the pH range of 7 to 14.

2.3.11 Analytical Balance. To measure to within 0.1 mg.

3. *Reagents*

Unless otherwise indicated, it is intended that all reagents conform to the specifications established by the Committee on Analytical Reagents of the American Chemical Society, where such specifications are available; otherwise, use the best available grade.

3.1 Sampling. To prepare the absorbing solution, cautiously add 2.8 ml concentrated H_2SO_4 to 1 liter of deionized, distilled water. Mix well and add 6 ml of 3 percent hydrogen peroxide, freshly prepared from 30 percent hydrogen peroxide solution. The absorbing solution should be used within 1 week of its preparation. Do not expose to extreme heat or direct sunlight.

3.2 Sample Recovery. Two reagents are required for sample recovery:

3.2.1 Sodium Hydroxide (1*N*). Dissolve 40 g NaOH in deionized, distilled water and dilute to 1 liter.

3.2.2 Water. Deionized, distilled to conform to ASTM Specification D1193–77, Type 3 (incorporated by reference—see §60.17). At the option of the analyst, the $KMnO_4$ test for oxidizable organic matter may be omitted when high concentrations of organic matter are not expected to be present.

3.3 Analysis. For the analysis, the following reagents are required:

3.3.1 Fuming Sulfuric Acid. 15 to 18 percent by weight free sulfur trioxide. HANDLE WITH CAUTION.

3.3.2 Phenol. White solid.

3.3.3 Sulfuric Acid. Concentrated, 95 percent minimum assay. HANDLE WITH CAUTION.

3.3.4 Potassium Nitrate. Dried at 105 to 110 °C (220 to 230 °F) for a minimum of 2 hours just prior to preparation of standard solution.

3.3.5 Standard KNO_3 Solution. Dissolve exactly 2.198 g of dried potassium nitrate (KNO_3) in deionized, distilled water and dilute to 1 liter with deionized, distilled water in a 1,000-ml volumetric flask.

3.3.6 Working Standard KNO_3 Solution. Dilute 10 ml of the standard solution to 100 ml with deionized distilled water. One milliter of the working standard solution is equivalent to 100 µg nitrogen dioxide (NO_2).

3.3.7 Water. Deionized, distilled as in Section 3.2.2.

3.3.8 Phenoldisulfonic Acid Solution. Dissolve 25 g of pure white phenol in 150 ml concentrated sulfuric acid on a steam bath. Cool, add 75 ml fuming sulfuric acid, and heat at 100 °C (212 °F) for 2 hours. Store in a dark, stoppered bottle.

3.3.9 Quality Assurance Audit Samples. Nitrate samples in glass vials prepared by EPA's Environmental Monitoring Systems Laboratory, Quality Assurance Division, Source Branch, Mail Drop 77A, Research Triangle Park, North Carolina 27711. Each set will consist of two vials having solutions of unknown concentrations. Only when making compliance determinations, obtain an audit sample set from the quality assurance management office at each EPA regional office or the responsible enforcement agency. (NOTE: The tester should notify the quality assurance office or the responsible enforcement agency at least 30 days prior to the test date to allow sufficient time for sample delivery.)

4. *Procedures*

4.1 Sampling.

4.1.1 Pipette 25 ml of absorbing solution into a sample flask, retaining a sufficient quantity for use in preparing the calibration standards. Insert the flask valve stopper into the flask with the valve in the ''purge'' position. Assemble the sampling train as shown in Figure 7–1 and place the probe at the sampling point. Make sure that all fitings are tight and leak-free, and that all ground glass joints have been properly greased with a high-vacuum, high-temperature chlorofluorocarbon-based stopcock grease. Turn the flask valve and the pump valve to their ''evacuate'' positions. Evacuate the flask to 75 mm Hg (3 in. Hg) absolute pressure, or less. Evacuation to a pressure approaching the vapor pressure of water at the existing temperature is desirable. Turn the pump valve to its ''vent'' position and turn the off the pump. Check for leakage by observing the manometer for any pressure fluctuation. (Any variation greater than 10 mm Hg (0.4 in. Hg) over a period of 1 minute is not acceptable, and the flask is not to be used until the leakage problem is corrected. Pressure in the flask is not to exceed 75 mm Hg (3 in. Hg) absolute at the time sampling is commenced.) Record the volume of the flask and valve (V_f), the flask temperature (T_i), and the barometric pressure. Turn the flask valve counterclockwise to its ''purge'' position and do the same with the pump valve. Purge the probe and the vacuum tube using the squeeze bulb. If condensation occurs in the probe and the flask valve area, heat the probe and purge until the condensation disappears. Next, turn the pump valve to its ''vent'' position. Turn the flask valve clockwise to its ''evacuate'' position and record the difference in the mercury levels in the manometer. The absolute internal pressure in the flask (P_i) is equal to the barometric pressure less the manometer reading. Immediately turn the flask valve to the ''sample'' position and permit the gas to enter the flask until pressures in the flask and sample line (i.e., duct, stack) are equal. This will usually require about 15 seconds; a longer period indicates a ''plug'' in the probe, which must be corrected before sampling is continued. After collecting the sample, turn the flask valve to its ''purge'' position and disconnect the flask from the sampling train. Shake the flask for at least 5 minutes.

4.1.2 If the gas being sampled contains insufficient oxygen for the conversion of NO to NO_2 (e.g., an applicable subpart of the standard may require taking a sample of a calibration gas mixture of NO in N_2), then oxygen shall be introduced into the flask to permit this conversion. Oxygen may be introduced into the flask by one of three methods; (1) Before evacuating the sampling flask, flush with pure cylinder oxygen, then evacuate flask to 75 mm Hg (3 in. Hg) absolute pressure or less; or (2) inject oxygen into the flask after sampling; or (3) terminate sampling with a minimum of 50 mm Hg (2 in. Hg) vacuum remaining in the flask, record this final pressure, and then vent the flask to the atmosphere until the flask pressure is almost equal to atmospheric pressure.

4.2 Sample Recovery. Let the flask set for a minimum of 16 hours and then shake the contents for 2 minutes. Connect the flask to a mercury filled U-tube manometer. Open the valve from the flask to the manometer and record the flask temperature (T_f), the barometric pressure, and the difference between the mercury levels in the manometer. The absolute internal pressure in the flask (P_f) is the barometric pressure less the manometer reading. Transfer the contents of the flask to a leak-free polyethylene bottle. Rinse the flask twice with 5-ml portions of deionized, distilled water and add the rinse water to the bottle. Adjust the pH to between 9 and 12 by adding sodium hydroxide (1 N), dropwise (about 25 to 35 drops). Check the pH by dipping a stirring rod into the solution and then touching the rod to the pH test paper. Remove as little material as possible during this step. Mark the height of the liquid level so that the container can be checked for leakage after transport. Label

the container to clearly identify its contents. Seal the container for shipping.

4.3 Analysis. Note the level of the liquid in container and confirm whether or not any sample was lost during shipment; note this on the analytical data sheet. If a noticeable amount of leakage has occurred, either void the sample or use methods, subject to the approval of the Administrator, to correct the final results. Immediately prior to analysis, transfer the contents of the shipping container to a 50-ml volumetric flask, and rinse the container twice with 5-ml portions of deionized, distilled water. Add the rinse water to the flask and dilute to the mark with deionized, distilled water; mix thoroughly. Pipette a 25-ml aliquot into the procelain evaporating dish. Return any unused portion of the sample to the polyethylene storage bottle. Evaporate the 25-ml aliquot to dryness on a steam bath and allow to cool. Add 2 ml phenoldisulfonic acid solution to the dried residue and triturate thoroughly with a polyethylene policeman. Make sure the solution contacts all the residue. Add 1 ml deionized, distilled water and four drops of concentrated sulfuric acid. Heat the solution on a steam bath for 3 minutes with occasional stirring. Allow the solution to cool, add 20 ml deionized, distilled water, mix well by stirring, and add concentrated ammonium hydroxide, dropwise, with constant stirring, until the pH is 10 (as determined by pH paper). If the sample contains solids, these must be removed by filtration (centrifugation is an acceptable alternative, subject to the approval of the Administrator), as follows: filter through Whatman No. 41 filter paper into a 100-ml volumetric flask; rinse the evaporating dish with three 5-ml portions of deionized, distilled water; filter these three rinses. Wash the filter with at least three 15-ml portions of deionized, distilled water. Add the filter washings to the contents of the volumetric flask and dilute to the mark with deionized, distilled water. If solids are absent, the solution can be transferred directly to the 100-ml volumetric flask and diluted to the mark with deionized, distilled water. Mix the contents of the flask thoroughly, and measure the absorbance at the optimum wavelength used for the standards (Section 5.2.1), using the blank solution as a zero reference. Dilute the sample and the blank with equal volumes of deionized, distilled water if the absorbance exceeds A_4, the absorbance of the 400 μg NO_2 standard (see Section 5.2.2).

4.4 Audit Sample Analysis. Concurrently analyze the two audit samples and a set of compliance samples (Section 4.3) in the same manner to evaluate the technique of the analyst and the standards preparation. (NOTE: It is recommended that known quality control samples be analyzed prior to the compliance and audit sample analysis to optimize the system accuracy and precision. One source of these samples is the Source Branch listed in Section 3.3.9.) The same analysts, analytical reagents, and analytical system shall be used both for the compliance samples and the EPA audit samples; if this condition is met, auditing of subsequent compliance analyses for the same enforcement agency within 30 days is not required. An audit sample set may not be used to validate different sets of compliance samples under the jurisdiction of different enforcement agencies, unless prior arrangements are made with both enforcement agencies.

Calculate the concentrations in mg/dscm using the specified sample volume in the audit instructions. (NOTE: Indication of acceptable results may be obtained immediately by reporting the audit results in mg/dscm and compliance results in total μg NO_2/sample by telephone to the responsible enforcement agency.) Include the results of both audit samples, their identification numbers, and the analyst's name with the results of the compliance determination samples in appropriate reports to the EPA regional office or the appropriate enforcement agency. Include this information with subsequent compliance analyses for the same enforcement agency during the 30-day period.

The concentrations of the audit samples obtained by the analyst shall agree within 10 percent of the actual audit concentrations. If the 10-percent specification is not met, reanalyze the compliance samples and audit samples and include initial and reanalysis values in the test report (see NOTE in the first paragraph of this section).

Failure to meet the 10-percent specification may require retests until the audit problems are resolved. However, it the audit results do not affect the compliance or noncompliance status of the affected facility, the Administrator may waive the reanalysis requirement, further audits, or retests and accept the results of the compliance test. While steps are being taken to resolve audit analysis problems, the Administrator may also choose to use the data to determine the compliance or noncompliance status of the affected facility.

5. *Calibration*

5.1 Flask Volume. The volume of the collection flask-flask valve combination must be known prior to sampling. Assemble the flask and flask valve and fill with water, to the stopcock. Measure the volume of water to ±10 ml. Record this volume on the flask.

5.2 Spectrophotometer Calibration.

5.2.1 Optimum Wavelength Determination. Calibrate the wavelength scale of the spectrophotometer every 6 months. The calibration may be accomplished by using an energy source with an intense line emission such as a mercury lamp, or by using a series of glass filters spanning the measuring range

of the spectrophotometer. Calibration materials are available commercially and from the National Bureau of Standards. Specific details on the use of such materials should be supplied by the vendor; general information about calibration techniques can be obtained from general reference books on analytical chemistry. The wavelength scale of the spectrophotometer must read correctly within ±5 nm at all calibration points; otherwise, the spectrophotometer shall be repaired and recalibrated. Once the wavelength scale of the spectrophotometer is in proper calibration, use 410 nm as the optimum wavelength for the measurement of the absorbance of the standards and samples.

Alternatively, a scanning procedure may be employed to determine the proper measuring wavelength. If the instrument is a double-beam spectrophotometer, scan the spectrum between 400 and 415 nm using a 200 µg NO_2 standard solution in the sample cell and a blank solution in the reference cell. If a peak does not occur, the spectrophotometer is probably malfunctioning and should be repaired. When a peak is obtained within the 400 to 415 nm range, the wavelength at which this peak occurs shall be the optimum wavelength for the measurement of absorbance of both the standards and the samples. For a single-beam spectrophotometer, follow the scanning procedure described above, except that the blank and standard solutions shall be scanned separately. The optimum wavelength shall be the wavelength at which the maximum difference in absorbance between the standard and the blank occurs.

5.2.2 Determination of Spectrophotometer Calibration Factor K_c. Add 0.0 ml, 2 ml, 4 ml, 6 ml., and 8 ml of the KNO_3 working standard solution (1 ml=100 µg NO_2) to a series of five 50-ml volumetric flasks. To each flask, add 25 ml of absorbing solution, 10 ml deionized, distilled water, and sodium hydroxide (1 N) dropwise until the pH is between 9 and 12 (about 25 to 35 drops each). Dilute to the mark with deionized, distilled water. Mix thoroughly and pipette a 25-ml aliquot of each solution into a separate porcelain evaporating dish. Beginning with the evaporation step, follow the analysis procedure of Section 4.3 until the solution has been transferred to the 100 ml volumetric flask and diluted to the mark. Measure the absorbance of each solution, at the optimum wavelength, as determined in Section 5.2.1. This calibration procedure must be repeated on each day that samples are analyzed. Calculate the spectrophotometer calibration factor as follows:

$$K_c = 100\frac{A_1 + 2A_2 + 3A_3 + 4A_4}{A_1^2 + A_2^2 + A_3^2 + A_4^2} \quad \text{Eq. 7-1}$$

Where:

K_c=Calibration factor, µg.

A_1=Absorbance of the 100-µg NO_2 standard.

A_2=Absorbance of the 200-µg NO_2 standard.

A_3=Absorbance of the 300-µg NO_2 standard.

A_4=Absorbance of the 400-µg NO_2 standard.

5.2.3 Spectrophotometer Calibration Quality Control. Multiply the absorbance value obtained for each standard by the K_c factor (least squares slope) to determine the distance each calibration point lies from the theoretical calibration line. These calculated concentration values should not differ from the actual concentrations (i.e., 100, 200, 300, and 400 µg NO_2) by more than 7 percent for three of the four standards.

5.3 Barometer. Calibrate against a mercury barometer.

5.4 Temperature Gauge. Calibrate dial thermometers against mercury-in-glass thermometers.

5.5 Vacuum Gauge. Calibrate mechanical gauges, if used, against a mercury manometer such as that specified in 2.1.6.

5.6 Analytical Balance. Calibrate against standard weights.

6. *Calculations*

Carry out the calculations, retaining at least one extra decimal figure beyond that of the acquired data. Round off figures after final calculations.

6.1 Nomenclature.

A=Absorbance of sample.

C=Concentration of NO_x as NO_2, dry basis, corrected to standard conditions, mg/dscm (lb/dscf).

F=Dilution factor (i.e., 25/5, 25/10, etc., required only if sample dilution was needed to reduce the absorbance into the range of calibration).

K_c=Spectrophotometer calibration factor.

m=Mass of NO_x as NO_2 in gas sample, µg.

P_f=Final absolute pressure of flask, mm Hg (in. Hg).

P_i=Initial absolute pressure of flask, mm Hg (in. Hg).

P_{std}=Standard absolute pressure, 760 mm Hg (29.92 in. Hg).

T_f=Final absolute temperature of flask, °K (°R).

T_i=Initial absolute temperature of flask, °K (°R).

T_{std}=Standard absolute temperature 293°K (528°R).

V_{sc}=Sample volume at standard conditions (dry basis), ml.

V_f=Volume of flask and valve, ml.

V_a=Volume of absorbing solution, 25 ml.

2=50/25, the aliquot factor. (If other than a 25-ml aliquot was used for analysis, the corresponding factor must be substituted).

6.2 Sample Volume, Dry Basis, Corrected to Standard Conditions.

$$V_{sc} = (T_{std}/P_{std})(V_f - V_a)(P_f/T_f - P_i/T_i)$$
$$= K_1\,(V_f - 25\text{ ml})(P_f/T_f - P_i/T_i) \quad \text{Eq. 7–2}$$

Where:

K_1=0.3858°K/mm Hg for metric units

=17.64 °R/in. Hg for English units.

6.3 Total μg NO_2 Per Sample.

$$m = 2K_c\ A\ F \qquad \text{Eq. 7–3}$$

NOTE: If other than a 25-ml aliquot is used for analysis, the factor 2 must be replaced by a corresponding factor.

6.4 Sample Concentration, Dry Basis, Corrected to Standard Conditions.

$$C = K_2 \frac{m}{V_{sc}}$$

Equation 7-4

Where:

$K_2 = 10^3$ (mg/scm)/(μg/ml) for metric units.

$= 6.242 \times 10^{-5}$ (lb/scf)/(μg/ml) for English units.

To convert from mg/dscm to g/dscm, divide C by 1,000.

6.5 Relative Error (RE) for QA Audit Samples, Percent.

$$RE = \frac{C_d - C_a}{C_a}(100) \qquad \text{Eq. 7-5}$$

Where:

C_d=Determined audit sample concentration, mg/dscm.

C_a=Actual audit sample concentration, mg/dscm.

7. *Bibliography*

1. Standard Methods of Chemical Analysis 6th ed. New York, D. Van Nostrand Co., Inc. 1962. Vol. 1, p. 329–330.

2. Standard Method of Test for Oxides of Nitrogen in Gaseous Combustion Products (Phenoldisulfonic Acid Procedure). In: 1968 Book of ASTM Standards, Part 26. Philadelphia, PA. 1968. ASTM Designation D–1608–60, p. 725–729.

3. Jacob, M. B. The Chemical Analysis of Air Pollutants. New York. Interscience Publisher, Inc. 1960. Vol. 10, p. 351–356.

4. Beatty, R. L., L. B. Berger, and H. H. Schrenk. Determination of Oxides of Nitrogen by the Phenoldisulfonic Acid Method. Bureau of Mines, U.S. Dept. of Interior. RI. 3687. February 1943.

5. Hamil, H. F. and D. E. Camann. Collaborative Study of Method for the Determination of Nitrogen Oxide Emissions from Stationary Sources (Fossil Fuel-Fired Steam Generators). Southwest Research Institute report for Environmental Protection Agency. Research Triangle Park, NC. October 5, 1973.

6. Hamil, H. F. and R. E. Thomas. Collaborative Study of Method for the Determination of Nitrogen Oxide Emissions from Stationary Sources (Nitric Acid Plants). Southwest Research Institute report for Environmental Protection Agency. Research Triangle Park, NC. May 8, 1974.

METHOD 7A—DETERMINATION OF NITROGEN OXIDE EMISSIONS FROM STATIONARY SOURCES—ION CHROMATOGRAPHIC METHOD

1. *Applicability and Principle*

1.1 Applicability. This method applies to the measurement of nitrogen oxides emitted from stationary sources; it may be used as an alternative to Method 7 (as defined in 40 CFR Part 60.8(b)) to determine compliance if the stack concentration is within the analytical range. The analytical range of the method is from 125 to 1,250 mg NO_x/m^3 as NO_2 (65 to 655 ppm), and higher concentrations may be analyzed by diluting the sample. The lower detection limit is approximately 19 mg/m^3 (10 ppm), but may vary among instruments.

1.2 Principle. A grab sample is collected in an evacuated flask containing a diluted sulfuric acid-hydrogen peroxide absorbing solution. The nitrogen oxides, except nitrous oxide, are oxidized to nitrate and measured by ion chromatography.

2. *Apparatus*

2.1 Sampling. Same as in Method 7, Section 2.1.

2.2 Sampling Recovery. Same as in Method 7, Section 2.2, except the stirring rod and pH paper are not needed.

2.3 Analysis. For the analysis, the following equipment is needed. Alternative instrumentation and procedures will be allowed provided the calibration precision in Section 5.2 and acceptable audit accuracy can be met.

2.3.1 Volumetric Pipets. Class A; 1-, 2-, 4-, 5-ml (two for the set of standards and one per sample), 6-, 10-, and graduated 5-ml sizes.

2.3.2 Volumetric Flasks. 50–ml (two per sample and one per standard), 200-ml, and 1-liter sizes.

2.3.3 Analytical Balance. To measure to within 0.1 mg.

2.3.4 Ion Chromatograph. The ion chromatograph should have at least the following components:

2.3.4.1 Columns. An anion separation or other column capable of resolving the nitrate ion from sulfate and other species present and a standard anion suppressor column (optional). Suppressor columns are produced as proprietary items; however, one can be produced in the laboratory using the resin available from BioRad Company, 32nd and Griffin Streets, Richmond, CA. Peak resolution can be optimized by varying the efluent strength or column flow rate, or by experimenting with alternative columns that may offer more efficient separation. When using guard columns with the stronger reagent to protect the separation column, the analyst should allow rest periods between injection intervals to purge possible sulfate buildup in the guard column.

2.3.4.2 Pump. Capable of maintaining a steady flow as required by the system.

2.3.4.3 Flow Gauges. Capable of measuring the specified system flow rate.

2.3.4.4 Conductivity Detector.

2.3.4.5 Recorder. Compatible with the output voltage range of the detector.

3. *Reagents*

Unless otherwise indicated, it is intended that all reagents conform to the specifications established by the Committee on Analytical Reagents of the American Chemical Society, where such specifications are available; otherwise, use the best available grade.

3.1 Sampling. An absorbing solution consisting of sulfuric acid (H_2SO_4) and hydrogen peroxide (H_2O_2) is required for sampling. To prepare the absorbing solution, cautiously add 2.8 ml concentrated H_2SO_4 to a 1-liter flask containing water (same as Section 3.2). Add 6 ml of 3 percent H_2O_2 that has been freshly prepared from 30 percent solution. Dilute to volume with water, and mix well. This absorbing solution should be used within 1 week of its preparation. Do not expose to extreme heat or direct sunlight.

NOTE: Biased testing results have been observed when sampling under conditions of high sulfur dioxide concentrations (above 2000 ppm).

3.2 Sample Recovery. Deionized distilled water that conforms to American Society for Testing and Materials Specification D 1193–74, Type 3, is required for sample recovery. At the option of the analyst, the $KMnO_4$ test for oxidizable organic matter may be omitted when high concentrations of organic matter are not expected to be present.

3.3 Analysis. For the analysis, the following reagents are required:

3.3.1 Water. Same as in Section 3.2.

3.3.2 Stock Standard Solution, 1 mg NO_2/ml. Dry an adequate amount of sodium nitrate ($NaNO_3$) at 105 to 110½ C for a minimum of 2 hours just before preparing the standard solution. Then dissolve exactly 1.847 g of dried $NaNO_3$ in water, and dilute to 1 liter in a volumetric flask. Mix well. This solution is stable for 1 month and should not be used beyond this time.

3.3.3 Working Standard Solution, 25µg/ml. Dilute 5 ml of the standard solution to 200 ml with water in a volumetric flask, and mix well.

3.3.4 Eluent Solution. Weight 1.018 g of sodium carbonate (Na_2CO_3) and 1.008 g of sodium bicarbonate ($NaHCO_3$), and dissolve in 4 liters of water. This solution is 0.0024 M Na_2CO_3/0.003 M $NaHCO_3$. Other eluents appropriate to the column type and capable of resolving nitrate ion from sulfate and other species present may be used.

3.3.5 Quality Assurance Audit Samples. Same as required in Method 7.

4. *Procedure*

4.1 Sampling. Same as in Method 7, Section 4.1.

4.2 Sample Recovery. Same as in Method 7, Section 4.2, except delete the steps on adjusting and checking the pH of the sample. Do not store the samples more than 4 days between collection and recovery.

4.3 Sample. Preparation. the level of the liquid in the container and confirm whether any sample was lost during shipment; note this on the analytical data sheet. If a noticeable amount of leakage has occurred, either void the sample or use methods, subject to the approval of the Administrator, to correct the final results. Immediately before analysis, transfer the contents of the shipping container to a 50-ml volumetric flask, and rinse the container twice with 5-ml portions of water. Add the rinse water to the flask, and dilute to the mark with water. Mix thoroughly.

Pipet a 5-ml aliquot of the sample into a 50-ml volumetric flask, and dilute to the mark with water. Mix thoroughly. For each set of determinations, prepare a reagent blank by diluting 5 ml of absorbing solution to 50 ml with water. (Alternatively, eluent solution may be used in all sample, standard, and blank dilutions.)

4.4 Analysis. Prepare a standard calibration curve according to Section 5.2. Analyze the set of standards followed by the set of samples using the same injection volume for both standards and samples. Repeat this analysis sequence followed by a final analysis of the standard set. Average the results. The two sample values must agree within 5 percent of their mean for the analysis to be valid. Perform this duplicate analysis sequence on the same day. Dilute any sample and the blank with equal volumes of water if the concentration exceeds that of the highest standard.

Document each sample chromatogram by listing the following analytical parameters: injection point, injection volume, nitrate and sulfate retention times, flow rate, detector sensitivity setting, and recorder chart speed.

4.5 Audit Sample Analysis. Same as required in Method 7.

5. *Calibration*

5.1 Flask Volume. Same as in Method 7, Section 5.1.

5.2 Standard Calibration Curve. Prepare a series of five standards by adding 1.0, 2.0, 4.0, 6.0, and 10.0 ml of working standard solution (25µg/ml) to a series of five 50-ml volumetric flasks. (The standard masses will equal 25, 50, 100, 150, and 250µg.) Dilute each flask to volume with water, and mix well. Analyze with the samples as described in Section 4.4 and subtract the blank from each value. Prepare or calculate a linear regression plot to the standard masses in µg (x-axis) versus their peak height responses in millimeters (y-axis). (Take peak height measurements with symmetrical peaks; in all other cases,

calculate peak areas.) From this curve, or equation, determine the slope, and calculate its reciprocal to denote as the calibration factor, S. If any point deviates from the line by more than 7 percent of the concentration at that point, remake and reanalyze that standard. This deviation can be determined by multiplying S times the peak height response for each standard. The resultant concentrations must not differ by more than 7 percent from each known standard mass (i.e., 25, 50, 100, 150, and 250µg).

5.3 Conductivity Detector. Calibrate according to manufacturer's specifications prior to initial use.

5.4 Barometer. Calibrate against a mercury barometer.

5.5 Temperature Gauge. Calibrate dial thermometers against mercury-in-glass thermometers.

5.6 Vacuum Gauge. Calibrate mechanical gauges, if used, against a mercury manometer such as that specified in Section 2.1.6 of Method 7.

5.7 Analytical Balance. Calibrate against standard weights.

6. *Calculations*

Carry out the calculations, retaining at least one extra decimal figure beyond that of the acquired data. Round off figures after final calculations.

6.1 Sample Volume. Calculate the sample volume V_{sc} (in ml) on a dry basis, corrected to standard conditions, using Equation 7–2 of Method 7.

6.2 Sample Concentration of NO_x as NO_2. Calculate the sample concentration C (in mg/dscm) as follows:

$$C = \frac{HSF \times 10^4}{V_{sc}} \qquad \text{Eq. 7A-1}$$

Where:

H = Sample peak height, mm.
S = Calibration factor, µg/mm.
F = Dilution factor (required only if sample dilution was needed to reduce the concentration into the range of calibration)
10^4 = 1:10 dilution times conversion factor of

$$\frac{mg}{10^3 \mu g} \times \frac{10^6 ml}{m^3}$$

To convert from mg/dscm to g/dscm, divide C by 1000.

If desired, the concentration of NO_2 may be calculated as ppm NO_2 at standard conditions as follows:

$$\text{ppm } NO_2 = 0.5228\ C \qquad \text{Eq. 7A-2}$$

Where:

0.5228 = ml/mg NO_2.

7. *Bibliography*

1. Mulik, J. D. and E. Sawicki. Ion Chromatographic Analysis of Environmental Pollutants. Ann Arbor, Ann Arbor Science Publishers, Inc. Vol. 2, 1979.

2. Sawicki, E., J. D. Mulik, and E. Wittgenstein. Ion Chromatographic Analysis of Environmental Pollutants. Ann Arbor, Ann Arbor Science Publishers, Inc. Vol. 1. 1978.

3. Siemer, D. D. Separation of Chloride and Bromide from Complex Matrices Prior to Ion Chromatographic Determination. Analytical Chemistry 52(12:1874–1877). October 1980.

4. Small, H., T. S. Stevens, and W. C. Bauman. Novel Ion Exchange Chromatographic Method Using Conductimetric Determination. Analytical Chemistry. 47(11:1801). 1975.

5. Yu, King K. and Peter R. Westlin. Evaluation of Reference Method 7 Flask Reaction Time. Source Evaluation Society Newsletter. *4*(4). November 1979. 10 p.

METHOD 7B—DETERMINATION OF NITROGEN OXIDE EMISSIONS FROM STATIONARY SOURCES (ULTRAVIOLET SPECTROPHOTOMETRY)

1. *Applicability and Principle*

1.1 Applicability. This method is applicable to the measurement of nitrogen oxides emitted from nitric acid plants. The range of the method as outlined has been determined to be 57 to 1,500 milligrams NO_x (as NO_2) per dry standard cubic meter, or 30 to 786 ppm NO_x (as NO_2), assuming corresponding standards are prepared.

1.2 Principle. A grab sample is collected in an evacuated flask containing a dilute sulfuric acid-hydrogen peroxide absorbing solution; and the nitrogen oxides, except nitrous oxide, are measured by ultraviolet absorption.

2. *Apparatus*

2.1 Sampling. Same as Method 7, Section 2.1.1 through Section 2.1.11.

2.2 Sample Recovery. The following equipment is required for sample recovery:

2.2.1 Wash Bottle. Polyethylene or glass.

2.2.2 Volumetric Flasks. 100-ml (one for each sample).

2.3 Analysis. The following equipment is needed for analysis:

2.3.1 Volumetric Pipettes. 5-, 10-, 15-, and 20-ml to make standards and sample dilutions.

2.3.2 Volumetric Flasks. 1000- and 100-ml for preparing standards and dilution of samples.

2.3.3 Spectrophotometer. To measure ultraviolet absorbance at 210 nm.

2.3.4 Analytical Balance. To measure to within 0.1 mg.

3. *Reagents*

Unless otherwise indicated, all reagents are to conform to the specifications established by the committee on analytical reagents of the American Chemical Society, where such specifications are available. Otherwise, use the best available grade.

3.1 Sampling. Same as Method 7, Section 3.1. It is important that the amount of hydrogen peroxide in the absorbing solution not be increased. Higher concentrations of peroxide may interfere with sample analysis.

3.2 Sample Recovery. Same as for Method 7, Section 3.2.2.

3.3 Analysis. Same as for Method 7, Sections 3.3.4, 3.3.5, and 3.3.7 with the addition of the following:

3.3.1 Working Standard KNO_3 Solution. Dilute 10 ml of the standard solution to 1000 ml with water. One milliliter of the working standard is equivalent to 10 µg nitrogen dioxide (NO_2).

3.3.2 Absorbing Solution. Same as in Section 3.1.

3.3.3 Quality Assurance Audit Samples. Nitrate samples are prepared in glass vials by the Environmental Protection Agency (EPA), Environmental Monitoring Systems Laboratory, Research Triangle Park, North Carolina. Each set will consist of two vials with two unknown concentrations. When making compliance determinations, obtain the audit samples from the quality assurance management office at each EPA regional office.

4. *Procedures*

4.1 Sampling. Same as Method 7, Sections 4.1.1 and 4.1.2.

4.2 Sample Recovery. Let the flask sit for a minimum of 16 hours, and then shake the contents for 2 minutes. Connect the flask to a mercury filled U-tube manometer. Open the valve from the flask to the manometer, and record the flask temperature (T_f), the barometric pressure, and the difference between the mercury levels in the manometer. The absolute internal pressure in the flask (P_f) is the barometric pressure less the manometer reading.

Transfer the contents of the flask to a 100-ml volumetric flask. Rinse the flask three times with 10-ml portions of water, and add to the volumetric flask. Dilute to 100 ml with water. Mix thoroughly. The sample is now ready for analysis.

4.3 Analysis. Pipette a 20-ml aliquot of sample into a 100-ml volumetric flask. Dilute to 100 ml with water. The sample is now ready to be read by ultraviolet spectrophotometry. Using the blank as zero reference, read the absorbance of the sample at 210 nm.

4.4 Audit Analysis. With each set of compliance samples or once per analysis day, or once per week when averaging continuous samples, analyze each performance audit in the same manner as the sample to evaluate the analyst's technique and standard preparation. The same person, the same reagents, and the same analytical system must be used both for compliance determination samples and the EPA audit samples. Report the results of all audit samples with the results of the compliance determination samples. The relative error will be determined by the regional office or the appropriate enforcement agency.

5. *Calibration*

Same as Method 7, Section 5.1 and Sections 5.3 through 5.6 with the addition of the following:

5.1 Determination of Spectrophotometer Standard Curve. Add 0.0 ml, 5 ml, 10 ml, 15 ml, and 20 ml of the KNO_3 working standard solution (1 ml= 10 µg NO_2) to a series to five 100-ml volumetric flasks. To each flask, add 5 ml of absorbing solution. Dilute to the mark with water. The resulting solutions contain 0.0, 50, 100, 150, and 200 µg NO_2, respectively. Measure the absorbance by ultraviolet spectrophotometry at 210 nm, using the blank as a zero reference. Prepare a standard curve plotting absorbance vs. µg NO_2.

NOTE: If other than a 20-ml aliquot of sample is used for analysis, then the amount of absorbing solution in the blank and standards must be adjusted such that the same amount of absorbing solution is in the blank and standards as is in the aliquot of sample used. Calculate the spectrophotometer calibration factor K_c as follows:

$$K_c = \frac{\sum_{i=1}^{n} M_i A_i}{\sum_{i=1}^{n} A_i^2} \qquad \text{Eq. 7B-1}$$

Where:

m_i=Mass of NO_2 in standard i, µg.

A_i=Absorbance of NO_2 standard i.

N=Total number of calibration standards.

For the set of calibration standards specified here, Equation 7–1 simplifies to the following:

$$K_c = 50\frac{A_1 + 2A_2 + 3A_3 + 4A_4}{A_1^2 + A_2^2 + A_3^2 + A_4^2} \qquad \text{Eq. 7B-2}$$

6. *Calculations*

Same as Method 7, Sections 6.1, 6.2, and 6.4 with the addition of the following:

6.1 Total µg NO_2 Per Sample:

$$m = 5K_c\,AF \qquad \text{Eq. 7B–3}$$

Where:

5=100/20, the aliquot factor.

NOTE: If other than a 20-ml aliquot is used for analysis, the factor 5 must be replaced by a corresponding factor.

6.2 Relative Error (RE) for Quality Assurance Audits.

$$RE = \frac{C_d{}^{o}\ C_a}{C_a} \times 100 \qquad \text{Eq. 7B-4}$$

Where:

C_d=Determined audit concentration.
C_a=Actual audit concentration.

7. *Bibliography*

1. National Institute for Occupational Safety and Health Recommendations for Occupational Exposure to Nitric Acid. In: Occupational Safety and Health Reporter. Washington, DC. Bureau of National Affairs, Inc. 1976. p. 149.

2. Rennie, P.J., A.M. Sumner, and F.B. Basketter. ''Determination of Nitrate in Raw, Potable, and Waste Waters by Ultraviolet Spectrophotometry.'' ''Analyst.'' Vol. 104. September 1979. p. 837.

METHOD 7C—DETERMINATION OF NITROGEN OXIDE EMISSIONS FROM STATIONARY SOURCES—ALKALINE-PERMANGANATE/COLORIMETRIC METHOD

1. *Applicability, Principle, Interferences, Precision, Bias, and Stability*

1.1 Applicability. The method is applicable to the determination of NO_x emissions from fossil-fuel fired steam generators, electric utility plants, nitric acid plants, or other sources as specified in the regulations. The lower detectable limit is 13 mg NO_x/m^3, as NO_2 (7 ppm NO_x) when sampling at 500 cc/min for 1 hour. No upper limit has been established; however, when using the recommended sampling conditions, the method has been found to collect NO_x emissions quantitatively up to 1,782 mg NO_x/m^3, as NO_2 (932 ppm NO_x).

1.2 Principle. An integrated gas sample is extracted from the stack and collected in alkaline-potassium permanganate solution; NO_x ($NO+NO_2$) emissions are oxidized to NO_2^- and NO_3^-. The NO_3^- is reduced to NO_2^- with cadmium, and the NO_2^- is analyzed colorimetrically.

1.3 Interferences. Possible interferences are SO_2 and NH_3. High concentrations of SO_2 could interfere because SO_2 consumes MnO_4^- (as does NO_x) and, therefore, could reduce the NO_x collection efficiency. However, when sampling emissions from a coal-fired electric utility plant burning 2.1-percent sulfur coal with no control of SO_2 emissions, collection efficiency was not reduced. In fact, calculations show that sampling 3000 ppm SO_2 will reduce the MnO_4^- concentration by only 5 percent if all the SO_2 is consumed in the first impinger.

NH_3 is slowly oxidized to NO_3^- by the absorbing solution. At 100 ppm NH_3 in the gas stream, an interference of 6 ppm NO_x (11 mg NO_2/m^3) was observed when the sample was analyzed 10 days after collection. Therefore, the method may not be applicable to plants using NH_3 injection to control NO_x emissions unless means are taken to correct the results. An equation has been developed to allow quantitation of the interference and is discussed in Citation 5 of the Bibliography.

1.4 Precision and Bias. The method does not exhibit any bias relative to Method 7. The within-laboratory relative standard deviation for a single measurement is 2.8 and 2.9 percent at 201 and 268 ppm NO_x, respectively.

1.5 Stability. Collected samples are stable for at least 4 weeks.

2. *Apparatus*

2.1 Sampling and Sample Recovery. The sampling train is shown in Figure 7C–1, and component parts are discussed below. Alternative apparatus and procedures are allowed provided acceptable accuracy and precision can be demonstrated.

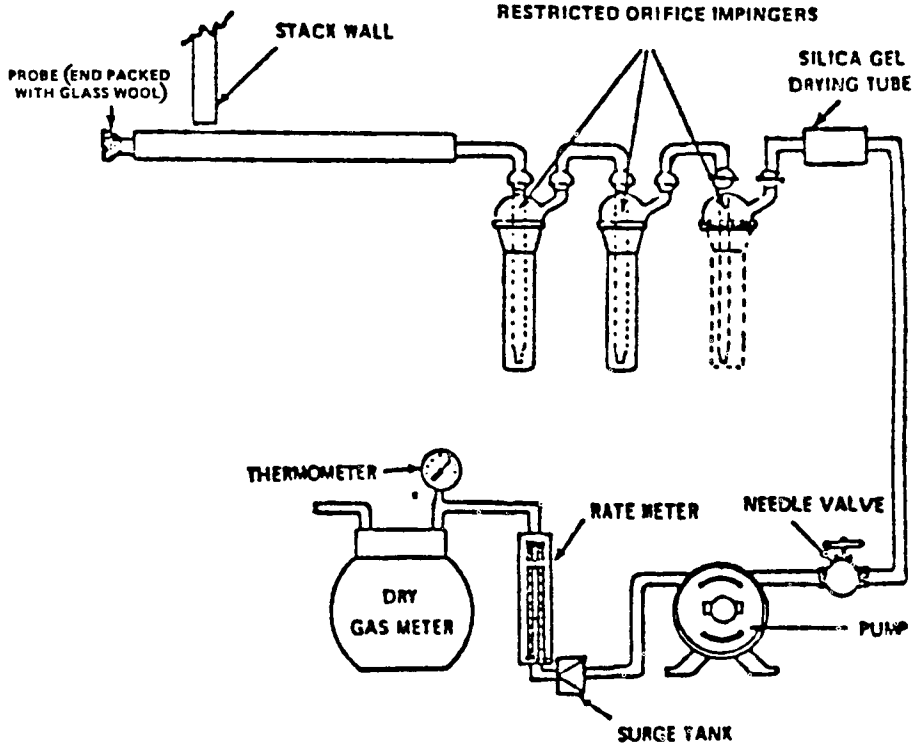

Figure 7C-1. NO_x sampling train.

2.1.1 Probe. Borosilicate glass tubing, sufficiently heated to prevent water condensation and equipped with an in-stack or out-stack filter to remove particulate matter (a plug of glass wool is satisfactory for this purpose). Stainless steel or Teflon tubing may also be used for the probe. (Note: Mention of trade names or specific products does not constitute endorsement by the U.S. Environmental Protection Agency.)

2.1.2 Impingers. Three restricted-orifice glass impingers, having the specifications given in Figure 7C–2, are required for each sampling train. The impingers must be connected in series with leak-free glass connectors. Stopcock grease may be used, if necessary, to prevent leakage. (The impingers can be fabricated by a glass blower until they become available commercially.)

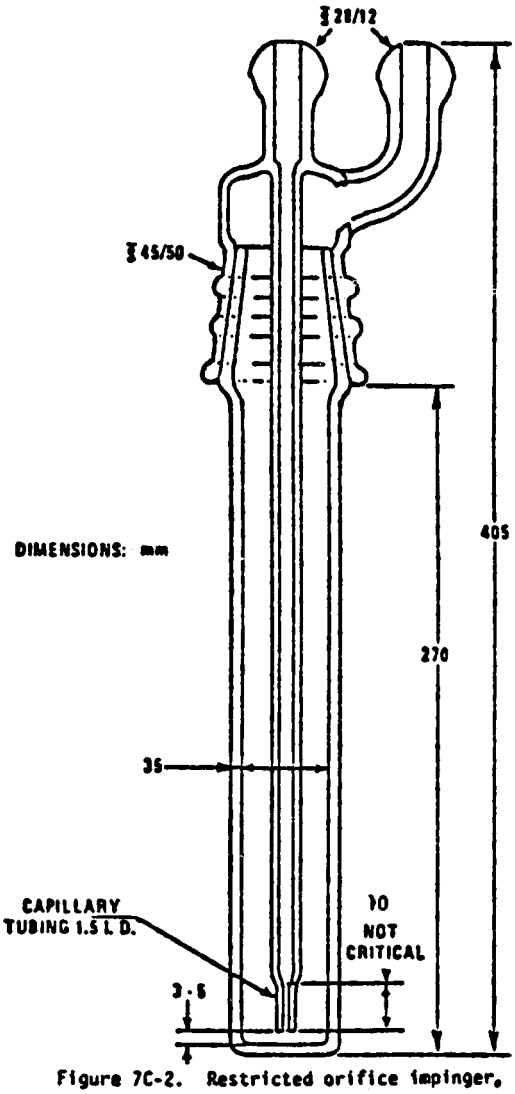

Figure 7C-2. Restricted orifice impinger.

2.1.3 Glass Wool, Stopcock Grease, Drying Tube, Valve, Pump, Barometer, and Vacuum Gauge and Rotameter. Same as in Method 6, Sections 2.1.3, 2.1.4, 2.1.6, 2.1.7, 2.1.8, 2.1.11, and 2.1.12, respectively.

2.1.4 Rate Meter. Rotameter, or equivalent, accurate to within 2 percent at the selected flow rate between 400 and 500 cc/min. For rotameters, a range of 0 to 1 liter/min is recommended.

2.1.5 Volume Meter. Dry gas meter capable of measuring the sample volume, under the sampling conditions of 400 to 500 cc/min for 60 minutes within an accuracy of 2 percent.

2.1.6 Filter. To remove NO_x from ambient air, prepared by adding 20 g of a 5-angstrom molecular sieve to a cylindrical tube, e.g., a polyethylene drying tube.

2.1.7 Polyethylene Bottles. 1-liter, for sample recovery.

2.1.8 Funnel and Stirring Rods. For sample recovery.

2.2 Sample Preparation and Analysis.

2.2.1 Hot Plate. Stirring type with 50- by 10-mm Teflon-coated stirring bars.

2.2.2 Beakers. 400-, 600-, and 1000-ml capacities.

2.2.3 Filtering Flask. 500-ml capacity with side arm.

2.2.4 Buchner Funnel. 75-mm ID, with spout equipped with a 13-mm ID by 90-mm long piece of Teflon tubing to minimize possibility of aspirating sample solution during filtration.

2.2.5 Filter Paper. Whatman GF/C, 7.0-cm diameter.

2.2.6 Stirring Rods.

2.2.7 Volumetric Flasks. 100-, 200- or 250-, 500-, and 1000-ml capacity.

2.2.8 Watch Glasses. To cover 600- and 1,000-ml beakers.

2.2.9 Graduated Cylinders. 50- and 250-ml capacities.

2.2.10 Pipettes. Class A

2.2.11 pH Meter. To measure pH from 0.5 to 12.0

2.2.12 Burette. 50-ml with a micrometer type stopcock. (The stopcock is Catalogue No. 8225–t–05, Ace Glass, Inc., Post Office Box 996, Louisville, Kentucky 50201.) Place a glass wool plug in bottom of burette. Cut off burette at a height of 43 cm from the top of plug, and have a glass blower attach a glass funnel to top of burette such that the diameter of the burette remains essentially unchanged. Other means of attaching the funnel are acceptable.

2.2.13 Glass Funnel. 75-mm ID at the top.

2.2.14 Spectrophotometer. Capable of measuring absorbance at 540 nm. One-cm cells are adequate.

2.2.15 Metal Thermometers. Bimetallic thermometers, range 0 to 150½ C.

2.2.16 Culture Tubes. 20- by 150-mm, Kimax No. 45048.

2.2.17 Parafilm ''M.'' Obtained from American Can Company, Greenwich, Connecticut 06830.

2.2.18 CO_2 Measurement Equipment. Same as in Method 3.

3. *Reagents*

Unless otherwise indicated, all reagents should conform to the specifications established by the Committee on Analytical Reagents of the American Chemical Society, where such specifications are available; otherwise, use the best available grade.

3.1 Sampling.

3.1.1 Water. Deionized distilled to conform to ASTM Specification D 1193–74, Type 3 (incorporated by reference—see §60.17).

3.1.2 Potassium Permanganate, 4.0 percent (w/w), Sodium Hydroxide, 2.0 percent (w/w). Dissolve 40.0 g of $KMnO_4$ and 20.0 g of NaOH in 940 ml of water.

3.2 Sample Preparation and Analysis.

3.2.1 Water. Same as in Section 3.1.1.

3.2.2 Sulfuric Acid. Concentrated H_2SO_4.

3.2.3 Oxalic Acid Solution. Dissolve 48 g of oxalic acid [$(COOH)_2 \bullet 2H_2O$] in water, and dilute to 500 ml. Do not heat the solution.

3.2.4 Sodium Hydroxide, 0.5 N. Dissolve 20 g of NaOH in water, and dilute to 1 liter.

3.2.5 Sodium Hydroxide, 10 N. Dissolve 40 g of NaOH in water and dilute to 100 ml.

3.2.6 Ethylenediamine Tetraacetic Acid (EDTA) Solution, 6.5 Percent. Dissolve 6.5 g of EDTA (disodium salt) in water, and dilute to 100 ml. Solution is best accomplished by using a magnetic stirrer.

3.2.7 Column Rinse Solution. Add 20 ml of 6.5 percent EDTA solution to 960 ml of water, and adjust the pH to 11.7 to 12.0 with 0.5 N NaOH.

3.2.8 Hydrochloric Acid (HCl), 2 N. Add 86 ml of concentrated HCl to a 500-ml volumetric flask containing water, dilute to volume, and mix well. Store in a glass-stoppered bottle.

3.2.9 Sulfanilamide Solution. Add 20 g of sulfanilamide (melting point 165 to 167 °C) to 700 ml of water. Add, with mixing, 50 ml concentrated phosphoric acid (85 percent), and dilute to 1000 ml. This solution is stable for at least 1 month, if refrigerated.

3.2.10 N-(1-Naphthyl)-Ethylenediamine Dihydrochloride (NEDA) Solution. Dissolve 0.5 g of NEDA in 500 ml of water. An aqueous solution should have one absorption peak at 320 nm over the range of 260 to 400 nm. NEDA, showing more than one absorption peak over this range, is impure and should not be used. This solution is stable for at least 1 month if protected from light and refrigerated.

3.2.11 Cadmium. Obtained from Matheson Coleman and Bell, 2909 Highland Avenue, Norwood, Ohio 45212, as EM Laboratories Catalogue No. 2001. Prepare by rinsing in 2 N HCl for 5 minutes until the color is silver-grey. Then rinse the cadmium with water until the rinsings are neutral when tested with pH paper. CAUTION: H_2 is liberated during preparation. Prepare in an exhaust hood away from any flame.

3.2.12 $NaNO_2$ Standard Solution, Nominal Concentration, 1000 µg NO_2^-/ml. Desiccate $NaNO_2$ overnight. Accurately weigh 1.4 to 1.6 g of $NaNO_2$ (assay of 97 percent $NaNO_2$ or greater), dissolve in water, and dilute to 1 liter. Calculate the exact NO_2^- concentration from the following relationship:

$$\mu g NO_2^- / ml = g \text{ of } NaNO_2 \times \frac{\text{purity, \%}}{100} \times 10^3 \times \frac{46.01}{69.01}$$

This solution is stable for at least 6 months under laboratory conditions.

3.2.13 KNO_3 Standard Solution. Dry KNO_3 at 110 °C for 2 hours, and cool in a desiccator. Accurately weigh 9 to 10 g of KNO_3 to within 0.1 mg, dissolve in water, and dilute to 1 liter. Calculate the exact NO_3^- concentration from the following relationship:

$$\mu g NO_{3^-} / ml = g \text{ of } KNO_3 \times 10^3 \times \frac{62.01}{101.10}$$

This solution is stable for 2 months without preservative under laboratory conditions.

3.2.14 Spiking Solution. Pipette 7 ml of the KNO_3 standard into a 100-ml volumetric flask, and dilute to volume.

3.2.15 Blank Solution. Dissolve 2.4 g of $KMnO_4$ and 1.2 g of NaOH in 96 ml of water. Alternatively, dilute 60 ml of $KMnO_4$/NaOH solution to 100 ml.

3.2.16 Quality Assurance Audit Samples. Same as in Method 7, Section 3.3.9. When requesting audit samples, specify that they be in the appropriate concentration range for Method 7C.

4. *Procedure*

4.1 Sampling.

4.1.1 Preparation of Collection Train. Add 200 ml of $KMnO_4$/NaOH solution (3.1.2) to each of three impingers, and assemble the train as shown in Figure 7C–1. Adjust probe heater to a temperature sufficient to prevent water condensation.

4.1.2 Leak-Check Procedure. A leak-check prior to the sampling run should be carried out; a leak-check after the sampling run is mandatory. Carry out the leak-check(s) according to Method 6, Section 4.1.2.

4.1.3 Check of Rotameter Calibration Accuracy (Optional). Disconnect the probe from the first impinger, and connect the filter (2.1.6). Start the pump, and adjust the rotameter to read between 400 and 500 cc/min. After the flow rate has stabilized, start measuring the volume sampled, as recorded by the dry gas meter (DGM), and the sampling time. Collect enough volume to measure accurately the flow rate, and calculate the flow rate. This average flow rate must be less than 500 cc/min for the sample to be valid; therefore, it is recommended that the flow rate be checked as above prior to each test.

4.1.4 Sample Collection. Record the initial DGM reading and barometric pressure. Determine the sampling point or points according to the appropriate regulations, e.g., §60.46(c) of 40 CFR Part 60. Position the tip of the probe at the sampling point, connect the probe to the first impinger, and start the pump. Adjust the sample flow to a value between 400 and 500 cc/min. CAUTION: HIGHER FLOW RATES WILL PRODUCE LOW RESULTS. Once adjusted, maintain a constant flow rate during the entire sampling run. Sample for 60 minutes. For relative accuracy (RA) testing of continuous emission monitors, the minimum sampling time is 1 hour, sampling 20 minutes at each traverse point. [NOTE.— When the SO_2 concentration is greater than 1200 ppm, the sampling time may have to be reduced to 30 minutes to eliminate plugging of the impinger orifice with MnO_2. For RA tests with SO_2 greater than 1200 ppm, sample for 30 minutes (10 minutes at each point)]. Record the DGM temperature, and check the flow rate at least every 5 minutes. At the conclusion of each run, turn off the pump, remove probe from the stack, and record the final readings. Divide the sample volume by the sampling time to determine the average flow rate. Conduct a leak-check as in Section 4.1.2. If a leak is found, void the test run, or use procedures acceptable to the Administrator to adjust the sample volume for the leakage.

4.1.5 CO_2 Measurement. During sampling, measure the CO_2 content of the stack gas near the sampling point using Method 3. The single-point grab sampling procedure is adequate, provided the measurements are made at least three times—near the start, midway, and before the end of a run and the average CO_2 concentration is computed. The Orsat or Fyrite analyzer may be used for this analysis.

4.2 Sample Recovery. Disconnect the impingers. Pour the contents of the impingers into a 1-liter polyethylene bottle using a funnel and a stirring rod (or other means) to prevent spillage. Complete the quantitative transfer by rinsing the impingers and connecting tubes with water until the rinsings are clear to light pink, and add the rinsings to the bottle. Mix the sample, and mark the solution level. Seal and identify the sample container.

4.3 Sample Preparation for Analysis. Prepare a cadmium reduction column as follows: Fill the burette (2.2.12) with water. Add freshly prepared cadmium slowly with tapping until no further settling occurs. The height of the cadmium column should be 39 cm. When not in use, store the column under rinse solution (3.2.7). (NOTE.— The column should not contain any bands of cadmium fines. This may occur if regenerated column is used and will greatly reduce the column lifetime.)

Note the level of liquid in the sample container, and determine whether any sample was lost during shipment. If a noticeable amount of leakage has occurred, the volume lost can be determined from the difference between initial and final solution levels, and this value can then be used to correct the analytical result. Quantitatively transfer the contents to a 1-liter volumetric flask, and dilute to volume.

Take a 100-ml aliquot of the sample and blank (unexposed $KMnO_4$/NaOH) solutions, and transfer to 400-ml beakers containing magnetic stirring bars. Using a pH meter,

add concentrated H_2SO_4 with stirring until a pH of 0.7 is obtained. Allow the solutions to stand for 15 minutes. Cover the beakers with watch glasses, and bring the temperature of the solutions to 50 °C. Keep the temperature below 60 °C. Dissolve 4.8 g of oxalic acid in a minimum volume of water, approximately 50 ml, at room temperature. Do not heat the solution. Add this solution slowly, in increments, until the $KMnO_4$ solution becomes colorless. If the color is not completely removed, prepare some more of the above oxalic acid solution, and add until a colorless solution is obtained. Add an excess of oxalic acid by dissolving 1.6 g of oxalic acid in 50 ml of water, and add 6 ml of this solution to the colorless solution. If suspended matter is present, add concentrated H_2SO_4 until a clear solution is obtained.

Allow the samples to cool to near room temperature, being sure that the samples are still clear. Adjust the pH to 11.7 to 12.0 with 10 N NaOH. Quantitatively transfer the mixture to a Buchner funnel containing GF/C filter paper, and filter the precipitate. Filter the mixture into a 500-ml filtering flask. Wash the solid material four times with water. When filtration is complete, wash the Teflon tubing, quantitatively transfer the filtrate to a 500-ml volumetric flask, and dilute to volume. The samples are now ready for cadmium reduction. Pipette a 50-ml aliquot of the sample into a 150-ml beaker, and add a magnetic stirring bar. Pipette in 1.0 ml of 6.5 percent EDTA solution, and mix.

Determine the correct stopcock setting to establish a flow rate of 7 to 9 ml/min of column rinse solution through the cadmium reduction column. Use a 50-ml graduated cylinder to collect and measure the solution volume. After the last of the rinse solution has passed from the funnel into the burette, but before air entrapment can occur, start adding the sample, and collect it in a 250-ml graduated cylinder. Complete the quantitative transfer of the sample to the column as the sample passes through the column. After the last of the sample has passed from the funnel into the burette, start adding 60 ml of column rinse solution, and collect the rinse solution until the solution just disappears from the funnel. Quantitatively transfer the sample to a 200-ml volumetric flask (250-ml may be required), and dilute to volume. The samples are now ready for NO_2^- analysis. [NOTE.— Both the sample and blank should go through this procedure. Additionally, two spiked samples should be run with every group of samples passed through the column. To do this, prepare two additional 50–ml aliquots of the sample suspected to have the highest NO_3^- concentration, and add 1 ml of the spiking solution to these aliquots. If the spike recovery or column efficiency (see 6.2.1) is below 95 percent, prepare a new column, and repeat the cadmium reduction].

4.4 Sample Analysis. Pipette 10 ml of sample into a culture tube. (NOTE.— Some test tubes give a high blank NO_2^- value but culture tubes do not.) Pipette in 10 ml of sulfanilamide solution and 1.4 ml of NEDA solution. Cover the culture tube with parafilm, and mix the solution. Prepare a blank in the same manner using the sample from treatment of the unexposed $KMnO_4$/NaOH solution (3.1.2). Also, prepare a calibration standard to check the slope of the calibration curve. After a 10-minute color development interval, measure the absorbance at 540 nm against water. Read µg NO_2^-/ml from the calibration curve. If the absorbance is greater than that of the highest calibration standard, pipette less than 10 ml of sample and enough water to make the total sample volume 10 ml, and repeat the analysis. Determine the NO_2 concentration using the calibration curve obtained in Section 5.3.

4.5 Audit Analysis. This is the same as in Method 7, Section 4.4.

5. *Calibration*

5.1 Dry Gas Metering System (DGM).

5.1.1 Initial Calibration. Same as in Method 6, Section 5.1.1. For detailed instructions on carrying out this calibration, it is suggested that Section 3.5.2 of Citation 4 in the Bibiography be consulted.

5.1.2 Post-Test Calibration Check. Same as in Method 6, Section 5.1.2.

5.2 Thermometers for DGM and Barometer. Same as in Method 6, Sections 5.2 and 5.4, respectively.

5.3 Calibration Curve for Spectrophotometer. Dilute 5.0 ml of the $NaNO_2$ standard solution to 200 ml with water. This solution nominally contains 25 µg NO_2^-/ml. Use this solution to prepare calibration standards to cover the range of 0.25 to 3.00 µg NO_2^-/ml. Prepare a minimum of three standards each for the linear and slightly nonlinear (described below) range of the curve. Use pipettes for all additions.

Run standards and a water blank as instructed in Section 4.4. Plot the net absorbance vs µgNO_2^-/ml. Draw a smooth curve through the points. The curve should be linear up to an absorbance of approximately 1.2 with a slope of approximately 0.53 absorbance units/µg NO_2^-/ml. The curve should pass through the origin. The curve is slightly nonlinear from an absorbance of 1.2 to 1.6.

6. *Calculations*

Carry out calculations, retaining at least one extra decimal figure beyond that of the acquired data. Round off figures after final calculation.

6.1 Sample volume, dry basis, corrected to standard conditions.

$$V_{m(std)} = V_m XY \frac{T_{std}}{T_m} \frac{P_{bar}}{P_{std}} = K_1 XY \frac{V_m P_{bar}}{T_m} \qquad \text{Eq. 7C-1}$$

Where:

$V_{m(std)}$=Dry gas volume measured by the dry gas meter, corrected to standard conditions, dscm.

V_m=Dry gas volume as measured by the dry gas meter, dcm.

Y=Dry gas meter calibration factor.

X=Correction factor for CO_2 collection.

$$= \frac{100}{100 - \%CO_2(v/v)}$$

P_{bar}=Barometric pressure, mm Hg.

P_{std}=Standard absolute pressure, 760 mm Hg.

T_m=Average dry gas meter absolute temperature, °K.

T_{std}=Standard absolute temperature, 293 °K.

K_1=0.3858 °K/mm Hg.

6.2 Total µg NO_2 Per Sample.

6.2.1 Efficiency of Cadmium Reduction Column. Calculate this value as follows:

$$E = \frac{(x - y)\ 200}{s \times 1.0 \times \frac{46.01}{62.01}} = \frac{269.6\ (x - y)}{s} \qquad \text{(Eq. 7C-2)}$$

Where:

E=Column efficiency, unitless.

x=Analysis of spiked sample, µg NO_2^-/ml.

y=Analysis of unspiked sample, µg NO_2^-/ml.

200=Final volume of sample and blank after passing through the column, ml.

s=Concentration of spiking solution, µg NO_3^-/ml.

1.0=Volume of spiking solution added, ml.

46.01=µg NO_2^-/µ mole.

62.01=µg NO_3^-/µ mole.

6.2.2 Total µg NO_2^-.

$$m = \frac{(S - B)}{E} \times 200 \times \frac{500}{50} \times \frac{1000}{100} = \frac{(2 \times 10^4)(S - B)}{E} \qquad \text{Eq. 7C-3}$$

Where:

m=Mass of NO_x, as NO_2, in sample, µg.

S=Analysis of sample, µg NO_2^-/ml.

B=Analysis of blank, µg NO_2^-/ml.

500=Total volume of prepared sample, ml.

50=Aliquot of prepared sample processed through cadmium column, ml.

100=Aliquot of $KMnO_4$/NaOH solution, ml.

1000=Total volume of $KMnO_4$/NaOH solution ml.

6.3 Sample Concentration.

$$C = K_2 \frac{m}{V_{m(std)}}$$

Where:

C=Concentration of NO_x as NO_2, dry basis, mg/dscm.

K_2=10^{-3} mg/µg.

6.4 Conversion Factors.

1.0 ppm NO=1.247 mg NO/m^3 at STP.

1.0 ppm NO_2=1.912 mg NO_2/m^3 at STP.

1 ft^3=2.832×10^{-2} m^3.

1000 mg = 1 g.

7. *Quality Control*

Quality control procedures are specified in Sections 4.1.3 (flow rate accuracy); 4.3 (cadmium column efficiency); 4.4 (calibration

curve accuracy); and 4.5 (audit analysis accuracy).

8. *Bibliography*

1. Margeson, J.H., W.J. Mitchell, J.C. Suggs, and M.R. Midgett. Integrated Sampling and Analysis Methods for Determining NO_x Emissions at Electric Utility Plants. U.S. Environmental Protection Agency, Research Triangle Park, NC. Journal of the Air Pollution Control Association. *32*:1210–1215. 1982.

2. Memorandum and attachment from J.H. Margeson, Source Branch, Quality Assurance Division, Environmental Monitoring Systems Laboratory, to The Record, EPA. March 30, 1983. NH_3 Interference in Methods 7C and 7D.

3. Margeson, J.H., J.C. Suggs, and M.R. Midgett. Reduction of Nitrate to Nitrite with Cadmium. Anal. Chem. *52*:1955–57. 1980.

4. Quality Assurance Handbook for Air Pollution Measurement Systems. Volume III—Stationary Source Specific Methods. August 1977. U.S. Environmental Protection Agency. Research Triangle Park, NC. Publication No. EPA–600/4–77–027b. August 1977.

5. Margeson, J.H., et al. An Integrated Method for Determining NO_x Emissions at Nitric Acid Plants. Manuscript submitted to Analytical Chemistry. April 1984.

METHOD 7D—DETERMINATION OF NITROGEN OXIDE EMISSIONS FROM STATIONARY SOURCES—ALKALINE-PERMANGANATE/ION CHROMATOGRAPHIC METHOD

1. *Applicability, Principle, Interferences, Precision, Bias, and Stability*

1.1 Applicability. The method is applicable to the determination of NO_x emissions from fossil-fuel fired steam generators, electric utility plants, nitric acid plants, or other sources as specified in the regulations. The lower detectable limit is similar to that for Method 7C. No upper limit has been established; however, when using the recommended sampling conditions, the method has been found to collect NO_x emissions quantitatively up to 1782 mg NO_x/m^3, as NO_2 (932 pm NO_x).

1.2 Principle. An integrated gas sample is extracted from the stack and collected in alkaline-potassium permanganate solution; NO_x ($NO+NO_2$) emissions are oxidized to NO_3^-. Then NO_3^- is analyzed by ion chromatography.

1.3 Interferences. Possible interferences are SO_2 and NH_3. High concentrations of SO_2 could interfere because SO_2 consumes MnO_4^- (as does NO_x) and, therefore, could reduce the NO_x collection efficiency. However, when sampling emissions from a coal-fired electric utility plant burning 2.1-percent sulfur coal with no control of SO_2 emissions, collection efficiency was not reduced. In fact, calculations show that sampling 3000 ppm SO_2 will reduce the MnO_4^- concentration by only 5 percent if all the SO_2 is consumed in the first impinger.

NH_3 is slowly oxidized to NO_3^- by the absorbing solution. At 100 ppm NH_3 in the gas stream, an interference of 6 ppm NO_x (11 mg NO_2/m^3) was observed when the sample was analyzed 10 days after collection. Therefore, the method may not be applicable to plants using NH_3 injection to control NO_x emissions unless means are taken to correct the results. An equation has been developed to allow quantitation of the interference and is discussed in Citation 4 of the Bibliography.

1.4 Precision and Bias. The method does not exhibit any bias relative to Method 7. The within-laboratory relative standard deviation for a single measurement was approximately 6 percent at 200 to 270 ppm NO_x.

1.5 Stability. Collected samples are stable for at least 4 weeks.

2. *Apparatus*

2.1 Sampling and Sample Recovery. The sampling train is the same as in Figure 7C–1 of Method 7C. Component parts are the same as in Method 7C, Section 2.1.

2.2 Sample Preparation and Analysis.

2.2.1 Magnetic Stirrer. With 25- by 10-mm Teflon-coated stirring bars.

2.2.2 Filtering Flask. 500-ml capacity with sidearm.

2.2.3 Buchner Funnel. 75-mm ID. The spout equipped with a 13-mm ID by 90-mm long piece of Teflon tubing to minimize possibility of aspirating sample solution during filtration.

2.2.4 Filter Paper. Whatman GF/C, 7.0-cm diameter.

2.2.5 Stirring Rods.

2.2.6 Volumetric Flask. 250-ml.

2.2.7 Pipettes. Class A.

2.2.8 Erlenmeyer Flasks. 250-ml.

2.2.9 Ion Chromatograph. Equipped with an anion separator column to separate NO_3^-, a $H^=$ suppressor, and necessary auxiliary equipment. Nonsuppressed and other forms of ion chromatography may also be used provided that adequate resolution of NO_3^- is obtained. The system must also be able to resolve and detect NO_2^-.

3. *Reagents*

Unless otherwise indicated, all reagents should conform to the specifications established by the Committee on Analytical Reagents of the American Chemical Society, where such specifications are available; otherwise, use the best available grade.

3.1 Sampling.

3.1.1 Water. Deionized distilled to conform to ASTM Specification D 1193–74, Type 3 (incorporated by reference—see §60.17).

3.1.2 Potassium Permanganate, 4.0 Percent (w/w), Sodium Hydroxide, 2.0 Percent (w/w). Dissolve 40.0 g of $KMnO_4$ and 20.0 g of NaOH in 940 ml of water.

3.2 Sample Preparation and Analysis.

3.2.1 Water. Same as in Section 3.1.1.

3.2.2 Hydrogen Peroxide, 5 Percent. Dilute 30 percent H_2O_2 1:5 (v/v) with water.

3.2.3 Blank Solution. Dissolve 2.4 g of $KMnO_4$ and 1.2 g of NaOH in 96 ml of water. Alternatively, dilute 60 ml of $KMnO_4$/NaOH solution to 100 ml.

3.2.4 KNO_3 Standard Solution. Dry KNO_3 at 110 °C for 2 hours, and cool in a desiccator. Accurately weigh 9 to 10 g of KNO_3 to within 0.1 mg, dissolve in water, and dilute to 1 liter. Calculate the exact NO_3– concentration from the following relationship:

$$\mu g NO_3 - / ml = g \text{ of } KNO_{3-} \times 10^3 \times \frac{62.01}{101.10}$$

This solution is stable for 2 months without preservative under laboratory conditions.

3.2.5 Eluent, 0.003 M $NaHCO_3$/0.0024 M Na_2CO_3. Dissolve 1.008 g $NaHCO_3$ and 1.018 g Na_2CO_3 in water, and dilute to 4 liters. Other eluents capable of resolving nitrate ion from sulfate and other species present may be used.

3.2.6 Quality Assurance Audit Samples. This is the same as in Method 7, Section 3.3.9. When requesting audit samples, specify that they be in the appropriate concentration range for Method 7D.

4. *Procedure*

4.1 Sampling. This is the same as in Method 7C, Section 4.1.

4.2 Sample Recovery. This is the same as in Method 7C, Section 4.2.

4.3 Sample Preparation for Analysis. Note the level of liquid in the sample container, and determine whether any sample was lost during shipment. If a noticeable amount of leakage has occurred, the volume lost can be determined from the difference between initial and final solution levels, and this value can then be used to correct the analytical result. Quantitatively transfer the contents to a 1-liter volumetric flask, and dilute to volume.

Sample preparation can be started 36 hours after collection. This time is necessary to ensure that all NO_2– is converted to NO_3– Take a 50–ml aliquot of the sample and blank, and transfer to 250-ml Erlenmeyer flasks. Add a magnetic stirring bar. Adjust the stirring rate to as fast a rate as possible without loss of solution. Add 5 percent H_2O_2 in increments of approximately 5 ml using a 5-ml pipette. When the $KMnO_4$ color appears to have been removed, allow the precipitate to settle, and examine the supernatant liquid. If the liquid is clear, the H_2O_2 addition is complete. If the $KMnO_4$ color persists, add more H_2O_2, with stirring, until the supernatant liquid is clear. (NOTE: The faster the stirring rate, the less volume of H_2O_2 that will be required to remove the $KMnO_4$.) Quantitatively transfer the mixture to a Buchner funnel containing GF/C filter paper, and filter the precipitate. The spout of the Buchner funnel should be equipped with a 13-mm ID by 90-mm long piece of Teflon tubing. This modification minimizes the possibility of aspirating sample solution during filtration. Filter the mixture into a 500-ml filtering flask. Wash the solid material four times with water. When filtration is complete, wash the Teflon tubing, quantitatively transfer the filtrate to a 250-ml volumetric flask, and dilute to volume. The sample and blank are now ready for NO_3– analysis.

4.4 Sample Analysis. The following chromatographic conditions are recommended: 0.003 M $NaHCO_3$/0.0024 M Na_2CO_3 eluent solution. (3.2.5), full scale range 3 µMHO; sample loop, 0.5 ml; flow rate, 2.5 ml/min. These conditions should give a NO_3– retention time of approximately 15 minutes (Figure 7D–1).

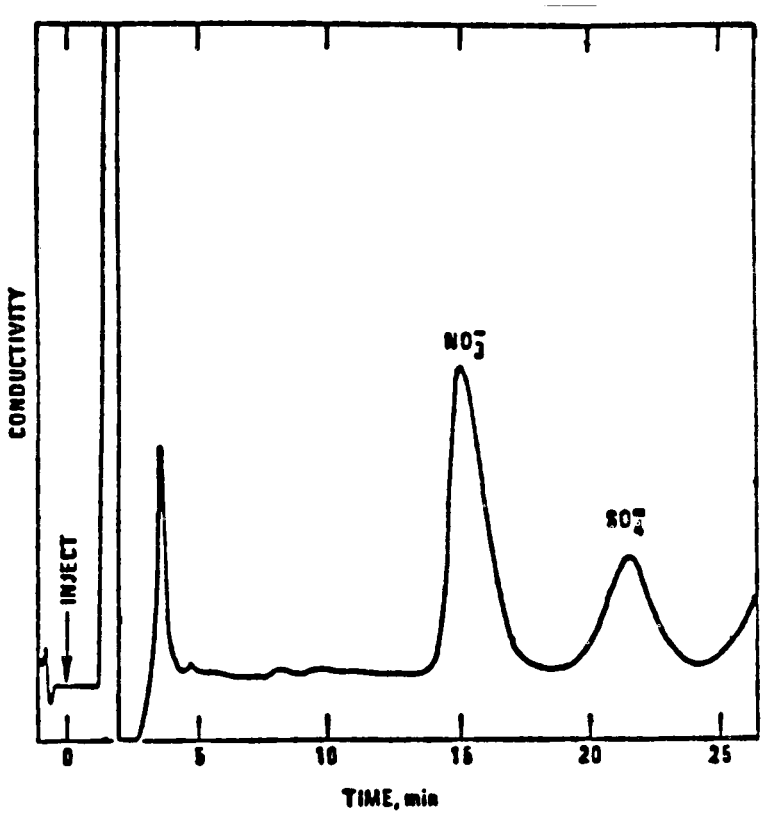

Figure 7D-1. Ion chromatograph of a prepared sample

Establish a stable baseline. Inject a sample of water, and determine if any NO_3- appears in the chromatogram. If NO_3- is present, repeat the water load/injection procedure approximately five times; then re-inject a water sample, and observe the chromatogram. When no NO_3- is present, the instrument is ready for use. Inject calibration standards. Then inject samples and a blank. Repeat the injection of the calibration standards (to compensate for any drift in response of the instrument). Measure the NO_3- peak height or peak area, and determine the sample concentration from the calibration curve.

4.5 Audit analysis. This is the same as in Method 7, Section 4.4.

5. *Calibration*

5.1 Dry Gas Metering System (DGM).

5.1.1 Initial Calibration. Same as in Method 6, Section 5.1.1. For detailed instructions on carrying out this calibration, it is suggested that Section 3.5.2 of Citation 3 in the Bibliography be consulted.

5.1.2 Post-Test Calibration Check. Same as in Method 6, Section 5.1.2.

5.2 Thermometers for DGM and Barometer. Same as in Method 6, Section 5.2 and 5.4, respectively.

5.3 Calibration Curve for Ion Chromatograph. Dilute a given volume (1.0 ml or greater) of the KNO_3 standard solution to a convenient volume with water, and use this solution to prepare calibration standards. Prepare at least four standards to cover the range of the samples being analyzed. Use pipettes for all additions. Run standards as instructed in Section 4.4. Determine peak height or area, and plot the individual values versus concentration in $\mu gNO_3-/ml$. Do not

force the curve through zero. Draw a smooth curve through the points. The curve should be linear. With the linear curve, use linear regression to determine the calibration equation.

6. *Calculations*

Carry out calculations, retaining at least one extra decimal figure beyond that of the acquired data. Round off figures after final calculation.

6.1 Sample Volume, Dry Basis, Corrected to Standard Conditions. Same as in Method 7C, Section 6.1.

6.2 Total µg NO_2 Per Sample.

$$m = (S - B) \times 250 \times \frac{1000}{50} \times \frac{46.01}{62.01} = 3710\,(S - B) \qquad \text{Eq. 7D-1}$$

Where:

m=Mass of NO_x, as NO_2, in sample, µg.
S=Analysis of sample, µg NO_3^-/ml.
B=Analysis of blank, µg NO_3^-/ml.
250=Volume of prepared sample, ml.
46.01=Molecular weight of NO_2^-.
62.01=Molecular weight of NO_3^-.
1000=Total volume of $KMnO_4$ solution, ml.
50=Aliquot $KMnO_4$/NaOH solution, ml.

6.3 Sample Concentration.

$$C = K_2 \frac{m}{V_{m(std)}}$$

Where:

C=Concentration of NO_x as NO_2, dry basis, mg/dscm.
$K_2=10^{-3}$ mg/µg.
$V_{m(std)}$=Dry gas volume measured by the dry gas meter, corrected to standard conditions, dscm.

6.4 Conversion Factors.

1.0 ppm NO=1.247 mg NO/m^3 at STP.
1.0 ppm NO_2=1.912 mg NO_2/m^3 at STP.
1 ft^3=2.832×10^{-2} m^3.
1000 mg = 1 g.

7. *Quality Control*

Quality control procedures are specified in Sections 4.1.3 (flow rate accuracy) and 4.5 (audit analysis accuracy) of Method 7C.

8. *Bibliography*

1. Margeson, J.H., W.J. Mitchell, J.C. Suggs, and M.R. Midgett. Integrated Sampling and Analysis Methods for Determining NO_x Emissions at Electric Utility Plants. U.S. Environmental Protection Agency, Research Triangle Park, NC. Journal of the Air Pollution Control Association. *32:*1210–1215. 1982.

2. Memorandum and attachment from J.H. Margeson, Source Branch, Quality Assurance Division, Environmental Monitoring Systems Laboratory, to The Record, EPA. March 30, 1983. NH_3 Interference in Methods 7C and 7D.

3. Quality Assurance Handbook for Air Pollution Measurement Systems. Volume III—Stationary Source Specific Methods. U.S. Environmental Protection Agency, Research Triangle Park, NC. Publication No. EPA–600/4–77–027b. August 1977.

4. Margeson, J.H., et al. An Integrated Method for determining NO_x Emissions at Nitric Acid Plants. Manuscript submitted to Analytical Chemistry. April 1984.

METHOD 7E—DETERMINATION OF NITROGEN OXIDES EMISSIONS FROM STATIONARY SOURCES (INSTRUMENTAL ANALYZER PROCEDURE)

1. *Applicability and Principle*

1.1 Applicability. This method is applicable to the determination of nitrogen oxides (NO_x) concentrations in emissions from stationary sources only when specified within the regulations.

1.2 Principle. A gas simple is continuously extracted from a stack, and a portion of the sample is conveyed to an instrumental chemiluminescent analyzer for determination of NO_x concentration. Performance specifications and test procedures are provided to ensure reliable data.

2. *Range and Sensitivity*

Same as Method 6C, Sections 2.1 and 2.2.

3. *Definitions*

3.1 Measurement System. The total equipment required for the determination of NO_x concentration. The measurement system consists of the following major subsystems:

3.1.1 Sample Interface, Gas Analyzer, and Data Recorder. Same as Method 6C, Sections 3.1.1, 3.1.2, and 3.1.3.

3.1.2 NO_2 to NO Converter. A device that converts the nitrogen dioxide (NO_2) in the sample gas to nitrogen oxide (NO).

3.2 Span, Calibration Gas, Analyzer Calibration Error, Sampling System Bias, Zero Drift, Calibration Drift, and Response Time. Same as Method 6C, Sections 3.2 through 3.8.

3.3 Interference Response. The output response of the measurement system to a component in the sample gas, other than the gas component being measured.

4. *Measurement System Performance Specifications*

Same as Method 6C, Sections 4.1 through 4.4.

5. *Apparatus and Reagents*

5.1 Measurement System. Any measurement system for NO_x that meets the specifications of this method. A schematic of an acceptable measurement system is shown in Figure 6C–1 of Method 6C. The essential components of the measurement system are described below:

5.1.1 Sample Probe, Sample Line, Calibration Valve Assembly, Moisture Removal System, Particulate Filter, Sample Pump, Sample Flow Rate Control, Sample Gas Manifold, and Data Recorder. Same as Method 6C, Sections 5.1.1 through 5.1.9, and 5.1.11.

5.1.2 NO_2 to NO Converter. That portion of the system that converts the nitrogen dioxide (NO_2) in the sample gas to nitrogen oxide (NO). An NO_2 to NO converter is not necessary if data are presented to demonstrate that the NO_2 portion of the exhaust gas is less than 5 percent of the total NO_x concentration.

5.1.3 NO_x Analyzer. An analyzer based on the principles of chemiluminescence, to determine continuously the NO_x concentration in the sample gas stream. The analyzer shall meet the applicable performance specifications of Section 4. A means of controlling the analyzer flow rate and a device for determining proper sample flow rate (e.g., precision rotameter, pressure gauge downstream of all flow controls, etc.) shall be provided at the analyzer.

5.2 NO_x Calibration Gases. The calibration gases for the NO_x analyzer shall be NO in N_2. Three calibration gases, as specified in Sections 5.3.1 through 5.3.3. of Method 6C, shall be used. Ambient air may be used for the zero gas.

6. *Measurement System Performance Test Procedures*

Perform the following procedures before measurement of emissions (Section 7).

6.1 Calibration Gas Concentration Verification. Follow Section 6.1 of Method 6C, except if calibration gas analysis is required, use Method 7, and change all 5 percent performance values to 10 percent (or 10 ppm, whichever is greater).

6.2 Interference Response. Conduct an interference response test of the analyzer prior to its initial use in the field. Thereafter, recheck the measurement system if changes are made in the instrumentation that could alter the interference response (e.g., changes in the gas detector). Conduct the interference response in accordance with Section 5.4 of Method 20.

6.3 Measurement System Preparation, Analyzer Calibration Error, and Sample System Bias Check. Follow Sections 6.2 through 6.4 of Method 6C.

6.4 NO_2 to NO Conversion Efficiency. Unless data are presented to demonstrate that the NO_2 concentration within the sample stream is not greater than 5 percent of the NO_x concentration, conduct an NO_2 to NO conversion efficiency test in accordance with Section 5.6 of Method 20.

7. *Emission Test Procedure*

7.1 Selection of Sampling Site and Sampling Points. Select a measurement site and sampling points using the same criteria that are applicable to tests performed using Method 7.

7.2 Sample Collection. Position the sampling probe at the first measurement point, and begin sampling at the same rate as used during the system calibration drift test. Maintain constant rate sampling (i.e., ±10 percent) during the entire run. The sampling time per run shall be the same as the total time required to perform a run using Method 7, plus twice the system response time. For each run, use only those measurements obtained after twice the response time of the measurement system has elapsed, to determine the average effluent concentration.

7.3 Zero and Calibration Drift Test. Follow Section 7.4 of Method 6C.

8. *Emission Calculation*

Follow Section 8 of Method 6C.

9. *Bibliography*

Same as bibliography of Method 6C.

METHOD 8—DETERMINATION OF SULFURIC ACID MIST AND SULFUR DIOXIDE EMISSIONS FROM STATIONARY SOURCES

1. *Principle and Applicability*

1.1 Principle. A gas sample is extracted isokinetically from the stack. The sulfuric acid mist (including sulfur trioxide) and the sulfur dioxide are separated, and both fractions are measured separately by the barium-thorin titration method.

1.2 Applicability. This method is applicable for the determination of sulfuric acid mist (including sulfur trioxide, and in the absence of other particulate matter) and sulfur dioxide emissions from stationary sources. Collaborative tests have shown that the minimum detectable limits of the method are 0.05 milligrams/cubic meter ($0.03>10^{-7}$ pounds/cubic foot) for sulfur trioxide and 1.2 mg/m^3 ($0.74\ 10^{-7}$ lb/ft^3) for sulfur dioxide. No upper limits have been established. Based on theoretical calculations for 200 milliters of 3 percent hydrogen peroxide solution, the upper concentration limit for sulfur dioxide in a 1.0 m^3 (35.3 ft^3) gas sample is about 12,500 mg/m^3 (7.7×10^{-4} lb/ft^3). The upper limit can be extended by increasing the quantity of peroxide solution in the impingers.

Possible interfering agents of this method are fluorides, free ammonia, and dimethyl aniline. If any of these interfering agents are present (this can be determined by knowledge of the process), alternative methods,

subject to the approval of the Administrator, U. S. E. P.A., are required.

Filterable particulate matter may be determined along with SO_3 and SO_2 (subject to the approval of the Administrator) by inserting a heated glass fiber filter between the probe and isopropanol impinger (see Section 2.1 of Method 6.) If this option is chosen, particulate analysis is gravimetric only; H_2SO_4 acid mist is not determined separately.

2. *Apparatus*

2.1 Sampling. A schematic of the sampling train used in this method is shown in Figure 8–1; it is similiar to the Method 5 train except that the filter position is different and the filter holder does not have to be heated. Commercial models of this train are available. For those who desire to build their own, however, complete construction details are described in APTD–0581. Changes from the APTD–0581 document and allowable modifications to Figure 8–1 are discussed in the following subsections.

The operating and maintenance procedures for the sampling train are described in APTD–0576. Since correct usage is important in obtaining valid results, all users should read the APTD–0576 document and adopt the operating and maintenance procedures outlined in it, unless otherwise specified herein. Further details and guidelines on operation and maintenance are given in Method 5 and should be read and followed whenever they are applicable.

2.1.1 Probe Nozzle. Same as Method 5, Section 2.1.1.

2.1.2 Probe Liner. Borosilicate or quartz glass, with a heating system to prevent visible condensation during sampling. Do not use metal probe liners.

2.1.3 Pitot Tube. Same as Method 5, Section 2.1.3.

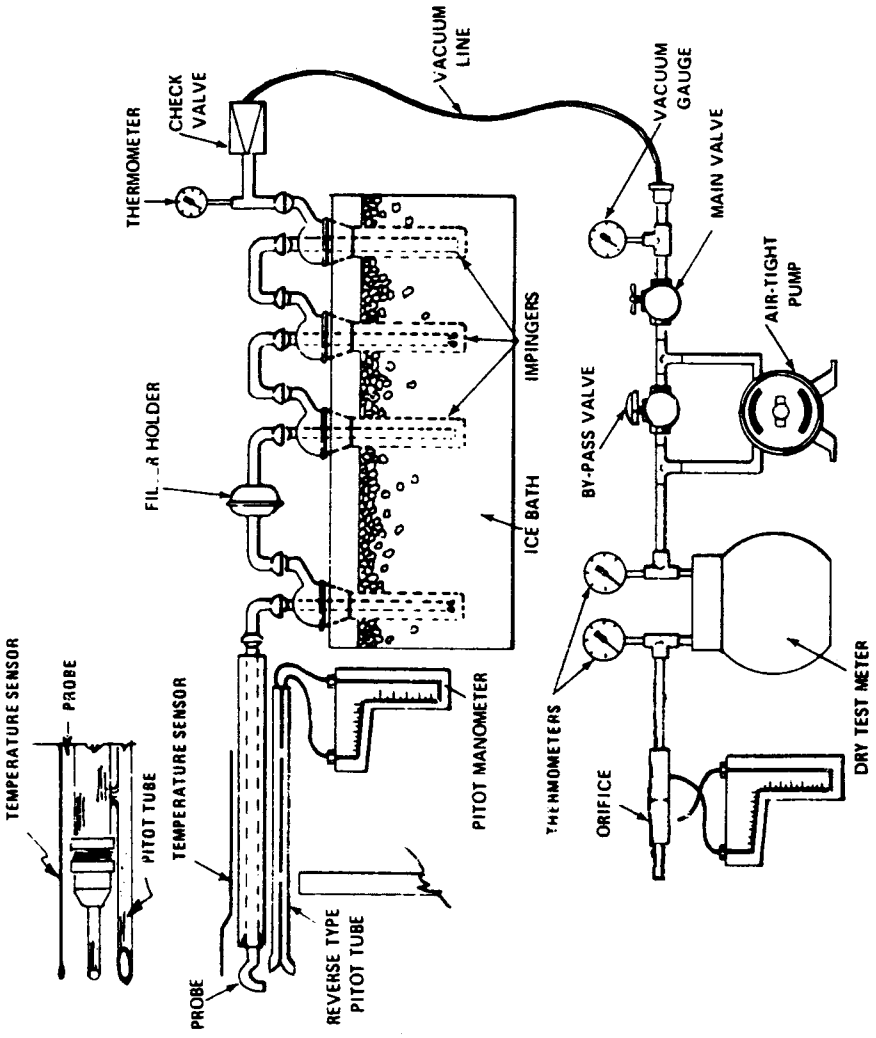

Figure 8-1. Sulfuric acid mist sampling train.

2.1.4 Differential Pressure Gauge. Same as Method 5, Section 2.1.4.

2.1.5 Filter Holder. Borosilicate glass, with a glass frit filter support and a silicone rubber gasket. Other gasket materials, e.g., Teflon or Viton, may be used subject to the approval of the Administrator. The holder design shall provide a positive seal against leakage from the outside or around the filter. The filter holder shall be placed between the first and second impingers. Note: Do not heat the filter holder.

2.1.6 Impingers. Four, as shown in Figure 8–1. The first and third shall be of the Greenburg-Smith design with standard tips. The second and fourth shall be of the Greenburg-Smith design, modified by replacing the insert with an approximately 13 millimeter (0.5 in.) ID glass tube, having an unconstricted tip located 13 mm (0.5 in.) from the bottom of the flask. Similar collection systems, which have been approved by the Administrator, may be used.

2.1.7 Metering System. Same as Method 5, Section 2.1.8.

2.1.8 Barometer. Same as Method 5, Section 2.1.9.

2.1.9 Gas Density Determination Equipment. Same as Method 5, Section 2.1.10.

2.1.10 Temperature Gauge. Thermometer, or equivalent, to measure the temperature of the gas leaving the impinger train to within 1 °C (2 °F).

2.2 Sample Recovery.

2.2.1 Wash Bottles. Polyethylene or glass, 500 ml. (two).

2.2.2 Graduated Cylinders. 250 ml, 1 liter. (Volumetric flasks may also be used.

2.2.3 Storage Bottles. Leak-free polyethlene bottles, 1000 ml size (two for each sampling run).

2.2.4 Trip Balance. 500-gram capacity, to measure to ±0.5 g (necessary only if a moisture content analysis is to be done).

2.3 Analysis.

2.3.1 Pipettes. Volumetric 25 ml, 100 ml.

2.3.2 Burette, 50 ml.

2.3.3 Erlenmeyer Flask. 250 ml. (one for each sample, blank, and standard).

2.3.4 Graduated Cylinder. 100 ml.

2.3.5 Trip Balance. 500 g capacity, to measure to ±0.5 g.

2.3.6 Dropping Bottle. To add indicator solution, 125-ml size.

3. *Reagents*

Unless otherwise indicated, all reagents are to conform to the specifications established by the Committee on Analytical Reagents of the American Chemical Society, where such specifications are available. Otherwise, use the best available grade.

3.1 Sampling.

3.1.1 Filters. Same as Method 5, Section 3.1.1.

3.1.2 Silica Gel. Same as Method 5, Section 3.1.2.

3.1.3 Water. Deionized, distilled to conform to ASTM Specification D1193–77, Type 3 (incorporated by reference—see §60.17). At the option of the analyst, the $KMnO_4$ test for oxidizable organic matter may be omitted when high concentrations of organic matter are not expected to be present.

3.1.4 Isopropanol. 80 Percent. Mix 800 ml of isopropanol with 200 ml of deionized, distilled water.

NOTE: Experience has shown that only A.C.S. grade isopropanol is satisfactory. Tests have shown that isopropanol obtained from commercial sources occasionally has peroxide impurities that will cause erroneously high sulfuric acid mist measurement. Use the following test for detecting peroxides in each lot of isopropanol: Shake 10 ml of the isopropanol with 10 ml of freshly prepared 10 percent potassium iodide solution. Prepare a blank by similarly treating 10 ml of distilled water. After 1 minute, read the absorbance on a spectrophotometer at 352 nanometers. If the absorbance exceeds 0.1, the isopropanol shall not be used. Peroxides may be removed from isopropanol by redistilling, or by passage through a column of activated alumina. However, reagent grade isopropanol with suitably low peroxide levels is readily available from commercial sources; therefore, rejection of contaminated lots may be more efficient than following the peroxide removal procedure.

3.1.5 Hydrogen Peroxide, 3 Percent. Dilute 100 ml of 30 percent hydrogen peroxide to 1 liter with deionized, distilled water. Prepare fresh daily.

3.1.6 Crushed Ice.

3.2 Sample Recovery.

3.2.1 Water. Same as 3.1.3.

3.2.2 Isopropanol, 80 Percent. Same as 3.1.4.

3.3 Analysis.

3.3.1 Water. Same as 3.1.3.

3.3.2 Isopropanol, 100 Percent.

3.3.3 Thorin Indicator. 1-(o-arsonophenylazo) 2-naphthol-3, 6-disulfonic acid, disodium salt, or equivalent. Dissolve 0.20 g in 100 ml of deionized, distilled water.

3.3.4 Barium Perchlorate (0.0100 Normal). Dissolve 1.95 g of barium perchlorate trihydrate ($Ba(C10_4)_2 \cdot 3H_2O$) in 200 ml deionized, distilled water, and dilute to 1 liter with isopropanol; 1.22 g of barium chloride dihydrate ($BaC1_2 \cdot 2H_2O$) may be used instead of the barium perchlorate. Standardize with sulfuric acid as in Section 5.2. This solution must be protected against evaporation at all times.

3.3.5 Sulfuric Acid Standard (0.0100 N). Purchase or standardize to ±0.0002 N against 0.0100 N NaOH that has previously been standardized against primary standard potassium acid phthalate.

3.3.6 Quality Assurance Audit Samples. Same as in Method 6, Section 3.3.6.

4. *Procedure*

4.1 Sampling.

4.1.1 Pretest Preparation. Follow the procedure outlined in Method 5, Section 4.1.1; filters should be inspected, but need not be desiccated, weighed, or identified. If the effluent gas can be considered dry, i.e., moisture free, the silica gel need not be weighed.

4.1.2 Preliminary Determinations. Follow the procedure outlined in Method 5, Section 4.1.2.

4.1.3 Preparation of Collection Train. Follow the procedure outlined in Method 5, Section 4.1.3 (except for the second paragraph and other obviously inapplicable parts) and use Figure 8–1 instead of Figure 5–1. Replace the second paragraph with: Place 100 ml of 80 percent isopropanol in the first impinger, 100 ml of 3 percent hydrogen peroxide in both the second and third impingers; retain a portion of each reagent for use as a blank solution. Place about 200 g of silica gel in the fourth impinger.

NOTE: If moisture content is to be determined by impinger analysis, weigh each of the first three impingers (plus absorbing solution) to the nearest 0.5 g and record these

weights. The weight of the silica gel (or silica gel plus container) must also be determined to the nearest 0.5 g and recorded.

4.1.4 Pretest Leak-Check Procedure. Follow the basic procedure outlined in Method 5, Section 4.1.4.1, noting that the probe heater shall be adjusted to the minimum temperature required to prevent condensation, and also that verbage such as, ''. . . plugging the inlet to the filter holder . . .,'' shall be replaced by, ''. . . plugging the inlet to the first impinger . . .'' The pretest leak-check is optional.

4.1.5 Train Operation. Follow the basic procedures outlined in Method 5, Section 4.1.5, in conjunction with the following special instructions. Data shall be recorded on a sheet similar to the one in Figure 8–2. The sampling rate shall not exceed 0.030 m^3/min (1.0 cfm) during the run. Periodically during the test, observe the connecting line between the probe and first impinger for signs of condensation. If it does occur, adjust the probe heater setting upward to the minimum temperature required to prevent condensation. If component changes become necessary during a run, a leak-check shall be done immediately before each change, according to the procedure outlined in Section 4.1.4.2 of Method 5 (with appropriate modifications, as mentioned in Section 4.1.4 of this method); record all leak rates. If the leakage rate(s) exceed the specified rate, the tester shall either void the run or shall plan to correct the sample volume as outlined in Section 6.3 of Method 5. Immediately after component changes, leak-checks are optional. If these leak-checks are done, the procedure outlined in Section 4.1.4.1 of Method 5 (with appropriate modifications) shall be used.

FIGURE 8–2—FIELD DATA

Plant .....
Location .....
Operator .....
Date .....
Run No .....
Sample box No .....
Meter box No .....
Meter Δ H@ .....
C factor .....
Pitot tube coefficient, Cp .....

Static pressure, mm Hg (in. Hg) .....
Ambient temperature .....
Barometer pressure .....
Assumed moisture, % .....
Probe length, m (ft) .....
Nozzle identification No .....
Average calibrated nozzle diameter, cm (in.) .....
Probed heater setting .....
Leak rate, m^3/min, (cfm) .....
Probe liner material .....
Filter No. .....

SCHEMATIC OF STACK CROSS SECTION

Traverse point number	Sampling time	Vacuum	Stack temperature (T_S)	Velocity head (Δ P)	Pressure differential-across orifice meter	Gas sample volume	Gas sample temperature at dry gas meter		Temperature of gas leaving condenser or last impinger
							Inlet	Outlet	
	(θ), min.	mm Hg (in. Hg)	°C (°F)	mm H_20 (in H_20)	mm H_20 (in H_20)	m^3 (ft^3)	°C (°F)	°C (°F)	°C (°F)
Total Average							Avg Avg	Avg	

After turning off the pump and recording the final readings at the conclusion of each run, remove the probe from the stack. Conduct a post-test (mandatory) leak-check as in Section 4.1.4.3 of Method 5 (with appropriate modification) and record the leak rate. If the post-test leakage rate exceeds the specified acceptable rate, the tester shall either correct the sample volume, as outlined in Section 6.3 of Method 5, or shall void the run.

Drain the ice bath and, with the probe disconnected, purge the remaining part of the train, by drawing clean ambient air through the system for 15 minutes at the average flow rate used for sampling.

NOTE: Clean ambient air can be provided by passing air through a charcoal filter. At the option of the tester, ambient air (without cleaning) may be used.

4.1.6 Calculation of Percent Isokinetic. Follow the procedure outlined in Method 5, Section 4.1.6.

4.2 Sample Recovery.

4.2.1 Container No. 1. If a moisture content analysis is to be done, weigh the first impinger plus contents to the nearest 0.5 g and record this weight.

Transfer the contents of the first impinger to a 250–ml graduated cylinder. Rinse the probe, first impinger, all connecting glassware before the filter, and the front half of the filter holder with 80 percent isopropanol. Add the rinse solution to the cylinder. Dilute to 250 ml with 80 percent isopropanol. Add the filter to the solution, mix, and transfer to the storage container. Protect the solution against evaporation. Mark the level of liquid on the container and identify the sample container.

4.2.2 Container No. 2. If a moisture content analysis is to be done, weigh the second and third impingers (plus contents) to the nearest 0.5 g and record these weights. Also, weigh the spent silica gel (or silica gel plus impinger) to the nearest 0.5 g.

Transfer the solutions from the second and third impingers to a 1000–ml graduated cylinder. Rinse all connecting glassware (including back half of filter holder) between the filter and silica gel impinger with deionized, distilled water, and add this rinse water to the cylinder. Dilute to a volume of 1000 ml with deionized, distilled water. Transfer the solution to a storage container. Mark the level of liquid on the container. Seal and identify the sample container.

4.3 Analysis.

Note the level of liquid in Containers 1 and 2, and confirm whether or not any sample was lost during shipment; note this on the analytical data sheet. If a noticeable amount of leakage has occured, either void the sample or use methods, subject to the approval of the Administrator, to correct the final results.

4.3.1 Container No. 1. Shake the container holding the isopropanol solution and the filter. If the filter breaks up, allow the fragments to settle for a few minutes before removing a sample. Pipette a 100–ml aliquot of this solution into a 250–ml Erlenmeyer flask, add 2 to 4 drops of thorin indicator, and titrate to a pink endpoint using 0.0100 N barium perchlorate. Repeat the titration with a second aliquot of sample and average the titration values. Replicate titrations must agree within 1 percent or 0.2 ml, whichever is greater.

4.3.2 Container No. 2. Thoroughly mix the solution in the container holding the contents of the second and third impingers. Pipette a 10–ml aliquot of sample into a 250–ml Erlenmeyer flask. Add 40 ml of isopropanol, 2 to 4 drops of thorin indicator, and titrate to a pink endpoint using 0.0100 N barium perchlorate. Repeat the titration with a second aliquot of sample and average the titration values. Replicate titrations must agree within 1 percent or 0.2 ml, whichever is greater.

4.3.3 Blanks. Prepare blanks by adding 2 to 4 drops of thorin indicator to 100 ml of 80 percent isopropanol. Titrate the blanks in the same manner as the samples.

4.4 Quality Control Procedures. Same as in Method 5, Section 4.4.

4.5 Audit Sample Analysis. Same as in Method 6, Section 4.4.

5. *Calibration*

5.1 Calibrate equipment using the procedures specified in the following sections of Method 5: Section 5.3 (metering system); Section 5.5 (temperature gauges); Section 5.7 (barometer). Note that the recommended leak-check of the metering system, described in Section 5.6 of Method 5, also applies to this method.

5.2 Standardize the barium perchlorate solution with 25 ml of standard sulfuric acid, to which 100 ml of 100 percent isopropanol has been added.

6. *Calculations*

NOTE: Carry out calculations retaining at least one extra decimal figure beyond that of the acquired data. Round off figures after final calculation.

6.1 Nomenclature.

A_n=Cross-sectional area of nozzle, m^2(ft^2).

B_{ws}=Water vapor in the gas stream, proportion by volume.

$C_{H_2SO_4}$=Sulfuric acid (including SO_3) concentration, g/dscm (lb/dscf).

C_{SO_2}=Sulfur dioxide concentration, g/dscm (lb/dscf).

I=Percent of isokinetic sampling.

N=Normality of barium perchlorate titrant, meq/ml.

P_{bar}=Barometric pressure at the sampling site, mm Hg (in. Hg).

P_s=Absolute stack gas pressure, mm Hg (in. Hg).

P_{std}=Standard absolute pressure, 760 mm Hg (29.92 in. Hg).
T_m=Average absolute dry gas meter temperature (see Figure 8–2), °K (°R).
T_s=Average absolute stack gas temperature (see Figure 8–2), °K (°R).
T_{std}=Standard absolute temperature, 293°K (528°R).
V_a=Volume of sample aliquot titrated, 100 ml for H_2SO_4 and 10 ml for SO_2.
V_{lc}=Total volume of liquid collected in impingers and silica gel, ml.
V_m=Volume of gas sample as measured by dry gas meter, dcm (dcf).
$V_{m(std)}$=Volume of gas sample measured by the dry gas meter corrected to standard conditions, dscm (dscf).
v_s=Average stack gas velocity, calculated by Method 2, Equation 2–9, using data obtained from Method 8, m/sec (ft/sec).
V_{soln}=Total volume of solution in which the sulfuric acid or sulfur dioxide sample is contained, 250 ml or 1,000 ml, respectively.
V_t=Volume of barium perchlorate titrant used for the sample, ml.
V_{tb}=Volume of barium perchlorate titrant used for the blank, ml.
Y=Dry gas meter calibration factor.
ΔH=Average pressure drop across orifice meter, mm (in.) H_2O.
θ=Total sampling time, min.
13.6=Specific gravity of mercury.
60=sec/min.
100=Conversion to percent.

6.2 Average Dry Gas Meter Temperature and Average Orifice Pressure Drop. See data sheet (Figure 8–2).

6.3 Dry Gas Volume. Correct the sample volume measured by the dry gas meter to standard conditions (20 °C and 760 mm Hg or 68 °F and 29.92 in. Hg) by using Equation 8–1.

$$V_{m(std)} = V_m Y \left(\frac{T_{std}}{T_m}\right) \frac{P_{bar} + \left(\frac{\Delta H}{13.6}\right)}{P_{std}} = K_1 V_m Y \frac{P_{bar} + (\Delta H/13.6)}{T_m}$$

Equation 8–1

Where:
K_1=0.3858 °K/mm Hg for metric units.
=17.64 °R/in., Hg for English units.

NOTE: If the leak rate observed during any mandatory leak-checks exceeds the specified acceptable rate, the tester shall either correct the value of V_m in Equation 8–1 (as described in Section 6.3 of Method 5), or shall invalidate the test run.

6.4 Volume of Water Vapor and Moisture Content. Calculate the volume of water vapor using Equation 5–2 of Method 5; the weight of water collected in the impingers and silica gel can be directly converted to milliliters (the specific gravity of water is 1 g/ml). Calculate the moisture content of the stack gas, using Equation 5–3 of Method 5. The ''Note'' in Section 6.5 of Method 5 also applies to this method. Note that if the effluent gas stream can be considered dry, the volume of water vapor and moisture content need not be calculated.

6.5 Sulfuric Acid Mist (including SO_3) Concentration.

$$C_{H_2SO_4} = K_2 \frac{N(V_t - V_{tb})\left(\frac{V_{soln}}{V_a}\right)}{V_{m(std)}}$$

Equation 8–2

Where:
K_2=0.04904 g/milliequivalent for metric units.
=1.081×10^{-4}lb/meq for English units.

6.6 Sulfur Dioxide Concentration.

$$C_{SO_2} = K_3 \frac{N(V_t - V_{tb})\left(\frac{V_{soln}}{V_a}\right)}{V_{m(std)}}$$

Equation 8–3

Where:
K_3=0.03203 g/meq for metric units.
=7.061×10^{-5} lb/meq for English units.

6.7 Isokinetic Variation.

6.7.1 Calculation from Raw Data.

$$I = \frac{100T_s\left[K_4V_{1c}+\left(V_mY/T_m\right)/\left(P_{bar}+\Delta H/13.6\right)\right]}{60\theta v_sP_sA_n} \qquad \text{Eq. 8-4}$$

Where:

K_4=0.003464 mm Hg-m^3/ml-°K for metric units.

=0.002676 in. Hg-ft^3/ml-°R for English units.

6.7.2 Calculation from Intermediate Values.

$$I = \frac{T_sV_{m(std)}P_{std}100}{T_{std}v_s\theta A_nP_s60(1-B_{ws})} = K_5\frac{T_sV_{m(std)}}{P_sv_sA_n\theta(1-B_{ws})}$$

Equation 8–5

where:

K_5=4.320 for metric units.

=0.09450 for English units

6.8 Acceptable Results. If 90 percent < I <110 percent, the results are acceptable. If the results are low in comparison to the standards and I is beyond the acceptable range, the Administrator may opt to accept the results. Use Citation 4 in the Bibliography of Method 5 to make judgments. Otherwise, reject the results and repeat the test.

6.9 Stack Gas Velocity and Volumetric Flow Rate. Calculate the average stack gas velocity and volumetric flow rate, if needed, using data obtained in this method and equations in Sections 5.2 and 5.3 of Method 2.

6.10 Relative Error (RE) for QA Audit Samples. Same as in Method 6, Section 6.4.

7. *Bibliography*

1. Atmospheric Emissions from Sulfuric Acid Manufacturing Processes. U.S. DHEW, PHS, Division of Air Pollution. Public Health Service Publication No. 999–AP–13. Cincinnati, OH. 1965.

2. Corbett, P. F. The Determination of SO_2 and SO_3 in Flue Gases. Journal of the Institute of Fuel. *24:*237–243. 1961.

3. Martin, Robert M. Construction Details of Isokinetic Source Sampling Equipment. Environmental Protection Agency. Research Triangle Park, NC. Air Pollution Control Office Publication No. APTD–0581. April, 1971.

4. Patton, W. F. and J. A. Brink, Jr. New Equipment and Techniques for Sampling Chemical Process Gases. Journal of Air Pollution Control Association. *13:*162. 1963.

5. Rom, J. J. Maintenance, Calibration, and Operation of Isokinetic Source-Sampling Equipment. Office of Air Programs, Environmental Protection Agency. Research Triangle Park, NC. APTD–0576. March, 1972.

6. Hamil, H. F. and D. E. Camann. Collaborative Study of Method for Determination of Sulfur Dioxide Emissions from Stationary Sources (Fossil Fuel-Fired Steam Generators). Environmental Protection Agency. Research Triangle Park, NC. EPA–650/4–74–024. December, 1973.

7. Annual Book of ASTM Standards. Part 31; Water, Atmospheric Analysis. pp. 40–42. American Society for Testing and Materials. Philadelphia, Pa. 1974.

METHOD 9—VISUAL DETERMINATION OF THE OPACITY OF EMISSIONS FROM STATIONARY SOURCES

Many stationary sources discharge visible emissions into the atmosphere; these emissions are usually in the shape of a plume. This method involves the determination of plume opacity by qualified observers. The method includes procedures for the training and certification of observers, and procedures to be used in the field for determination of plume opacity. The appearance of a plume as viewed by an observer depends upon a number of variables, some of which may be controllable and some of which may not be controllable in the field. Variables which can be controlled to an extent to which they no longer exert a significant influence upon plume appearance include: Angle of the observer with respect to the plume; angle of the observer with respect to the sun; point of observation of attached and detached steam plume; and angle of the observer with respect to a plume emitted from a rectangular stack with a large length to width ratio. The method includes specific criteria applicable to these variables.

Other variables which may not be controllable in the field are luminescence and color contrast between the plume and the background against which the plume is viewed. These variables exert an influence upon the appearance of a plume as viewed by an observer, and can affect the ability of the observer to accurately assign opacity values to the observed plume. Studies of the theory of plume opacity and field studies have demonstrated that a plume is most visible and presents the greatest apparent opacity when viewed against a contrasting background. It follows from this, and is confirmed by field trials, that the opacity of a plume, viewed under conditions where a contrasting background is present can be assigned with the greatest degree of accuracy. However, the potential for a positive error is also the greatest when a plume is viewed under such contrasting conditions. Under conditions presenting a less contrasting background, the apparent opacity of a plume is less and

approaches zero as the color and luminescence contrast decrease toward zero. As a result, significant negative bias and negative errors can be made when a plume is viewed under less contrasting conditions. A negative bias decreases rather than increases the possibility that a plant operator will be cited for a violation of opacity standards due to observer error.

Studies have been undertaken to determine the magnitude of positive errors which can be made by qualified observers while reading plumes under contrasting conditions and using the procedures set forth in this method. The results of these studies (field trials) which involve a total of 769 sets of 25 readings each are as follows:

(1) For black plumes (133 sets at a smoke generator), 100 percent of the sets were read with a positive error[1] of less than 7.5 percent opacity; 99 percent were read with a positive error of less than 5 percent opacity.

(2) For white plumes (170 sets at a smoke generator, 168 sets at a coal-fired power plant, 298 sets at a sulfuric acid plant), 99 percent of the sets were read with a positive error of less than 7.5 percent opacity; 95 percent were read with a positive error of less than 5 percent opacity.

The positive observational error associated with an average of twenty-five readings is therefore established. The accuracy of the method must be taken into account when determining possible violations of applicable opacity standards.

1. *Principle and Applicability*

1.1 Principle. The opacity of emissions from stationary sources is determined visually by a qualified observer.

1.2 Applicability. This method is applicable for the determination of the opacity of emissions from stationary sources pursuant to §60.11(b) and for qualifying observers for visually determining opacity of emissions.

2. *Procedures*

The observer qualified in accordance with section 3 of this method shall use the following procedures for visually determining the opacity of emissions:

2.1 Position. The qualified observer shall stand at a distance sufficient to provide a clear view of the emissions with the sun oriented in the 140° sector to his back. Consistent with maintaining the above requirement, the observer shall, as much as possible, make his observations from a position such that his line of vision is approximately perpendicular to the plume direction, and when observing opacity of emissions from rectangular outlets (e.g., roof monitors, open baghouses, noncircular stacks), approximately perpendicular to the longer axis of the outlet. The observer's line of sight should not include more than one plume at a time when multiple stacks are involved, and in any case the observer should make his observations with his line of sight perpendicular to the longer axis of such a set of multiple stacks (e.g., stub stacks on baghouses).

2.2 Field Records. The observer shall record the name of the plant, emission location, type facility, observer's name and affiliation, a sketch of the observer's position relative to the source, and the date on a field data sheet (Figure 9–1). The time, estimated distance to the emission location, approximate wind direction, estimated wind speed, description of the sky condition (presence and color of clouds), and plume background are recorded on a field data sheet at the time opacity readings are initiated and completed.

2.3 Observations. Opacity observations shall be made at the point of greatest opacity in that portion of the plume where condensed water vapor is not present. The observer shall not look continuously at the plume, but instead shall observe the plume momentarily at 15-second intervals.

2.3.1 Attached Steam Plumes. When condensed water vapor is present within the plume as it emerges from the emission outlet, opacity observations shall be made beyond the point in the plume at which condensed water vapor is no longer visible. The observer shall record the approximate distance from the emission outlet to the point in the plume at which the observations are made.

2.3.2 Detached Steam Plume. When water vapor in the plume condenses and becomes visible at a distinct distance from the emission outlet, the opacity of emissions should be evaluated at the emission outlet prior to the condensation of water vapor and the formation of the steam plume.

2.4 Recording Observations. Opacity observations shall be recorded to the nearest 5 percent at 15-second intervals on an observational record sheet. (See Figure 9–2 for an example.) A minimum of 24 observations shall be recorded. Each momentary observation recorded shall be deemed to represent the average opacity of emissions for a 15-second period.

2.5 Data Reduction. Opacity shall be determined as an average of 24 consecutive observations recorded at 15-second intervals. Divide the observations recorded on the record sheet into sets of 24 consecutive observations. A set is composed of any 24 consecutive observations. Sets need not be consecutive in time and in no case shall two sets overlap. For each set of 24 observations, calculate the average by summing the opacity of the 24 observations and dividing this sum

[1] For a set, positive error = average opacity determined by observers' 25 observations—average opacity determined from transmissometer's 25 recordings.

by 24. If an applicable standard specifies an averaging time requiring more than 24 observations, calculate the average for all observations made during the specified time period. Record the average opacity on a record sheet. (See Figure 9–1 for an example.)

3. *Qualifications and Testing*

3.1 Certification Requirements. To receive certification as a qualified observer, a candidate must be tested and demonstrate the ability to assign opacity readings in 5 percent increments to 25 different black plumes and 25 different white plumes, with an error not to exceed 15 percent opacity on any one reading and an average error not to exceed 7.5 percent opacity in each category. Candidates shall be tested according to the procedures described in section 3.2. Smoke generators used pursuant to section 3.2 shall be equipped with a smoke meter which meets the requirements of section 3.3.

The certification shall be valid for a period of 6 months, at which time the qualification procedure must be repeated by any observer in order to retain certification.

3.2 Certification Procedure. The certification test consists of showing the candidate a complete run of 50 plumes—25 black plumes and 25 white plumes—generated by a smoke generator. Plumes within each set of 25 black and 25 white runs shall be presented in random order. The candidate assigns an opacity value to each plume and records his observation on a suitable form. At the completion of each run of 50 readings, the score of the candidate is determined. If a candidate fails to qualify, the complete run of 50 readings must be repeated in any retest. The smoke test may be administered as part of a smoke school or training program, and may be preceded by training or familiarization runs of the smoke generator during which candidates are shown black and white plumes of known opacity.

3.3 Smoke Generator Specifications. Any smoke generator used for the purposes of section 3.2 shall be equipped with a smoke meter installed to measure opacity across the diameter of the smoke generator stack. The smoke meter output shall display instack opacity based upon a pathlength equal to the stack exit diameter, on a full 0 to 100 percent chart recorder scale. The smoke meter optical design and performance shall meet the specifications shown in Table 9–1. The smoke meter shall be calibrated as prescribed in section 3.3.1 prior to the conduct of each smoke reading test. At the completion of each test, the zero and span drift shall be checked and if the drift exceeds ±1 percent opacity, the condition shall be corrected prior to conducting any subsequent test runs. The smoke meter shall be demonstrated, at the time of installation, to meet the specifications listed in Table 9–1. This demonstration shall be repeated following any subsequent repair or replacement of the photocell or associated electronic circuitry including the chart recorder or output meter, or every 6 months, whichever occurs first.

TABLE 9–1—SMOKE METER DESIGN AND PERFORMANCE SPECIFICATIONS

Parameter	Specification
a. Light source	Incandescent lamp operated at nominal rated voltage.
b. Spectral response of photocell.	Photopic (daylight spectral response of the human eye—Citation 3).
c. Angle of view	15° maximum total angle.
d. Angle of projection	15° maximum total angle.
e. Calibration error	±3% opacity, maximum.
f. Zero and span drift	±1% opacity, 30 minutes
g. Response time	5 seconds.

3.3.1 Calibration. The smoke meter is calibrated after allowing a minimum of 30 minutes warmup by alternately producing simulated opacity of 0 percent and 100 percent. When stable response at 0 percent or 100 percent is noted, the smoke meter is adjusted to produce an output of 0 percent or 100 percent, as appropriate. This calibration shall be repeated until stable 0 percent and 100 percent readings are produced without adjustment. Simulated 0 percent and 100 percent opacity values may be produced by alternately switching the power to the light source on and off while the smoke generator is not producing smoke.

3.3.2 Smoke Meter Evaluation. The smoke meter design and performance are to be evaluated as follows:

3.3.2.1 Light Source. Verify from manufacturer's data and from voltage measurements made at the lamp, as installed, that the lamp is operated within ±5 percent of the nominal rated voltage.

3.3.2.2 Spectral Response of Photocell. Verify from manufacturer's data that the photocell has a photopic response; i.e., the spectral sensitivity of the cell shall closely approximate the standard spectral-luminosity curve for photopic vision which is referenced in (b) of Table 9–1.

FIGURE 9-1
RECORD OF VISUAL DETERMINATION OF OPACITY

PAGE ___ of ___

COMPANY _____
LOCATION _____
TEST NUMBER _____
DATE _____
TYPE FACILITY _____
CONTROL DEVICE _____

HOURS OF OBSERVATION _____
OBSERVER _____
OBSERVER CERTIFICATION DATE _____
OBSERVER AFFILIATION _____
POINT OF EMISSIONS _____
HEIGHT OF DISCHARGE POINT _____

	Initial			Final
CLOCK TIME				
OBSERVER LOCATION Distance to Discharge				
Direction from Discharge				
Height of Observation Point				
BACKGROUND DESCRIPTION				
WEATHER CONDITIONS Wind Direction				
Wind Speed				
Ambient Temperature				
SKY CONDITIONS (clear, overcast, % clouds, etc.)				
PLUME DESCRIPTION Color				
Distance Visible				
OTHER INFORMATION				

SUMMARY OF AVERAGE OPACITY

Set Number	Time Start--End	Opacity Sum	Opacity Average

Readings ranged from ____ to ____ % opacity

The source was/was not in compliance with ____ at the time evaluation was made.

FIGURE 9–2—OBSERVATION RECORD

Page of

Company .....
Location .....
Test Number .....
Date.

Observer .....
Type facility .....
Point of emissions .....

Hr.	Min.	Seconds				Steam plume (check if applicable)		Comments
		0	15	30	45	Attached	Detached	
	0							
	1							
	2							
	3							
	4							
	5							
	6							
	7							
	8							
	9							
	10							
	11							
	12							
	13							
	14							
	15							
	16							
	17							
	18							
	19							
	20							
	21							
	22							
	23							
	24							
	25							
	26							
	27							
	28							
	29							

FIGURE 9–2—OBSERVATION RECORD—(CONTINUED)

Page of

Company .....
Location .....
Test Number .....
Date.

Observer .....
Type facility .....
Point of emissions .....

Hr.	Min.	Seconds				Steam plume (check if applicable)		Comments
		0	15	30	45	Attached	Detached	
	30							

Hr.	Min.	Seconds				Steam plume (check if applicable)		Comments
		0	15	30	45	Attached	Detached	
	31							
	32							
	33							
	34							
	35							
	36							
	37							
	38							
	39							
	40							
	41							
	42							
	43							
	44							
	45							
	46							
	47							
	48							
	49							
	50							
	51							
	52							
	53							
	54							
	55							
	56							
	57							
	58							
	59							

3.3.2.3 Angle of View. Check construction geometry to ensure that the total angle of view of the smoke plume, as seen by the photocell, does not exceed 15°. The total angle of view may be calculated from: $\theta = 2 \tan^{-1} d/2L$, where θ=total angle of view; d=the sum of the photocell diameter+the diameter of the limiting aperture; and L=the distance from the photocell to the limiting aperture. The limiting aperture is the point in the path between the photocell and the smoke plume where the angle of view is most restricted. In smoke generator smoke meters this is normally an orifice plate.

3.3.2.4 Angle of Projection. Check construction geometry to ensure that the total angle of projection of the lamp on the smoke plume does not exceed 15°. The total angle of projection may be calculated from: $\theta = 2 \tan^{-1} d/2L$, where θ= total angle of projection; d= the sum of the length of the lamp

filament + the diameter of the limiting aperture; and L= the distance from the lamp to the limiting aperture.

3.3.2.5 Calibration Error. Using neutral-density filters of known opacity, check the error between the actual response and the theoretical linear response of the smoke meter. This check is accomplished by first calibrating the smoke meter according to 3.3.1 and then inserting a series of three neutral-density filters of nominal opacity of 20, 50, and 75 percent in the smoke meter pathlength. Filters calibrated within ±2 percent shall be used. Care should be taken when inserting the filters to prevent stray light from affecting the meter. Make a total of five nonconsecutive readings for each filter. The maximum error on any one reading shall be 3 percent opacity.

3.3.2.6 Zero and Span Drift. Determine the zero and span drift by calibrating and operating the smoke generator in a normal manner over a 1-hour period. The drift is measured by checking the zero and span at the end of this period.

3.3.2.7 Response Time. Determine the response time by producing the series of five simulated 0 percent and 100 percent opacity values and observing the time required to reach stable response. Opacity values of 0 percent and 100 percent may be simulated by alternately switching the power to the light source off and on while the smoke generator is not operating.

4. *Bibliography*.

1. Air Pollution Control District Rules and Regulations, Los Angeles County Air Pollution Control District, Regulation IV, Prohibitions, Rule 50.

2. Weisburd, Melvin I., Field Operations and Enforcement Manual for Air, U.S. Environmental Protection Agency, Research Triangle Park, NC. APTD–1100, August 1972, pp. 4.1–4.36.

3. Condon, E.U., and Odishaw, H., Handbook of Physics, McGraw-Hill Co., New York, NY, 1958, Table 3.1, p. 6–52.

ALTERNATE METHOD 1—DETERMINATION OF THE OPACITY OF EMISSIONS FROM STATIONARY SOURCES REMOTELY BY LIDAR

This alternate method provides the quantitative determination of the opacity of an emissions plume remotely by a mobile lidar system (laser radar; Light Detection and Ranging). The method includes procedures for the calibration of the lidar and procedures to be used in the field for the lidar determination of plume opacity. The lidar is used to measure plume opacity during either day or nighttime hours because it contains its own pulsed light source or transmitter. The operation of the lidar is not dependent upon ambient lighting conditions (light, dark, sunny or cloudy).

The lidar mechanism or technique is applicable to measuring plume opacity at numerous wavelengths of laser radiation. However, the performance evaluation and calibration test results given in support of this method apply only to a lidar that employs a ruby (red light) laser [Reference 5.1].

1. *Principle and Applicability*

1.1 Principle. The opacity of visible emissions from stationary sources (stacks, roof vents, etc.) is measured remotely by a mobile lidar (laser radar).

1.2 Applicability. This method is applicable for the remote measurement of the opacity of visible emissions from stationary sources during both nighttime and daylight conditions, pursuant to 40 CFR §60.11(b). It is also applicable for the calibration and performance verification of the mobile lidar for the measurement of the opacity of emissions. A performance/design specification for a basic lidar system is also incorporated into this method.

1.3 Definitions.

Azimuth angle: The angle in the horizontal plane that designates where the laser beam is pointed. It is measured from an arbitrary fixed reference line in that plane.

Backscatter: The scattering of laser light in a direction opposite to that of the incident laser beam due to reflection from particulates along the beam's atmospheric path which may include a smoke plume.

Backscatter signal: The general term for the lidar return signal which results from laser light being backscattered by atmospheric and smoke plume particulates.

Convergence distance: The distance from the lidar to the point of overlap of the lidar receiver's field-of-view and the laser beam.

Elevation angle: The angle of inclination of the laser beam referenced to the horizontal plane.

Far region: The region of the atmosphere's path along the lidar line-of-sight beyond or behind the plume being measured.

Lidar: Acronym for Light Detection and Ranging.

Lidar range: The range or distance from the lidar to a point of interest along the lidar line-of-sight.

Near region: The region of the atmospheric path along the lidar line-of-sight between the lidar's convergence distance and the plume being measured.

Opacity: One minus the optical transmittance of a smoke plume, screen target, etc.

Pick interval: The time or range intervals in the lidar backscatter signal whose minimum average amplitude is used to calculate opacity. Two pick intervals are required, one in the near region and one in the far region.

Plume: The plume being measured by lidar.

Plume signal: The backscatter signal resulting from the laser light pulse passing through a plume.

$1/R^2$correction: The correction made for the systematic decrease in lidar backscatter signal amplitude with range.

Reference signal: The backscatter signal resulting from the laser light pulse passing through ambient air.

Sample interval: The time period between successive samples for a digital signal or between successive measurements for an analog signal.

Signal spike: An abrupt, momentary increase and decrease in signal amplitude.

Source: The source being tested by lidar.

Time reference: The time (t_o) when the laser pulse emerges from the laser, used as the reference in all lidar time or range measurements.

2. *Procedures*

The mobile lidar calibrated in accordance with Paragraph 3 of this method shall use the following procedures for remotely measuring the opacity of stationary source emissions:

2.1 Lidar Position. The lidar shall be positioned at a distance from the plume sufficient to provide an unobstructed view of the source emissions. The plume must be at a range of at least 50 meters or three consecutive pick intervals (whichever is greater) from the lidar's transmitter/receiver convergence distance along the line-of-sight. The maximum effective opacity measurement distance of the lidar is a function of local atmospheric conditions, laser beam diameter, and plume diameter. The test position of the lidar shall be selected so that the diameter of the laser beam at the measurement point within the plume shall be no larger than three-fourths the plume diameter. The beam diameter is calculated by Equation (AM1–1):

$$D(lidar)=A+R\phi\leq 0.75\ D(Plume)\quad (AM1\text{–}1)$$

Where:

D(Plume)=diameter of the plume (cm),

ϕ=laser beam divergence measured in radians

R=range from the lidar to the source (cm)

D(Lidar)=diameter of the laser beam at range R (cm),

A=diameter of the laser beam or pulse where it leaves the laser.

The lidar range, R, is obtained by aiming and firing the laser at the emissions source structure immediately below the outlet. The range value is then determined from the backscatter signal which consists of a signal spike (return from source structure) and the atmospheric backscatter signal [Reference 5.1]. This backscatter signal should be recorded.

When there is more than one source of emissions in the immediate vicinity of the plume, the lidar shall be positioned so that the laser beam passes through only a single plume, free from any interference of the other plumes for a minimum of 50 meters or three consecutive pick intervals (whichever is greater) in each region before and beyond the plume along the line-of-sight (determined from the backscatter signals). The lidar shall initially be positioned so that its line-of-sight is approximately perpendicular to the plume.

When measuring the opacity of emissions from rectangular outlets (e.g., roof monitors, open baghouses, noncircular stacks, etc.), the lidar shall be placed in a position so that its line-of-sight is approximately perpendicular to the longer (major) axis of the outlet.

2.2 Lidar Operational Restrictions. The lidar receiver shall not be aimed within an angle of ± 15° (cone angle) of the sun.

This method shall not be used to make opacity measurements if thunderstorms, snowstorms, hail storms, high wind, high-ambient dust levels, fog or other atmospheric conditions cause the reference signals to consistently exceed the limits specified in Section 2.3.

2.3 Reference Signal Requirements. Once placed in its proper position for opacity measurement, the laser is aimed and fired with the line-of-sight near the outlet height and rotated horizontally to a position clear of the source structure and the associated plume. The backscatter signal obtained from this position is called the ambient-air or reference signal. The lidar operator shall inspect this signal [Section V of Reference 5.1] to: (1) determine if the lidar line-of-sight is free from interference from other plumes and from physical obstructions such as cables, power lines, etc., for a minimum of 50 meters or three consecutive pick intervals (whichever is greater) in each region before and beyond the plume, and (2) obtain a qualitative measure of the homogeneity of the ambient air by noting any signal spikes.

Should there be any signal spikes on the reference signal within a minimum of 50 meters or three consecutive pick intervals (whichever is greater) in each region before and beyond the plume, the laser shall be fired three more times and the operator shall inspect the reference signals on the display. If the spike(s) remains, the azimuth angle shall be changed and the above procedures conducted again. If the spike(s) disappears in all three reference signals, the lidar line-of-sight is acceptable if there is shot-to-shot consistency and there is no interference from other plumes.

Shot-to-shot consistency of a series of reference signals over a period of twenty seconds is verified in either of two ways. (1) The lidar operator shall observe the reference signal amplitudes. For shot-to-shot consistency the ratio of R_f to R_n [amplitudes of the near and far region pick intervals (Section 2.6.1)] shall vary by not more than ± 6% between shots; or (2) the lidar operator shall accept any one of the reference signals and treat the other two as plume signals; then

the opacity for each of the subsequent reference signals is calculated (Equation AM1–2). For shot-to-shot consistency, the opacity values shall be within ±3% of 0% opacity and the associated S_o values less than or equal to 8% (full scale) [Section 2.6].

If a set of reference signals fails to meet the requirements of this section, then all plume signals [Section 2.4] from the last set of acceptable reference signals to the failed set shall be discarded.

2.3.1 Initial and Final Reference Signals. Three reference signals shall be obtained within a 90-second time period prior to any data run. A final set of three reference signals shall be obtained within three (3) minutes after the completion of the same data run.

2.3.2 Temporal Criterion for Additional Reference Signals. An additional set of reference signals shall be obtained during a data run if there is a change in wind direction or plume drift of 30° or more from the direction that was prevalent when the last set of reference signals was obtained. An additional set of reference signals shall also be obtained if there is an increase in value of S_{In} (near region standard deviation, Equation AM1–5) or S_{If} (far region standard deviation, Equation AM1–6) that is greater than 6% (full scale) over the respective values calculated from the immediately previous plume signal, and this increase in value remains for 30 seconds or longer. An additional set of reference signals shall also be obtained if there is a change in amplitude in either the near or the far region of the plume signal, that is greater than 6% of the near signal amplitude and this change in amplitude remains for 30 seconds or more.

2.4 Plume Signal Requirements. Once properly aimed, the lidar is placed in operation with the nominal pulse or firing rate of six pulses/minute (1 pulse/10 seconds). The lidar operator shall observe the plume backscatter signals to determine the need for additional reference signals as required by Section 2.3.2. The plume signals are recorded from lidar start to stop and are called a data run. The length of a data run is determined by operator discretion. Short-term stops of the lidar to record additional reference signals do not constitute the end of a data run if plume signals are resumed within 90 seconds after the reference signals have been recorded, and the total stop or interrupt time does not exceed 3 minutes.

2.4.1 Non-hydrated Plumes. The laser shall be aimed at the region of the plume which displays the greatest opacity. The lidar operator must visually verify that the laser is aimed clearly above the source exit structure.

2.4.2 Hydrated Plumes. The lidar will be used to measure the opacity of hydrated or so-called steam plumes. As listed in the reference method, there are two types, i.e., attached and detached steam plumes.

2.4.2.1 Attached Steam Plumes. When condensed water vapor is present within a plume, lidar opacity measurements shall be made at a point within the residual plume where the condensed water vapor is no longer visible. The laser shall be aimed into the most dense region (region of highest opacity) of the residual plume.

During daylight hours the lidar operator locates the most dense portion of the residual plume visually. During nighttime hours a high-intensity spotlight, night vision scope, or low light level TV, etc., can be used as an aid to locate the residual plume. If visual determination is ineffective, the lidar may be used to locate the most dense region of the residual plume by repeatedly measuring opacity, along the longitudinal axis or center of the plume from the emissions outlet to a point just beyond the steam plume. The lidar operator should also observe color differences and plume reflectivity to ensure that the lidar is aimed completely within the residual plume. If the operator does not obtain a clear indication of the location of the residual plume, this method shall not be used.

Once the region of highest opacity of the residual plume has been located, aiming adjustments shall be made to the laser line-of-sight to correct for the following: movement to the region of highest opacity out of the lidar line-of-sight (away from the laser beam) for more than 15 seconds, expansion of the steam plume (air temperature lowers and/or relative humidity increases) so that it just begins to encroach on the field-of-view of the lidar's optical telescope receiver, or a decrease in the size of the steam plume (air temperature higher and/or relative humidity decreases) so that regions within the residual plume whose opacity is higher than the one being monitored, are present.

2.4.2.2 Detached Steam Plumes. When the water vapor in a hydrated plume condenses and becomes visible at a finite distance from the stack or source emissions outlet, the opacity of the emissions shall be measured in the region of the plume clearly above the emissions outlet and below condensation of the water vapor.

During daylight hours the lidar operators can visually determine if the steam plume is detached from the stack outlet. During nighttime hours a high-intensity spotlight, night vision scope, low light level TV, etc., can be used as an aid in determining if the steam plume is detached. If visual determination is ineffective, the lidar may be used to determine if the steam plume is detached by repeatedly measuring plume opacity from the outlet to the steam plume along the plume's longitudinal axis or center line. The lidar operator should also observe color differences and plume reflectivity to detect a

detached plume. If the operator does not obtain a clear indication of the location of the detached plume, this method shall not be used to make opacity measurements between the outlet and the detached plume.

Once the determination of a detached steam plume has been confirmed, the laser shall be aimed into the region of highest opacity in the plume between the outlet and the formation of the steam plume. Aiming adjustments shall be made to the lidar's line-of-sight within the plume to correct for changes in the location of the most dense region of the plume due to changes in wind direction and speed or if the detached steam plume moves closer to the source outlet encroaching on the most dense region of the plume. If the detached steam plume should move too close to the source outlet for the lidar to make interference-free opacity measurements, this method shall not be used.

2.5 Field Records. In addition to the recording recommendations listed in other sections of this method the following records should be maintained. Each plume measured should be uniquely identified. The name of the facility, type of facility, emission source type, geographic location of the lidar with respect to the plume, and plume characteristics should be recorded. The date of the test, the time period that a source was monitored, the time (to the nearest second) of each opacity measurement, and the sample interval should also be recorded. The wind speed, wind direction, air temperature, relative humidity, visibility (measured at the lidar's position), and cloud cover should be recorded at the beginning and end of each time period for a given source. A small sketch depicting the location of the laser beam within the plume should be recorded.

If a detached or attached steam plume is present at the emissions source, this fact should be recorded. Figures AM1–I and AM1–II are examples of logbook forms that may be used to record this type of data. Magnetic tape or paper tape may also be used to record data.

LIDAR LOG CONTROL NUMBER TABULATION (cont')

(Assign a CONTROL NUMBER to each individual source under test)

CONTROL NUMBER	DATE ASSIGNED	PROJECT	CITY, STATE

Next Log Book Number-_____

LIDAR LOG CONTROL NUMBER TABULATION

Log Book Number-_____

(Assign a CONTROL NUMBER to each individual source under test)

CONTROL NUMBER	DATE ASSIGNED	PROJECT	CITY, STATE

continued on next page

Figure AM1-1 Lidar Log Control Number Tabulation

LIDAR LOG OF OPERATIONS

Control number: OMEGA-_____

Facility name and location:

At the field site on / / from _____ to _____ (local time)

Location of LIDAR:

Direction to source _____ Range to source _____ km

Laser inclination (+ angle is up, horizontal is 0°) _____

Source type and official designation:

Plume characteristics (color, shape, steam present, etc.):

Wind speed: begin _____ km/hr end _____ km/hr Wind direction: begin _____ end _____

Air temperature: begin _____ °C end _____ C Relative humidity: begin _____ %, end _____ %

Barometer: begin _____ end _____ Visibility: begin _____ km end _____ km

Cloud cover: begin _____ end _____

Data records made in field (tapes, printouts, photo's, etc.):

MAGNETIC TAPES	
tape#	track#	files

OPERATOR'S SIGNATURE: _____ DATE: _____

WITNESS SIGNATURE: _____ DATE: _____

LIDAR OPERATOR'S NOTES

(Include position of laser beam within plume-- attached plume, etc.)

LIDAR FUNCTION VERIFICATION Source optical generator ( ) screens ( )

Date of last calibration _____ This test recorded on tape# _____ track# _____

	1	2	3	4	5	6	7	8
Calibrated opacity	___	___	___	___	___	___	___	___
Calculated opacity	___	___	___	___	___	___	___	___
Recorded on file	___	___	___	___	___	___	___	___

OPERATOR'S SIGNATURE: _____ DATE: _____

WITNESS SIGNATURE: _____ DATE: _____

Figure AM1-11 Lidar Log Of Operations

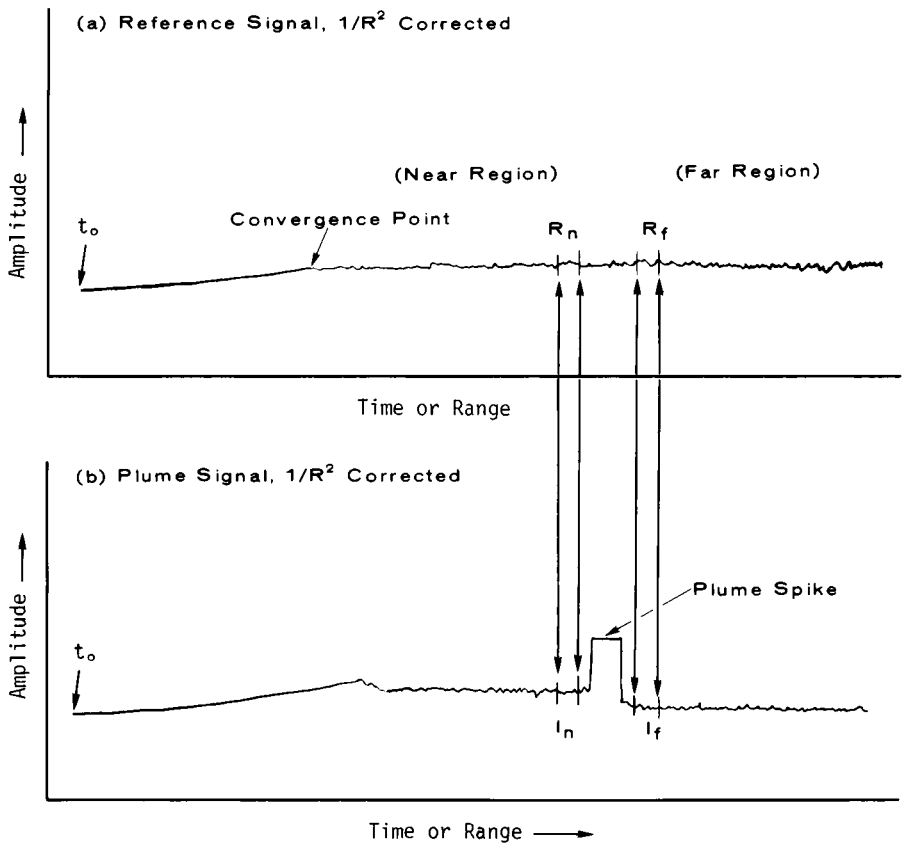

(a) Reference signal, $1/R^2$-corrected. This reference signal is for plume signal (b). R_n, R_f are chosen to coincide with I_n, I_f.

(b) Plume signal, $1/R^2$-corrected. The plume spike and the decrease in the backscatter signal amplitude in the far region are due to the opacity of the plume. I_n, I_f are chosen as indicated in Section 2.6.

Figure AM1-III. Plots of Lidar Backscatter Signals

2.6 Opacity Calculation and Data Analysis. Referring to the reference signal and plume signal in Figure AM1–III, the measured opacity (O_p) in percent for each lidar measurement is calculated using Equation AM1–2. ($O_p=1-T_p$; T_p is the plume transmittance.)

$$O_p = (100\%)\left[1 - \left(\frac{I_f}{R_f}\frac{R_n}{I_n}\right)^{\frac{1}{2}}\right], \qquad \text{(AM1-2)}$$

Where:

I_n=near-region pick interval signal amplitude, plume signal, $1/R^2$corrected,

I_f=far-region pick interval signal amplitude, plume signal, $1/R^2$corrected,

R_n=near-region pick interval signal amplitude, reference signal, $1/R^2$corrected, and

R_f=far-region pick interval signal amplitude, reference signal, $1/R^2$corrected.

The $1/R^2$ correction to the plume and reference signal amplitudes is made by multiplying the amplitude for each successive sample interval from the time reference, by the square of the lidar time (or range) associated with that sample interval [Reference 5.1].

The first step in selecting the pick intervals for Equation AM1–2 is to divide the plume signal amplitude by the reference signal amplitude at the same respective ranges to obtain a ''normalized'' signal. The pick intervals selected using this normalized signal, are a minimum of 15 m (100 nanoseconds) in length and consist of at least 5 contiguous sample intervals. In addition, the following criteria, listed in order of importance, govern pick interval selection. (1) The intervals shall be in a region of the normalized signal where the reference signal meets the requirements of Section 2.3 and is everywhere greater than zero. (2) The intervals (near and far) with the minimum average amplitude are chosen. (3) If more than one interval with the same minimum average amplitude is found, the interval closest to the plume is chosen. (4) The standard deviation, S_o, for the calculated opacity shall be 8% or less. (S_o is calculated by Equation AM1–7).

If S_o is greater than 8%, then the far pick interval shall be changed to the next interval of minimal average amplitude. If S_o is still greater than 8%, then this procedure is repeated for the far pick interval. This procedure may be repeated once again for the near pick interval, but if S_o remains greater than 8%, the plume signal shall be discarded.

The reference signal pick intervals, R_n and R_f, must be chosen over the same time interval as the plume signal pick intervals, I_n and I_f, respectively [Figure AM1–III]. Other methods of selecting pick intervals may be used if they give equivalent results. Field-oriented examples of pick interval selection are available in Reference 5.1.

The average amplitudes for each of the pick intervals, I_n, I_f, R_n, R_f, shall be calculated by averaging the respective individual amplitudes of the sample intervals from the plume signal and the associated reference signal each corrected for $1/R^2$. The amplitude of I_n shall be calculated according to Equation (AM–3).

$$I_n = \frac{1}{m}\sum_{i=1}^{m} I_{ni}, \qquad \text{(AM1-3)}$$

Where:

I_{ni}=the amplitude of the ith sample interval (near-region),

Σ=sum of the individual amplitudes for the sample intervals,

m=number of sample intervals in the pick interval, and

I_n=average amplitude of the near-region pick interval.

Similarly, the amplitudes for I_f, R_n, and R_f are calculated with the three expressions in Equation (AM1–4).

$$I_f = \frac{1}{m}\sum_{i=1}^{m} I_{fi}, \quad R_n = \frac{1}{m}\sum_{i=1}^{m} R_{ni}, \quad R_f = \frac{1}{m}\sum_{i=1}^{m} R_{fi}. \qquad \text{(AM1-4)}$$

The standard deviation, S_{In}, of the set of amplitudes for the near-region pick interval, I_n, shall be calculated using Equation (AM1–5).

Similarly, the standard deviations S_{If}, S_{Rn}, and S_{Rf} are calculated with the three expressions in Equation (AM1–6).

$$S_{In} = \left[\sum_{i=1}^{m} \frac{(I_{ni} - I_n)^2}{(m-1)} \right]^{1/2} . \qquad S_{If} = \left[\sum_{i=1}^{m} \frac{(I_{fi} - I_f)^2}{(m-1)} \right]^{1/2}$$

(AM1-5)

$$S_{Rn} = \left[\sum_{i=1}^{m} \frac{(R_{ni} - R_n)^2}{(m-1)} \right]^{1/2} ,$$

$$S_{Rf} = \left[\sum_{i=1}^{m} \frac{(R_{fi} - R_f)^2}{(m-1)} \right]^{1/2} .$$

(AM1-6)

The standard deviation, S_o, for each associated opacity value, O_p, shall be calculated using Equation (AM1–7).

$$S_o = \frac{(100\%)}{2} \left(\frac{I_f}{R_f} \frac{R_n}{I_n} \right)^{1/2} \left[\frac{S_{In}^2}{I_n^2} + \frac{S_{If}^2}{I_f^2} + \frac{S_{Rn}^2}{R_n^2} + \frac{S_{Rf}^2}{R_f^2} \right]^{1/2}$$

(AM1-7)

The calculated values of I_n, I_f, R_n, R_f, S_{In}, S_{If}, S_{Rn}, S_{Rf}, O_p, and S_o should be recorded. Any plume signal with an S_o greater than 8% shall be discarded.

2.6.1 Azimuth Angle Correction. If the azimuth angle correction to opacity specified in this section is performed, then the elevation angle correction specified in Section 2.6.2 shall not be performed. When opacity is measured in the residual region of an attached steam plume, and the lidar line-of-sight is not perpendicular to the plume, it may be necessary to correct the opacity measured by the lidar to obtain the opacity that would be measured on a path perpendicular to the plume. The following method, or any other method which produces equivalent results, shall be used to determine the need for a correction, to calculate the correction, and to document the point within the plume at which the opacity was measured.

Figure AM1–IV(b) shows the geometry of the opacity correction. L′ is the path through the plume along which the opacity measurement is made. P′ is the path perpendicular to the plume at the same point. The angle ε is the angle between L′ and the plume center line. The angle (π/2-ε), is the angle between the L′ and P′. The measured opacity, O_p, measured along the path L′ shall be corrected to obtain the corrected opacity, O_{pc}, for the path P′, using Equation (AM1–8).

$$O_{pc} = (100\%) \left[1 - (1 - 0.01\, O_p)^{\cos(\pi/2 - \varepsilon)} \right]$$

$$= (100\%) \left[1 - (1 - 0.01\, O_p)^{\sin \varepsilon} \right] \qquad \text{(AM1-8)}$$

The correction in Equation (AM1–8) shall be performed if the inequality in Equation (AM1–9) is true.

$$\varepsilon \geq \sin^{-1}\left[\frac{\ln(101 - O_p)}{\ln(100 - O_p)}\right] \qquad \text{(AM1-9)}$$

Figure AM1–IV(a) shows the geometry used to calculate ε and the position in the plume at which the lidar measurement is made. This analysis assumes that for a given lidar measurement, the range from the lidar to the plume, the elevation angle of the lidar from the horizontal plane, and the azimuth angle of the lidar from an arbitrary fixed reference in the horizontal plane can all be obtained directly.

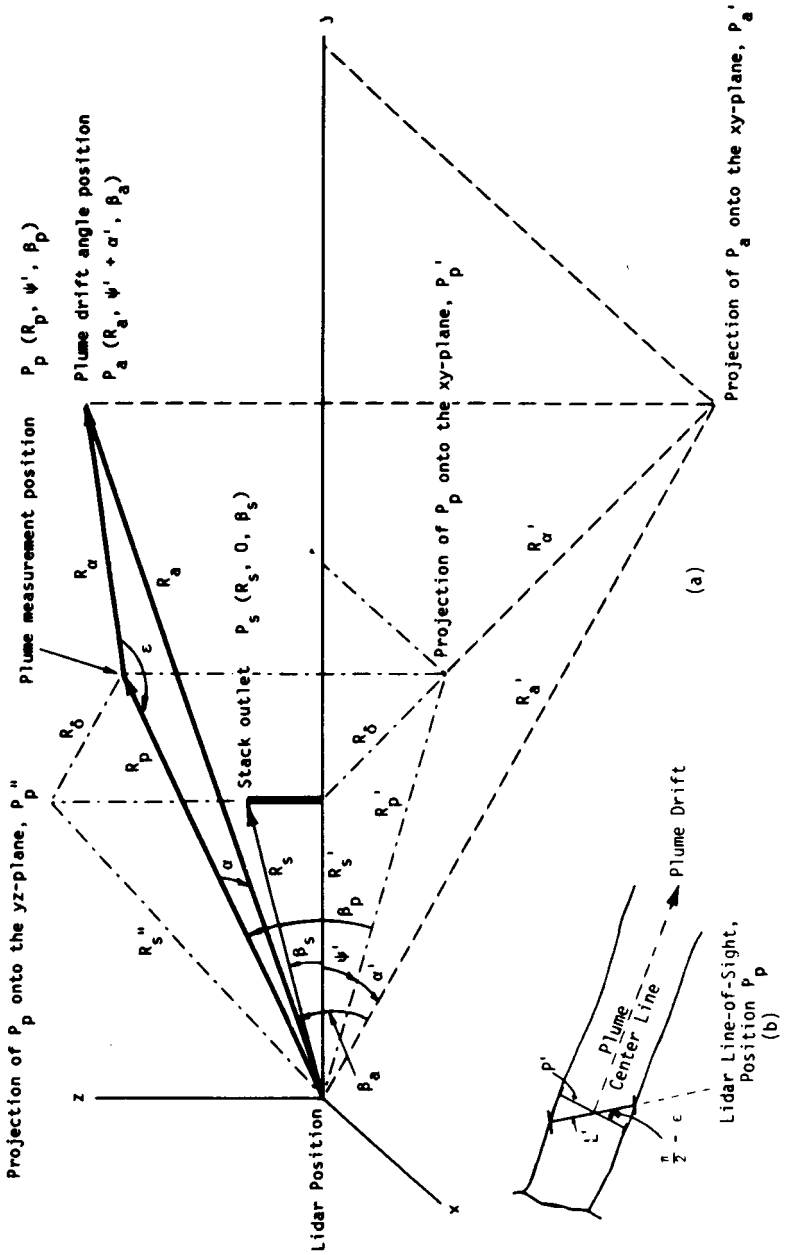

Figure AMI - IV. Correction in Opacity for Drift of the Residual Region of an Attached Steam Plume.

R_s=range from lidar to source* .....
β_s=elevation angle of R_s* .....
R_p=range from lidar to plume at the opacity measurement point* .....
β_p=elevation angle of R_p* .....
R_a=range from lidar to plume at some arbitrary point, P_a, so the drift angle of the plume can be determined* .....
β_a=elevation angle of R_a* .....
α=angle between R_p and R_a .....
R'_s=projection of R_s in the horizontal plane .....
R'_p=projection of R_p in the horizontal plane .....

R'_a=projection of R_a in the horizontal plane
ψ'=angle between R'_s and R'_p* .....
α'=angle between R'_p and R'_a* .....
R≤=distance from the source to the opacity measurement point projected in the horizontal plane .....
Rθ=distance from opacity measurement point P_p to the point in the plume P_a. .....

$$0_{pc} = 1 - (1 - 0_p)^{\mathrm{Cos}\,(\pi/2-\varepsilon)} = 1 - (1 - 0_p)^{\mathrm{Sin}\,\varepsilon} \qquad \text{(AMI-8)}$$

The correction angle ε shall be determined using Equation AM1–10.

Where:

$\alpha = \mathrm{Cos}^{-1}\,(\mathrm{Cos}\beta_p\ \mathrm{Cos}\beta_a\ \mathrm{Cos}\alpha' + \mathrm{Sin}\beta_p\ \mathrm{Sin}\beta_a)$,

and

$R\theta = (R_p2 + R_a2 - 2\ R_p\ R_a\ \mathrm{Cos}\alpha)^{1/2}$

R≤, the distance from the source to the opacity measurement point projected in the horizontal plane, shall be determined using Equation AM1–11.

$$R_\delta = (R'^2_s + R'^2_p - 2R'_sR'_p\mathrm{Cos}\psi')^{\frac{1}{2}}, \qquad \text{(AM1-11)}$$

Where:

$R'_s = R_s\ \mathrm{Cos}\ \beta_s$, and

$R'_p = R_p\ \mathrm{Cos}\ \beta_p$.

In the special case where the plume centerline at the opacity measurement point is horizontal, parallel to the ground, Equation AM1–12 may be used to determine ε instead of Equation AM1–10.

$$\varepsilon = \mathrm{Cos}^{-1}\left[\frac{R_p^2 + R_\delta^2 - R''^2_s}{2\ R_p\ R_\delta}\right] \qquad \text{(AM1-12)}$$

Where:

$R''_s = (R'^2_s + R_p^2\mathrm{Sin}^2\beta_p)^{1/2}$.

If the angle ε is such that ε≤ 30° or ε ≥ 150°, the azimuth angle correction shall not be performed and the associated opacity value shall be discarded.

2.6.2 Elevation Angle Correction. An individual lidar-measured opacity, O_p, shall be corrected for elevation angle if the laser elevation or inclination angle, β_p [Figure AM1–V], is greater than or equal to the value calculated in Equation AM1–13.

$$\beta_p \geq \mathrm{Cos}^{-1}\left[\frac{\ln\,(101 - 0_p)}{\ln\,(100 - 0_p)}\right] \qquad \text{(AM1-13)}$$

The measured opacity, O_p, along the lidar path L, is adjusted to obtain the corrected opacity, O_{pc}, for the actual plume (horizontal) path, P, by using Equation (AM1–14).

*Obtained directly from lidar. These values should be recorded.

$$O_{pc} = (100\%)\left[1-\left(1-0.01\,O_p\right)^{\frac{\cos\beta}{p}}\right], \qquad (AM1\text{-}14)$$

Where:

β_p=lidar elevation or inclination angle,

O_p=measured opacity along path L, and

O_{pc}=corrected opacity for the actual plume thickness P.

The values for β_p, O_p and O_{pc} should be recorded.

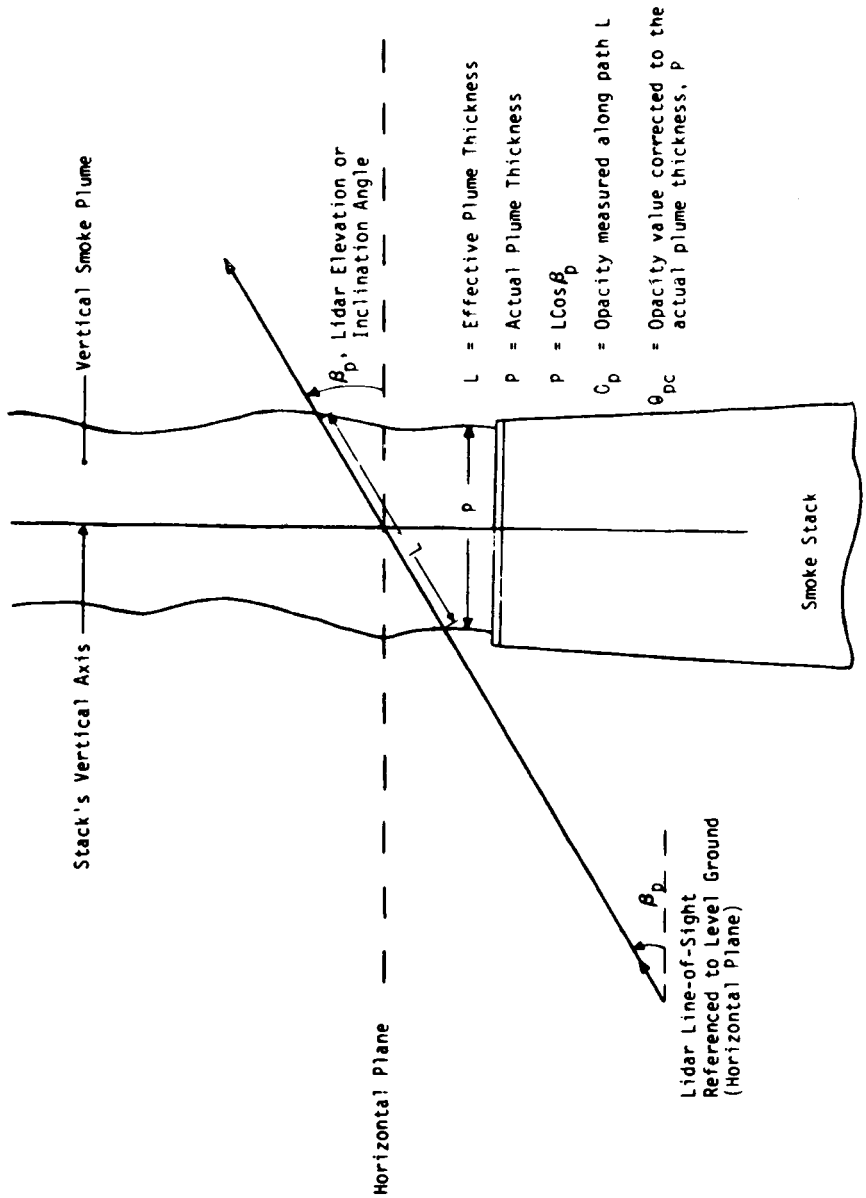

Figure AM1-V. Elevation Angle Correction for Vertical Plumes.

2.6.3 Determination of Actual Plume Opacity. Actual opacity of the plume shall be determined by Equation AM1–15.

$$O_{pa} = O_{pc} - [2\ S_o + 5\%]. \quad \text{(AM1-15)}$$

2.6.4 Calculation of Average Actual Plume Opacity. The average of the actual plume opacity, O_{pa}, shall be calculated as the average of the consecutive individual actual opacity values, O_{pa}, by Equation AM1–16.

$$\bar{O}_{pa} = \frac{1}{n} \sum_{k=1}^{n} (O_{pa})_k \quad , \qquad \text{(AM1-16)}$$

Where:

$(O_{pa})_k$=the kth actual opacity value in an averaging interval containing n opacity values; k is a summing index.

Σ=the sum of the individual actual opacity values.

n=the number of individual actual opacity values contained in the averaging interval.

O_{pa}=average actual opacity calculated over the averaging interval.

3. *Lidar Performance Verification*

The lidar shall be subjected to two types of performance verifications that shall be performed in the field. The annual calibration, conducted at least once a year, shall be used to directly verify operation and performance of the entire lidar system. The routine verification, conducted for each emission source measured, shall be used to insure proper performance of the optical receiver and associated electronics.

3.1 Annual Calibration Procedures. Either a plume from a smoke generator or screen targets shall be used to conduct this calibration.

If the screen target method is selected, five screens shall be fabricated by placing an opaque mesh material over a narrow frame (wood, metal extrusion, etc.). The screen shall have a surface area of at least one square meter. The screen material should be chosen for precise optical opacities of about 10, 20, 40, 60, and 80%. Opacity of each target shall be optically determined and should be recorded. If a smoke generator plume is selected, it shall meet the requirements of Section 3.3 of Reference Method 9. This calibration shall be performed in the field during calm (as practical) atmospheric conditions. The lidar shall be positioned in accordance with Section 2.1.

The screen targets must be placed perpendicular to and coincident with the lidar line-of-sight at sufficient height above the ground (suggest about 30 ft) to avoid ground-level dust contamination. Reference signals shall be obtained just prior to conducting the calibration test.

The lidar shall be aimed through the center of the plume within 1 stack diameter of the exit, or through the geometric center of the screen target selected. The lidar shall be set in operation for a 6-minute data run at a nominal pulse rate of 1 pulse every 10 seconds. Each backscatter return signal and each respective opacity value obtained from the smoke generator transmissometer, shall be obtained in temporal coincidence. The data shall be analyzed and reduced in accordance with Section 2.6 of this method. This calibration shall be performed for 0% (clean air), and at least five other opacities (nominally 10, 20, 40, 60, and 80%).

The average of the lidar opacity values obtained during a 6-minute calibration run shall be calculated and should be recorded. Also the average of the opacity values obtained from the smoke generator transmissometer for the same 6-minute run shall be calculated and should be recorded.

Alternate calibration procedures that do not meet the above requirements but produce equivalent results may be used.

3.2 Routine Verification Procedures. Either one of two techniques shall be used to conduct this verification. It shall be performed at least once every 4 hours for each emission source measured. The following parameters shall be directly verified.

1) The opacity value of 0% plus a minimum of 5 (nominally 10, 20, 40, 60, and 80%) opacity values shall be verified through the PMT detector and data processing electronics.

2) The zero-signal level (receiver signal with no optical signal from the source present) shall be inspected to insure that no spurious noise is present in the signal. With the entire lidar receiver and analog/digital electronics turned on and adjusted for normal operating performance, the following procedures shall be used for Techniques 1 and 2, respectively.

3.2.1 Procedure for Technique 1. This test shall be performed with no ambient or stray light reaching the PMT detector. The narrow band filter (694.3 nanometers peak) shall be removed from its position in front of the PMT detector. Neutral density filters of nominal opacities of 10, 20, 40, 60, and 80% shall be used. The recommended test configuration is depicted in Figure AM1–VI.

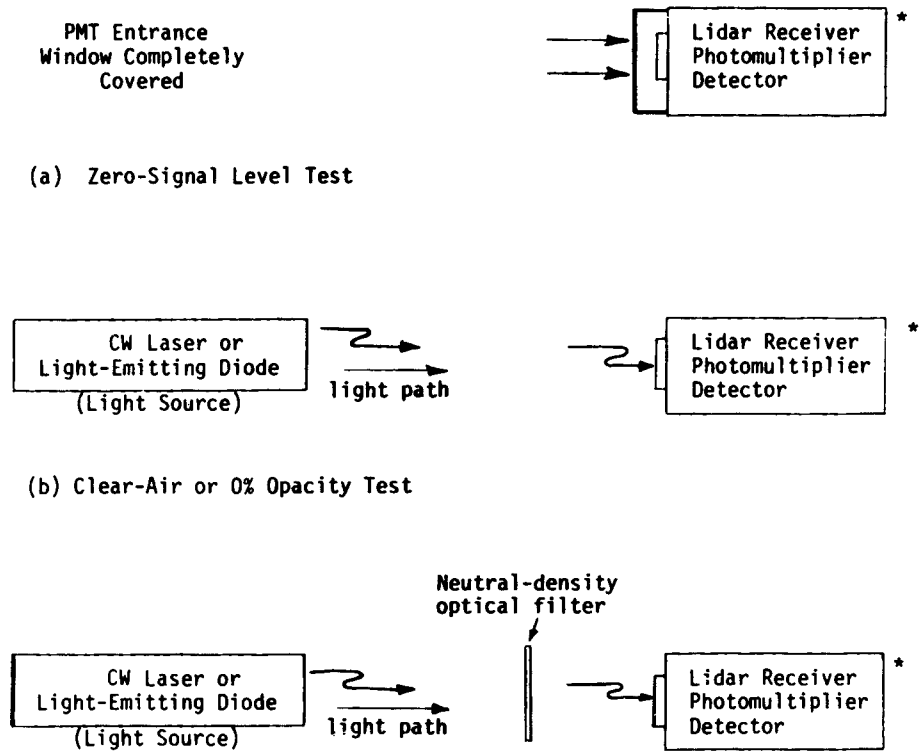

Figure AM1-VI. Test Configuration for Technique 1.

The zero-signal level shall be measured and should be recorded, as indicated in Figure AM1–VI(a). This simulated clear-air or 0% opacity value shall be tested in using the selected light source depicted in Figure AM1–VI(b).

The light source either shall be a continuous wave (CW) laser with the beam mechanically chopped or a light emitting diode controlled with a pulse generator (rectangular pulse). (A laser beam may have to be attenuated so as not to saturate the PMT detector). This signal level shall be measured

and should be recorded. The opacity value is calculated by taking two pick intervals [Section 2.6] about 1 microsecond apart in time and using Equation (AM1–2) setting the ratio $R_n/R_f=1$. This calculated value should be recorded.

The simulated clear-air signal level is also employed in the optical test using the neutral density filters. Using the test configuration in Figure AM1–VI(c), each neutral density filter shall be separately placed into the light path from the light source to the PMT detector. The signal level shall be measured and should be recorded. The opacity value for each filter is calculated by taking the signal level for that respective filter (I_f), dividing it by the 0% opacity signal level (I_n) and performing the remainder of the calculation by Equation (AM1–2) with $R_n/R_f=1$. The calculated opacity value for each filter should be recorded.

The neutral density filters used for Technique 1 shall be calibrated for actual opacity with accuracy of ±2% or better. This calibration shall be done monthly while the filters are in use and the calibrated values should be recorded.

3.2.2 Procedure for Technique 2. An optical generator (built-in calibration mechanism) that contains a light-emitting diode (red light for a lidar containing a ruby laser) is used. By injecting an optical signal into the lidar receiver immediately ahead of the PMT detector, a backscatter signal is simulated. With the entire lidar receiver electronics turned on and adjusted for normal operating performance, the optical generator is turned on and the simulation signal (corrected for $1/R^2$) is selected with no plume spike signal and with the opacity value equal to 0%. This simulated clear-air atmospheric return signal is displayed on the system's video display. The lidar operator then makes any fine adjustments that may be necessary to maintain the system's normal operating range.

The opacity values of 0% and the other five values are selected one at a time in any order. The simulated return signal data should be recorded. The opacity value shall be calculated. This measurement/calculation shall be performed at least three times for each selected opacity value. While the order is not important, each of the opacity values from the optical generator shall be verified. The calibrated optical generator opacity value for each selection should be recorded.

The optical generator used for Technique 2 shall be calibrated for actual opacity with an accuracy of ±1% or better. This calibration shall be done monthly while the generator is in use and calibrated value should be recorded.

Alternate verification procedures that do not meet the above requirements but produce equivalent results may be used.

3.3 Deviation. The permissible error for the annual calibration and routine verification are:

3.3.1 Annual Calibration Deviation.

3.3.1.1 Smoke Generator. If the lidar-measured average opacity for each data run is not within ±5% (full scale) of the respective smoke generator's average opacity over the range of 0% through 80%, then the lidar shall be considered out of calibration.

3.3.1.2 Screens. If the lidar-measured average opacity for each data run is not within ±3% (full scale) of the laboratory-determined opacity for each respective simulation screen target over the range of 0% through 80%, then the lidar shall be considered out of calibration.

3.3.2 Routine Verification Error. If the lidar-measured average opacity for each neutral density filter (Technique 1) or optical generator selection (Technique 2) is not within ±3% (full scale) of the respective laboratory calibration value then the lidar shall be considered non-operational.

4. *Performance/Design Specification for Basic Lidar System*

4.1 Lidar Design Specification. The essential components of the basic lidar system are a pulsed laser (transmitter), optical receiver, detector, signal processor, recorder, and an aiming device that is used in aiming the lidar transmitter and receiver. Figure AM1–VII shows a functional block diagram of a basic lidar system.

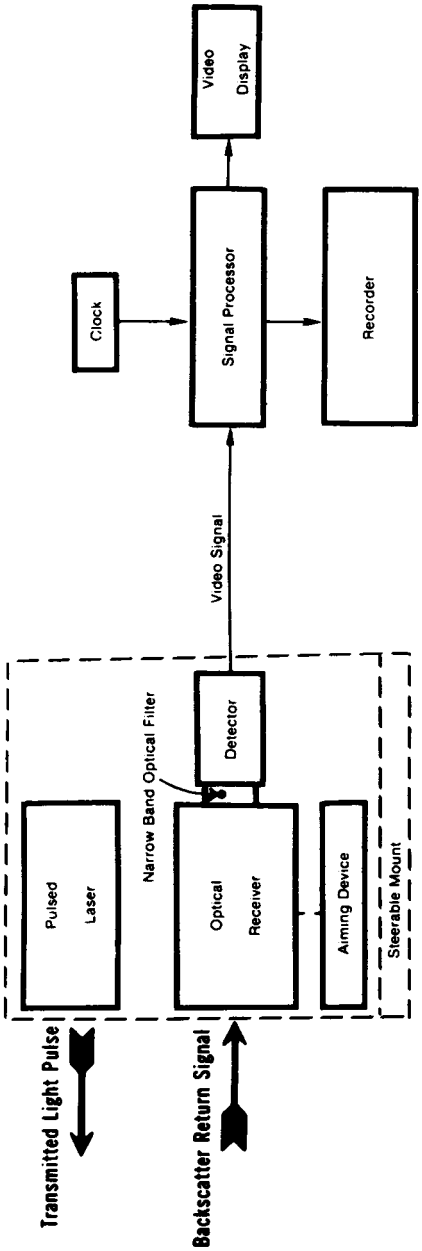

Figure AM1-VII. Functional Block Diagram of a Basic Lidar System

4.2 Performance Evaluation Tests. The owner of a lidar system shall subject such a lidar system to the performance verification tests described in Section 3, prior to first use of this method. The annual calibration shall be performed for three separate, complete

runs and the results of each should be recorded. The requirements of Section 3.3.1 must be fulfilled for each of the three runs.

Once the conditions of the annual calibration are fulfilled the lidar shall be subjected to the routine verification for three separate complete runs. The requirements of Section 3.3.2 must be fulfilled for each of the three runs and the results should be recorded. The Administrator may request that the results of the performance evaluation be submitted for review.

5. *References*

5.1 The Use of Lidar for Emissions Source Opacity Determination, U.S. Environmental Protection Agency, National Enforcement Investigations Center, Denver, CO. EPA–330/1–79–003–R, Arthur W. Dybdahl, current edition [NTIS No. PB81–246662].

5.2 Field Evaluation of Mobile Lidar for the Measurement of Smoke Plume Opacity, U.S. Environmental Protection Agency, National Enforcement Investigations Center, Denver, CO. EPA/NEIC–TS–128, February 1976.

5.3 Remote Measurement of Smoke Plume Transmittance Using Lidar, C. S. Cook, G. W. Bethke, W. D. Conner (EPA/RTP). Applied Optics 11, pg 1742. August 1972.

5.4 Lidar Studies of Stack Plumes in Rural and Urban Environments, EPA–650/4–73–002, October 1973.

5.5 American National Standard for the Safe Use of Lasers ANSI Z 136.1–176, March 8, 1976.

5.6 U.S. Army Technical Manual TB MED 279, Control of Hazards to Health from Laser Radiation, February 1969.

5.7 Laser Institute of America Laser Safety Manual, 4th Edition.

5.8 U.S. Department of Health, Education and Welfare, Regulations for the Administration and Enforcement of the Radiation Control for Health and Safety Act of 1968, January 1976.

5.9 Laser Safety Handbook, Alex Mallow, Leon Chabot, Van Nostrand Reinhold Co., 1978.

METHOD 10—DETERMINATION OF CARBON MONOXIDE EMISSIONS FROM STATIONARY SOURCES

1. *Principle and Applicability*

1.1 Principle. An integrated or continuous gas sample is extracted from a sampling point and analyzed for carbon monoxide (CO) content using a Luft-type nondispersive infrared analyzer (NDIR) or equivalent.

1.2 Applicability. This method is applicable for the determination of carbon monoxide emissions from stationary sources only when specified by the test procedures for determining compliance with new source performance standards. The test procedure will indicate whether a continuous or an integrated sample is to be used.

2. *Range and Sensitivity*

2.1 Range. 0 to 1,000 ppm.

2.2 Sensitivity. Minimum detectable concentration is 20 ppm for a 0 to 1,000 ppm span.

3. *Interferences*

Any substance having a strong absorption of infrared energy will interfere to some extent. For example, discrimination ratios for water (H_2O) and carbon dioxide (CO_2) are 3.5 percent H_2O per 7 ppm CO and 10 percent CO_2 per 10 ppm CO, respectively, for devices measuring in the 1,500 to 3,000 ppm range. For devices measuring in the 0 to 100 ppm range, interference ratios can be as high as 3.5 percent H_2O per 25 ppm CO and 10 percent CO_2 per 50 ppm CO. The use of silica gel and ascarite traps will alleviate the major interference problems. The measured gas volume must be corrected if these traps are used.

4. *Precision and Accuracy*

4.1 Precision. The precision of most NDIR analyzers is approximately ±2 percent of span.

4.2 Accuracy. The accuracy of most NDIR analyzers is approximately ±5 percent of span after calibration.

5. *Apparatus*

5.1 Continuous Sample (Figure 10–1).

5.1.1 Probe. Stainless steel or sheathed Pyrex[1] glass, equipped with a filter to remove particulate matter.

5.1.2 Air-Cooled Condenser or Equivalent. To remove any excess moisture.

5.2 Integrated Sample (Figure 10–2).

5.2.1 Probe. Stainless steel or sheathed Pyrex glass, equipped with a filter to remove particulate matter.

5.2.2 Air-Cooled Condenser or Equivalent. To remove any excess moisture.

5.2.3 Valve. Needle valve, or equivalent, to adjust flow rate.

5.2.4 Pump. Leak-free diaphragm type, or equivalent, to transport gas.

5.2.5 Rate Meter. Rotameter, or equivalent, to measure a flow range from 0 to 1.0 liter per min (0.035 cfm).

5.2.6 Flexible Bag. Tedlar, or equivalent, with a capacity of 60 to 90 liters (2 to 3 ft^3). Leak-test the bag in the laboratory before using by evacuating bag with a pump followed by a dry gas meter. When evacuation is complete, there should be no flow through the meter.

5.2.7 Pitot Tube. Type S, or equivalent, attached to the probe so that the sampling rate can be regulated proportional to the stack gas velocity when velocity is varying with the time or a sample traverse is conducted.

5.3 Analysis (Figure 10–3).

[1] Mention of trade names or specific products does not constitute endorsement by the Environmental Protection Agency.

5.3.1 Carbon Monoxide Analyzer. Nondispersive infrared spectrometer, or equivalent. This instrument should be demonstrated, preferably by the manufacturer, to meet or exceed manufacturer's specifications and those described in this method.

5.3.2 Drying Tube. To contain approximately 200 g of silica gel.

5.3.3 Calibration Gas. Refer to section 6.1.

5.3.4 Filter. As recommended by NDIR manufacturer.

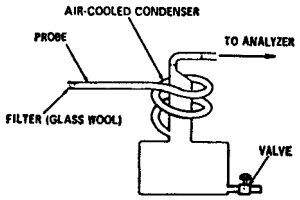

Figure 10-1. Continuous sampling train.

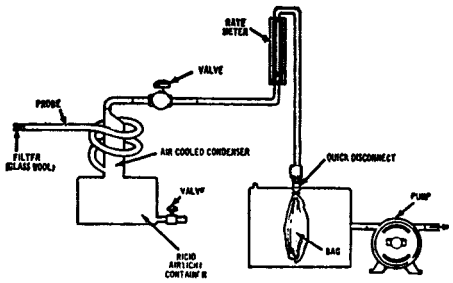

Figure 10-2. Integrated gas-sampling train.

5.3.5 CO_2 Removal Tube. To contain approximately 500 g of ascarite.

5.3.6 Ice Water Bath. For ascarite and silica gel tubes.

5.3.7 Valve. Needle valve, or equivalent, to adjust flow rate

5.3.8 Rate Meter. Rotameter or equivalent to measure gas flow rate of 0 to 1.0 liter per min (0.035 cfm) through NDIR.

5.3.9 Recorder (*optional*). To provide permanent record of NDIR readings.

6. *Reagents*

6.1 Calibration Gases. Known concentration of CO in nitrogen (N_2) for instrument span, prepurified grade of N_2 for zero, and two additional concentrations corresponding approximately to 60 percent and 30 percent span. The span concentration shall not exceed 1.5 times the applicable source performance standard. The calibration gases shall be certified by the manufacturer to be within ±2 percent of the specified concentration.

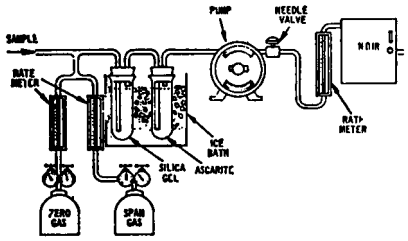

Figure 10-3. Analytical equipment.

6.2 Silica Gel. Indicating type, 6 to 16 mesh, dried at 175 °C (347 °F) for 2 hours.

6.3 Ascarite. Commercially available.

7. *Procedure*

7.1 Sampling.

7.1.1 Continuous Sampling. Set up the equipment as shown in Figure 10–1 making sure all connections are leak free. Place the probe in the stack at a sampling point and purge the sampling line. Connect the analyzer and begin drawing sample into the analyzer. Allow 5 minutes for the system to stabilize, then record the analyzer reading as required by the test procedure. (See section 7.2 and 8). CO_2 content of the gas may be determined by using the Method 3 integrated sample procedure, or by weighing the ascarite CO_2 removal tube and computing CO_2 concentration from the gas volume sampled and the weight gain of the tube.

7.1.2 Integrated Sampling. Evacuate the flexible bag. Set up the equipment as shown in Figure 10–2 with the bag disconnected. Place the probe in the stack and purge the sampling line. Connect the bag, making sure that all connections are leak free. Sample at a rate proportional to the stack velocity. CO_2 content of the gas may be determined by using the Method 3 integrated sample procedures, or by weighing the ascarite CO_2 removal tube and computing CO_2 concentration from the gas volume sampled and the weight gain of the tube.

7.2 CO Analysis. Assemble the apparatus as shown in Figure 10–3, calibrate the instrument, and perform other required operations as described in section 8. Purge analyzer with N_2 prior to introduction of each sample. Direct the sample stream through the instrument for the test period, recording the readings. Check the zero and span again after the test to assure that any drift or malfunction is detected. Record the sample data on Table 10–1.

8. *Calibration*

Assemble the apparatus according to Figure 10–3. Generally an instrument requires a warm-up period before stability is obtained. Follow the manufacturer's instructions for specific procedure. Allow a minimum time of 1 hour for warm-up. During this time check

the sample conditioning apparatus, i.e., filter, condenser, drying tube, and CO_2 removal tube, to ensure that each component is in good operating condition. Zero and calibrate the instrument according to the manufacturer's procedures using, respectively, nitrogen and the calibration gases.

TABLE 10–1—FIELD DATA

	Comments
Location	
Test	
Date	
Operator	

Clock time	Rotameter setting, liters per minute (cubic feet per minute)

9. *Calculation*

Calculate the concentration of carbon monoxide in the stack using Equation 10–1.

$$C_{CO\ stack}=C_{CO\ NDIR}(1-F_{co2})$$

Eq. 10–1

Where:

$C_{CO\ stack}$=Concentration of CO in stack, ppm by volume (dry basis).

$C_{CO\ NDIR}$=Concentration of CO measured by NDIR analyzer, ppm by volume (dry basis).

F_{CO2}=Volume fraction of CO_2 in sample, i.e., percent CO_2 from Orsat analysis divided by 100.

10. Alternative Procedures

10.1 Interference Trap. The sample conditioning system described in Method 10A, sections 2.1.2 and 4.2, may be used as an alternative to the silica gel and ascarite traps.

11. *Bibliography*

1. McElroy, Frank, The Intertech NDIR–CO Analyzer, Presented at 11th Methods Conference on Air Pollution, University of California, Berkeley, CA. April 1, 1970.
2. Jacobs, M. B., et al., Continuous Determination of Carbon Monoxide and Hydrocarbons in Air by a Modified Infrared Analyzer, J. Air Pollution Control Association, 9(2): 110–114. August 1959.
3. MSA LIRA Infrared Gas and Liquid Analyzer Instruction Book, Mine Safety Appliances Co., Technical Products Division, Pittsburgh, PA.
4. Models 215A, 315A, and 415A Infrared Analyzers, Beckman Instruments, Inc., Beckman Instructions 1635–B, Fullerton, CA. October 1967.
5. Continuous CO Monitoring System, Model A5611, Intertech Corp., Princeton, NJ.
6. UNOR Infrared Gas Analyzers, Bendix Corp., Ronceverte, WV

ADDENDA

A. PERFORMANCE SPECIFICATIONS FOR NDIR CARBON MONOXIDE ANALYZERS

Range (minimum)	0–1000 ppm.
Output (minimum)	0–10mV.
Minimum detectable sensitivity.	20 ppm.
Rise time, 90 percent (maximum).	30 seconds.
Fall time, 90 percent (maximum).	30 seconds.
Zero drift (maximum)	10% in 8 hours.
Span drift (maximum)	10% in 8 hours.
Precision (minimum)	±2% of full scale.
Noise (maximum)	±1% of full scale.
Linearity (maximum deviation)	2% of full scale.
Interference rejection ratio	CO_2—1000 to 1, H_2O—500 to 1.

B. *Definitions of Performance Specifications.*

Range— The minimum and maximum measurement limits.

Output— Electrical signal which is proportional to the measurement; intended for connection to readout or data processing devices. Usually expressed as millivolts or milliamps full scale at a given impedance.

Full scale— The maximum measuring limit for a given range.

Minimum detectable sensitivity— The smallest amount of input concentration that can be detected as the concentration approaches zero.

Accuracy— The degree of agreement between a measured value and the true value; usually expressed as ± percent of full scale.

Time to 90 percent response— The time interval from a step change in the input concentration at the instrument inlet to a reading of 90 percent of the ultimate recorded concentration.

Rise Time (90 percent)—The interval between initial response time and time to 90 percent response after a step increase in the inlet concentration.

Fall Time (90 percent)—The interval between initial response time and time to 90 percent response after a step decrease in the inlet concentration.

Zero Drift— The change in instrument output over a stated time period, usually 24 hours, of unadjusted continuous operation when the input concentration is zero; usually expressed as percent full scale.

Span Drift— The change in instrument output over a stated time period, usually 24 hours, of unadjusted continuous operation when the input concentration is a stated upscale value; usually expressed as percent full scale.

Precision— The degree of agreement between repeated measurements of the same concentration, expressed as the average deviation of the single results from the mean.

Noise—Spontaneous deviations from a mean output not caused by input concentration changes.

Linearity—The maximum deviation between an actual instrument reading and the reading predicted by a straight line drawn between upper and lower calibration points.

METHOD 10A—DETERMINATION OF CARBON MONOXIDE EMISSIONS IN CERTIFYING CONTINUOUS EMISSION MONITORING SYSTEMS AT PETROLEUM REFINERIES

1. Applicability and Principle

1.1 Applicability. This method applies to the measurement of carbon monoxide (CO) at petroleum refineries. This method serves as the reference method in the relative accuracy test for nondispersive infrared (NDIR) CO continuous emission monitoring systems (CEMS's) that are required to be installed in petroleum refineries on fluid catalytic cracking unit catalyst regenerators [40 CFR Part 60.105(a)(2)].

1.2 Principle. An integrated gas sample is extracted from the stack, passed through an alkaline permanganate solution to remove sulfur and nitrogen oxides, and collected in a Tedlar bag. The CO concentration in the sample is measured spectrophotometrically using the reaction of CO with p-sulfaminobenzoic acid.

1.3 Range and Sensitivity.

1.3.1 Range. Approximately 3 to 1800 ppm CO. Samples having concentrations below 400 ppm are analyzed at 425 nm, and samples having concentrations above 400 ppm are analyzed at 600 nm.

1.3.2 Sensitivity. The detection limit is 3 ppm based on three times the standard deviation of the mean reagent blank values.

1.4 Interferences. Sulfur oxides, nitric oxide, and other acid gases interfere with the colorimetric reaction. They are removed by passing the sampled gas through an alkaline potassium permanganate scrubbing solution. Carbon dioxide (CO_2) does not interfere, but, because it is removed by the scrubbing solution, its concentration must be measured independently and an appropriate volume correction made to the sampled gas.

1.5 Precision, Accuracy, and Stability.

1.5.1 Precision. The estimated intralaboratory standard deviation of the method is 3 percent of the mean for gas samples analyzed in duplicate in the concentration range of 39 to 412 ppm. The interlaboratory precision has not been established.

1.5.2 Accuracy. The method contains no significant biases when compared to an NDIR analyzer calibrated with National Bureau of Standards (NBS) standards.

1.5.3 Stability. The individual components of the colorimetric reagent are stable for at least 1 month. The colorimetric reagent must be used within 2 days after preparation to avoid excessive blank correction. The samples in the Tedlar[1] bag should be stable for at least 1 week if the bags are leak-free.

2. Apparatus

2.1 Sampling. The sampling train is shown in Figure 10A–1, and component parts are discussed below:

[1] Mention of trade names or commercial products in this publication does not constitute the endorsement or recommendation for use by the Environmental Protection Agency.

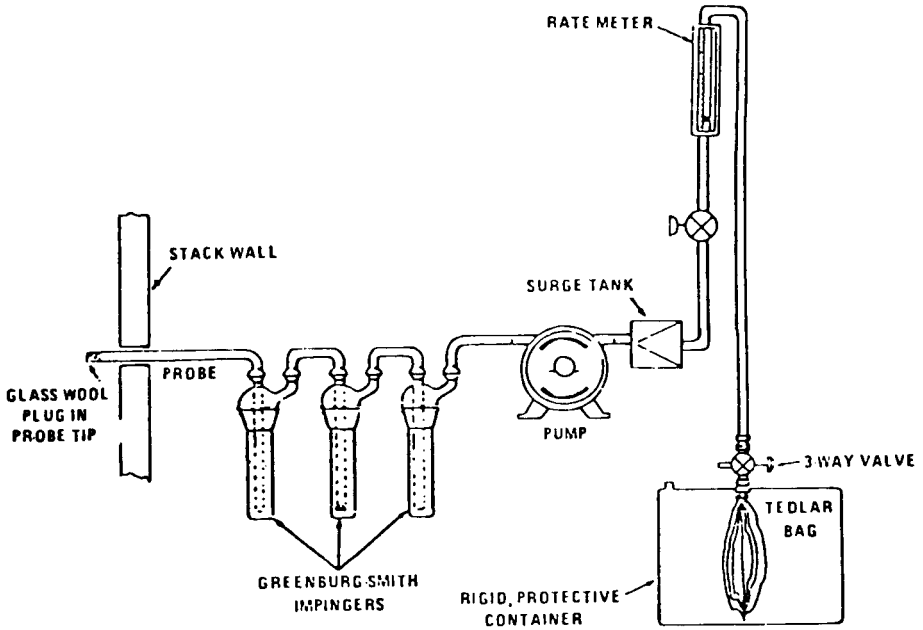

Figure 10A-1. Sampling train.

2.1.1 Probe. Stainless steel, sheathed Pyrex glass, or equivalent, equipped with a glass wool plug to remove particulate matter.

2.1.2 Sample Conditioning System. Three Greenburg-Smith impingers connected in series with leak-free connections.

2.1.3 Pump. Leak-free pump with stainless steel and Teflon parts to transport sample at a flow rate of 300 ml/min to the flexible bag.

2.1.4 Surge Tank. Installed between the pump and the rate meter to eliminate the pulsation effect of the pump on the rate meter.

2.1.5 Rate Meter. Rotameter, or equivalent, to measure flow rate at 300 ml/min. Calibrate according to Section 5.2.

2.1.6 Flexible Bag. Tedlar, or equivalent, with a capacity of 10 liters and equipped with a sealing quick-connect plug. The bag must be leak-free according to Section 4.1. For protection, it is recommened that the bag be enclosed with a rigid container.

2.1.7 Valves. Stainless-steel needle valve to adjust flow rate, and stainless-steel three-way valve, or equivalent.

2.1.8 CO_2 Analyzer. Method 3 or its approved alternative to measure CO_2 concentration to within 0.5 percent.

2.1.9 Volume Meter. Dry gas meter, calibrated and capable of measuring the sample volume under rotameter calibration conditions of 300 ml/min for 10 minutes.

2.1.10 Pressure Gauge. A water filled U-tube manometer, or equivalent, of about 28 cm (12 in.) to leak-check the flexible bag.

2.2 Analysis.

2.2.1 Spectrophotometer. Single- or double-beam to measure absorbance at 425 and 600 nm. Slit width should not exceed 20 nm.

2.2.2 Spectrophotometer Cells. 1-cm pathlength.

2.2.3 Vacuum Gauge. U-tube mercury manometer, 1 meter (39 in.), with 1-mm divisions, or other gauge capable of measuring pressure to within 1 mm Hg.

2.2.4 Pump. Capable of evacuating the gas reaction bulb to a pressure equal to or less than 40 mm Hg absolute, equipped with coarse and fine flow control valves.

2.2.5 Barometer. Mercury, aneroid, or other barometer capable of measuring atmospheric pressure to within 1 mm Hg.

2.2.6 Reaction Bulbs. Pyrex glass, 100.ml with Teflon stopcock (Figure 10A-2), leak-free at 40 mm Hg, designed so that 10 ml of the colorimetric reagent can be added and removed easily and accurately. Commercially available gas sample bulbs such as Supelco Catalog No. 2-2161 may also be used.

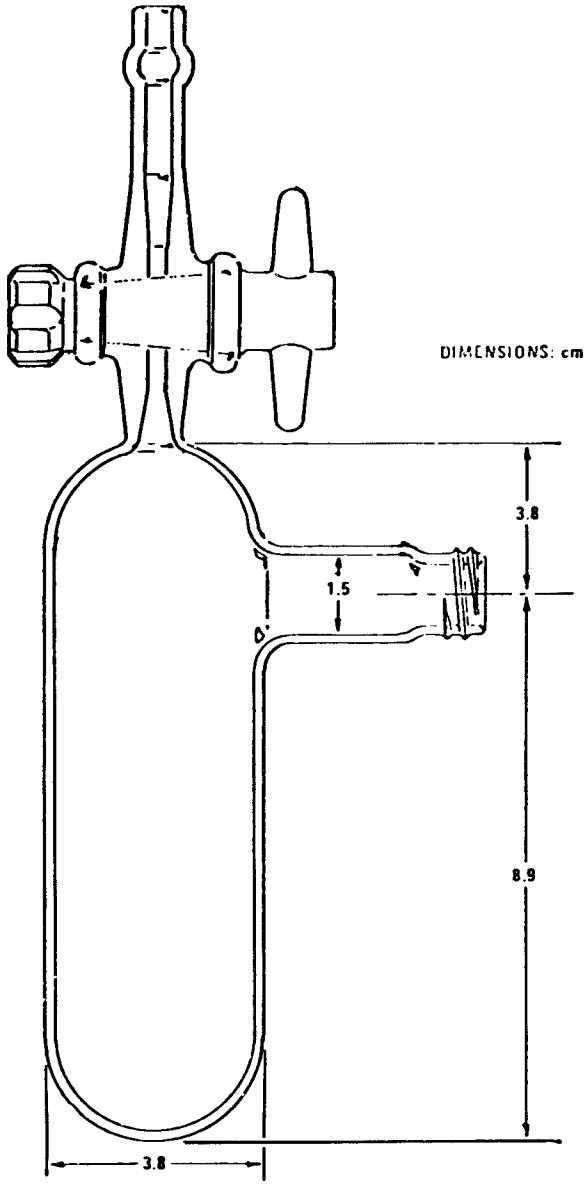

Figure 10A-2. Sample reaction bulbs.

2.2.7 Manifold. Stainless steel, with connections for three reaction bulbs and the appropriate connections for the manometer and sampling bag as shown in Figure 10A-3.

2.2.8 Pipets. Class A, 10-ml size.

2.2.9 Shaker Table. Reciprocating-stroke type such as Eberbach Corporation, Model 6015. A rocking arm or rotary-motion type

shaker may also be used. The shaker must be large enough to accommodate at least six gas sample bulbs simultaneously. It may be necessary to construct a table top extension for most commercial shakers to provide sufficient space for the needed bulbs (Figure 10A–4).

2.2.10 Valve. Stainless steel shut-off valve.

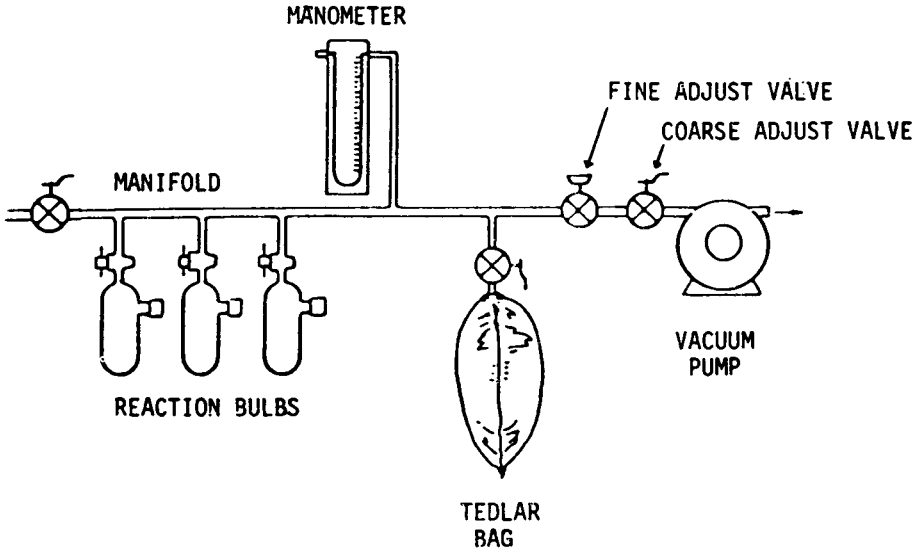

Figure 10A-3. Sample bulb filling system.

2.2.11 Analytical Balance. Capable of accurately weighing to 0.1 mg.

3. Reagents

Unless otherwise indicated, all reagents shall conform to the specifications established by the Committee on Analytical Reagents of the American Chemical Society, where such specifications are available, otherwise, the best available grade shall be used.

3.1 Sampling.

3.1.1 Water. Deionized distilled, as described in Method 6, Section 3.1.1.

3.1.2 Alkaline Permanganate Solution, 0.25 M $KMn0_4$/1.5 M NaOH. Dissolve 40 g $KMn0_4$ and 60 g NaOH in water, and dilute to 1 liter.

3.2 Analysis.

3.2.1 Water. Same as in Section 3.1.1.

3.2.2 1 M Sodium Hydroxide (NaOH) Solution. Dissolve 40 g NaOH in approximately 900 ml of water, cool, and dilute to 1 liter.

3.2.3 0.1 M Silver Nitrate ($AgNO_3$) *Solution.* Dissolve 8.5 g $AgNO_3$ in water, and dilute to 500 ml.

3.2.4 0.1 M Para-Sulfaminobenzoic Acid (p-SABA) Solution. Dissolve 10.0 g p-SABA in 0.1 M NaOH (prepared by diluting 50 ml of 1 M NaOH to 500 ml), and dilute to 500 ml with 0.1 M NaOH.

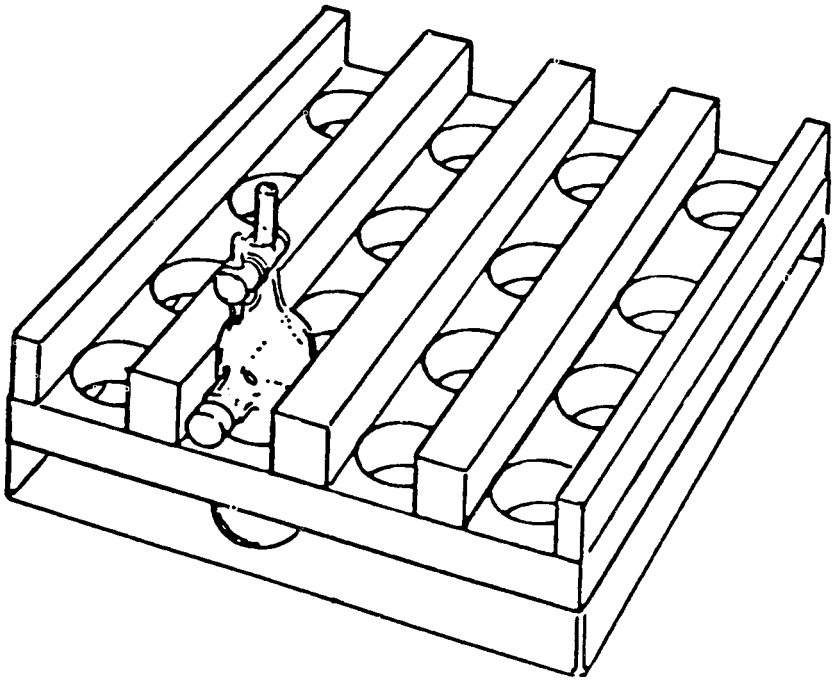

Figure 10A-4. Shaker table adapter.

3.2.5 Colorimetric Solution. To a flask, add 100 ml of p-SABA solution and 100 ml of $AgNO_3$ solution. Mix, and add 50 ml of 1 M NaOH with shaking. The resultant solution should be clear and colorless. This solution is acceptable for use for a period of 2 days.

3.2.6 Standard Gas Mixtures. Traceable to NBS standards and containing between 50 and 1000 ppm CO in nitrogen. At least two concentrations are needed to span each calibration range used (Section 5.3).

The calibration gases shall be certified by the manufacturer to be within 2 percent of the specified concentrations.

4. Procedure

4.1 Sample Bag Leak-checks. While a bag leak-check is required after bag use, it should also be done before the bag is used for sample collection. The bag should be leak-checked in the inflated and deflated condition according to the following procedures.

Connect the bag to a water manometer, and pressurize the bag to 5 to 10 cm H_20 (2 to 4 in. H_20). Allow the bag to stand for 60 minutes. Any displacement in the water manometer indicates a leak. Now, evacuate the bag with a leakless pump that is connected on the downstream side of a flow-indicating device such as a 0-to 100-ml/min rotameter or an impinger containing water. When the bag is completely evacuated, no flow should be evident if the bag is leak-free.

4.2 Sampling. Evacuate the Tedlar bag completely using a vacuum pump. Assemble the apparatus as shown in Figure 10A-1. Loosely pack glass wool in the tip of the probe. Place 400 ml of alkaline permanganate

solution in the first two impingers and 250 ml in the third. Connect the pump to the third impinger, and follow this with the surge tank, rate meter, and three-way valve. Do not connect the Tedlar bag to the system at this time.

Leak-check the sampling system by placing a vacuum gauge at or near the probe inlet, plugging the probe inlet, opening the three-way valve, and pulling a vacuum of approximately 250 mm Hg on the system while observing the rate meter for flow. If flow is indicated on the rate meter, do not proceed further until the leak is found and corrected.

Purge the system with sample gas by inserting the probe into the stack and drawing sample through the system at 300 ml/min ±10 percent for 5 minutes. Connect the evacuated Tedlar bag to the system, record the starting time, and sample at a rate of 300 ml/min for 30 minutes, or until the Tedlar bag is nearly full. Record the sampling time, the barometric pressure, and the ambient temperature. Purge the system as described above immediately before each sample.

The scrubbing solution is adequate for removing sulfur and nitrogen oxides from 50 liters of stack gas when the concentration of each is less than 1,000 ppm and the CO_2 concentration is less than 15 percent. Replace the scrubber solution after every fifth sample.

4.3 Carbon Dioxide Measurement. Measure the CO_2 content in the stack to the nearest 0.5 percent each time a CO sample is collected. A simultaneous grab sample analyzed by the Fyrite analyzer is acceptable.

4.4 Analysis. Assemble the system shown in Figure 10A–3, and record the information required in Table 10A-1 as it is obtained. Pipet 10.0 ml of the colorimetric reagent into each gas reaction bulb, and attach the bulbs to the system. Open the stopcocks to the reaction bulbs, but leave the valve to the Tedlar bag closed. Turn on the pump, fully open the coarse-adjust flow valve, and slowly open the fine-adjust valve until the pressure is reduced to at least 40 mm Hg. Now close the coarse adjust valve, and observe the manometer to be certain that the system is leak-free. Wait a minimum of 2 minutes. If the pressure has increased less than 1 mm, proceed as described below. If a leak is present, find and correct it before proceeding further.

TABLE 10A-1. DATA RECORDING SHEET FOR SAMPLES ANALYZED IN TRIPLICATE

Sample no./ Type	Room temp, °C	Stack % CO_2	Bulb no.	Bulb vol., liters	Reagent vol. in bulb, liter	Partial pressure of gas in bulb mm Hg	P_{bar}, mm Hg	Shaking time, min	Abs versus water	$A - A_r$	A_s	Avg. A_s
Blank												
Std. 1												
Std. 2												
Sample 1												
Sample 2												
Sample 3												

Record the vacuum pressure (P_v) to the nearest 1 mm Hg, and close the reaction bulb stopcocks. Open the Tedlar bag valve, and allow the system to come to atmospheric pressure. Close the bag valve, open the pump coarse adjust valve, and evacuate the system again. Repeat this fill/evacuation procedure at least twice to flush the manifold completely. Close the pump coarse adjust valve, open the Tedlar bag valve, and let the system fill to atmospheric pressure. Open the stopcocks to the reaction bulbs, and let the entire system come to atmospheric pressure. Close the bulb stopcocks, remove the bulbs, record the room temperature and barametric pressure (P_{bar}, to nearest mm Hg), and place the bulbs on the shaker table with their main axis either parallel to or perpendicular to the plane of the table top. Purge the bulb-filling system with ambient air for several minutes between samples. Shake the samples for exactly 2 hours.

Immediately after shaking, measure the absorbance (A) of each bulb sample at 425 nm if the concentration is less than or equal to 400 ppm CO or at 600 nm if the concentration

is above 400 ppm. This may be accomplished with multiple bulb sets by sequentially collecting sets and adding to the shaker at staggered intervals, followed by sequentially removing sets from the shaker for absorbance measurement after the two-hour designated intervals have elapsed.

Use a small portion of the sample to rinse a spectrophotometer cell several times before taking an aliquot for analysis. If one cell is used to analyze multiple samples, rinse the cell several times between samples with water.

Prepare and analyze standards and a reagent blank as described in Section 5.3. Use water as the reference. Reject the analysis if the blank absorbance is greater than 0.1. All conditions should be the same for analysis of samples and standards. Measure the absorbances as soon as possible after shaking is completed. Determine the CO concentration of each bag sample using the calibration curve for the appropriate concentration range as discussed in Section 5.3.

5. Calibration

5.1 *Bulb Calibration*. Weigh the empty bulb to the nearest 0.1 g. Fill the bulb to the stopcock with water, and again weigh to the nearest 0.1 g. Subtract the tare weight, and calculate the volume in liters to three significant figures using the density of water (at the measurement temperature). Record the volume on the bulb; alternatively, mark an identification number on the bulb, and record the volume in a notebook.

5.2 Rate Meter Calibration. Assemble the system as shown in Figure 10A–1 (the impingers may be removed), and attach a volume meter to the probe inlet. Set the rotameter at 300 ml/min, record the volume meter reading, start the pump, and pull gas through the system for 10 minutes. Record the final volume meter reading. Repeat the procedure and average the results to determine the volume of gas that passed through the system.

5.3 Spectrophotometer Calibration Curve. The calibration curve is established by taking at least two sets of three bulbs of known CO collected from Tedlar bags through the analysis procedure. Reject the standard set where any of the individual bulb absorbances differ from the set mean by more than 10 percent. Collect the standards as described in Section 4.2. Prepare standards to span the 0- to 400- or 400- to 1000-ppm range. If any samples span both concentration ranges, prepare a calibration curve for each range. A set of three bulbs containing colorimetric reagent but no CO should serve as a reagent blank and be taken through the analysis procedure.

Calculate the average absorbance for each set (3 bulbs) of standards using Equation 10A–1 and Table 10A–1. Construct a graph of average absorbance for each standard against its corresponding concentration in ppm. Draw a smooth curve through the points. The curve should be linear over the two concentration ranges discussed in Section 1.3.1.

6. Calculations

Carry out calculations retaining at least one extra decimal figure beyond that of the acquired data. Round off figures after final calculation.

6.1 Nomenclature.

A=Sample absorbance, uncorrected for the reagent blank.

A_r=Absorbance of the reagent blank.

A_s=Average sample absorbance per liter, units/liter.

B_w=Moisture content in the bag sample.

C=CO concentration in the stack gas, dry basis, ppm.

C_b=CO concentration of the bag sample, dry basis, ppm.

C_g=CO concentration from the calibration curve, ppm.

F=Volume fraction of CO_2 in the stack.

n=Number of reaction bulbs used per bag sample.

P_{bar}=Barometric pressure, mm Hg.

P_v=Residual pressure in the sample bulb after evacuation, mm Hg.

P_w=Vapor pressure of H_20 in the bag (from Table 10A–2), mm Hg.

V_b=Volume of the sample bulb, liters.

V_r=Volume of reagent added to the sample bulb, 0.0100 liter.

6.2 Average Sample Absorbance per Liter.

Average the three absorbance values for each bulb set. Then calculate A_s for each set of gas bulbs using Equation 10A–1. Use A_s to determine the CO concentration from the calibration curve (C_g).

$$A_s = \frac{(A - A_r)(P_{bar})}{(V_b - V_r)(P_{bar} - P_v)} \qquad \text{Eq. 10A-1}$$

NOTE: A and A_r must be at the same wavelength.

6.3 CO Concentration in the Bag.

Calculate C_b using Equations 10A–2 and 10A–3. If condensate is visible in the Tedlar bag, calculate B_w using Table 10A–2 and the temperature and barometric pressure in the analysis room. If condensate is not visible, calculate B_w using the temperature and barometric pressure recorded at the sampling site.

$$B_w = \frac{P_w}{P_{bar}} \qquad \text{Eq. 10A-2}$$

$$C_b = \frac{C_g}{(1 - B_w)} \qquad \text{Eq. 10A-3}$$

6.4 CO Concentration in the Stack.

$$C = C_b (1 - F) \qquad \text{Eq. 10A-4}$$

TABLE 10A-2. MOISTURE CORRECTION

Temperature, °C	Vapor pressure of H_2O, mm Hg	Temperature, °C	Vapor pressure of H_2O, mm Hg
4	6.1	18	15.5
6	7.0	20	17.5
8	8.0	22	19.8
10	9.2	24	22.4
12	10.5	26	25.2
14	12.0	28	28.3
16	13.6	30	31.8

7. BIBLIOGRAPHY

1. Butler, F.E., J.E. Knoll, and M.R. Midgett. Development and Evaluation of Methods for Determining Carbon Monoxide Emissions. Quality Assurance Division, Environmental Monitoring Systems Laboratory, U.S. Environmental Protection Agency, Research Triangle Park, NC 27711. June 1985. 33 p.

2. Ferguson, B.B., R.E. Lester, and W.J. Mitchell. Field Evaluation of Carbon Monoxide and Hydrogen Sulfide Continuous Emission Monitors at an Oil Refinery. U.S. Environmental Protection Agency. Research Triangle Park, NC. Publication No. EPA–600/4–82–054. August 1982. 100 p.

3. Lambert, J.L., and R.E. Weins. Induced Colorimetric Method for Carbon Monoxide. Analytical Chemistry. *46*(7):929–930. June 1974.

4. Levaggi, D.A., and M. Feldstein. The Colorimetric Determination of Low Concentrations of Carbon Monoxide. Industrial Hygiene Journal. *25*:64–66. January-February 1964.

5. Repp, M. Evaluation of Continuous Monitors for Carbon Monoxide in Stationary Sources. U.S. Environmental Protection Agency. Research Triangle Park, NC. Publication No. EPA–600/2–77–063. March 1977. 155 p.

6. Smith, F., D.E. Wagoner, and R.P. Donovan. Guidelines for Development of a Quality Assurance Program: Volume VIII—Determination of CO Emissions from Stationary Sources by NDIR Spectrometry. U.S. Environmental Protection Agency. Research Triangle Park, NC. Publication No. EPA–650/4–74–005–h. February 1975. 96 p.

METHOD 10B—DETERMINATION OF CARBON MONOXIDE EMISSIONS FROM STATIONARY SOURCES

1. Applicability and Principle

1.1 Applicability. This method applies to the measurement of carbon monoxide (CO) emissions at petroleum refineries and from other sources when specified in an applicable subpart of the regulations.

1.2 Principle. An integrated gas sample is extracted from the sampling point and analyzed for CO. The sample is passed through a conditioning system to remove interferences and collected in a Tedlar bag. The CO is separated from the sample by gas chromatography (GC) and catalytically reduced to methane (CH_4) prior to analysis by flame ionization detection FID. The analytical portion of this method is identical to applicable sections in Method 25 detailing CO measurement. The oxidation catalyst required in Method 25 is not needed for sample analysis. Complete Method 25 analytical systems are acceptable alternatives when calibrated for CO and operated by the Method 25 analytical procedures.

NOTE: Mention of trade names or commercial products in this method does not constitute the endorsement or recommendation for use by the Environmental Protection Agency.

1.3 Interferences. Carbon dioxide (CO_2) and organics potentially can interfere with the analysis. Carbon dioxide is primarily removed from the sample by the alkaline permanganate conditioning system; any residual CO_2 and organics are separated from the CO by GC.

2. Apparatus

2.1 Sampling. Same as in Method 10A, section 2.1.

2.2 Analysis.

2.2.1 Gas Chromatographic (GC) Analyzer. A semicontinuous GC/FID analyzer capable of quantifying CO in the sample and containing at least the following major components.

2.2.1.1 Separation Column. A column that separates CO from CO_2 and organic compounds that may be present. A ⅛-in. OD stainless-steel column packed with 5.5 ft of 60/80 mesh Carbosieve S–II (available from Supelco) has been used successfully for this purpose. The column listed in Addendum 1 of Method 25 is also acceptable.

2.2.1.2 Reduction Catalyst. Same as in Method 25, section 2.3.2.

2.2.1.3 Sample Injection System. Same as in Method 25, section 2.3.4, equipped to accept a sample line from the Tedlar bag.

2.2.1.4 Flame Ionization Detector. Linearity meeting the specifications in section 2.3.5.1 of Method 25 where the linearity check is carried out using standard gases containing 20–, 200–, and 1,000–ppm CO. The minimal instrument range shall span 10 to 1,000 ppm CO.

2.2.1.5 Data Recording System. Same as in Method 25, section 2.3.6.

3. *Reagents*

3.1 Sampling. Same as in Method 10A, section 3.1.

3.2 Analysis.

3.2.1 Carrier, Fuel, and Combustion Gases. Same as in Method 25, sections 3.2.1, 3.2.2, and 3.2.3.

3.2.2 Linearity and Calibration Gases. Three standard gases with nominal CO concentrations of 20–, 200–, and 1,000–ppm CO in nitrogen.

3.2.3 Reduction Catalyst Efficiency Check Calibration Gas. Standard CH_4 gas with a concentration of 1,000 ppm in air.

4. Procedure

4.1 Sample Bag Leak-checks, Sampling, and CO_2 Measurement. Same as in Method 10A, sections 4.1, 4.2, and 4.3.

4.2 Preparation for Analysis. Before putting the GC analyzer into routine operation, conduct the calibration procedures listed in section 5. Establish an appropriate carrier flow rate and detector temperature for the specific instrument used.

4.3 Sample Analysis. Purge the sample loop with sample, and then inject the sample. Analyze each sample in triplicate, and calculate the average sample area (A). Determine the bag CO concentration according to section 6.2.

5. Calibration

5.1 Carrier Gas Blank Check. Analyze each new tank of carrier gas with the GC analyzer according to section 4.3 to check for contamination. The corresponding concentration must be less than 5 ppm for the tank to be acceptable for use.

5.2 Reduction Catalyst Efficiency Check. Prior to initial use, the reduction catalyst shall be tested for reduction efficiency. With the heated reduction catalyst bypassed, make triplicate injections of the 1,000-ppm CH_4 gas (section 3.2.3) to calibrate the analyzer. Repeat the procedure using 1,000-ppm CO (section 3.2.2) with the catalyst in operation. The reduction catalyst operation is acceptable if the CO response is within 5 percent of the certified gas value.

5.3 Analyzer Linearity Check and Calibration. Perform this test before the system is first placed into operation. With the reduction catalyst in operation, conduct a linearity check of the analyzer using the standards specified in section 3.2.2. Make triplicate injections of each calibration gas, and then calculate the average response factor (area/ppm) for each gas, as well as the overall mean of the response factor values. The instrument linearity is acceptable if the average response factor of each calibration gas is within 2.5 percent of the overall mean value and if the relative standard deviation (calculated in section 6.9 of Method 25) for each set of triplicate injections is less than 2 percent. Record the overall mean of the response factor values as the calibration response factor (R).

6. Calculations

Carry out calculations retaining at least one extra decimal figure beyond that of the acquired data. Round off results only after the final calculation.

6.1 Nomenclature.

A=Average sample area.

B_w=Moisture content in the bag sample, fraction.

C=CO concentration in the stack gas, dry basis, ppm.

C_b=CO concentration in the bag sample, dry basis, ppm.

F=Volume fraction of CO_2 in the stack, fraction.

P_{bar}=Barometric pressure, mm Hg.

P_w=Vapor pressure H_2O in the bag (from Table 10–2, Method 10A), mm Hg.

R=Mean calibration response factor, area/ppm.

6.2 CO Concentration in the Bag. Calculate C_b using Equations 10B–1 and 10B–2. If condensate is visible in the Tedlar bag, calculate B_w using Table 10A–1 of Method 10A and the temperature and barometric pressure in the analysis room. If condensate is not visible, calculate B_w using the temperature and barometric pressure at the sampling site.

$$B_w = \frac{P_w}{P_{bar}} \qquad \text{Eq. 10B-1}$$

$$C_b = \frac{A}{R(1 - B_w)} \qquad \text{Eq. 10B-2}$$

6.3 CO Concentration in the Stack.

$C=C_b(1-F)$

Eq. 10B–3

7. Bibliography

1. Butler, F.E, J.E. Knoll, and M.R. Midgett. Development and Evaluation of Methods for Determining Carbon Monoxide Emissions. Quality Assurance Division, Environmental Monitoring Systems Laboratory, U.S. Environmental Protection Agency, Research Triangle Park, NC 27711. June 1985. 33p.

2. Salo, A.E., S. Witz, and R.D. MacPhee. Determination of Solvent Vapor Concentrations by Total Combustion Analysis: A Comparison of Infrared with Flame Ionization Detectors. Paper No. 75–33.2. (Presented at the 68th Annual Meeting of the Air Pollution Control Association. Boston, MA. June 15, 1975.) 14 p.

3. Salo, A.E., W.L. Oaks, and R.D. MacPhee. Measuring the Organic Carbon Content of Source Emissions for Air Pollution Control. Paper No. 74–190. (Presented at the 67th Annual Meeting of the Air Pollution Control Association. Denver, CO. June 9, 1974.) 25 p.

METHOD 11—DETERMINATION OF HYDROGEN SULFIDE CONTENT OF FUEL GAS STREAMS IN PETROLEUM REFINERIES

1. *Principle and Applicability*

1.1 Principle. Hydrogen sulfide (H_2S) is collected from a source in a series of midget impingers and absorbed in pH 3.0 cadmium sulfate ($CdSO_4$) solution to form cadmium sulfide (CdS). The latter compound is then measured iodometrically. An impinger containing hydrogen peroxide is included to remove SO_2 as an interfering species. This method is a revision of the H_2S method originally published in the FEDERAL REGISTER, Volume 39, No. 47, dated Friday, March 8, 1974.

1.2 Applicability. This method is applicable for the determination of the hydrogen sulfide content of fuel gas streams at petroleum refineries.

2. *Range and Sensitivity*

The lower limit of detection is approximately 8 mg/m³ (6 ppm). The maximum of the range is 740 mg/m³ (520 ppm).

3. *Interferences*

Any compound that reduces iodine or oxidizes iodide ion will interfere in this procedure, provided it is collected in the cadmium sulfate impingers. Sulfur dioxide in concentrations of up to 2,600 mg/m³ is eliminated by the hydrogen peroxide solution. Thiols precipitate with hydrogen sulfide. In the absence of H_2S, only co-traces of thiols are collected. When methane- and ethanethiols at a total level of 300 mg/m³ are present in addition to H_2S, the results vary from 2 percent low at an H_2S concentration of 400 mg/m³ to 14 percent high at an H_2S concentration of 100 mg/m³. Carbon oxysulfide at a concentration of 20 percent does not interfere. Certain carbonyl-containing compounds react with iodine and produce recurring end points. However, acetaldehyde and acetone at concentrations of 1 and 3 percent, respectively, do not interfere.

Entrained hydrogen peroxide produces a negative interference equivalent to 100 percent of that of an equimolar quantity of hydrogen sulfide. Avoid the ejection of hydrogen peroxide into the cadmium sulfate impingers.

4. *Precision and Accuracy*

Collaborative testing has shown the within-laboratory coefficient of variation to be 2.2 percent and the overall coefficient of variation to be 5 percent. The method bias was shown to be −4.8 percent when only H_2S was present. In the presence of the interferences cited in section 3, the bias was positive at low H_2S concentration and negative at higher concentrations. At 230 mg H_2S/m³, the level of the compliance standard, the bias

was +2.7 percent. Thiols had no effect on the precision.

5. *Apparatus*

5.1 Sampling Apparatus.

5.1.1 Sampling Line. Six to 7 mm (¼ in.) Teflon[1] tubing to connect the sampling train to the sampling valve.

5.1.2 Impingers. Five midget impingers, each with 30 ml capacity. The internal diameter of the impinger tip must be 1 mm ±0.05 mm. The impinger tip must be positioned 4 to 6 mm from the bottom of the impinger.

5.1.3 Tubing. Glass or Teflon connecting tubing for the impingers.

5.1.4 Ice Bath Container. To maintain absorbing solution at a low temperature.

5.1.5 Drying Tube. Tube packed with 6- to 16-mesh indicating-type silica gel, or equivalent, to dry the gas sample and protect the meter and pump. If the silica gel has been used previously, dry at 175 °C (350 °F) for 2 hours. New silica gel may be used as received. Alternatively, other types of desiccants (equivalent or better) may be used, subject to approval of the Administrator.

NOTE: Do not use more than 30 g of silica gel. Silica gel absorbs gases such as propane from the fuel gas stream, and use of excessive amounts of silica gel could result in errors in the determination of sample volume.

5.1.6 Sampling Valve. Needle valve or equivalent to adjust gas flow rate. Stainless steel or other corrosion-resistant material.

5.1.7 Volume Meter. Dry gas meter, sufficiently accurate to measure the sample volume within 2 percent, calibrated at the selected flow rate (~1.0 liter/min) and conditions actually encountered during sampling. The meter shall be equipped with a temperature gauge (dial thermometer or equivalent) capable of measuring temperature to within 3 °C (5.4 °F). The gas meter should have a petcock, or equivalent, on the outlet connector which can be closed during the leak check. Gas volume for one revolution of the meter must not be more than 10 liters.

5.1.8 Flow Meter. Rotameter or equivalent, to measure flow rates in the range from 0.5 to 2 liters/min (1 to 4 cfh).

5.1.9 Graduated Cylinder, 25 ml size.

5.1.10 Barometer. Mercury, aneroid, or other barometer capable of measuring atmospheric pressure to within 2.5 mm Hg (0.1 in. Hg). In many cases, the barometric reading may be obtained from a nearby National Weather Service station, in which case, the station value (which is the absolute barometric pressure) shall be requested and an adjustment for elevation differences between the weather station and the sampling point shall be applied at a rate of minus 2.5 mm Hg (0.1 in. Hg) per 30 m (100 ft) elevation increase or vice-versa for elevation decrease.

5.1.11 U-tube Manometer. 0–30 cm water column. For leak check procedure.

5.1.12 Rubber Squeeze Bulb. To pressurize train for leak check.

5.1.13 Tee, Pinchclamp, and Connecting Tubing. For leak check.

5.1.14 Pump. Diaphragm pump, or equivalent. Insert a small surge tank between the pump and rate meter to eliminate the pulsation effect of the diaphragm pump on the rotameter. The pump is used for the air purge at the end of the sample run; the pump is not ordinarily used during sampling, because fuel gas streams are usually sufficiently pressurized to force sample gas through the train at the required flow rate. The pump need not be leak-free unless it is used for sampling.

5.1.15 Needle Valve or Critical Orifice. To set air purge flow to 1 liter/min.

5.1.16 Tube Packed With Active Carbon. To filter air during purge.

5.1.17 Volumetric Flask. One 1,000 ml.

5.1.18 Volumetric Pipette. One 15 ml.

5.1.19 Pressure-Reduction Regulator. Depending on the sampling stream pressure, a pressure-reduction regulator may be needed to reduce the pressure of the gas stream entering the Teflon sample line to a safe level.

5.1.20 Cold Trap. If condensed water or amine is present in the sample stream, a corrosion-resistant cold trap shall be used immediately after the sample tap. The trap shall not be operated below 0 °C (32 °F) to avoid condensation of C_3 or C_4 hydrocarbons.

5.2 Sample Recovery.

5.2.1 Sample Container. Iodine flask, glass-stoppered: 500 ml size.

5.2.2 Pipette. 50 ml volumetric type.

5.2.3 Graduated Cylinders. One each 25 and 250 ml.

5.2.4 Flasks. 125 ml, Erlenmeyer.

5.2.5 Wash Bottle.

5.2.6 Volumetric Flasks. Three 1,000 ml.

5.3 Analysis.

5.3.1 Flask. 500 ml glass-stoppered iodine flask.

5.3.2 Burette. 50 ml.

5.3.3 Flask. 125 ml, Erlenmeyer.

5.3.4 Pipettes, Volumetric. One 25 ml; two each 50 and 100 ml.

5.3.5 Volumetric Flasks. One 1,000 ml; two 500 ml.

5.3.6 Graduated Cylinders. One each 10 and 100 ml.

6. *Reagents*

Unless otherwise indicated, it is intended that all reagents conform to the specifications established by the Committee on Analytical Reagents of the American Chemical Society, where such specifications are available. Otherwise, use best available grade.

6.1 Sampling.

[1] Mention of trade names or specific products does not constitute endorsement by the Environmental Protection Agency.

6.1.1 Cadmium Sulfate Absorbing Solution. Dissolve 41 g of $3CdSO_4 \bullet 8H_2O$ and 15 ml of 0.1 M sulfuric acid in a 1-liter volumetric flask that contains approximately ¾ liter of deionized distilled water. Dilute to volume with deionized water. Mix thoroughly. pH should be 3±0.1. Add 10 drops of Dow-Corning Antifoam B. Shake well before use. If Antifoam B is not used, the alternative acidified iodine extraction procedure (Section 7.2.2) must be used.

6.1.2 Hydrogen Peroxide, 3 Percent. Dilute 30 percent hydrogen peroxide to 3 percent as needed. Prepare fresh daily.

6.1.3 Water. Deionized, distilled to conform to ASTM specifications D1193–72, Type 3. At the option of the analyst, the $KMnO_4$ test for oxidizable organic matter may be omitted when high concentrations of organic matter are not expected to be present.

6.2 Sample Recovery.

6.2.1 Hydrochloric Acid Solution (HCl), 3M. Add 240 ml of concentrated HCl (specific gravity 1.19) to 500 ml of deionized, distilled water in a 1-liter volumetric flask. Dilute to 1 liter with deionized water. Mix thoroughly.

6.2.2 Iodine Solution 0.1 N. Dissolve 24 g of potassium iodide (KI) in 30 ml of deionized, distilled water. Add 12.7 g of resublimed iodine (I_2) to the potassium iodide solution. Shake the mixture until the iodine is completely dissolved. If possible, let the solution stand overnight in the dark. Slowly dilute the solution to 1 liter with deionized, distilled water, with swirling. Filter the solution if it is cloudy. Store solution in a brown-glass reagent bottle.

6.2.3 Standard Iodine Solution, 0.01 N. Pipette 100.0 ml of the 0.1 N iodine solution into a 1-liter volumetric flask and dilute to volume with deionized, distilled water. Standardize daily as in Section 8.1.1. This solution must be protected from light. Reagent bottles and flasks must be kept tightly stoppered.

6.3 Analysis.

6.3.1 Sodium Thiosulfate Solution, Standard 0.1 N. Dissolve 24.8 g of sodium thiosulfate pentahydrate ($Na_2S_2O_3 \bullet 5H_2O$) or 15.8 g of anhydrous sodium thiosulfate ($Na_2S_2O_3$) in 1 liter of deionized, distilled water and add 0.01 g of anhydrous sodium carbonate (Na_2CO_3) and 0.4 ml of chloroform ($CHCl_3$) to stabilize. Mix thoroughly by shaking or by aerating with nitrogen for approximately 15 minutes and store in a glass-stoppered, reagent bottle. Standardize as in Section 8.1.2.

6.3.2 Sodium Thiosulfate Solution, Standard 0.01 N. Pipette 50.0 ml of the standard 0.1 N thiosulfate solution into a volumetric flask and dilute to 500 ml with distilled water.

NOTE: A 0.01 N phenylarsine oxide solution may be prepared instead of 0.01 N thiosulfate (see Section 6.3.3).

6.3.3 Phenylarsine Oxide Solution, Standard 0.01 N. Dissolve 1.80 g of phenylarsine oxide (C_6H_5AsO) in 150 ml of 0.3 N sodium hydroxide. After settling, decant 140 ml of this solution into 800 ml of distilled water. Bring the solution to pH 6–7 with 6N hydrochloric acid and dilute to 1 liter. Standardize as in Section 8.1.3.

6.3.4 Starch Indicator Solution. Suspend 10 g of soluble starch in 100 ml of deionized, distilled water and add 15 g of potassium hydroxide (KOH) pellets. Stir until dissolved, dilute with 900 ml of deionized distilled water and let stand for 1 hour. Neutralize the alkali with concentrated hydrochloric acid, using an indicator paper similar to Alkacid test ribbon, then add 2 ml of glacial acetic acid as a preservative.

NOTE: Test starch indicator solution for decomposition by titrating, with 0.01 N iodine solution, 4 ml of starch solution in 200 ml of distilled water that contains 1 g potassium iodide. If more than 4 drops of the 0.01 N iodine solution are required to obtain the blue color, a fresh solution must be prepared.

7. *Procedure*

7.1 Sampling.

7.1.1 Assemble the sampling train as shown in Figure 11–1, connecting the five midget impingers in series. Place 15 ml of 3 percent hydrogen peroxide solution in the first impinger. Leave the second impinger empty. Place 15 ml of the cadmium sulfate absorbing solution in the third, fourth, and fifth impingers. Place the impinger assembly in an ice bath container and place crushed ice around the impingers. Add more ice during the run, if needed.

7.1.2 Connect the rubber bulb and manometer to first impinger, as shown in Figure 11–1. Close the petcock on the dry gas meter outlet. Pressurize the train to 25-cm water pressure with the bulb and close off tubing connected to rubber bulb. The train must hold a 25-cm water pressure with not more than a 1-cm drop in pressure in a 1-minute interval. Stopcock grease is acceptable for sealing ground glass joints.

NOTE: This leak check procedure is optional at the beginning of the sample run, but is mandatory at the conclusion. Note also that if the pump is used for sampling, it is recommended (but not required) that the pump be leak-checked separately, using a method consistent with the leak-check procedure for diaphragm pumps outlined in Section 4.1.2 of Method 6, 40 CFR part 60, appendix A.

7.1.3 Purge the connecting line between the sampling valve and first impinger, by disconnecting the line from the first impinger, opening the sampling valve, and allowing process gas to flow through the line for a minute or two. Then, close the sampling valve and reconnect the line to the impinger train. Open the petcock on the dry

gas meter outlet. Record the initial dry gas meter reading.

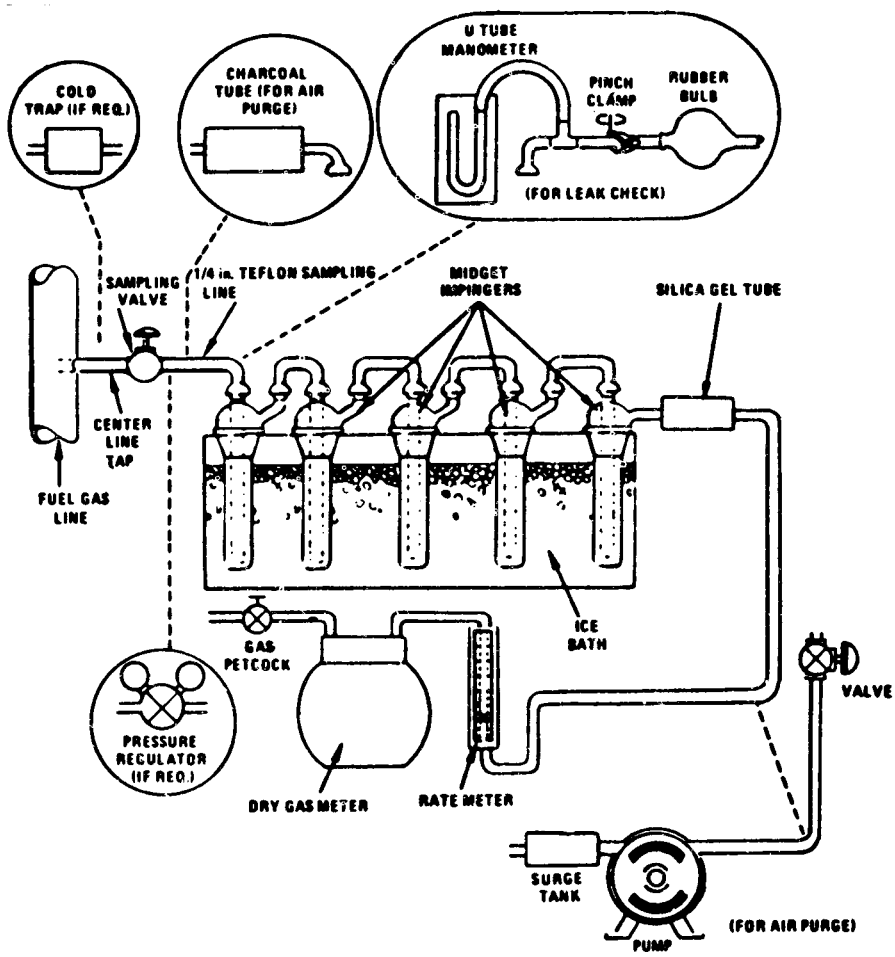

Figure 11-1. H_2S sampling train.

7.1.4 Open the sampling valve and then adjust the valve to obtain a rate of approximately 1 liter/min. Maintain a constant (±10 percent) flow rate during the test. Record the meter temperature.

7.1.5 Sample for at least 10 min. At the end of the sampling time, close the sampling valve and record the final volume and temperature readings. Conduct a leak check as described in Section 7.1.2 above.

7.1.6 Disconnect the impinger train from the sampling line. Connect the charcoal tube and the pump, as shown in Figure 11–1. Purge the train (at a rate of 1 liter/min) with clean ambient air for 15 minutes to ensure that all H_2S is removed from the hydrogen peroxide. For sample recovery, cap the open ends and remove the impinger train to a clean area that is away from sources of heat. The area should be well lighted, but not exposed to direct sunlight.

7.2 Sample Recovery.

7.2.1 Discard the contents of the hydrogen peroxide impinger. Carefully rinse the contents of the third, fourth, and fifth impingers into a 500 ml iodine flask.

NOTE: The impingers normally have only a thin film of cadmium sulfide remaining after a water rinse. If Antifoam B was not used or if significant quantities of yellow cadmium sulfide remain in the impingers, the alternative recovery procedure described below must be used.

7.2.2 Pipette exactly 50 ml of 0.01 N iodine solution into a 125 ml Erlenmeyer flask. Add 10 ml of 3 M HCl to the solution. Quantitatively rinse the acidified iodine into the iodine flask. Stopper the flask immediately and shake briefly.

7.2.2 (Alternative). Extract the remaining cadmium sulfide from the third, fourth, and fifth impingers using the acidified iodine solution. Immediately after pouring the acidified iodine into an impinger, stopper it and shake for a few moments, then transfer the liquid to the iodine flask. Do not transfer any rinse portion from one impinger to another; transfer it directly to the iodine flask. Once the acidified iodine solution has been poured into any glassware containing cadmium sulfide, the container must be tightly stoppered at all times except when adding more solution, and this must be done as quickly and carefully as possible. After adding any acidified iodine solution to the iodine flask, allow a few minutes for absorption of the H_2S before adding any further rinses. Repeat the iodine extraction until all cadmium sulfide is removed from the impingers. Extract that part of the connecting glassware that contains visible cadmium sulfide.

Quantitatively rinse all of the iodine from the impingers, connectors, and the beaker into the iodine flask using deionized, distilled water. Stopper the flask and shake briefly.

7.2.3 Allow the iodine flask to stand about 30 minutes in the dark for absorption of the H_2S into the iodine, then complete the titration analysis as in Section 7.3.

NOTE: Caution! Iodine evaporates from acidified iodine solutions. Samples to which acidified iodine have been added may not be stored, but must be analyzed in the time schedule stated in Section 7.2.3.

7.2.4 Prepare a blank by adding 45 ml of cadmium sulfate absorbing solution to an iodine flask. Pipette exactly 50 ml of 0.01 N iodine solution into a 125-ml Erlenmeyer flask. Add 10 ml of 3 M HCl. Follow the same impinger extracting and quantitative rinsing procedure carried out in sample analysis. Stopper the flask, shake briefly, let stand 30 minutes in the dark, and titrate with the samples.

NOTE: The blank must be handled by exactly the same procedure as that used for the samples.

7.3 Analysis.

NOTE: Titration analyses should be conducted at the sample-cleanup area in order to prevent loss of iodine from the sample. Titration should never be made in direct sunlight.

7.3.1 Using 0.01 N sodium thiosulfate solution (or 0.01 N phenylarsine oxide, if applicable), rapidly titrate each sample in an iodine flask using gentle mixing, until solution is light yellow. Add 4 ml of starch indicator solution and continue titrating slowly until the blue color just disappears. Record V_{TT}, the volume of sodium thiosulfate solution used, or V_{AT}, the volume of phenylarsine oxide solution used (ml).

7.3.2 Titrate the blanks in the same manner as the samples. Run blanks each day until replicate values agree within 0.05 ml. Average the replicate titration values which agree within 0.05 ml.

8. *Calibration and Standards*

8.1 Standardizations.

8.1.1 Standardize the 0.01 N iodine solution daily as follows: Pipette 25 ml of the iodine solution into a 125 ml Erlenmeyer flask. Add 2 ml of 3 M HCl. Titrate rapidly with standard 0.01 N thiosulfate solution or with 0.01 N phenylarsine oxide until the solution is light yellow, using gentle mixing. Add four drops of starch indicator solution and continue titrating slowly until the blue color just disappears. Record V_T, the volume of thiosulfate solution used, or V_{AS}, the volume of phenylarsine oxide solution used (ml). Repeat until replicate values agree within 0.05 ml. Average the replicate titration values which agree within 0.05 ml and calculate the exact normality of the iodine solution using Equation 11–3. Repeat the standardization daily.

8.1.2 Standardize the 0.1 N thiosulfate solution as follows: Oven-dry potassium dichromate ($K_2Cr_2O_7$) at 180 to 200 °C (360 to 390 °F). Weigh to the nearest milligram, 2 g of potassium dichromate. Transfer the dichromate to a 500 ml volumetric flask, dissolve in deionized, distilled water and dilute to exactly 500 ml. In a 500 ml iodine flask, dissolve approximately 3 g of potassium iodide (KI) in 45 ml of deionized, distilled water, then add 10 ml of 3 M hydrochloric acid solution. Pipette 50 ml of the dichromate solution into this mixture. Gently swirl the solution once and allow it to stand in the dark for 5 minutes. Dilute the solution with 100 to 200 ml of deionized distilled water, washing down the sides of the flask with part of the water. Titrate with 0.1 N thiosulfate until the solution is light yellow. Add 4 ml of starch indicator and continue titrating slowly to a green end point. Record V_S, the volume of thiosulfate solution used (ml). Repeat until replicate analyses agree within 0.05 ml. Calculate the normality using Equation 11–1. Repeat the standardization each week, or

after each test series, whichever time is shorter.

8.1.3 Standardize the 0.01 N Phenylarsine oxide (if applicable) as follows: oven dry potassium dichromate ($K_2Cr_2O_7$) at 180 to 200 °C (360 to 390 °F). Weigh to the nearest milligram, 2 g of the $K_2Cr_2O_7$; transfer the dichromate to a 500 ml volumetric flask, dissolve in deionized, distilled water, and dilute to exactly 500 ml. In a 500 ml iodine flask, dissolve approximately 0.3 g of potassium iodide (KI) in 45 ml of deionized, distilled water; add 10 ml of 3M hydrochloric acid. Pipette 5 ml of the $K_2Cr_2O_7$ solution into the iodine flask. Gently swirl the contents of the flask once and allow to stand in the dark for 5 minutes. Dilute the solution with 100 to 200 ml of deionized, distilled water, washing down the sides of the flask with part of the water. Titrate with 0.01 N phenylarsine oxide until the solution is light yellow. Add 4 ml of starch indicator and continue titrating slowly to a green end point. Record V_A, the volume of phenylarsine oxide used (ml). Repeat until replicate analyses agree within 0.05 ml. Calculate the normality using Equation 11–2. Repeat the standardization each week or after each test series, whichever time is shorter.

8.2 Sampling Train Calibration. Calibrate the sampling train components as follows:

8.2.1 Dry Gas Meter.

8.2.1.1 Initial Calibration. The dry gas meter shall be calibrated before its initial use in the field. Proceed as follows: First, assemble the following components in series: Drying tube, needle valve, pump, rotameter, and dry gas meter. Then, leak-check the system as follows: Place a vacuum gauge (at least 760 mm Hg) at the inlet to the drying tube and pull a vacuum of 250 mm (10 in.) Hg; plug or pinch off the outlet of the flow meter, and then turn off the pump. The vacuum shall remain stable for at least 30 seconds. Carefully release the vacuum gauge before releasing the flow meter end.

Next, calibrate the dry gas meter (at the sampling flow rate specified by the method) as follows: Connect an appropriately sized wet test meter (e.g., 1 liter per revolution) to the inlet of the drying tube. Make three independent calibration runs, using at least five revolutions of the dry gas meter per run. Calculate the calibration factor, *Y* (wet test meter calibration volume divided by the dry gas meter volume, both volumes adjusted to the same reference temperature and pressure), for each run, and average the results. If any *Y* value deviates by more than 2 percent from the average, the dry gas meter is unacceptable for use. Otherwise, use the average as the calibration factor for subsequent test runs.

8.2.1.2 Post-test Calibration Check. After each field test series, conduct a calibration check as in Section 8.2.1.1. above, except for the following variations: (a) The leak check is not to be conducted, (b) three or more revolutions of the dry gas meter may be used, and (c) only two independent runs need be made. If the calibration factor does not deviate by more than 5 percent from the initial calibration factor (determined in Section 8.2.1.1.), then the dry gas meter volumes obtained during the test series are acceptable. If the calibration factor deviates by more than 5 percent, recalibrate the dry gas meter as in Section 8.2.1.1, and for the calculations, use the calibration factor (initial or recalibration) that yields the lower gas volume for each test run.

8.2.2 Thermometers. Calibrate against mercury-in-glass thermometers.

8.2.3 Rotameter. The rotameter need not be calibrated, but should be cleaned and maintained according to the manufacturer's instruction.

8.2.4 Barometer. Calibrate against a mercury barometer.

9. *Calculations*

Carry out calculations retaining at least one extra decimal figure beyond that of the acquired data. Round off results only after the final calculation.

9.1 Normality of the Standard (~0.1 N) Thiosulfate Solution.

$$N_S=2.039W/V_S \qquad \text{Eq. 11–1}$$

where:

W=Weight of $K_2Cr_2O_7$ used, g.
V_S=Volume of $Na_2S_2O_3$ solution used, ml.
N_S=Normality of standard thiosulfate solution, g-eq/liter.
2.039=Conversion factor

(6 eq. I_2/MOLE $K_2CR_2O_7$) (1,000 ML/LITER)/ (294.2 G $K_2CR_2O_7$/MOLE) (10 ALIQUOT FACTOR)

9.2 Normality of Standard Phenylarsine Oxide Solution (if applicable).

$$N_A=0.2039\ W/V_A \qquad \text{Eq. 11–2}$$

where:

W=Weight of $K_2Cr_2O_7$ used, g.
V_A=Volume of $C_6H_5A_sO$ used, ml.
N_A=Normality of standard phenylarsine oxide solution, g-eq/liter.
0.2039=Conversion factor

(6 eq. I_2/MOLE $K_2CR_2O_7$) (1,000 ML/LITER)/(249.2 G $K_2CR_2O_7$/MOLE) (100 ALIQUOT FACTOR)

9.3 Normality of Standard Iodine Solution.

$$N_I=N_TV_T/V_I \qquad 11–3$$

where:

N_I=Normality of standard iodine solution, g-eq/liter.
V_I=Volume of standard iodine solution used, ml.

N_T=Normality of standard (~0.01 N) thiosulfate solution; assumed to be 0.1 N_S, g-eq/liter.

V_T=Volume of thiosulfate solution used, ml.

NOTE: If phenylarsine oxide is used instead of thiosulfate, replace N_T and V_T in Equation 11–3 with N_A and V_{AS}, respectively (see Sections 8.1.1 and 8.1.3).

9.4 Dry Gas Volume. Correct the sample volume measured by the dry gas meter to standard conditions (20 °C and 760 mm Hg.)

$$V_{m(std)}=V_m\ Y\ [(T_{std}/T_m)\ (P_{bar}/P_{std})]$$

Eq. 11–4

Where:

$V_{m(std)}$=Volume at standard conditions of gas sample through the dry gas meter, standard liters.

V_m=Volume of gas sample through the dry gas meter (meter conditions), liters.

T_{std}=Absolute temperature at standard conditions, 293°K.

T_m=Average dry gas meter temperature, °K.

P_{bar}=Barometric pressure at the sampling site, mm Hg.

P_{std}=Absolute pressure at standard conditions, 760 mm Hg.

Y=Dry gas meter calibration factor.

9.5 Concentration of H_2S. Calculate the concentration of H_2S in the gas stream at standard conditions using the following equation:

$$C_{H2S}=K[(V_{IT}N_I-V_{TT}N_T)\ \text{sample}—(V_{IT}\ N_I-V_{TT}\ N_T)]/V_{m(std)}$$

Eq. 11–5

Where (metric units):

C_{H2S}=Concentration of H_2S at standard conditions, mg/dscm.

K=Conversion factor 17.04×10^3

(34.07 g/mole H_2S) (1,000 LITERS/M^3) (1,000 MG/G)/(1,000 ML/LITER) ($2H_2S$ EQ/MOLE)

V_{IT}=Volume of standard iodine solution=50.0 ml.

N_I=Normality of standard iodine solution, g-eq/liter.

V_{TT}=Volume of standard (~0.01 N) sodium thiosulfate solution, ml.

N_T=Normality of standard sodium thiosulfate solution, g-eq/liter.

$V_{m(std)}$=Dry gas volume at standard conditions, liters.

NOTE: If phenylarsine oxide is used instead of thiosulfate, replace N_T and V_{TT} in Equation 11–5 with N_A and V_{AT}, respectively (see Sections 7.3.1 and 8.1.3).

10. *Stability*

The absorbing solution is stable for at least 1 month. Sample recovery and analysis should begin within 1 hour of sampling to minimize oxidation of the acidified cadmium sulfide. Once iodine has been added to the sample, the remainder of the analysis procedure must be completed according to Sections 7.2.2 through 7.3.2.

11. *Bibliography*

1. Determination of Hydrogen Sulfide, Ammoniacal Cadmium Chloride Method. API Method 772–54. In: Manual on Disposal of Refinery Wastes, Vol. V: Sampling and Analysis of Waste Gases and Particulate Matter, American Petroleum Institute, Washington, DC. 1954.

2. Tentative Method of Determination of Hydrogen Sulfide and Mercaptan Sulfur in Natural Gas, Natural Gas Processors Association, Tulsa, OK. NGPA Publication No. 2265–65. 1965.

3. Knoll, J. E., and M. R. Midgett. Determination of Hydrogen Sulfide in Refinery Fuel Gases, Environmental Monitoring Series, Office of Research and Development, USEPA, Research Triangle Park, NC 27711, EPA 600/4–77–007.

4. Scheil, G. W., and M. C. Sharp. Standardization of Method 11 at a Petroleum Refinery, Midwest Research Institute Draft Report for USEPA, Office of Research and Development, Research Triangle Park, NC 27711, EPA Contract No. 68–02–1098. August 1976, EPA 600/4–77–088a (Volume 1) and EPA 600/4–77–088b (Volume 2).

METHOD 12—DETERMINATION OF INORGANIC LEAD EMISSIONS FROM STATIONARY SOURCES

1. *Principle and Applicability*

1.1 Applicability. This method applies to the determination of inorganic lead (Pb) emissions from specified stationary sources only.

1.2 Principle. Particulate and gaseous Pb emissions are withdrawn isokinetically from the source and collected on a filter and in dilute nitric acid. The collected samples are digested in acid solution and analyzed by atomic absorption spectrometry using an air acetylene flame.

2. *Range, Sensitivity, Precision, and Interferences*

2.1 Range. For a minimum analytical accuracy of ±10 percent, the lower limit of the range is 100 µg. The upper limit can be considerably extended by dilution.

2.2 Analytical Sensitivity. Typical sensitivities for a 1-percent change in absorption (0.0044 absorbance units) are 0.2 and 0.5 µg Pb/ml for the 217.0 and 283.3 nm lines, respectively.

2.3 Precision. The within-laboratory precision, as measured by the coefficient of variation ranges from 0.2 to 9.5 percent relative to a run-mean concentration. These values were based on tests conducted at a gray iron foundry, a lead storage battery manufacturing plant, a secondary lead smelter, and a

lead recovery furnace of an alkyl lead manufacturing plant. The concentrations encountered during these tests ranged from 0.61 to 123.3 mg Pb/m^3.

2.4 Interferences. Sample matrix effects may interfere with the analysis for Pb by flame atomic absorption. If this interference is suspected, the analyst may confirm the presence of these matrix effects and frequently eliminate the interference by using the Method of Standard Additions.

High concentrations of copper may interfere with the analysis of Pb at 217.0 nm. This interference can be avoided by analyzing the samples at 283.3 nm.

3. *Apparatus*

3.1 Sampling Train. A schematic of the sampling train is shown in Figure 12–1; it is similar to the Method 5 train. The sampling train consists of the following components:

3.1.1 Probe Nozzle, Probe Liner, Pitot Tube, Differential Pressure Gauge, Filter Holder, Filter Heating System, Metering System, Barometer, and Gas Density Determination Equipment. Same as Method 5, Sections 2.1.1 to 2.1.6 and 2.1.8 to 2.1.10, respectively.

3.1.2 Impingers. Four impingers connected in series with leak-free ground glass fittings or any similar leak-free noncontaminating fittings. For the first, third, and fourth impingers, use the Greenburg-Smith design, modified by replacing the tip with a 1.3 cm (½ in.) ID glass tube extending to about 1.3 cm (½ in.) from the bottom of the flask. For the second impinger, use the Greenburg-Smith design with the standard tip. Place a thermometer, capable of measuring temperature to within 1 °C (2 °F) at the outlet of the fourth impinger for monitoring purposes.

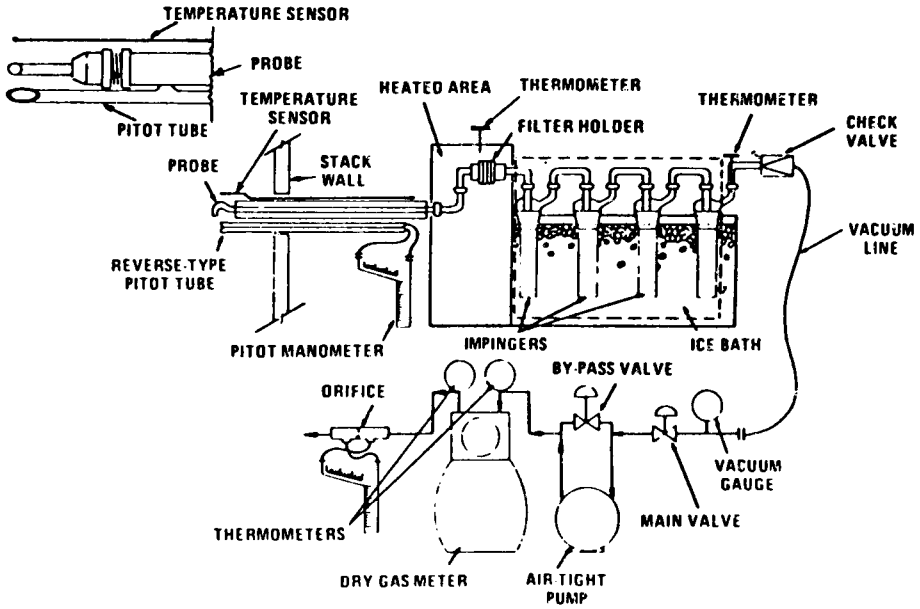

Figure 12-1. Inorganic lead sampling train.

3.2 Sample Recovery. The following items are needed:

3.2.1 Probe-Liner and Probe-Nozzle Brushes, Petri Dishes, Plastic Storage Containers, and Funnel and Rubber Policeman. Same as Method 5, Sections 2.2.1, 2.2.4, 2.2.6, and 2.2.7, respectively.

3.2.2 Wash Bottles. Glass (2).

3.2.3 Sample Storage Containers. Chemically resistant, borosilicate glass bottles, for 0.1 N nitric acid (HNO_3) impinger and probe solutions and washes, 1000-ml. Use screw-cap liners that are either rubber-backed Teflon*

*Mention of trade names or specific products does not constitute endorsement by the U.S. Environmental Protection Agency.

or leak-free and resistant to chemical attack by 0.1 N HNO_3. (Narrow mouth glass bottles have been found to be less prone to leakage.)

3.2.4 Graduated Cylinder and/or Balance. To measure condensed water to within 2 ml or 1 g. Use a graduated cylinder that has a minimum capacity of 500 ml, and subdivisions no greater than 5 ml. (Most laboratory balances are capable of weighing to the nearest 0.5 g or less.)

3.2.5 Funnel. Glass, to aid in sample recovery.

3.3 Analysis. The following equipment is needed:

3.3.1 Atomic Absorption Spectrophotometer. With lead hollow cathode lamp and burner for air/acetylene flame.

3.3.2 Hot Plate.

3.3.3 Erlenmeyer Flasks. 125-ml, 24/40 $.

3.3.4 Membrane Filters. Millipore SCWPO 4700 or equivalent.

3.3.5 Filtration Apparatus. Millipore vacuum filtration unit, or equivalent, for use with the above membrane filter.

3.3.6 Volumetric Flasks. 100-ml, 250-ml, and 1000-ml.

4. *Reagents*

4.1 Sampling. The reagents used in sampling are as follows:

4.1.1 Filter. Gelman Spectro Grade, Reeve Angel 934 AH, MSA 1106 BH, all with lot assay for Pb, or other high-purity glass fiber filters, without organic binder, exhibiting at least 99.95 percent efficiency (<0.05 percent penetration) on 0.3 micron dioctyl phthalate smoke particles. Conduct the filter efficiency test using ASTM Standard Method D2986–71 (incorporated by reference—see §60.17) or use test data from the supplier's quality control program.

4.1.2 Silica Gel, Crushed Ice, and Stopcock Grease. Same as Method 5, Sections 3.1.2, 3.1.4, and 3.1.5, respectively.

4.1.3 Water. Deionized distilled, to conform to ASTM Specification D1192–77 (incorporated by reference—see §60.17), Type 3. If high concentrations of organic matter are not expected to be present, the analyst may delete the potassium permanganate test for oxidizable organic matter.

4.1.4 Nitric Acid, 0.1 N. Dilute 6.5 ml of concentrated HNO_3 to 1 liter with deionized distilled water. (It may be desirable to run blanks before field use to eliminate a high blank on test samples.)

4.2 Pretest Preparation. 6 N HNO_3 is needed. Dilute 390 ml of concentrated HNO_3 to 1 liter with deionized distilled water.

4.3 Sample Recovery. 0.1 N HNO_3 (same as 4.1.4 above) is needed for sample recovery.

4.4 Analysis. The following reagents are needed for analysis (use ACS reagent grade chemicals or equivalent, unless otherwise specified):

4.4.1 Water. Same as 4.1.3 above.

4.4.2 Nitric Acid. Concentrated.

4.4.3 Nitric Acid, 50 percent (V/V). Dilute 500 ml of concentrated HNO_3 to 1 liter with deionized distilled water.

4.4.4 Stock Lead Standard Solution, 1000 µg Pb/ml. Dissolve 0.1598 g of lead nitrate [$Pb(NO_3)_2$] in about 60 ml of deionized distilled water, add 2 ml concentrated HNO_3, and dilute to 100 ml with deionized distilled water.

4.4.5 Working Lead Standards. Pipet 0.0, 1.0, 2.0, 3.0, 4.0, and 5.0 ml of the stock lead standard solution (4.4.4) into 250-ml volumetric flasks. Add 5 ml of concentrated HNO_3 to each flask and dilute to volume with deionized distilled water. These working standards contain 0.0, 4.0, 8.0, 12.0, 16.0, and 20.0 µg Pb/ml, respectively. Prepare, as needed, additional standards at other concentrations in a similar manner.

4.4.6 Air. Suitable quality for atomic absorption analysis.

4.4.7 Acetylene. Suitable quality for atomic absorption analysis.

4.4.8 Hydrogen Peroxide, 3 percent (V/V). Dilute 10 ml of 30 percent H_2O_2 to 100 ml with deionized distilled water.

5. *Procedure*

5.1 Sampling. The complexity of this method is such that, in order to obtain reliable results, testers should be trained and experienced with the test procedures.

5.1.1 Pretest Preparation. Follow the same general procedure given in Method 5, Section 4.1.1, except the filter need not be weighed.

5.1.2 Preliminary Determinations. Follow the same general procedure given in Method 5, Section 4.1.2.

5.1.3 Preparation of Collection Train. Follow the same general procedure given in Method 5, Section 4.1.3, except place 100 ml of 0.1 N HNO_3 in each of the first two impingers, leave the third impinger empty, and transfer approximately 200 to 300 g of preweighed silica gel from its container to the fourth impinger. Set up the train as shown in Figure 12–1.

5.1.4 Leak-Check Procedures. Follow the general leak-check procedures given in Method 5, Sections 4.1.4.1. (Pretest Leak-Check), 4.1.4.2 (Leak-Checks During the Sample Run), and 4.1.4.3 (Post-Test Leak-Check).

5.1.5 Sampling Train Operation. Follow the same general procedure given in Method 5, Section 4.1.5. For each run, record the data required on a data sheet such as the one shown in EPA Method 5, Figure 5–2.

5.1.6 Calculation of Percent Isokinetic. Same as Method 5, Section 4.1.6.

5.2 Sample Recovery. Begin proper clean-up procedure as soon as the probe is removed from the stack at the end of the sampling period.

Allow the probe to cool. When it can be safely handled, wipe off all external particulate matter near the tip of the probe nozzle and place a cap over it. Do not cap off the probe tip tightly while the sampling train is cooling down as this would create a vacuum in the filter holder, thus drawing liquid from the impingers into the filter.

Before moving the sampling train to the cleanup site, remove the probe from the sampling train, wipe off the silicone grease, and cap the open outlet of the probe. Be careful not to lose any condensate that might be present. Wipe off the silicone grease from the glassware inlet where the probe was fastened and cap the inlet. Remove the umbilical cord from the last impinger and cap the impinger. The tester may use ground-glass stoppers, plastic caps, or serum caps to close these openings.

Transfer the probe and filter-impinger assembly to a cleanup area, which is clean and protected from the wind so that the chances of contaminating or losing the sample are minimized.

Inspect the train prior to and during disassembly and note any abnormal conditions. Treat the samples as follows:

5.2.1 *Container No. 1* (Filter), Carefully remove the filter from the filter holder and place it in its identified petri dish container. If it is necessary to fold the filter, do so such that the sample-exposed side is inside the fold. Carefully transfer to the petri dish any visible sample matter and/or filter fibers that adhere to the filter holder gasket by using a dry Nylon bristle brush and/or a sharp-edged blade. Seal the container.

5.2.2 *Container No. 2* (Probe). Taking care that dust on the outside of the probe or other exterior surfaces does not get into the sample, quantitatively recover sample matter or any condensate from the probe nozzle, probe fitting, probe liner, and front half of the filter holder by washing these components with 0.1 N HNO_3 and placing the wash into a glass sample storage container. Measure and record (to the nearest 2-ml) the total amount of 0.1 N HNO_3 used for each rinse. Perform the 0.1 N HNO_3 rinses as follows:

Carefully remove the probe nozzle and rinse the inside surfaces with 0.1 N HNO_3 from a wash bottle while brushing with a stainless steel, Nylon-bristle brush. Brush until the 0.1 N HNO_3 rinse shows no visible particles, then make a final rinse of the inside surface.

Brush and rinse with 0.1 N HNO_3 the inside parts of the Swagelok fitting in a similar way until no visible particles remain.

Rinse the probe liner with 0.1 N HNO_3. While rotating the probe so that all inside surfaces will be rinsed with 0.1 N HNO_3, tilt the probe and squirt 0.1 N HNO_3 into its upper end. Let the 0.1 N HNO_3 drain from the lower end into the sample container. The tester may use a glass funnel to aid in transferring liquid washes to the container. Follow the rinse with a probe brush. Hold the probe in an inclined position, squirt 0.1 N HNO_3 into the upper end of the probe as the probe brush is being pushed with a twisting action through the probe; hold the sample container underneath the lower end of the probe and catch any 0.1 N HNO_3 and sample matter that is brushed from the probe. Run the brush through the probe three times or more until no visible sample matter is carried out with the 0.1 N HNO_3 and none remains on the probe liner on visual inspection. With stainless steel or other metal probes, run the brush through in the above prescribed manner at least six times, since metal probes have small crevices in which sample matter can be entrapped. Rinse the brush with 0.1 N HNO_3 and quantitatively collect these washings in the sample container. After the brushing make a final rinse of the probe as described above.

It is recommended that two people clean the probe to minimize loss of sample. Between sampling runs, keep brushes clean and protected from contamination.

After insuring that all joints are wiped clean of silicone grease, brush and rinse with 0.1 N HNO_3 the inside of the front half of the filter holder. Brush and rinse each surface three times or more, if needed, to remove visible sample matter. Make a final rinse of the brush and filter holder. After all 0.1 N HNO_3 washings and sample matter are collected in the sample container, tighten the lid on the sample container so that the fluid will not leak out when it is shipped to the laboratory. Mark the height of the fluid level to determine whether leakage occurs during transport. Label the container to clearly identify its contents.

5.2.3 *Container No. 3* (Silica Gel). Check the color of the indicating silica gel to determine if it has been completely spent and make a notation of its condition. Transfer the silica gel from the fourth impinger to the original container and seal. The tester may use a funnel to pour the silica gel and a rubber policeman to remove the silica gel from the impinger. It is not necessary to remove the small amount of particles that may adhere to the walls and are difficult to remove. Since the gain in weight is to be used for moisture calculations, do not use any water or other liquids to transfer the silica gel. If a balance is available in the field, the tester may follow procedure for Container No. 3 under Section 5.4 (Analysis).

5.2.4 *Container No. 4* (Impingers). Due to the large quantity of liquid involved, the tester may place the impinger solutions in several containers. Clean each of the first three impingers and connecting glassware in the following manner:

1. Wipe the impinger ball joints free of silicone grease and cap the joints.

2. Rotate and agitate each impinger, so that the impinger contents might serve as a rinse solution.

3. Transfer the contents of the impingers to a 500-ml graduated cylinder. Remove the outlet ball joint cap and drain the contents through this opening. Do not separate the impinger parts (inner and outer tubes) while transferring their contents to the cylinder. Measure the liquid volume to within ±2 ml. Alternatively, determine the weight of the liquid to within ±0.5 g. Record in the log the volume or weight of the liquid present, along with a notation of any color or film observed in the impinger catch. The liquid volume or weight is needed, along with the silica gel data, to calculate the stack gas moisture content (see Method 5, Figure 5–3).

4. Transfer the contents to Container No. 4.

5. Note: In steps 5 and 6 below, measure and record the total amount of 0.1 N HNO_3 used for rinsing. Pour approximately 30 ml of 0.1 N HNO_3 into each of the first three impingers and agitate the impingers. Drain the 0.1 N HNO_3 through the outlet arm of each impinger into Container No. 4. Repeat this operation a second time; inspect the impingers for any abnormal conditions.

6. Wipe the ball joints of the glassware connecting the impingers free of silicone grease and rinse each piece of glassware twice with 0.1 N HNO_3; transfer this rinse into Container No. 4. (*Do not rinse or brush the glass-fritted filter support.*) Mark the height of the fluid level to determine whether leakage occurs during transport. Label the container to clearly identify its contents.

5.2.5 Blanks. Save 200 ml of the 0.1 N HNO_3 used for sampling and cleanup as a blank. Take the solution directly from the bottle being used and place into a glass sample container labeled ''0.1 N HNO_3 blank.''

5.3 Sample Preparation.

5.3.1 *Container No. 1* (Filter). Cut the filter into strips and transfer the strips and all loose particulate matter into a 125-ml Erlenmeyer flask. Rinse the petri dish with 10 ml of 50 percent HNO_3 to insure a quantitative transfer and add to the flask. (Note: If the total volume required in Section 5.3.3 is expected to exceed 80 ml, use a 250-ml Erlenmeyer flask in place of the 125-ml flask.)

5.3.2 *Containers No. 2 and No. 4* (Probe and Impingers). (Check the liquid level in Containers No. 2 and/or No. 4 and confirm as to whether or not leakage occurred during transport; note observation on the analysis sheet. If a noticeable amount of leakage had occurred, either void the sample or take steps, subject to the approval of the Administrator, to adjust the final results.) Combine the contents of Containers No. 2 and No. 4 and take to dryness on a hot plate.

5.3.3 Sample Extraction for Lead. Based on the approximate stack gas particulate concentration and the total volume of stack gas sampled, estimate the total weight of particulate sample collected. Then transfer the residue from Containers No. 2 and No. 4 to the 125-ml Erlenmeyer flask that contains the filter using rubber policeman and 10 ml of 50 percent HNO_3 for every 100 mg of sample collected in the train or a minimum of 30 ml of 50 percent HNO_3 whichever is larger.

Place the Erlenmeyer flask on a hot plate and heat with periodic stirring for 30 min at a temperature just below boiling. If the sample volume falls below 15 ml, add more 50 percent HNO_3. Add 10 ml of 3 percent H_2O_2 and continue heating for 10 min. Add 50 ml of hot (80 °C) deionized distilled water and heat for 20 min. Remove the flask from the hot plate and allow to cool. Filter the sample through a Millipore membrane filter or equivalent and transfer the filtrate to a 250-ml volumetric flask. Dilute to volume with deionized distilled water.

5.3.4 Filter Blank. Determine a filter blank using two filters from each lot of filters used in the sampling train. Cut each filter into strips and place each filter in a separate 125-ml Erlenmeyer flask. Add 15 ml of 50 percent HNO_3 and treat as described in Section 5.3.3 using 10 ml of 3 percent H_2O_2 and 50 ml of hot, deionized distilled water. Filter and dilute to a total volume of 100 ml using deionized distilled water.

5.3.5 0.1 N HNO_3 Blank. Take the entire 200 ml of 0.1 N HNO_3 to dryness on a steam bath, add 15 ml of 50 percent HNO_3, and treat as described in Section 5.3.3 using 10 ml of 3 percent H_2O_2 and 50 ml of hot, deionized distilled water. Dilute to a total volume of 100 ml using deionized distilled water.

5.4 Analysis.

5.4.1 Lead Determination. Calibrate the spectrophotometer as described in Section 6.2 and determine the absorbance for each source sample, the filter blank, and 0.1 N HNO_3 blank. Analyze each sample three times in this manner. Make appropriate dilutions, as required, to bring all sample Pb concentrations into the linear absorbance range of the spectrophotometer.

If the Pb concentration of a sample is at the low end of the calibration curve and high accuracy is required, the sample can be taken to dryness on a hot plate and the residue dissolved in the appropriate volume of water to bring it into the optimum range of the calibration curve.

5.4.2 Check for Matrix Effects on the Lead Results. Since the analysis for Pb by atomic absorption is sensitive to the chemical composition and to the physical properties (viscosity, pH) of the sample (matrix effects), the analyst shall check at least one sample from each source using the method of additions as follows:

Add or spike an equal volume of standard solution to an aliquot of the sample solution, then measure the absorbance of the resulting solution and the absorbance of an aliquot of unspiked sample.

Next, calculate the Pb concentration C_s in µg/ml of the sample solution by using the following equation:

$$C_s = C_a \frac{A_s}{A_t - A_s} \qquad \text{Eq. 12-1}$$

Where:

C_a=Pb concentration of the standard solution, µg/ml.

A_s=Absorbance of the sample solution.

A_t=Absorbance of the spiked sample solution.

Volume corrections will not be required if the solutions as analyzed have been made to the same final volume. Therefore, C_s and C_a represent Pb concentration before dilutions.

Method of additions procedures described on pages 9–4 and 9–5 of the section entitled ''General Information'' of the Perkin Elmer Corporation Atomic Absorption Spectrophotometry Manual, Number 303–0152 (see Citation 1 of Bibliography) may also be used. In any event, if the results of the method of additions procedure used on the single source sample do not agree to within 5 percent of the value obtained by the routine atomic absorption analysis, then reanalyze all samples from the source using a method of additions procedure.

5.4.3 *Container No. 3* (Silica Gel). The tester may conduct this step in the field. Weigh the spent silica gel (or silica gel plus impinger) to the nearest 0.5 g; record this weight.

6. *Calibration*

Maintain a laboratory log of all calibrations.

6.1 Sampling Train Calibration. Calibrate the sampling train components according to the indicated sections of Method 5: Probe Nozzle (Section 5.1); Pitot Tube (Section 5.2); Metering System (Section 5.3); Probe Heater (Section 5.4); Temperature Gauges (Section 5.5); Leak-Check of the Metering System (Section 5.6); and Barometer (Section 5.7).

6.2 Spectrophotometer. Measure the absorbance of the standard solutions using the instrument settings recommended by the spectrophotometer manufacturer. Repeat until good agreement (±3 percent) is obtained between two consecutive readings. Plot the absorbance (y-axis) versus concentration in µg Pb/ml (x-axis). Draw or compute a straight line through the linear portion of the curve. Do not force the calibration curve through zero, but if the curve does not pass through the origin or at least lie closer to the origin than ±0.003 absorbance units, check for incorrectly prepared standards and for curvature in the calibration curve.

To determine stability of the calibration curve, run a blank and a standard after every five samples and recalibrate, as necessary.

7. *Calculations*

7.1 Dry Gas Volume. Using the data from this test, calculate $V_{m(std)}$, the total volume of dry gas metered corrected to standard conditions (20 °C and 760 mm Hg), by using Equation 5–1 of Method 5. If necessary, adjust $V_{w(std)}$ for leakages as outlined in Section 6.3 of Method 5. See the field data sheet for the average dry gas meter temperature and average orifice pressure drop.

7.2 Volume of Water Vapor and Moisture Content. Using data obtained in this test and Equations 5–2 and 5–3 of Method 5, calculate the volume of water vapor $V_{w(std)}$ and the moisture content B_{ws} of the stack gas.

7.3 Total Lead in Source Sample. For each source sample correct the average absorbance for the contribution of the filter blank and the 0.1 N HNO_3 blank. Use the calibration curve and this corrected absorbance to determine the µg Pb concentration in the sample aspirated into the spectrophotometer. Calculate the total Pb content C°_{Pb} (in µg) in the original source sample; correct for all the dilutions that were made to bring the Pb concentration of the sample into the linear range of the spectrophotometer.

7.4 Lead Concentration. Calculate the stack gas Pb concentration C_{Pb} in mg/dscm as follows:

$$C_{Pb} = K \frac{C^{o}_{Pb}}{V_{m(std)}} \qquad \text{Eq. 12-2}$$

Where:

K=0.001 mg/µg for metric units.

=2.205 lb/µg×10^{-9} for English units.

7.5 Isokinetic Variation and Acceptable Results. Same as Method 5, Sections 6.11 and 6.12, respectively. To calculate v_s, the average stack gas velocity, use Equation 2–9 of Method 2 and the data from this field test.

8. *Alternative Test Methods for Inorganic Lead*

8.1 Simultaneous Determination of Particulate and Lead Emissions. The tester may use Method 5 to simultaneously determine Pb provided that (1) he uses acetone to remove particulate from the probe and inside of the filter holder as specified by Method 5, (2) he uses 0.1 N HNO_3 in the impingers, (3) he uses a glass fiber filter with a low Pb background, and (4) he treats and analyzes the entire train contents, including the impingers, for Pb as described in Section 5 of this method.

8.2 Filter Location. The tester may use a filter between the third and fourth impinger provided that he includes the filter in the analysis for Pb.

8.3 In-stack Filter. The tester may use an in-stack filter provided that (1) he uses a glass-lined probe and at least two impingers, each containing 100 ml of 0.1 N HNO_3, after the in-stack filter and (2) he recovers and analyzes the probe and impinger contents for

Pb. Recover sample from the nozzle with acetone if a particulate analysis is to be made.

9. *Bibliography*

1. Perkin Elmer Corporation. Analytical Methods for Atomic Absorption Spectrophotometry. Norwalk, CT. September 1976.

2. American Society for Testing and Materials. Annual Book of ASTM Standards. Part 31; Water, Atmospheric Analysis. Philadelphia, PA. 1974. p. 40–42.

3. Klein, R. and C. Hach. Standard Additions—Uses and Limitations in Spectrophotometric Analysis. *Amer. Lab. 9:*21–27. 1977.

4. Mitchell, W.J. and M.R. Midgett. Determining Inorganic and Alkyl Lead Emissions from Stationary Sources. U.S. Environmental Protection Agency, Emission Monitoring and Support Laboratory. Research Triangle Park, NC. (Presented at National APCA Meeting. Houston. June 26, 1978).

5. Same as Method 5, Citations 2 to 5 and 7 of bibliography.

METHOD 13A—DETERMINATION OF TOTAL FLUORIDE EMISSIONS FROM STATIONARY SOURCES; SPADNS ZIRCONIUM LAKE METHOD

1. *Principle and Applicability*

1.1 Applicability. This method applies to the determination of fluoride (F) emissions from sources as specified in the regulations. It does not measure fluorocarbons, such as freons.

1.2 Principle. Gaseous and particulate F are withdrawn isokinetically from the source and collected in water and on a filter. The total F is then determined by the SPADNS Zirconium Lake Colorimetric Method.

2. *Range and Sensitivity*

The range of this method is 0 to 1.4 μg F/ml. Sensitivity has not been determined.

3. *Interferences*

Large quantities of chloride will interfere with the analysis, but this interference can be prevented by adding silver sulfate into the distillation flask (see Section 7.3.4). If chloride ion is present, it may be easier to use the Specific Ion Electrode Method (Method 13B). Grease on sample-exposed surfaces may cause low F results due to adsorption.

4. *Precision, Accuracy, and Stability*

4.1 Precision. The following estimates are based on a collaborative test done at a primary aluminum smelter. In the test, six laboratories each sampled the stack simultaneously using two sampling trains for a total of 12 samples per sampling run. Fluoride concentrations encountered during the test ranged from 0.1 to 1.4 mg F/m^3. The within-laboratory and between-laboratory standard deviations, which include sampling and analysis errors, were 0.044 mg F/m^{3}with 60 degrees of freedom and 0.064 mg F/m^{3}with five degrees of freedom, respectively.

4.2 Accuracy. The collaborative test did not find any bias in the analytical method.

4.3 Stability. After the sample and colorimetric reagent are mixed, the color formed is stable for approximately 2 hours. A 3 °C temperature difference between the sample and standard solutions produces an error of approximately 0.005 mg F/liter. To avoid this error, the absorbances of the sample and standard solutions must be measured at the same temperature.

5. *Apparatus*

5.1 Sampling Train. A schematic of the sampling train is shown in Figure 13A–1; it is similar to the Method 5 train except the filter position is interchangeable. The sampling train consists of the following components:

5.1.1 Probe Nozzle, Pitot Tube, Differential Pressure Gauge, Filter Heating System, Metering System, Barometer, and Gas Density Determination Equipment. Same as Method 5, Sections 2.1.1, 2.1.3, 2.1.4, 2.1.6, 2.1.8, 2.1.9, and 2.1.10. When moisture condensation is a problem, the filter heating system is used.

5.1.2 Probe Liner. Borosilicate glass or 316 stainless steel. When the filter is located immediately after the probe, the tester may use a probe heating system to prevent filter plugging resulting from moisture condensation, but the tester shall not allow the temperature in the probe to exceed 120±14 °C (248±25 °F).

5.1.3 Filter Holder. With positive seal against leakage from the outside or around the filter. If the filter is located between the probe and first impinger, use borosilicate glass or stainless steel with a 20-mesh stainless steel screen filter support and a silicone rubber gasket; do not use a glass frit or a sintered metal filter support. If the filter is located between the third and fourth impingers, the tester may use borosilicate glass with a glass frit filter support and a silicone rubber gasket. The tester may also use other materials of construction with approval from the Administrator.

5.1.4 Impingers. Four impingers connected as shown in Figure 13A–1 with ground-glass (or equivalent), vacuum-tight fittings. For the first, third, and fourth impingers, use the Greenburg-Smith design, modified by replacing the tip with a 1.3-cm-inside-diameter (½ in.) glass tube extending to 1.3 cm (½ in.) from the bottom of the flask. For the second impinger, use a Greenburg-Smith impinger with the standard tip. The tester may use modifications (e.g., flexible connections between the impingers or materials other than glass), subject to the approval of the Administrator. Place a thermometer, capable of measuring

temperature to within 1 °C (2 °F), at the outlet of the fourth impinger for monitoring purposes.

5.2 Sample Recovery. The following items are needed:

5.2.1 Probe-Liner and Probe-Nozzle Brushes, Wash Bottles, Graduated Cylinder and/or Balance, Plastic Storage Containers, Rubber Policeman, Funnel. Same as Method 5, Sections 2.2.1 to 2.2.2 and 2.2.5 to 2.2.8, respectively.

5.2.2 Sample Storage Container. Wide-mouth, high-density-polyethylene bottles for impinger water samples, 1-liter.

5.3 Analysis. The following equipment is needed:

5.3.1 Distillation Apparatus. Glass distillation apparatus assembled as shown in Figure 13A–2.

5.3.2 Bunsen Burner.

5.3.3 Electric Muffle Furnace. Capable of heating to 600 °C.

5.3.4 Crucibles. Nickel, 75- to 100-ml.

5.3.5 Beakers. 500-ml and 1500-ml.

5.3.6 Volumetric Flasks. 50-ml.

5.3.7 Erlenmeyer Flasks or Plastic Bottles. 500-ml.

5.3.8 Constant Temperature Bath. Capable of maintaining a constant temperature of ±1.0 °C at room temperature conditions.

5.3.9 Balance. 300-g capacity to measure to ±0.5 g.

5.3.10 Spectrophotometer. Instrument that measures absorbance at 570 nm and provides at least a 1-cm light path.

5.3.11 Spectrophotometer Cells. 1-cm pathlength.

6. *Reagents*

6.1 Sampling. Use ACS reagent-grade chemicals or equivalent, unless otherwise specified. The reagents used in sampling are as follows:

6.1.1 Filters.

6.1.1.1 If the filter is located between the third and fourth impingers, use a Whatman[1] No. 1 filter, or equivalent, sized to fit the filter holder.

[1] Mention of company or product names does not constitute endorsement by the U.S. Environmental Protection Agency.

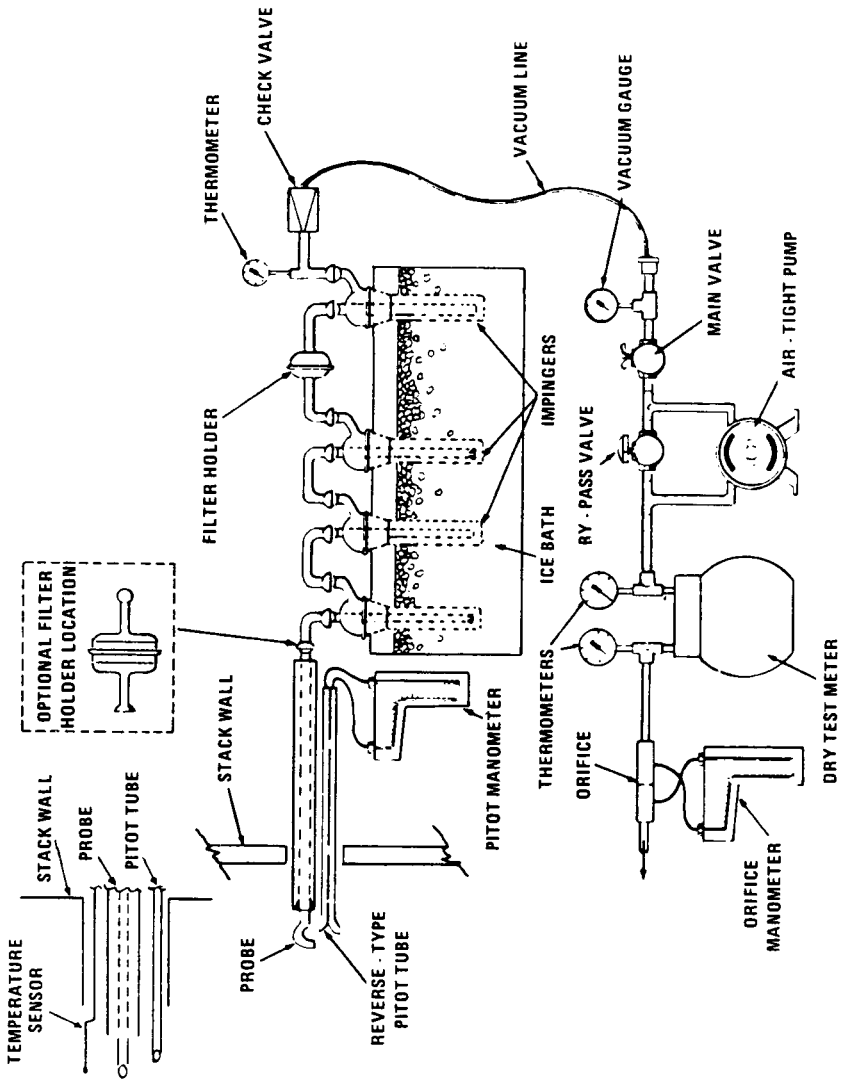

Figure 13A-1. Fluoride sampling train.

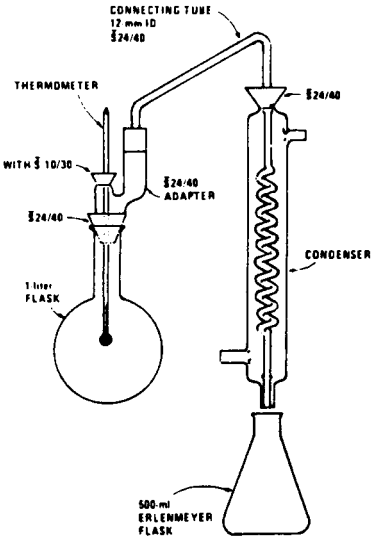

Figure 13A-2. Fluoride distillation apparatus.

6.1.1.2 If the filter is located between the probe and first impinger, use any suitable medium (e.g., paper, organic membrane) that conforms to the following specifications: (1) The filter can withstand prolonged exposure to temperatures up to 135 °C (275 °F). (2) The filter has at least 95 percent collection efficiency (≤5 percent penetration) for 0.3 µm dioctyl phthalate smoke particles. Conduct the filter efficiency test before the test series, using ASTM Standard Method D 2986–71, or use test data from the supplier's quality control program. (3) The filter has a low F blank value (≤0.015 mg F/cm^{2}of filter area). Before the test series, determine the average F blank value of at least three filters (from the lot to be used for sampling) using the applicable procedures described in Sections 7.3 and 7.4 of this method. In general, glass fiber filters have high and/or variable F blank values, and will not be acceptable for use.

6.1.2 Water. Deionized distilled, to conform to ASTM Specification D 1193–74, Type 3. If high concentrations of organic matter are not expected to be present, the analyst may delete the potassium permanganate test for oxidizable organic matter.

6.1.3 Silica Gel, Crushed Ice, and Stopcock Grease. Same as Method 5, Sections 3.1.2, 3.1.4, and 3.1.5, respectively.

6.2 Sample Recovery. Water, from same container as described in Section 6.1.2, is needed for sample recovery.

6.3 Sample Preparation and Analysis. The reagents needed for sample preparation and analysis are as follows:

6.3.1 Calcium Oxide (CaO). Certified grade containing 0.005 percent F or less.

6.3.2 Phenolphthalein Indicator. Dissolve 0.1 g of phenolphthalein in a mixture of 50 ml of 90 percent ethanol and 50 ml of deionized distilled water.

6.3.3 Silver Sulfate ($Ag_2 SO_4$).

6.3.4 Sodium Hydroxide (NaOH). Pellets.

6.3.5 Sulfuric Acid (H_2SO_4), Concentrated.

6.3.6 Sulfuric Acid, 25 percent (V/V). Mix 1 part of concentrated H_2SO_4 with 3 parts of deionized distilled water.

6.3.7 Filters. Whatman No. 541, or equivalent.

6.3.8 Hydrochloric Acid (HCl), Concentrated.

6.3.9 Water. From same container as described in Section 6.1.2.

6.3.10 Fluoride Standard Solution, 0.01 mg F/ml. Dry in an oven at 110 °C for at least 2 hours. Dissolve 0.2210 g of NaF in 1 liter of deionized distilled water. Dilute 100 ml of this solution to 1 liter with deionized distilled water.

6.3.11 SPADNS Solution [4, 5 dihydroxy-3-(p-sulfophenylazo)-2,7-naphthalene-disulfonic acid trisodium salt]. Dissolve 0.960±0.010 g of SPADNS reagent in 500 ml deionized distilled water. If stored in a well-sealed bottle protected from the sunlight, this solution is stable for at least 1 month.

6.3.12 Spectrophotometer Zero Reference Solution. Prepare daily. Add 10 ml of SPADNS solution (6.3.11) to 100 ml deionized distilled water, and acidify with a solution prepared by diluting 7 ml of concentrated HCl to 10 ml with deionized distilled water.

6.3.13 SPADNS Mixed Reagent. Dissolve 0.135±0.005 g of zirconyl chloride octahydrate ($ZrOCl_2 \cdot 8H_2O$) in 25 ml of deionized distilled water. Add 350 ml of concentrated HCl, and dilute to 500 ml with deionized distilled water. Mix equal volumes of this solution and SPADNS solution to form a single reagent. This reagent is stable for at least 2 months.

7. *Procedure*

7.1 Sampling. Because of the complexity of this method, testers should be trained and experienced with the test procedures to assure reliable results.

7.1.1 Pretest Preparation. Follow the general procedure given in Method 5, Section 4.1.1, except the filter need not be weighed.

7.1.2 Preliminary Determinations. Follow the general procedure given in Method 5, Section 4.1.2., except the nozzle size selected must maintain isokinetic sampling rates below 28 liters/min (1.0 cfm).

7.1.3 Preparation of Collection Train. Follow the general procedure given in Method 5, Section 4.1.3, except for the following variations:

Place 100 ml of deionized distilled water in each of the first two impingers, and leave the

third impinger empty. Transfer approximately 200 to 300 g of preweighed silica gel from its container to the fourth impinger.

Assemble the train as shown in Figure 13A–1 with the filter between the third and fourth impingers. Alternatively, if a 20-mesh stainless steel screen is used for the filter support, the tester may place the filter between the probe and first impinger. The tester may also use a filter heating system to prevent moisture condensation, but shall not allow the temperature around the filter holder to exceed 120±14 °C (248±25 °F). Record the filter location on the data sheet.

7.1.4 Leak-Check Procedures. Follow the leak-check procedures given in Method 5, Sections 4.1.4.1 (Pretest Leak-Check), 4.1.4.2 (Leak-Checks During the Sample Run), and 4.1.4.3 (Post-Test Leak-Check).

7.1.5 Fluoride Train Operation. Follow the general procedure given in Method 5, Section 4.1.5, keeping the filter and probe temperatures (if applicable) at 120±14 °C (248±25 °F) and isokinetic sampling rates below 28 liters/min (1.0 cfm). For each run, record the data required on a data sheet such as the one shown in Method 5, Figure 5–2.

7.2 Sample Recovery. Begin proper cleanup procedure as soon as the probe is removed from the stack at the end of the sampling period.

Allow the probe to cool. When it can be safely handled, wipe off all external particulate matter near the tip of the probe nozzle and place a cap over it to keep from losing part of the sample. Do not cap off the probe tip tightly while the sampling train is cooling down, because a vacuum would form in the filter holder, thus drawing impinger water backwards.

Before moving the sample train to the cleanup site, remove the probe from the sample train, wipe off the silicone grease, and cap the open outlet of the probe. Be careful not to lose any condensate, if present. Remove the filter assembly, wipe off the silicone grease from the filter holder inlet, and cap this inlet. Remove the umbilical cord from the last impinger, and cap the impinger. After wiping off the silicone grease, cap off the filter holder outlet and any open impinger inlets and outlets. The tester may use ground-glass stoppers, plastic caps, or serum caps to close these openings.

Transfer the probe and filter-impinger assembly to an area that is clean and protected from the wind so that the chances of contaminating or losing the sample is minimized.

Inspect the train before and during disassembly, and note any abnormal conditions. Treat the samples as follows:

7.2.1 *Container No. 1* (Probe, Filter, and Impinger Catches). Using a graduated cylinder, measure to the nearest ml, and record the volume of the water in the first three impingers; include any condensate in the probe in this determination. Transfer the impinger water from the graduated cylinder into this polyethylene container. Add the filter to this container. (The filter may be handled separately using procedures subject to the Administrator's approval.) Taking care that dust on the outside of the probe or other exterior surfaces does not get into the sample, clean all sample-exposed surfaces (including the probe nozzle, probe fitting, probe liner, first three impingers, impinger connectors, and filter holder) with deionized distilled water. Use less than 500 ml for the entire wash. Add the washings to the sampler container. Perform the deionized distilled water rinses as follows:

Carefully remove the probe nozzle and rinse the inside surface with deionized distilled water from a wash bottle. Brush with a Nylon bristle brush, and rinse until the rinse shows no visible particles, after which make a final rinse of the inside surface. Brush and rinse the inside parts of the Swagelok fitting with deionized distilled water in a similar way.

Rinse the probe liner with deionized distilled water. While squirting the water into the upper end of the probe, tilt and rotate the probe so that all inside surfaces will be wetted with water. Let the water drain from the lower end into the sample container. The tester may use a funnel (glass or polyethylene) to aid in transferring the liquid washes to the container. Follow the rinse with a probe brush. Hold the probe in an inclined position, and squirt deionized distilled water into the upper end as the probe brush is being pushed with a twisting action through the probe. Hold the sample container underneath the lower end of the probe, and catch any water and particulate matter that is brushed from the probe. Run the brush through the probe three times or more. With stainless steel or other metal probes, run the brush through in the above prescribed manner at least six times since metal probes have small crevices in which particulate matter can be entrapped. Rinse the brush with deionized distilled water, and quantitatively collect these washings in the sample container. After the brushing, make a final rinse of the probe as described above.

It is recommended that two people clean the probe to minimize sample losses. Between sampling runs, keep brushes clean and protected from contamination.

Rinse the inside surface of each of the first three impingers (and connecting glassware) three separate times. Use a small portion of deionized distilled water for each rinse, and brush each sample-exposed surface with a Nylon bristle brush, to ensure recovery of fine particulate matter. Make a final rinse of each surface and of the brush.

After ensuring that all joints have been wiped clean of the silicone grease, brush and

rinse with deionized distilled water the inside of the filter holder (front-half only, if filter is positioned between the third and fourth impingers). Brush and rinse each surface three times or more if needed. Make a final rinse of the brush and filter holder.

After all water washings and particulate matter have been collected in the sample container, tighten the lid so that water will not leak out when it is shipped to the laboratory. Mark the height of the fluid level to determine whether leakage occurs during transport. Label the container clearly to identify its contents.

7.2.2 *Container No. 2* (Sample Blank). Prepare a blank by placing an unused filter in a polyethylene container and adding a volume of water equal to the total volume in Container No. 1. Process the blank in the same manner as for Container No. 1.

7.2.3 *Container No. 3* (Silica Gel). Note the color of the indicating silica gel to determine whether it has been completely spent and make a notation of its condition. Transfer the silica gel from the fourth impinger to its original container and seal. The tester may use a funnel to pour the silica gel and a rubber policeman to remove the silica gel from the impinger. It is not necessary to remove the small amount of dust particles that may adhere to the impinger wall and are difficult to remove. Since the gain in weight is to be used for moisture calculations, do not use any water or other liquids to transfer the silica gel. If a balance is available in the field, the tester may follow the analytical procedure for Container No. 3 in Section 7.4.2.

7.3 Sample Preparation and Distillation. (Note the liquid levels in Containers No. 1 and No. 2 and confirm on the analysis sheet whether or not leakage occurred during transport. If noticeable leakage had occurred, either void the sample or use methods, subject to the approval of the Administrator, to correct the final results.) Treat the contents of each sample container as described below:

7.3.1 *Container No. 1* (Probe, Filter, and Impinger Catches). Filter this container's contents, including the sampling filter, through Whatman No. 541 filter paper, or equivalent, into a 1500-ml beaker.

7.3.1.1 If the filtrate volume exceeds 900 ml, make the filtrate basic (red to phenolphthalein) with NaOH, and evaporate to less than 900 ml.

7.3.1.2 Place the filtered material (including sampling filter) in a nickel crucible, add a few ml of deionized distilled water, and macerate the filters with a glass rod.

Add 100 mg CaO to the crucible, and mix the contents thoroughly to form a slurry. Add two drops of phenolphthalein indicator. Place the crucible in a hood under infrared lamps or on a hot plate at low heat. Evaporate the water completely. During the evaporation of the water, keep the slurry basic (red to phenolphthalein) to avoid loss of F. If the indicator turns colorless (acidic) during the evaporation, add CaO until the color turns red again.

After evaporation of the water, place the crucible on a hot plate under a hood and slowly increase the temperature until the Whatman No. 541 and sampling filters char. It may take several hours to completely char the filters.

Place the crucible in a cold muffle furnace. Gradually (to prevent smoking) increase the temperature to 600 °C, and maintain until the contents are reduced to an ash. Remove the crucible from the furnace and allow to cool.

Add approximately 4 g of crushed NaOH to the crucible and mix. Return the crucible to the muffle furnace, and fuse the sample for 10 minutes at 600 °C.

Remove the sample from the furnace, and cool to ambient temperature. Using several rinsings of warm deionized distilled water, transfer the contents of the crucible to the beaker containing the filtrate. To assure complete sample removal, rinse finally with two 20-ml portions of 25 percent H_2SO_4, and carefully add to the beaker. Mix well, and transfer to a 1-liter volumetric flask. Dilute to volume with deionized distilled water, and mix thoroughly. Allow any undissolved solids to settle.

7.3.2 *Container No. 2* (Sample Blank). Treat in the same manner as described in Section 7.3.1 above.

7.3.3 Adjustment of Acid/Water Ratio in Distillation Flask. (Use a protective shield when carrying out this procedure.) Place 400 ml of deionized distilled water in the distillation flask, and add 200 ml of concentrated H_2SO_4. (Caution: Observe standard precautions when mixing H_2SO_4 with water. Slowly add the acid to the flask with constant swirling.) Add some soft glass beads and several small pieces of broken glass tubing, and assemble the apparatus as shown in Figure 13A–2. Heat the flask until it reaches a temperature of 175 °C to adjust the acid/water ratio for subsequent distillations. Discard the distillate.

7.3.4 Distillation. Cool the contents of the distillation flask to below 80 °C. Pipet an aliquot of sample containing less than 10.0 mg F directly into the distillation flask, and add deionized distilled water to make a total volume of 220 ml added to the distillation flask. (To estimate the appropriate aliquot size, select an aliquot of the solution and treat as described in Section 7.4.1. This will be an approximation of the F content because of possible interfering ions.)

NOTE: If the sample contains chloride, add 5 mg of Ag_2SO_4 to the flask for every mg of chloride.

Place a 250-ml volumetric flask at the condenser exit. Heat the flask as rapidly as possible with a Bunsen burner, and collect all the distillate up to 175 °C. During heatup, play the burner flame up and down the side of the flask to prevent bumping. Conduct the distillation as rapidly as possible (15 minutes or less). Slow distillations have been found to produce low F recoveries. Caution: Be careful not to exceed 175 °C to avoid causing H_2SO_4 to distill over.

If F distillation in the mg range is to be followed by a distillation in the fractional mg range, add 220 ml of deionized distilled water and distill it over as in the acid adjustment step to remove residual F from the distillation system.

The tester may use the acid in the distillation flask until there is carry-over of interferences or poor F recovery. Check for these every tenth distillation using a deionized distilled water blank and a standard solution. Change the acid whenever the F recovery is less than 90 percent or the blank value exceeds 0.1 µg/ml.

7.4 Analysis.

7.4.1 Containers No. 1 and No. 2. After distilling suitable aliquots from Containers No. 1 and No. 2 according to Section 7.3.4, dilute the distillate in the volumetric flasks to exactly 250 ml with deionized distilled water, and mix thoroughly. Pipet a suitable aliquot of each sample distillate (containing 10 to 40 µg F/ml) into a beaker, and dilute to 50 ml with deionized distilled water. Use the same aliquot size for the blank. Add 10 ml of SPADNS mixed reagent (6.3.13), and mix thoroughly.

After mixing, place the sample in a constant-temperature bath containing the standard solutions (see Section 8.2) for 30 minutes before reading the absorbance on the spectrophotometer.

Set the spectrophotometer to zero absorbance at 570 nm with the reference solution (6.3.12), and check the spectrophotometer calibration with the standard solution. Determine the absorbance of the samples, and determine the concentration from the calibration curve. If the concentration does not fall within the range of the calibration curve, repeat the procedure using a different size aliquot.

7.4.2 *Container No. 3* (Silica Gel). Weigh the spent silica gel (or silica gel plus impinger) to the nearest 0.5 g using a balance. The tester may conduct this step in the field.

8. *Calibration*

Maintain a laboratory log of all calibrations.

8.1 Sampling Train. Calibrate the sampling train components according to the indicated sections in Method 5: Probe Nozzle (Section 5.1); Pitot Tube (Section 5.2); Metering System (Section 5.3); Probe Heater (Section 5.4); Temperature Gauges (Section 5.5); Leak Check of Metering System (Section 5.6); and Barometer (Section 5.7).

8.2 Spectrophotometer. Prepare the blank standard by adding 10 ml of SPADNS mixed reagent to 50 ml of deionized distilled water. Accurately prepare a series of standards from the 0.01 mg F/ml standard fluoride solution (6.3.10) by diluting 0, 2, 4, 6, 8, 10, 12, and 14 ml to 100 ml with deionized distilled water. Pipet 50 ml from each solution and transfer each to a separate 100-ml beaker. Then add 10 ml of SPADNS mixed reagent to each. These standards will contain 0, 10, 20, 30, 40 50, 60, and 70 µg F (0 to 1.4 µg/ml), respectively.

After mixing, place the reference standards and reference solution in a constant temperature bath for 30 minutes before reading the absorbance with the spectrophotometer. Adjust all samples to this same temperature before analyzing.

With the spectrophotometer at 570 nm, use the reference solution (6.3.12) to set the absorbance to zero.

Determine the absorbance of the standards. Prepare a calibration curve by plotting µg F/50 ml versus absorbance on linear graph paper. Prepare the standard curve initially and thereafter whenever the SPADNS mixed reagent is newly made. Also, run a calibration standard with each set of samples and if it differs from the calibration curve by ±2 percent, prepare a new standard curve.

9. *Calculations*

Carry out calculations, retaining at least one extra decimal figure beyond that of the acquired data. Round off figures after final calculation. Other forms of the equations may be used, provided that they yield equivalent results.

9.1 Nomenclature

A_d = Aliquot of distillate taken for color development, ml.

A_t = Aliquot of total sample added to still, ml.

B_{ws} = Water vapor in the gas stream, proportion by volume.

C_s = Concentration of F in stack gas, mg/m^3 (mg/ft^3), dry basis, corrected to standard conditions of 760 mm Hg (29.92 in. Hg) and 293°K (528°R).

F_t = Total F in sample, mg.

µg F = Concentration from the calibration curve, µg.

T_m = Absolute average dry gas meter temperature (see Figure 5–2 of Method 5), °K (°R).

T_s = Absolute average stack gas temperature (see Figure 5–2 of Method 5), °K (°R).

V_d = Volume of distillate as diluted, ml.

$V_{m(std)}$ = Volume of gas sample as measured by dry gas meter, corrected to standard conditions, dscm (dscf).

V_t = Total volume of F sample, after final dilution, ml.

$V_{w(std)}$ = Volume of water vapor in the gas sample, corrected to standard conditions, scm (scf).

9.2 Average Dry Gas Meter Temperature and Average Orifice Pressure Drop. See data sheet (Figure 5–2 of Method 5).

9.3 Dry Gas Volume. Calculate $V_{m(std)}$ and adjust for leakage, if necessary, using the equation in Section 6.3 of Method 5.

9.4 Volume of Water Vapor and Moisture Content. Calculate the volume of water vapor $V_{w(std)}$ and moisture content B_{ws} from the data obtained in this method (Figure 13A–1); use Equations 5–2 and 5–3 of Method 5.

9.5 Concentration.

9.5.1 Total Fluoride in Sample. Calculate the amount of F in the sample using the following equation:

$$F_t = 10^{-3} \frac{V_t}{A_t} \frac{V_d}{A_d} (\mu g F) \qquad \text{Eq. 13A-1}$$

9.5.2 Fluoride Concentration in Stack Gas. Determine the F concentration in the stack gas using the following equation:

$$C_s = \frac{F_t}{V_{m(std)}} \qquad \text{Eq. 13A-2}$$

9.6 Isokinetic Variation and Acceptable Results. Use Method 5, Sections 6.11 and 6.12.

10. *Bibliography*

1. Bellack, Ervin, Simplified Fluoride Distillation Method. Journal of the American Water Works Association. *50*:5306. 1958.

2. Mitchell, W. J., J. C. Suggs, and F. J. Bergman. Collaborative Study of EPA Method 13A and Method 13B. Publication No. EPA–600/4–77–050. Environmental Protection Agency. Research Triangle Park, NC. December 1977.

3. Mitchell, W. J. and M. R. Midgett. Adequacy of Sampling Trains and Analytical Procedures Used for Fluoride. Atm. Environ. *10*:865–872. 1976.

METHOD 13B—DETERMINATION OF TOTAL FLUORIDE EMISSIONS FROM STATIONARY SOURCES—SPECIFIC ION ELECTRODE METHOD

1. *Principle and Applicability*

1.1 Applicability. This method applies to the determination of fluoride (F) emissions from stationary sources as specified in the regulations. It does not measure fluorocarbons, such as freons.

1.2 Principle. Gaseous and particulate F are withdrawn isokinetically from the source and collected in water and on a filter. The total F is then determined by the specific ion electrode method.

2. *Range and Sensitivity*

The range of this method is 0.02 to 2,000 µg F/ml; however, measurements of less than 0.1 µg F/ml require extra care. Sensitivity has not been determined.

3. *Interferences*

Grease on sample-exposed surfaces may cause low F results because of adsorption.

4. *Precision and Accuracy*

4.1 Precision. The following estimates are based on a collaborative test done at a primary aluminum smelter. In the test, six laboratories each sampled the stack simultaneously using two sampling trains for a total of 12 samples per sampling run. Fluoride concentrations encountered during the test ranged from 0.1 to 1.4 mg F/m^3. The within-laboratory and between-laboratory standard deviations, which include sampling and analysis errors, are 0.037 mg F/m^{3}with 60 degrees of freedom and 0.056 mg F/m^{3}with five degrees of freedom, respectively.

4.2 Accuracy. The collaborative test did not find any bias in the analytical method.

5. *Apparatus*

5.1 Sampling Train and Sample Recovery. Same as Method 13A, Sections 5.1 and 5.2, respectively.

5.2 Analysis. The following items are needed:

5.2.1 Distillation Apparatus, Bunsen Burner, Electric Muffle Furnace, Crucibles, Beakers, Volumetric Flasks, Erlenmeyer Flasks or Plastic Bottles, Constant Temperature Bath, and Balance. Same as Method 13A, Sections 5.3.1 to 5.3.9, respectively, except include also 100-ml polyethylene beakers.

5.2.2 Fluoride Ion Activity Sensing Electrode.

5.2.3 Reference Electrode. Single junction, sleeve type.

5.2.4 Electrometer. A pH meter with millivolt-scale capable of ±0.1-mv resolution, or a specific ion meter made specifically for specific ion use.

5.2.5 Magnetic Stirrer and TFE[2] Fluorocarbon-Coated Stirring Bars.

6. *Reagents*

6.1 Sampling and Sample Recovery. Same as Method 13A, Sections 6.1 and 6.2, respectively.

6.2 Analysis. Use ACS reagent grade chemicals (or equivalent), unless otherwise specified. The reagents needed for analysis are as follows:

6.2.1 Calcium Oxide (CaO). Certified grade containing 0.005 percent F or less.

6.2.2 Phenolphthalein Indicator. Dissolve 0.1 g of phenolphthalein in a mixture of 50 ml of 90 percent ethanol and 50 ml deionized distilled water.

6.2.3 Sodium Hydroxide (NaOH). Pellets.

[2] Mention of any trade name or specific product does not constitute endorsement by the U.S. Environmental Protection Agency.

6.2.4 Sulfuric Acid (H_2SO_4), Concentrated.

6.2.5 Filters. Whatman No. 541, or equivalent.

6.2.6 Water. From same container as 6.1.2 of Method 13A.

6.2.7 Sodium Hydroxide, 5 M. Dissolve 20 g of NaOH in 100 ml of deionized distilled water.

6.2.8 Sulfuric Acid, 25 percent (V/V). Mix 1 part of concentrated H_2SO_4 with 3 parts of deionized distilled water.

6.2.9 Total Ionic Strength Adjustment Buffer (TISAB). Place approximately 500 ml of deionized distilled water in a 1-liter beaker. Add 57 ml of glacial acetic acid, 58 g of sodium chloride, and 4 g of cyclohexylene dinitrilo tetraacetic acid. Stir to dissolve. Place the beaker in a water bath to cool it. Slowly add 5 M NaOH to the solution, measuring the pH continuously with a calibrated pH/reference electrode pair, until the pH is 5.3. Cool to room temperature. Pour into a 1-liter volumetric flask, and dilute to volume with deionized distilled water. Commercially prepared TISAB may be substituted for the above.

6.2.10 Fluoride Standard Solution, 0.1 M. Oven dry some sodium fluoride (NaF) for a minimum of 2 hours at 110 °C, and store in a desiccator. Then add 4.2 g of NaF to a 1-liter volumetric flask, and add enough deionized distilled water to dissolve. Dilute to volume with deionized distilled water.

7. *Procedure*

7.1 Sampling, Sample Recovery, and Sample Preparation and Distillation. Same as Method 13A, Sections 7.1, 7.2, and 7.3, respectively, except the notes concerning chloride and sulfate interferences are not applicable.

7.2 Analysis.

7.2.1 Containers No. 1 and No. 2. Distill suitable aliquots from Containers No. 1 and No. 2. Dilute the distillate in the volumetric flasks to exactly 250 ml with deionized distilled water and mix thoroughly. Pipet a 25-ml aliquot from each of the distillate and separate beakers. Add an equal volume of TISAB, and mix. The sample should be at the same temperature as the calibration standards when measurements are made. If ambient laboratory temperature fluctuates more than ±2 °C from the temperature at which the calibration standards were measured, condition samples and standards in a constant-temperature bath before measurement. Stir the sample with a magnetic stirrer during measurement to minimize electrode response time. If the stirrer generates enough heat to change solution temperature, place a piece of temperature insulating material such as cork, between the stirrer and the beaker. Hold dilute samples (below 10^{-4}M fluoride ion content) in polyethylene beakers during measurement.

Insert the fluoride and reference electrodes into the solution. When a steady millivolt reading is obtained, record it. This may take several minutes. Determine concentration from the calibration curve. Between electrode measurements, rinse the electrode with deionized distilled water.

7.2.2 Container No. 3 (Silica Gel). Same as Method 13A, Section 7.4.2.

8. *Calibration*

Maintain a laboratory log of all calibrations.

8.1 Sampling Train. Same as Method 13A.

8.2 Fluoride Electrode. Prepare fluoride standardizing solutions by serial dilution of the 0.1 M fluoride standard solution. Pipet 10 ml of 0.1 M fluoride standard solution into a 100-ml volumetric flask, and make up to the mark with deionized distilled water for a 10^{-2}M standard solution. Use 10 ml of 10^{-2}M solution to make a 10^{-3}M solution in the same manner. Repeat the dilution procedure and make $10^{-4}$and 10^{-5}solutions.

Pipet 50 ml of each standard into a separate beaker. Add 50 ml of TISAB to each beaker. Place the electrode in the most dilute standard solution. When a steady millivolt reading is obtained, plot the value on the linear axis of semilog graph paper versus concentration on the log axis. Plot the nominal value for concentration of the standard on the log axis, e.g., when 50 ml of 10^{-2}M standard is diluted with 50 ml of TISAB, the concentration is still designated ''10^{-2}M.''

Between measurements soak the fluoride sensing electrode in deionized distilled water for 30 seconds, and then remove and blot dry. Analyze the standards going from dilute to concentrated standards. A straight-line calibration curve will be obtained, with nominal concentrations of 10^{-4}, 10^{-3}, 10^{-2}, and 10^{-1}fluoride molarity on the log axis plotted versus electrode potential (in mv) on the linear scale. Some electrodes may be slightly nonlinear between $10^{-5}$and 10^{-4}M. If this occurs, use additional standards between these two concentrations.

Calibrate the fluoride electrode daily, and check it hourly. Prepare fresh fluoride standardizing solutions daily (10^{-2}M or less). Store fluoride standardizing solutions in polyethylene or polypropylene containers.

NOTE: Certain specific ion meters have been designed specifically for fluoride electrode use and give a direct readout of fluoride ion concentration. These meters may be used in lieu of calibration curves for fluoride measurements over narrow concentration ranges. Calibrate the meter according to the manufacturer's instructions.)

9. *Calculations*

Carry out calculations, retaining at least one extra decimal figure beyond that of the acquired data. Round off figures after final calculation.

9.1 Nomenclature. Same as Method 13A, Section 9.1. In addition:

M=F concentration from calibration curve, molarity.

9.2 Average Dry Gas Meter Temperature and Average Orifice Pressure Drop, Dry Gas Volume, Volume of Water Vapor and Moisture Content, Fluoride Concentration in Stack Gas, and Isokinetic Variation and Acceptable Results. Same as Method 13A, Sections 9.2 to 9.4, 9.5.2, and 9.6, respectively.

9.3 Fluoride in Sample. Calculate the amount of F in the sample using the following:

$$F_t = K \frac{V_t}{A_t} V_d M \qquad \text{Eq. 13B-1}$$

Where:

K=19 mg/millimole.

10. *Bibliography*

1. Same as Method 13A, Citations 1 and 2 of Bibliography.

2. MacLeod, Kathryn E. and Howard L. Crist. Comparison of the SPADNS—Zirconium Lake and Specific Ion Electrode Methods of Fluoride Determination in Stack Emission Samples. Analytical Chemistry. *45:*1272–1273. 1973.

METHOD 14—DETERMINATION OF FLUORIDE EMISSIONS FROM POTROOM ROOF MONITORS FOR PRIMARY ALUMINUM PLANTS

1. *Applicability and Principle*

1.1 Applicability. This method is applicable for the determination of fluoride emissions from stationary sources only when specified by the test procedures for determining compliance with new source performance standards.

1.2 Principle. Gaseous and particulate fluoride roof monitor emissions are drawn into a permanent sampling manifold through several large nozzles. The sample is transported from the sampling manifold to ground level through a duct. The gas in the duct is sampled using Method 13A or 13B—Determination of Total Fluoride Emissions from Stationary Sources. Effluent velocity and volumetric flow rate are determined with anemometers located in the roof monitor.

2. *Apparatus*

2.1 Velocity Measurement Apparatus.

2.1.1 Anemometers. Propeller anemometers, or equivalent. Each anemometer shall meet the following specifications: (1) Its propeller shall be made of polystyrene, or similar material of uniform density. To insure uniformity of performance among propellers, it is desirable that all propellers be made from the same mold; (2) The propeller shall be properly balanced, to optimize performance; (3) When the anemometer is mounted horizontally, its threshold velocity shall not exceed 15 m/min (50 fpm); (4) The measurement range of the anemometer shall extend to at least 600 m/min (2,000 fpm); (5) The anemometer shall be able to withstand prolonged exposure to dusty and corrosive environments; one way of achieving this is to continuously purge the bearings of the anemometer with filtered air during operation; (6) All anemometer components shall be properly shielded or encased, such that the performance of the anemometer is uninfluenced by potroom magnetic field effects; (7) A known relationship shall exist between the electrical output signal from the anemometer generator and the propeller shaft rpm, at a minimum of three evenly spaced rpm settings between 60 and 1800 rpm; for the 3 settings, use 60±15, 900±100, and 1800±100 rpm. Anemometers having other types of output signals (e.g., optical) may be used, subject to the approval of the Administrator. If other types of anemometers are used, there must be a known relationship (as described above) between output signal and shaft rpm; also, each anemometer must be equipped with a suitable readout system (See Section 2.1.3).

2.1.2 Installation of Anemometers.

2.1.2.1 If the affected facility consists of a single, isolated potroom (or potroom segment), install at least one anemometer for every 85 m of roof monitor length. If the length of the roof monitor divided by 85 m is not a whole number, round the fraction to the nearest whole number to determine the number of anemometers needed. For monitors that are less than 130 m in length, use at least two anemometers. Divide the monitor cross-section into as many equal areas as anemometers and locate an anemometer at the centroid of each equal area. See exception in Section 2.1.2.3.

2.1.2.2 If the affected facility consists of two or more potrooms (or potroom segments) ducted to a common control device, install anemometers in each potroom (or segment) that contains a sampling manifold. Install at least one anemometer for every 85 m of roof monitor length of the potroom (or segment). If the potroom (or segment) length divided by 85 is not a whole number, round the fraction to the nearest whole number to determine the number of anemometers needed. If the potroom (or segment) length is less than 130 m, use at least two anemometers. Divide the potroom (or segment) monitor cross-section into as many equal areas as anemometers and locate an anemometer at the centroid of each equal area. See exception in Section 2.1.2.3.

2.1.2.3 At least one anemometer shall be installed in the immediate vicinity (i.e., within 10 m) of the center of the manifold (See Section 2.2.1). For its placement in relation to the width of the monitor, there are two alternatives. The first is to make a velocity traverse of the width of the roof monitor where an anemometer is to be placed

and install the anemometer at a point of average velocity along this traverse. The traverse may be made with any suitable low velocity measuring device, and shall be made during normal process operating conditions.

The second alternative, at the option of the tester, is to install the anemometer halfway across the width of the roof monitor. In this latter case, the velocity traverse need not be conducted.

2.1.3 Recorders. Recorders, equipped with suitable auxiliary equipment (e.g. transducers) for converting the output signal from each anemometer to a continuous recording of air flow velocity, or to an integrated measure of volumetric flowrate. A suitable recorder is one that allows the output signal from the propeller anemometer to be read to within 1 percent when the velocity is between 100 and 120 m/min (350 and 400 fpm). For the purpose of recording velocity, ''continuous'' shall mean one readout per 15-minute or shorter time interval. A constant amount of time shall elapse between readings. Volumetric flow rate may be determined by an electrical count of anemometer revolutions. The recorders or counters shall permit identification of the velocities or flowrate measured by each individual anemometer.

2.1.4 Pitot Tube. Standard-type pitot tube, as described in Section 2.7 of Method 2, and having a coefficient of 0.99±0.01.

2.1.5 Pitot Tube (Optional). Isolated, Type S pitot, as described in Section 2.1 of Method 2. The pitot tube shall have a known coefficient, determined as outlined in Section 4.1 of Method 2.

2.1.6 Differential Pressure Gauge. Inclined manometer or equivalent, as described in Section 2.1.2 of Method 2.

2.2 Roof Monitor Air Sampling System.

2.2.1 Sampling Ductwork. A minimum of one manifold system shall be installed for each potroom group (as defined in Subpart S, Section 60.191). The manifold system and connecting duct shall be permanently installed to draw an air sample from the roof monitor to ground level. A typical installation of a duct for drawing a sample from a roof monitor to ground level is shown in Figure 14–1. A plan of a manifold system that is located in a roof monitor is shown in Figure 14.2. These drawings represent a typical installation for a generalized roof monitor. The dimensions on these figures may be altered slightly to make the manifold system fit into a particular roof monitor, but the general configuration shall be followed. There shall be eight nozzles, each having a diameter of 0.40 to 0.50 m. Unless otherwise specified by the Administrator, the length of the manifold system from the first nozzle to the eighth shall be 35 m or eight percent of the length of the potroom (or potroom segment) roof monitor, whichever is greater. The duct leading from the roof monitor manifold shall be round with a diameter of 0.30 to 0.40 m. As shown in Figure 14–2, each of the sample legs of the manifold shall have a device, such as a blast gate or valve, to enable adjustment of the flow into each sample nozzle.

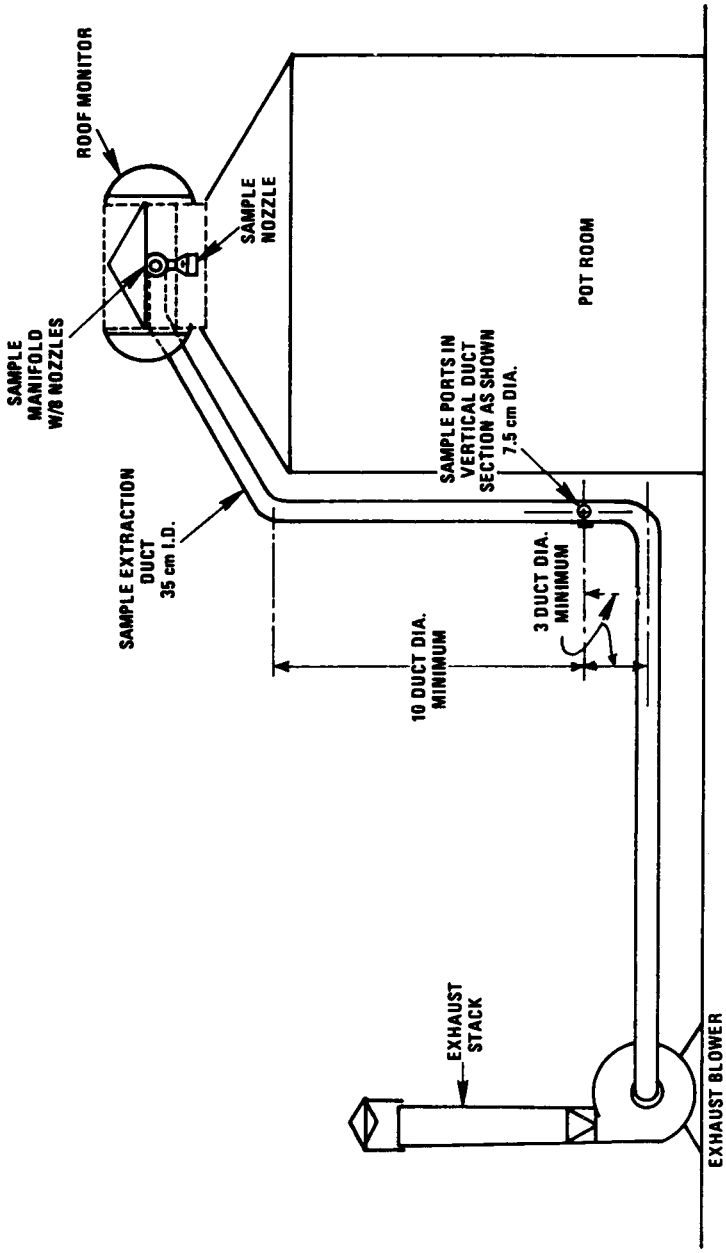

Figure 14-1. Roof monitor sampling system.

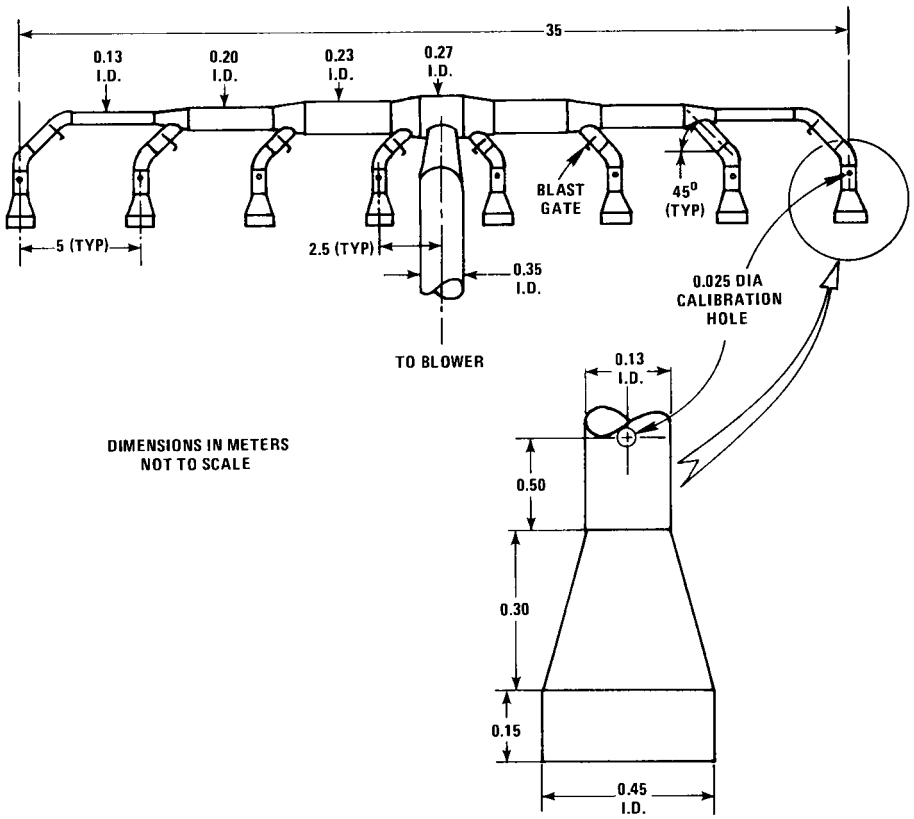

Figure 14-2. Sampling manifold and nozzles.

The manifold shall be located in the immediate vicinity of one of the propeller anemometers (see Section 2.1.2.3) and as close as possible to the midsection of the potroom (or potroom segment). Avoid locating the manifold near the end of a potroom or in a section where the aluminum reduction pot arrangement is not typical of the rest of the potroom (or potroom segment). Center the sample nozzles in the throat of the roof monitor (see Figure 14–1). Construct all sample-exposed surfaces within the nozzles, manifold and sample duct of 316 stainless steel. Aluminum may be used if a new ductwork system is conditioned with fluoride-laden roof monitor air for a period of six weeks prior to initial testing. Other materials of construction may be used if it is demonstrated through comparative testing that there is no loss of fluorides in the system. All connections in the ductwork shall be leak free.

Locate two sample ports in a vertical section of the duct between the roof monitor and exhaust fan. The sample ports shall be at least 10 duct diameters downstream and three diameters upstream from any flow disturbance such as a bend or contraction. The two sample ports shall be situated 90° apart. One of the sample ports shall be situated so that the duct can be traversed in the plane of the nearest upstream duct bend.

2.2.2 Exhaust Fan. An industrial fan or blower shall be attached to the sample duct at ground level (see Figure 14–1). This exhaust fan shall have a capacity such that a large enough volume of air can be pulled through the ductwork to maintain an isokinetic sampling rate in all the sample nozzles for all flow rates normally encountered in the roof monitor.

The exhaust fan volumetric flow rate shall be adjustable so that the roof monitor air can be drawn isokinetically into the sample

nozzles. This control of flow may be achieved by a damper on the inlet to the exhauster or by any other workable method.

2.3 Temperature Measurement Apparatus.

2.3.1 Thermocouple. Install a thermocouple in the roof monitor near the sample duct. The thermocouple shall conform to the specifications outlined in Section 2.3 of Method 2.

2.3.2 Signal Transducer. Transducer, to change the thermocouple voltage output to a temperature readout.

2.3.3 Thermocouple Wire. To reach from roof monitor to signal transducer and recorder.

2.3.4 Recorder. Suitable recorder to monitor the output from the thermocouple signal transducer.

2.4 Fluoride Sampling Train. Use the train described in Method 13A or 13B.

3. *Reagents*

3.1 Sampling and Analysis. Use reagents described in Method 13A or 13B.

4. *Calibration*

4.1 Initial Performance Checks. Conduct these checks within 60 days prior to the first performance test.

4.1.1 Propeller Anemometers. Anemometers which meet the specifications outlined in Section 2.1.1 need not be calibrated, provided that a reference performance curve relating anemometer signal output to air velocity (covering the velocity range of interest) is available from the manufacturer. For the purpose of this method, a ''reference'' performance curve is defined as one that has been derived from primary standard calibration data, with the anemometer mounted vertically. ''Primary standard'' data are obtainable by: (1) Direct calibration of one or more of the anemometers by the National Bureau of Standards (NBS); (2) NBS-traceable calibration; or (3) Calibration by direct measurement of fundamental parameters such as length and time (e.g., by moving the anemometers through still air at measured rates of speed, and recording the output signals). If a reference performance curve is not available from the manufacturer, such a curve shall be generated, using one of the three methods described as above. Conduct a performance-check as outlined in Sections 4.1.1.1 through 4.1.1.3, below. Alternatively, the tester may use any other suitable method, subject to the approval of the Administrator, that takes into account the signal output, propeller condition and threshold velocity of the anemometer.

4.1.1.1 Check the signal output of the anemometer by using an accurate rpm generator (see Figure 14–3) or synchronous motors to spin the propeller shaft at each of the three rpm settings described in Section 2.1.1 above (specification No. 7), and measuring the output signal at each setting. If, at each setting, the output signal is within ±5 percent of the manufacturer's value, the anemometer can be used. If the anemometer performance is unsatisfactory, the anemometer shall either be replaced or repaired.

4.1.1.2 Check the propeller condition, by visually inspecting the propeller, making note of any significant damage or warpage; damaged or deformed propellers shall be replaced.

4.1.1.3 Check the anemometer threshold velocity as follows: With the anemometer mounted as shown in Figure 14–4(A), fasten a known weight (a straight-pin will suffice) to the anemometer propeller at a fixed distance from the center of the propeller shaft. This will generate a known torque; for example, a 0.1 g weight, placed 10 cm from the center of the shaft, will generate a torque of 1.0 g-cm. If the known torque causes the propeller to rotate downward, approximately 90° [see Figure 14–4(B)], then the known torque is greater than or equal to the starting torque; if the propeller fails to rotate approximately 90°, the known torque is less than the starting torque. By trying different combinations of weight and distance, the starting torque of a particular anemometer can be satisfactorily estimated. Once an estimate of the starting torque has been obtained, the threshold velocity of the anemometer (for horizontal mounting) can be estimated from a graph such as Figure 14–5 (obtained from the manufacturer). If the horizontal threshold velocity is acceptable [<15 m/min (50 fpm), when this technique is used], the anemometer can be used. If the threshold velocity of an anemometer is found to be unacceptably high, the anemometer shall either be replaced or repaired.

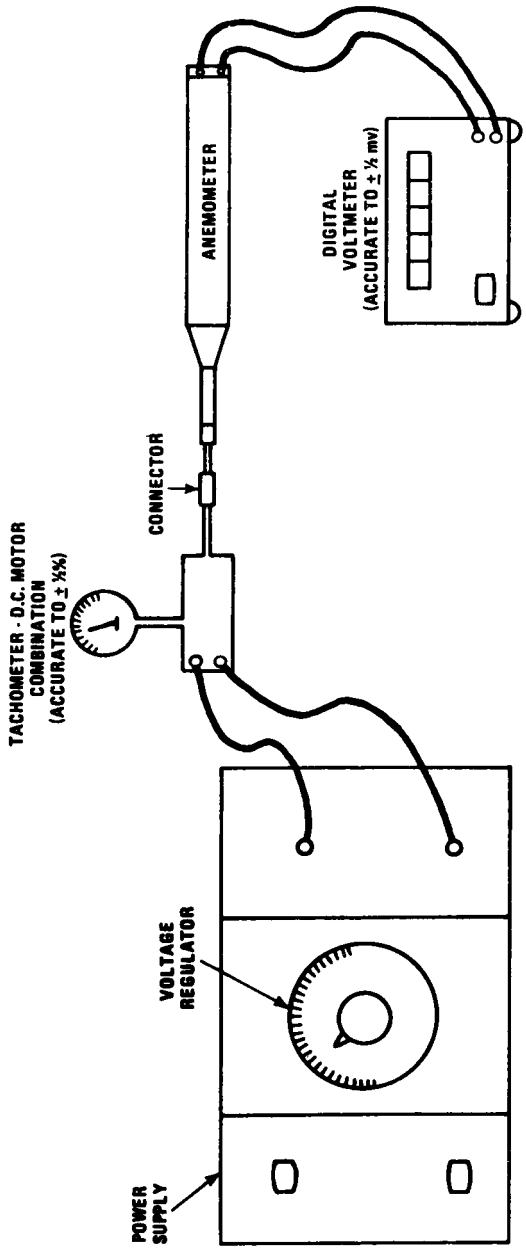

Figure 14-3. Typical RPM generator.

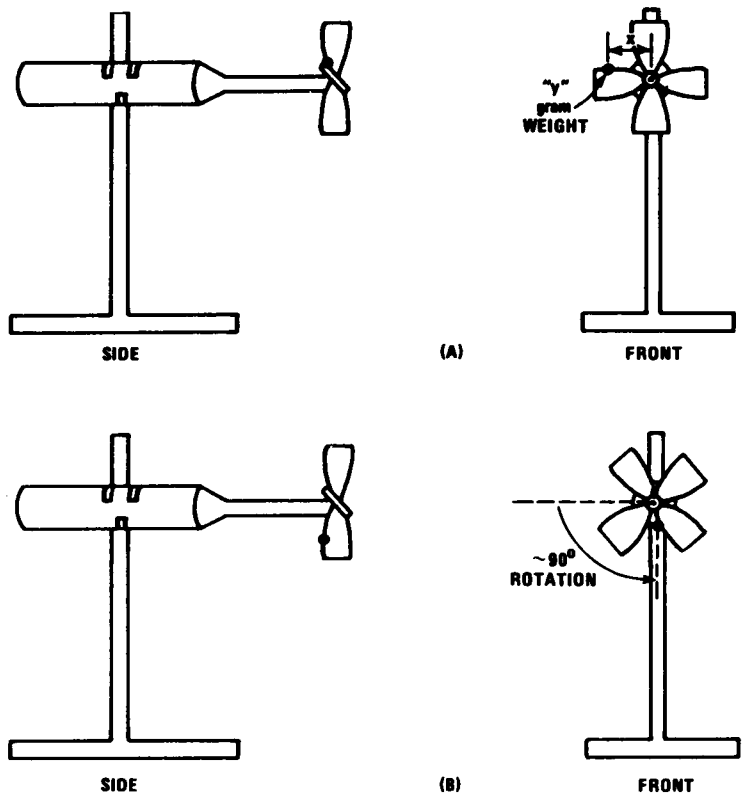

Figure 14-4. Check of anemometer starting torque. A "y" gram weight placed "x" centimeters from center of propeller shaft produces a torque of "xy" g-cm. The minimum torque which produces a 90° (approximately) rotation of the propeller is the "starting torque."

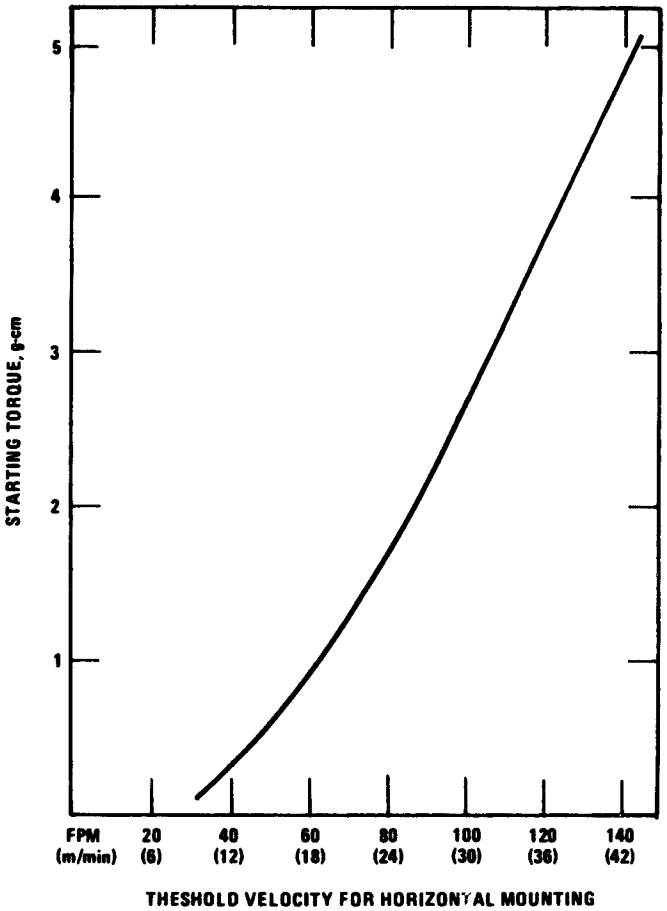

Figure 14-5. Typical curve of starting torque vs horizontal threshold velocity for propeller anemometers. Based on data obtained by R.M. Young Company, May, 1977.

4.1.2 Thermocouple. Check the calibration of the thermocouple-potentiometer system, using the procedures outlined in Section 4.3 of Method 2, at temperatures of 0, 100, and 150 °C. If the calibration is off by more than 5 °C at any of the temperatures, repair or replace the system; otherwise, the system can be used.

4.1.3 Recorders and/or Counters. Check the calibration of each recorder and/or counter (see Section 2.1.3) at a minimum of three points, approximately spanning the expected range of velocities. Use the calibration procedures recommended by the manufacturer, or other suitable procedures (subject to the approval of the Administrator). If a recorder or counter is found to be out of calibration, by an average amount greater than 5 percent for the three calibration points, replace or repair the system; otherwise, the system can be used.

4.1.4 Manifold Intake Nozzles. In order to balance the flow rates in the eight individual nozzles, proceed as follows: Adjust the exhaust fan to draw a volumetric flow rate (refer to Equation 14–1) such that the entrance velocity into each manifold nozzle approximates the average effluent velocity in the roof monitor. Measure the velocity of the air entering each nozzle by inserting a standard pitot tube into a 2.5 cm or less diameter hole (see Figure 14–2) located in the manifold

between each blast gate (or valve) and nozzle. Note that a standard pitot tube is used, rather than a type S, to eliminate possible velocity measurement errors due to cross-section blockage in the small (0.13 m diameter) manifold leg ducts. The pitot tube tip shall be positioned at the center of each manifold leg duct. Take care to insure that there is no leakage around the pitot tube, which could affect the indicated velocity in the manifold leg. If the velocity of air being drawn into each nozzle is not the same, open or close each blast gate (or valve) until the velocity in each nozzle is the same. Fasten each blast gate (or valve) so that it will remain in this position and close the pitot port holes. This calibration shall be performed when the manifold system is installed. Alternatively, the manifold may be preassembled and the flow rates balanced on the ground, before being installed.

4.2 Periodical Performance Checks. Twelve months after their initial installation, check the calibration of the propeller anemometers, thermocouple-potentiometer system, and the recorders and/or counters as in Section 4.1. If the above systems pass the performance checks, (i.e., if no repair or replacement of any component is necessary), continue with the performance checks on a 12-month interval basis. However, if any of the above systems fail the performance checks, repair or replace the system(s) that failed and conduct the periodical performance checks on a 3-month interval basis, until sufficient information (consult with the Administrator) is obtained to establish a modified performance check schedule and calculation procedure.

NOTE: If any of the above systems fail the initial performance checks, the data for the past year need not be recalculated.

5. *Procedure*

5.1 Roof Monitor Velocity Determination.

5.1.1 Velocity Estimate(s) for Setting Isokinetic Flow. To assist in setting isokinetic flow in the manifold sample nozzles, the anticipated average velocity in the section of the roof monitor containing the sampling manifold shall be estimated prior to each test run. The tester may use any convenient means to make this estimate (e.g., the velocity indicated by the anemometer in the section of the roof monitor containing the sampling manifold may be continuously monitored during the 24-hour period prior to the test run).

If there is question as to whether a single estimate of average velocity is adequate for an entire test run (e.g., if velocities are anticipated to be significantly different during different potroom operations), the tester may opt to divide the test run into two or more ''sub-runs,'' and to use a different estimated average velocity for each sub-run (see Section 5.3.2.2.)

5.1.2 Velocity Determination During a Test Run. During the actual test run, record the velocity or volumetric flowrate readings of each propeller anemometer in the roof monitor. Readings shall be taken for each anemometer every 15 minutes or at shorter equal time intervals (or continuously).

5.2 Temperature Recording. Record the temperature of the roof monitor every 2 hours during the test run.

5.3 Sampling.

5.3.1 Preliminary Air Flow in Duct. During 24 hours preceding the test, turn on the exhaust fan and draw roof monitor air through the manifold duct to condition the ductwork. Adjust the fan to draw a volumetric flow through the duct such that the velocity of gas entering the manifold nozzles approximates the average velocity of the air exiting the roof monitor in the vicinity of the sampling manifold.

5.3.2 Manifold Isokinetic Sample Rate Adjustment(s).

5.3.2.1 Initial Adjustment. Prior to the test run (or first sub-run, if applicable; see Sections 5.1.1 and 5.3.2.2), adjust the fan to provide the necessary volumetric flowrate in the sampling duct, so that air enters the manifold sample nozzles at a velocity equal to the appropriate estimated average velocity determined under Section 5.1.1. Equation 14–1 gives the correct stream velocity needed in the duct at the sampling location, in order for sample gas to be drawn isokinetically into the manifold nozzles. Next, verify that the correct stream velocity has been achieved, by performing a pitot tube traverse of the sample duct (using either a standard or type S pitot tube); use the procedure outlined in Method 2.

$$v_d = \frac{8(D_n)^2}{(D_d)^2}(v_m)\frac{1\,\text{min}}{60\,\text{sec}} \qquad \text{Eq. 14-1}$$

Where:

v_d=Desired velocity in duct at sampling location, m/sec.

D_n=Diameter of a roof monitor manifold nozzle, m.

D_d=Diameter of duct at sampling location, m.

v_m=Average velocity of the air stream in the roof monitor, m/min, as determined under Section 5.1.1.

5.3.2.2 Adjustments During Run. If the test run is divided into two or more ''sub-runs'' (see Section 5.1.1), additional isokinetic rate adjustment(s) may become necessary during the run. Any such adjustment shall be made just before the start of a sub-run, using the procedure outlined in Section 5.3.2.1 above.

NOTE: Isokinetic rate adjustments are not permissible during a sub-run.

5.3.3 Sample Train Operation. Sample the duct using the standard fluoride train and methods described in Methods 13A and 13B. Determine the number and location of the sampling points in accordance with Method 1. A single train shall be used for the entire sampling run. Alternatively, if two or more sub-runs are performed, a separate train may be used for each sub-run; note, however, that if this option is chosen, the area of the sampling nozzle shall be the same (± 2 percent) for each train. If the test run is divided into sub-runs, a complete traverse of the duct shall be performed during each sub-run.

5.3.4 Time Per Run. Each test run shall last 8 hours or more; if more than one run is to be performed, all runs shall be of approximately the same (± 10 percent) length. If question exists as to the representativeness of an 8-hour test, a longer period should be selected. Conduct each run during a period when all normal operations are performed underneath the sampling manifold. For most recently-constructed plants, 24 hours are required for all potroom operations and events to occur in the area beneath the sampling manifold. During the test period, all pots in the potroom group shall be operated such that emissions are representative of normal operating conditions in the potroom group.

5.3.5 Sample Recovery. Use the sample recovery procedure described in Method 13A or 13B.

5.4 Analysis. Use the analysis procedures described in Method 13A or 13B.

6. *Calculations*

6.1 Isokinetic Sampling Check.

6.1.1 Calculate the mean velocity (v_m) for the sampling run, as measured by the anemometer in the section of the roof monitor containing the sampling manifold. If two or more sub-runs have been performed, the tester may opt to calculate the mean velocity for each sub-run.

6.1.2 Using Equation 14–1, calculate the expected average velocity (v_d) in the sampling duct, corresponding to each value of v_m obtained under Section 6.1.1.

6.1.3 Calculate the actual average velocity (v_s) in the sampling duct for each run or sub-run, according to Equation 2–9 of Method 2, and using data obtained from Method 13.

6.1.4 Express each value v_s from Section 6.1.3 as a percentage of the corresponding v_d value from Section 6.1.2.

6.1.4.1 If v_s is less than or equal to 120 percent of v_d, the results are acceptable (note that in cases where the above calculations have been performed for each sub-run, the results are acceptable if the average percentage for all sub-runs is less than or equal to 120 percent).

6.1.4.2 If v_s is more than 120 percent of v_d, multiply the reported emission rate by the following factor.

$$1+\frac{(100\ v_s / v_d)-120}{200}$$

6.2 Average Velocity of Roof Monitor Gases. Calculate the average roof monitor velocity using all the velocity or volumetric flow readings from Section 5.1.2.

6.3 Roof Monitor Temperature. Calculate the mean value of the temperatures recorded in Section 5.2.

6.4 Concentration of Fluorides in Roof Monitor Air.

6.4.1 If a single sampling train was used throughout the run, calculate the average fluoride concentration for the roof monitor using Equation 13A–2 of Method 13A.

6.4.2 If two or more sampling trains were used (i.e., one per sub-run), calculate the average fluoride concentration for the run, as follows:

$$\bar{C}_S = \frac{\sum_{i=1}^{n} (F_t)_i}{\sum_{i=1}^{n} \left(V_{m(std)}\right)_i} \qquad \text{Eq. 14-2}$$

Where:

C_s=Average fluoride concentration in roof monitor air, mg F/dscm (mg F/dscf).

F_t=Total fluoride mass collected during a particular sub-run, mg F (from Equation 13A–1 of Method 13A or Equation 13B–1 of Method 13B).

$V_{m(std)}$=Total volume of sample gas passing through the dry gas meter during a particular sub-run, dscm (dscf) (see Equation 5–1 of Method 5).

n=Total number of sub-runs.

6.5 Average volumetric flow from the roof monitor of the potroom(s) (or potroom segment(s)) containing the anemometers is given in Equation 14–3.

$$Q_{sd} = \frac{V_{mt} M_d P_m \left(293^{o}K\right) A}{\left(t_m + 273^{o}\right)\left(760\ \text{mm Hg}\right)} \qquad \text{Eq. 14-3}$$

Where:

Q_{sd}=Average volumetric flow from roof monitor at standard conditions on a dry basis, m^3/min.

A=Roof monitor open area, m^2.

v_{mt}=Average velocity of air in the roof monitor, m/min, from Section 6.2.

P_m=Pressure in the roof monitor; equal to barometric pressure for this application, mm Hg.

t_m=Roof monitor temperature, °C, from Section 6.3.

M_d=Mole fraction of dry gas, which is given by:

$M_d=(1-B_{ws})$

NOTE: B_{ws} is the proportion by volume of water vapor in the gas stream, from Equation 5–3, Method 5.

6.6 Conversion Factors.

1 ft^3=0.02832 m^3

1 hr=60 min

7. *Bibliography*

1. Shigehara, R. T., A Guideline for Evaluating Compliance Test Results (Isokinetic Sampling Rate Criterion). U.S. Environmental Protection Agency, Emission Measurement Branch. Research Triangle Park, NC. August 1977.

METHOD 14A—DETERMINATION OF TOTAL FLUORIDE EMISSIONS FROM SELECTED SOURCES AT PRIMARY ALUMINUM PRODUCTION FACILITIES

NOTE: This method does not include all the specifications (e.g., equipment and supplies) and procedures (e.g., sampling) essential to its performance. Some material is incorporated by reference from other methods in this part. Therefore, to obtain reliable results, persons using this method should have a thorough knowledge of at least the following additional test methods: Method 5, Methods 13A and 13B, and Method 14 of this appendix.

1.0 *Scope and Application*

1.1 Analytes.

Analyte	CAS No.	Sensitivity
Total fluorides	None assigned	Not determined.
Includes hydrogen fluoride.	007664–39–3	Not determined.

1.2 Applicability. This method is applicable for the determination of total fluorides (TF) emissions from sources specified in the applicable regulation. This method was developed by consensus with the Aluminum Association and the U.S. Environmental Protection Agency (EPA).

2.0 *Summary of Method*

2.1 Total fluorides, in the form of solid and gaseous fluorides, are withdrawn from the ascending air stream inside of an aluminum reduction potroom and, prior to exiting the potroom roof monitor, into a specific cassette arrangement. The cassettes are connected by tubing to flowmeters and a manifold system that allows for the equal distribution of volume pulled through each cassette, and finally to a dry gas meter. The cassettes have a specific internal arrangement of one unaltered cellulose filter and support pad in the first section of the cassette for solid fluoride retention and two cellulose filters with support pads that are impregnated with sodium formate for the chemical absorption of gaseous fluorides in the following two sections of the cassette. A minimum of eight cassettes shall be used for a potline and shall be strategically located at equal intervals across the potroom roof so as to encompass a minimum of 8 percent of the total length of the potroom. A greater number of cassettes may be used should the regulated facility choose to do so. The mass flow rate of pollutants is determined with anemometers and temperature sensing devices located immediately below the opening of the roof monitor and spaced evenly within the cassette group.

3.0 *Definitions*

3.1 Cassette. A segmented, styrene acrylonitrile cassette configuration with three separate segments and a base, for the purpose of this method, to capture and retain fluoride from potroom gases.

3.2 Cassette arrangement. The cassettes, tubing, manifold system, flowmeters, dry gas meter, and any other related equipment associated with the actual extraction of the sample gas stream.

3.3 Cassette group. That section of the potroom roof monitor where a distinct group of cassettes is located.

3.4 Potline. A single, discrete group of electrolytic reduction cells electrically connected in series, in which alumina is reduced to form aluminum.

3.5 Potroom. A building unit that houses a group of electrolytic reduction cells in which aluminum is produced.

3.6 Potroom group. An uncontrolled potroom, a potroom that is controlled individually, or a group of potrooms or potroom segments ducted to a common primary control system.

3.7 Primary control system. The equipment used to capture the gases and particulate matter generated during the reduction process and the emission control device(s) used to remove pollutants prior to discharge of the cleaned gas to the atmosphere.

3.8 Roof monitor. That portion of the roof of a potroom building where gases, not captured at the cell, exit from the potroom.

3.9 Total fluorides (TF). Elemental fluorine and all fluoride compounds as measured by Methods 13A or 13B of this appendix or by an approved alternative method.

4.0 *Interferences and Known Limitations*

4.1 There are two principal categories of limitations that must be addressed when

using this method. The first category is sampling bias and the second is analytical bias. Biases in sampling can occur when there is an insufficient number of cassettes located along the roof monitor of a potroom or if the distribution of those cassettes is spatially unequal. Known sampling biases also can occur when there are leaks within the cassette arrangement and if anemometers and temperature devices are not providing accurate data. Applicable instruments must be properly calibrated to avoid sampling bias. Analytical biases can occur when instrumentation is not calibrated or fails calibration and the instrument is used out of proper calibration. Additionally, biases can occur in the laboratory if fusion crucibles retain residual fluorides over lengthy periods of use. This condition could result in falsely elevated fluoride values. Maintaining a clean work environment in the laboratory is crucial to producing accurate values.

4.2 Biases during sampling can be avoided by properly spacing the appropriate number of cassettes along the roof monitor, conducting leak checks of the cassette arrangement, calibrating the dry gas meter every 30 days, verifying the accuracy of individual flowmeters (so that there is no more than 5 percent difference in the volume pulled between any two flowmeters), and calibrating or replacing anemometers and temperature sensing devices as necessary to maintain true data generation.

4.3 Analytical biases can be avoided by calibrating instruments according to the manufacturer's specifications prior to conducting any analyses, by performing internal and external audits of up to 10 percent of all samples analyzed, and by rotating individual crucibles as the ''blank'' crucible to detect any potential residual fluoride carry-over to samples. Should any contamination be discovered in the blank crucible, the crucible shall be thoroughly cleaned to remove any detected residual fluorides and a ''blank'' analysis conducted again to evaluate the effectiveness of the cleaning. The crucible shall remain in service as long as no detectable residual fluorides are present.

5.0 *Safety*

5.1 This method may involve the handling of hazardous materials in the analytical phase. This method does not purport to address all of the potential safety hazards associated with its use. It is the responsibility of the user to establish appropriate safety and health practices and determine the applicability of regulatory limitations prior to performing this test method.

5.2 Corrosive reagents. The following reagents are hazardous. Personal protective equipment and safe procedures are useful in preventing chemical splashes. If contact occurs, immediately flush with copious amounts of water for at least 15 minutes. Remove clothing under shower and decontaminate. Treat residual chemical burn as thermal burn.

5.3 Sodium Hydroxide (NaOH). Causes severe damage to eyes and skin. Inhalation causes irritation to nose, throat, and lungs. Reacts exothermically with limited amounts of water.

5.4 Perchloric Acid ($HClO_4$). Corrosive to eyes, skin, nose, and throat. Provide ventilation to limit exposure. Very strong oxidizer. Keep separate from water and oxidizable materials to prevent vigorous evolution of heat, spontaneous combustion, or explosion. Heat solutions containing HClO4 only in hoods specifically designed for $HClO_4$.

6.0 *Equipment and Supplies*

6.1 Sampling.

6.1.1 Cassette arrangement. The cassette itself is a three-piece, styrene acrylonitrile cassette unit (a Gelman Sciences product), 37 millimeter (mm), with plastic connectors. In the first section (the intake section), an untreated Gelman Sciences 37 mm, 0.8 micrometer (µm) DM–800 metricel membrane filter and cellulose support pad, or equivalent, is situated. In the second and third segments of the cassette there is placed one each of Gelman Sciences 37 mm, 5 µm GLA–5000 low-ash PVC filter with a cellulose support pad or equivalent product. Each of these two filters and support pads shall have been immersed in a solution of 10 percent sodium formate (volume/volume in an ethyl alcohol solution). The impregnated pads shall be placed in the cassette segments while still wet and heated at 50 °C (122 °F) until the pad is completely dry. It is important to check for a proper fit of the filter and support pad to the cassette segment to ensure that there are no areas where gases could bypass the filter. Once all of the cassette segments have been prepared, the cassette shall be assembled and a plastic plug shall be inserted into the exhaust hole of the cassette. Prior to placing the cassette into service, the space between each segment shall be taped with an appropriately durable tape to prevent the infiltration of gases through the points of connection, and an aluminum nozzle shall be inserted into the intake hole of the cassette. The aluminum nozzle shall have a short section of tubing placed over the opening of the nozzle, with the tubing plugged to prevent dust from entering the nozzle and to prepare the nozzle for the cassette arrangement leak check. An alternate nozzle type can be used if historical results or scientific demonstration of applicability can be shown.

6.1.2 Anemometers and temperature sensing devices. To calculate the mass flow rate of TF from the roof monitor under standard conditions, anemometers that meet the specifications in section 2.1.1 in Method 14 of this appendix or an equivalent device yielding

equivalent information shall be used. A recording mechanism capable of accurately recording the exit gas temperature at least every 2 hours shall be used.

6.1.3 Barometer. To correct the volumetric flow from the potline roof monitor to standard conditions, a mercury (Hg), aneroid, or other barometer capable of measuring atmospheric pressure to within 2.5 mm [0.1 inch (in)] Hg shall be used.

NOTE: The barometric reading may be obtained from a nearby National Weather Service Station. In this case, the station value (which is absolute barometric pressure) shall be requested and an adjustment for elevation differences between the weather station and the sampling point shall be made at a rate of minus 2.5 mm (0.1 in) Hg per 30 meters (m) [100 feet (ft)] elevation increase or plus 2.5 mm (0.1 in) Hg per 30 m (100 ft) elevation decrease.

6.2 Sample recovery.

6.2.1 Hot plate.

6.2.2 Muffle furnace.

6.2.3 Nickel crucible.

6.2.4 Stirring rod. Teflon'.

6.2.5 Volumetric flask. 50-milliliter (ml).

6.2.6 Plastic vial. 50-ml.

6.3 Analysis.

6.3.1 Primary analytical method. An automated analyzer having the following components or equivalent: a multichannel proportioning pump, multiposition sampler, voltage stabilizer, colorimeter, instrument recording device, microdistillation apparatus, flexible Teflon® heating bath, vacuum pump, pulse suppressers and an air flow system.

6.3.2 Secondary analytical method. Specific Ion Electrode (SIE).

7.0 *Reagents and Standards*

7.1 Water. Deionized distilled to conform to ASTM Specification D 1193–77, Type 3 (incorporated by reference in §60.17(a)(22) of this part). The $KMnO_4$ test for oxidizable organic matter may be omitted when high concentrations of organic matter are not expected to be present.

7.2 Calcium oxide.

7.3 Sodium hydroxide (NaOH). Pellets.

7.4 Perchloric acid ($HClO_4$). Mix 1:1 with water. Sulfuric acid (H_2SO_4) may be used in place of $HClO_4$.

7.5 Audit samples. The audit samples discussed in section 9.1 shall be prepared from reagent grade, water soluble stock reagents, or purchased as an aqueous solution from a commercial supplier. If the audit stock solution is purchased from a commercial supplier, the standard solution must be accompanied by a certificate of analysis or an equivalent proof of fluoride concentration.

8.0 *Sample Collection and Analysis*

8.1 Preparing cassette arrangement for sampling. The cassettes are initially connected to flexible tubing. The tubing is connected to flowmeters and a manifold system. The manifold system is connected to a dry gas meter (Research Appliance Company model 201009 or equivalent). The length of tubing is managed by pneumatically or electrically operated hoists located in the roof monitor, and the travel of the tubing is controlled by encasing the tubing in aluminum conduit. The tubing is lowered for cassette insertion by operating a control box at floor level. Once the cassette has been securely inserted into the tubing and the leak check performed, the tubing and cassette are raised to the roof monitor level using the floor level control box. Arrangements similar to the one described are acceptable if the scientific sample collection principles are followed.

8.2 Test run sampling period. A test run shall comprise a minimum of a 24-hour sampling event encompassing at least eight cassettes per potline (or four cassettes per potroom group). Monthly compliance shall be based on three test runs during the month. Test runs of greater than 24 hours are allowed; however, three such runs shall be conducted during the month.

8.3 Leak-check procedures.

8.3.1 Pretest leak check. A pretest leak-check is recommended; however, it is not required. To perform a pretest leak-check after the cassettes have been inserted into the tubing, isolate the cassette to be leak-checked by turning the valves on the manifold to stop all flows to the other sampling points connected to the manifold and meter. The cassette, with the plugged tubing section securing the intake of the nozzle, is subjected to the highest vacuum expected during the run. If no leaks are detected, the tubing plug can be briefly removed as the dry gas meter is rapidly turned off.

8.3.2 Post-test leak check. A leak check is required at the conclusion of each test run for each cassette. The leak check shall be performed in accordance with the procedure outlined in section 8.3.1 of this method except that it shall be performed at a vacuum greater than the maximum vacuum reached during the test run. If the leakage rate is found to be no greater than 4 percent of the average sampling rate, the results are acceptable. If the leakage rate is greater than 4 percent of the average sampling rate, either record the leakage rate and correct the sampling volume as discussed in section 12.4 of this method or void the test run if the minimum number of cassettes were used. If the number of cassettes used was greater than the minimum required, discard the leaking cassette and use the remaining cassettes for the emission determination.

8.3.3 Anemometers and temperature sensing device placement. Install the recording mechanism to record the exit gas temperature. Anemometers shall be installed as required in section 6.1.2 of Method 14 of this appendix, except replace the word ''manifold'' with ''cassette group'' in section 6.1.2.3.

These two different instruments shall be located near each other along the roof monitor. See conceptual configurations in Figures 14A–1, 14A–2, and 14A–3 of this method. Fewer temperature devices than anemometers may be used if at least one temperature device is located within the span of the cassette group. Other anemometer location siting scenarios may be acceptable as long as the exit velocity of the roof monitor gases is representative of the entire section of the potline being sampled.

8.4 Sampling. The actual sample run shall begin with the removal of the tubing and plug from the cassette nozzle. Each cassette is then raised to the roof monitor area, the dry gas meter is turned on, and the flowmeters are set to the calibration point, which allows an equal volume of sampled gas to enter each cassette. The dry gas meter shall be set to a range suitable for the specific potroom type being sampled that will yield valid data known from previous experience or a range determined by the use of the calculation in section 12 of this method. Parameters related to the test run that shall be recorded, either during the test run or after the test run if recording devices are used, include: anemometer data, roof monitor exit gas temperature, dry gas meter temperature, dry gas meter volume, and barometric pressure. At the conclusion of the test run, the cassettes shall be lowered, the dry gas meter turned off, and the volume registered on the dry gas meter recorded. The post-test leak check procedures described in section 8.3.2 of this method shall be performed. All data relevant to the test shall be recorded on a field data sheet and maintained on file.

8.5 Sample recovery.

8.5.1 The cassettes shall be brought to the laboratory with the intake nozzle contents protected with the section of plugged tubing previously described. The exterior of cassettes shall carefully be wiped free of any dust or debris, making sure that any falling dust or debris does not present a potential laboratory contamination problem.

8.5.2 Carefully remove all tape from the cassettes and remove the initial filter, support pad, and all loose solids from the first (intake) section of the cassette. Fold the filter and support pad several times and, along with all loose solids removed from the interior of the first section of the cassette, place them into a nickel crucible. Using water, wash the interior of the nozzle into the same nickel crucible. Add 0.1 gram (g) [±0.1 milligram (mg)] of calcium oxide and a sufficient amount of water to make a loose slurry. Mix the contents of the crucible thoroughly with a Teflon'' stirring rod. After rinsing any adhering residue from the stirring rod back into the crucible, place the crucible on a hot plate or in a muffle furnace until all liquid is evaporated and allow the mixture to gradually char for 1 hour.

8.5.3 Transfer the crucible to a cold muffle furnace and ash at 600 °C (1,112 °F). Remove the crucible after the ashing phase and, after the crucible cools, add 3.0 g (±0.1 g) of NaOH pellets. Place this mixture in a muffle furnace at 600 °C (1,112 °F) for 3 minutes. Remove the crucible and roll the melt so as to reach all of the ash with the molten NaOH. Let the melt cool to room temperature. Add 10 to 15 ml of water to the crucible and place it on a hot plate at a low temperature setting until the melt is soft or suspended. Transfer the contents of the crucible to a 50-ml volumetric flask. Rinse the crucible with 20 ml of 1:1 perchloric acid or 20 ml of 1:1 sulfuric acid in two (2) 10 ml portions. Pour the acid rinse slowly into the volumetric flask and swirl the flask after each addition. Cool to room temperature. The product of this procedure is particulate fluorides.

8.5.4 Gaseous fluorides can be isolated for analysis by folding the gaseous fluoride filters and support pads to approximately ¼ of their original size and placing them in a 50-ml plastic vial. To the vial add exactly 10 ml of water and leach the sample for a minimum of 1 hour. The leachate from this process yields the gaseous fluorides for analysis.

9.0 *Quality Control*

9.1 Laboratory auditing. Laboratory audits of specific and known concentrations of fluoride shall be submitted to the laboratory with each group of samples submitted for analysis. An auditor shall prepare and present the audit samples as a ''blind'' evaluation of laboratory performance with each group of samples submitted to the laboratory. The audits shall be prepared to represent concentrations of fluoride that could be expected to be in the low, medium and high range of actual results. Average recoveries of all three audits must equal 90 to 110 percent for acceptable results; otherwise, the laboratory must investigate procedures and instruments for potential problems.

NOTE: The analytical procedure allows for the analysis of individual or combined filters and pads from the cassettes provided that equal volumes (±10 percent) are sampled through each cassette.

10.0 *Calibrations*

10.1 Equipment evaluations. To ensure the integrity of this method, periodic calibrations and equipment replacements are necessary.

10.1.1 Metering system. At 30-day intervals the metering system shall be calibrated. Connect the metering system inlet to the outlet of a wet test meter that is accurate to 1 percent. Refer to Figure 5–4 of Method 5 of this appendix. The wet-test meter shall have a capacity of 30 liters/revolution [1 cubic foot (ft^3)/revolution]. A spirometer of 400 liters (14 ft^3) or more capacity, or equivalent, may be used for calibration; however, a wet-test meter is usually more practical. The wet-test meter shall be periodically tested with a

spirometer or a liquid displacement meter to ensure the accuracy. Spirometers or wet-test meters of other sizes may be used, provided that the specified accuracies of the procedure are maintained. Run the metering system pump for about 15 min. with the orifice manometer indicating a median reading as expected in field use to allow the pump to warm up and to thoroughly wet the interior of the wet-test meter. Then, at each of a minimum of three orifice manometer settings, pass an exact quantity of gas through the wet-test meter and record the volume indicated by the dry gas meter. Also record the barometric pressure, the temperatures of the wet test meter, the inlet temperatures of the dry gas meter, and the temperatures of the outlet of the dry gas meter. Record all calibration data on a form similar to the one shown in Figure 5–5 of Method 5 of this appendix and calculate Y, the dry gas meter calibration factor, and $\Delta H@$, the orifice calibration factor at each orifice setting. Allowable tolerances for Y and $\Delta H@$ are given in Figure 5–6 of Method 5 of this appendix.

10.1.2 Estimating volumes for initial test runs. For a facility's initial test runs, the regulated facility must have a target or desired volume of gases to be sampled and a target range of volumes to use during the calibration of the dry gas meter. Use Equations 14A–1 and 14A–2 in section 12 of this method to derive the target dry gas meter volume (F_v) for these purposes.

10.1.3 Calibration of anemometers and temperature sensing devices. If the standard anemometers in Method 14 of this appendix are used, the calibration and integrity evaluations in sections 10.3.1.1 through 10.3.1.3 of Method 14 of this appendix shall be used as well as the recording device described in section 2.1.3 of Method 14. The calibrations or complete change-outs of anemometers shall take place at a minimum of once per year. The temperature sensing and recording devices shall be calibrated according to the manufacturer's specifications.

10.1.4 Calibration of flowmeters. The calibration of flowmeters is necessary to ensure that an equal volume of sampled gas is entering each of the individual cassettes and that no large differences, which could possibly bias the sample, exist between the cassettes.

10.1.4.1 Variable area, 65 mm flowmeters or equivalent shall be used. These flowmeters can be mounted on a common base for convenience. These flowmeters shall be calibrated by attaching a prepared cassette, complete with filters and pads, to the flowmeter and then to the system manifold. This manifold is an aluminum cylinder with valved inlets for connections to the flowmeters/cassettes and one outlet to a dry gas meter. The connection is then made to the wet-test meter and finally to a dry gas meter. All connections are made with tubing.

10.1.4.2 Turn the dry gas meter on for 15 min. in preparation for the calibration. Turn the dry gas meter off and plug the intake hole of the cassette. Turn the dry gas meter back on to evaluate the entire system for leaks. If the dry gas meter shows a leakage rate of less than 0.02 ft^3/min at 10 in. of Hg vacuum as noted on the dry gas meter, the system is acceptable to further calibration.

10.1.4.3 With the dry gas meter turned on and the flow indicator ball at a selected flow rate, record the exact amount of gas pulled through the flowmeter by taking measurements from the wet test meter after exactly 10 min. Record the room temperature and barometric pressure. Conduct this test for all flowmeters in the system with all flowmeters set at the same indicator ball reading. When all flowmeters have gone through the procedure above, correct the volume pulled through each flowmeter to standard conditions. The acceptable difference between the highest and lowest flowmeter rate is 5 percent. Should one or more flowmeters be outside of the acceptable limit of 5 percent, repeat the calibration procedure at a lower or higher indicator ball reading until all flowmeters show no more than 5 percent difference among them.

10.1.4.4 This flowmeter calibration shall be conducted at least once per year.

10.1.5 Miscellaneous equipment calibrations. Miscellaneous equipment used such as an automatic recorder/ printer used to measure dry gas meter temperatures shall be calibrated according to the manufacturer's specifications in order to maintain the accuracy of the equipment.

11.0 Analytical Procedure

11.1 The preferred primary analytical determination of the individual isolated samples or the combined particulate and gaseous samples shall be performed by an automated methodology. The analytical method for this technology shall be based on the manufacturer's instructions for equipment operation and shall also include the analysis of five standards with concentrations in the expected range of the actual samples. The results of the analysis of the five standards shall have a coefficient of correlation of at least 0.99. A check standard shall be analyzed as the last sample of the group to determine if instrument drift has occurred. The acceptable result for the check standard is 95 to 105 percent of the standard's true value.

11.2 The secondary analytical method shall be by specific ion electrode if the samples are distilled or if a TISAB IV buffer is used to eliminate aluminum interferences. Five standards with concentrations in the expected range of the actual samples shall be analyzed, and a coefficient of correlation of at least 0.99 is the minimum acceptable limit for linearity. An exception for this limit for

linearity is a condition when low-level standards in the range of 0.01 to 0.48 μg fluoride/ml are analyzed. In this situation, a minimum coefficient of correlation of 0.97 is required. TISAB II shall be used for low-level analyses.

12.0 *Data Analysis and Calculations*

12.1 Carry out calculations, retaining at least one extra decimal point beyond that of the acquired data. Round off values after the final calculation. Other forms of calculations may be used as long as they give equivalent results.

12.2 Estimating volumes for initial test runs.

$$F_v = \frac{(F_d)(X)}{F_e} \qquad \text{Eq. 14A-1}$$

Where

F_v = Desired volume of dry gas to be sampled, ft^3.

F_d = Desired or analytically optimum mass of TF per cassette, micrograms of TF per cassette (μg/cassette).

X = Number of cassettes used.

F_e = Typical concentration of TF in emissions to be sampled, μg/ft^3, calculated from Equation 14A–2.

$$F_e = \frac{(R_e)(R_p)(4.536 \times 10^8 \mu g/lb)}{(A_r)(V_r)} \qquad \text{Eq. 14A-2}$$

Where

R_e = Typical emission rate from the facility, pounds of TF per ton (lb/ton) of aluminum.

R_p = Typical production rate of the facility, tons of aluminum per minute (ton/min).

V_r = Typical exit velocity of the roof monitor gases, feet per minute (ft/min).

A_r=Open area of the roof monitor, square feet (ft^2).

12.2.1 Example calculation. Assume that the typical emission rate (R_e) is 1.0 lb TF/ton of aluminum, the typical roof vent gas exit velocity (V_r) is 250 ft/min, the typical production rate (R_p) is 0.10 ton/min, the known open area for the roof monitor (A_r) is 8,700 ft^2, and the desired (analytically optimum) mass of TF per cassette is 1,500 μg. First calculate the concentration of TF per cassette (F_e) in μg/ft^3 using Equation 14A–2. Then calculate the desired volume of gas to be sampled (F_v) using Equation 14A–1.

$$F_e = 20.855 = \frac{(1.0 \text{ lb/ton})(0.1 \text{ tons/min})(4.536 \times 10^8 \ \mu g/lb)}{(8{,}700 \text{ ft}^2)(250 \text{ ft/min})} \qquad \text{Eq. 14A-3}$$

$$F_v = 575.40 \text{ ft}^3 = \frac{(1{,}500 \ \mu g)(8 \text{ cassettes})}{(20.855 \ \mu g/\text{ft}^3)} \qquad \text{Eq. 14A-4}$$

This is a total of 575.40 ft^3 for eight cassettes or 71.925 ft^3/cassette.

12.3 Calculations of TF emissions from field and laboratory data that would yield a production related emission rate can be calculated as follows:

12.3.1 Obtain a standard cubic feet (scf) value for the volume pulled through the dry gas meter for all cassettes by using the field and calibration data and Equation 5–1 of Method 5 of this appendix.

12.3.2 Derive the average quantity of TF per cassette (in μg TF/cassette) by adding all

laboratory data for all cassettes and dividing this value by the total number of cassettes used. Divide this average TF value by the corrected dry gas meter volume for each cassette; this value then becomes TF_{std} (μg/ft³).

12.3.3 Calculate the production-based emission rate (R_e) in lb/ton using Equation 14A–5.

$$R_e = \frac{(TF_{std})(V_r)(A_r)(2.2 \times 10^{-9}\ \text{lb/}\mu\text{g})}{(R_p)} \qquad \text{Eq. 14A-5}$$

12.3.4 As an example calculation, assume eight cassettes located in a potline were used to sample for 72 hours during the run. The analysis of all eight cassettes yielded a total of 3,000 μg of TF. The dry gas meter volume was corrected to yield a total of 75 scf per cassette, which yields a value for TF_{std} of 3,000/75=5 μg/ft³. The open area of the roof monitor for the potline (A_r) is 17,400 ft². The exit velocity of the roof monitor gases (V_r) is 250 ft/min. The production rate of aluminum over the previous 720 hours was 5,000 tons, which is 6.94 tons/hr or 0.116 ton/min (R_p). Substituting these values into Equation 14A–5 yields:

$$R_e = \frac{(5\ \mu\text{g/ft}^3)(250\ \text{ft/min})(17{,}400\ \text{ft}^2)(2.2 \times 10^{-9}\ \text{lb/}\mu\text{g})}{(0.116\ \text{ton/min})} \qquad \text{Eq. 14A-6}$$

$$R_e = 0.41\ \text{lb/ton of aluminum produced.} \qquad \text{Eq. 14A-7}$$

12.4 Corrections to volumes due to leakage. Should the post-test leak check leakage rate exceed 4 percent as described in section 8.3.2 of this method, correct the volume as detailed in Case I in section 6.3 of Method 5 of this appendix.

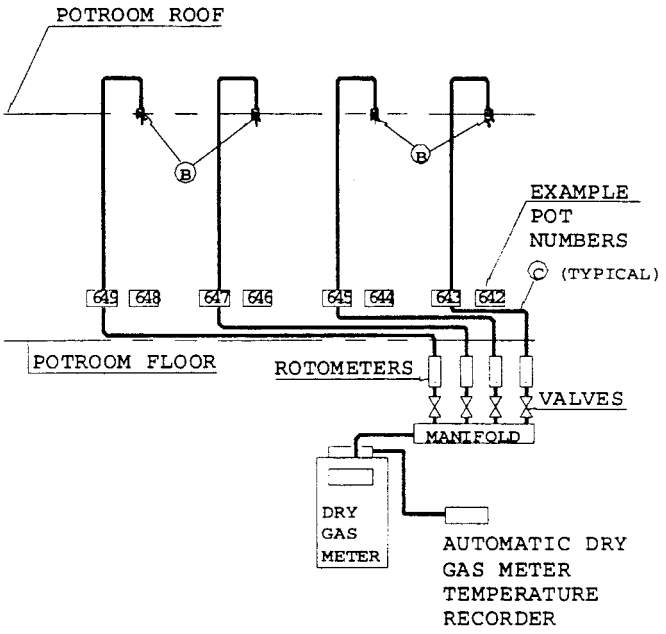

Ⓑ ALCAN CASSETTE EXAMPLE METHOD SAMPLING POINTS
Ⓒ POLYETHYLENE TUBING ENCLOSED IN CONDUIT

Figure 14A-1. Conceptual side view of arrangement of 4 cassettes for one-half of a potroom.

Note: This drawing does not reflect an equally acceptable arrangement of 8 cassettes in a cassette group located along at least 8 percent of the potroom roof.

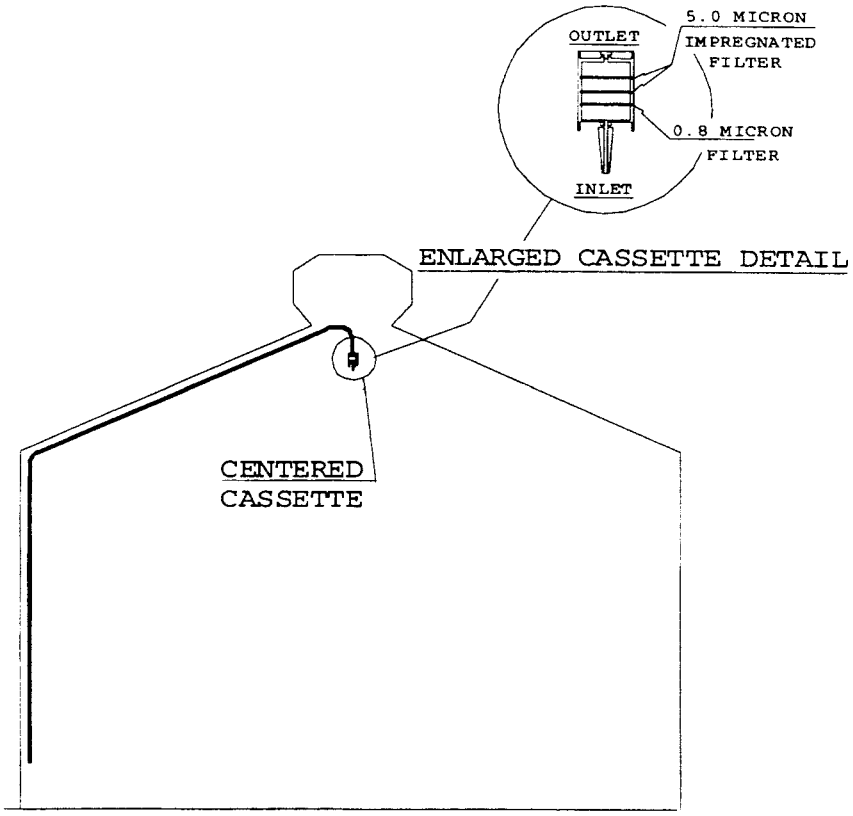

Figure 14A-2. Conceptual end view of cassette placement in a potroom roof.

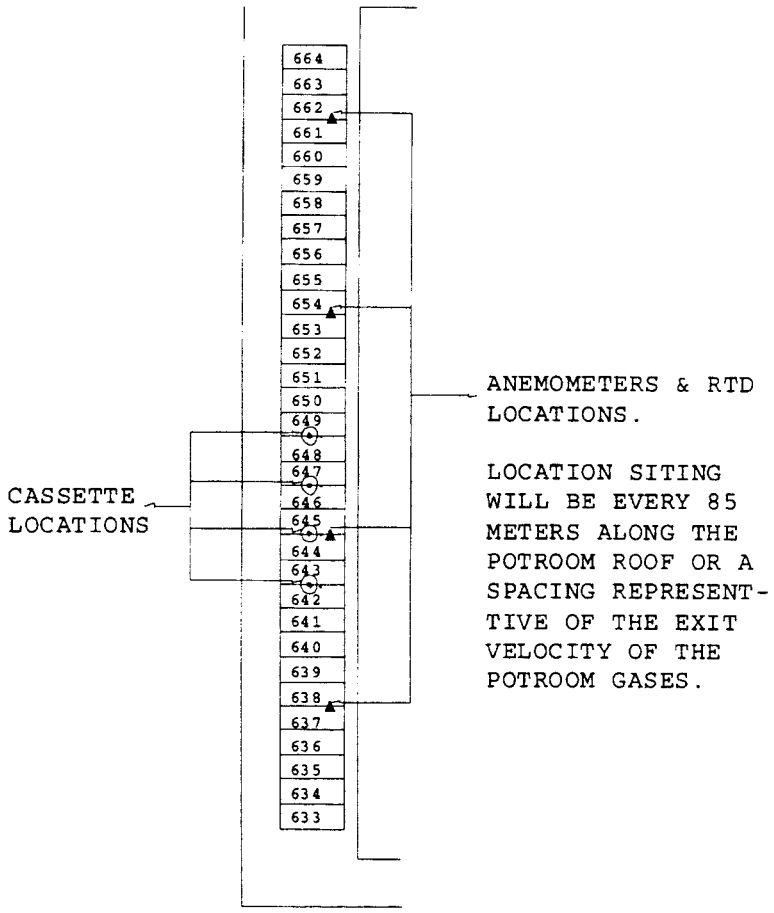

Figure 14A-3. Conceptual side view of positions of cassettes, anemometers, and RTDs in a typical half of a potroom.

Note: This drawing does not reflect other potentially acceptable arrangements.

METHOD 15—DETERMINATION OF HYDROGEN SULFIDE, CARBONYL SULFIDE, AND CARBON DISULFIDE EMISSIONS FROM STATIONARY SOURCES

Introduction

The method described below uses the principle of gas chromatographic separation and flame photometric detection (FPD). Since there are many systems or sets of operating conditions that represent useable methods of determining sulfur emissions, all systems which employ this principle, but differ only in details of equipment and operation, may be used as alternative methods, provided that the calibration precision and sample-line loss criteria are met.

1. *Principle and Applicability*

1.1 Principle. A gas sample is extracted from the emission source and diluted with clean dry air. An aliquot of the diluted sample is then analyzed for hydrogen sulfide (H_2S), carbonyl sulfide (COS), and carbon disulfide (CS_2) by gas chromatographic (GC) separation and flame photometric detection (FPD).

1.2 Applicability. This method is applicable for determination of the above sulfur compounds from tail gas control units of sulfur recovery plants.

2. *Range and Sensitivity*

2.1 Range. Coupled with a gas chromtographic system utilizing a 1-milliliter sample size, the maximum limit of the FPD for each sulfur compound is approximately 10 ppm. It may be necessary to dilute gas samples from sulfur recovery plants hundredfold (99:1) resulting in an upper limit of about 1000 ppm for each compound.

2.2 Sensitivity. The minimum detectable concentration of the FPD is also dependent on sample size and would be about 0.5 ppm for a 1 ml sample.

3. *Interferences*

3.1 Moisture Condensation. Moisture condensation in the sample delivery system, the analytical column, or the FPD burner block can cause losses or interferences. This potential is eliminated by heating the probe, filter box, and conncections, and by maintaining the SO_2 scrubber in an ice water bath. Moisture is removed in the SO_2 scrubber and heating the sample beyond this point is not necessary provided the ambient temperature is above 0 °C. Alternatively, moisture may be eliminated by heating the sample line, and by conditioning the sample with dry dilution air to lower its dew point below the operating temperature of the GC/FPD analytical system prior to analysis.

3.2 Carbon Monoxide and Carbon Dioxide. CO and CO_2 have substantial desensitizing effects on the flame photometric detector even after 9:1 dilution. (Acceptable systems must demonstrate that they have eliminated this interference by some procedure such as eluting CO and CO_2 before any of the sulfur compounds to be measured.) Compliance with this requirement can be demonstrated by submitting chromatograms of calibration gases with and without CO_2 in the diluent gas. The CO_2 level should be approximately 10 percent for the case with CO_2 present. The two chromatograms should show agreement within the precision limits of Section 4.1.

3.3 Elemental Sulfur. The condensation of sulfur vapor in the sampling system can lead to blockage of the particulate filter. This problem can be minimized by observing the filter for buildup and changing as needed.

3.4 Sulfur Dioxide (SO_2). Sulfur dioxide is not a specific interferent but may be present in such large amounts that it cannot be effectively separated from the other compounds of interest. The SO_2 scrubber described in Section 5.1.3 will effectively remove SO_2 from the sample.

3.5 Alkali Mist. Alkali mist in the emissions of some control devices may cause a rapid increase in the SO_2 scrubber pH to give low sample recoveries. Replacing the SO_2 scrubber contents after each run will minimize the chances of interference in these cases.

4. *Precision*

4.1 Calibration Precision. A series of three consecutive injections of the same calibration gas, at any dilution, shall produce results which do not vary by more than ±13 percent from the mean of the three injections.

4.2 Calibration Drift. The calibration drift determined from the mean of three injections made at the beginning and end of any run or series of runs within a 24-hour period shall not exceed ±5 percent.

5. *Apparatus*

5.1 Sampling (Figure 15–1).

5.1.1 Probe. The probe shall be made of Teflon or Teflon-lined stainless steel and heated to prevent moisture condensation. It shall be designed to allow calibration gas to enter the probe at or near the sample point entry. Any portion of the probe that contacts the stack gas must be heated to prevent moisture condensation. The probe described in Section 2.1.1 of Method 16A having a nozzle directed away from the gas stream is recommended for sources having particulate or mist emissions. Where very high stack temperatures prohibit the use of Teflon probe components, glass or quartz-lined probes may serve as substitutes.

NOTE.— Mention of trade names or specific products does not constitute an endorsement by the Environmental Protection Agency.

5.1.2 Particulate Filter. 50-mm Teflon filter holder and a 1- to 2-micron porosity Teflon filter (available through Savillex Corporation, 5325 Highway 101, Minnetonka, Minnesota 55343). The filter holder must be

maintained in a hot box at a temperature of at least 120°C (248°F).

5.1.3 SO_2 Scrubber.

5.1.3.1 Three 300-ml Teflon segment impingers connected in series with flexible, thick-walled, Teflon tubing. (Impinger parts and tubing available through Savillex.) The first two impingers contain 100 ml of citrate buffer, and the third impinger is initially dry. The tip of the tube inserted into the solution should be constricted to less than 3-mm (⅛-in.) ID and should be immersed to a depth of at least 5 cm (2 in.). Immerse the impingers in an ice water bath and maintain near 0°C. The scrubber solution will normally last for a 3-hour run before needing replacement. This will depend upon the effects of moisture and particulate matter on the solution strength and pH.

5.1.3.2 Connections between the probe, particulate filter, and $S0_2$ scrubber shall be made of Teflon and as short in length as possible. All portions of the probe, particulate filter, and connections prior to the $S0_2$ scrubber (or alternative point of moisture removal) shall be maintained at a temperature of at least 120 °C (248 °F).

5.1.4 Sample Line. Teflon, no greater than 1.3-cm (½-in.) ID. Alternative materials, such as virgin Nylon, may be used provided the line loss test is acceptable.

5.1.5 Sample Pump. The sample pump shall be a leakless Teflon-coated diaphragm type or equivalent.

5.2 Dilution System. The dilution system must be constructed such that all sample contacts are made of Teflon, glass, or stainless-steel. It must be capable of approximately a 9:1 dilution of the sample.

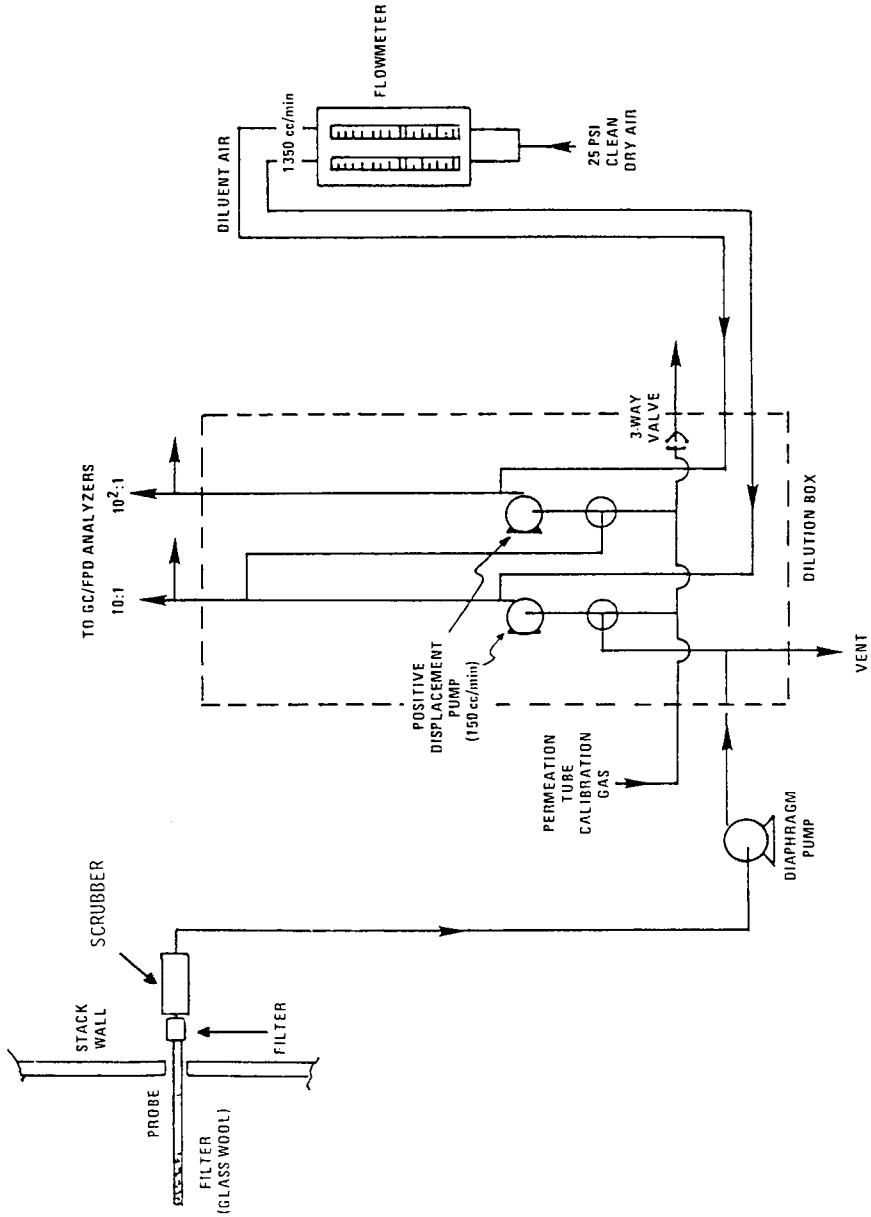

Figure 15-1. Sampling and dilution apparatus.

14a

5.3 Gas Chromatograph (Figure 15–2). The gas chromatograph must have at least the following components:

5.3.1 Oven. Capable of maintaining the separation column at the proper operating temperature ±1 °C.

5.3.2 Temperature Gauge. To monitor column oven, detector, and exhaust temperature ±1 °C.

5.3.3 Flow System. Gas metering system to measure sample, fuel, combustion gas, and carrier gas flows.

5.3.4 Flame Photometric Detector.

5.3.4.1 Electrometer. Capable of full scale amplification of linear ranges of 10^{-9} to 10^{-4} amperes full scale.

5.3.4.2 Power Supply. Capable of delivering up to 750 volts.

5.3.4.3 Recorder. Compatible with the output voltage range of the electrometer.

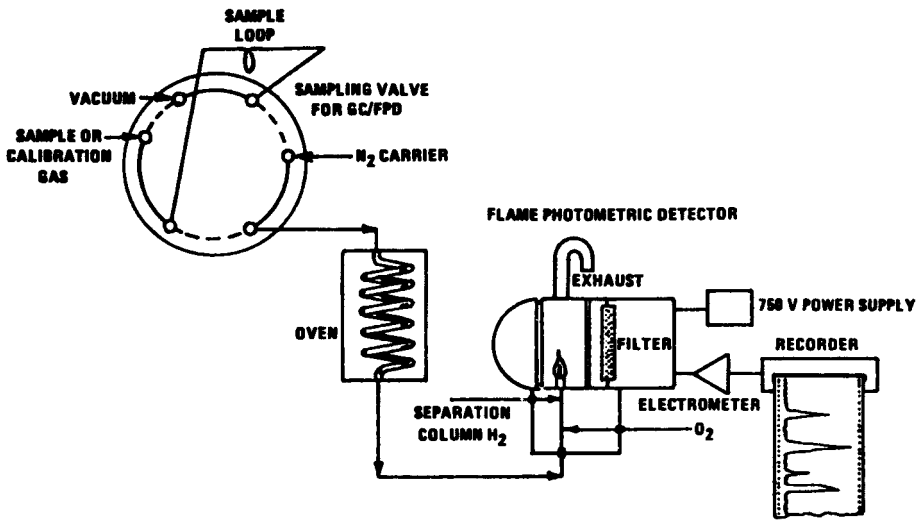

Figure 15-2. Gas chromatographic flame photometric analyzer.

5.3.4.4 Rotary Gas Valves. Multiport Teflon-lined valves equipped with sample loop. Sample loop volumes shall be chosen to provide the needed analytical range. Teflon tubing and fittings shall be used throughout to present an inert surface for sample gas. The gas chromatograph shall be calibrated with the sample loop used for sample analysis.

5.4 Gas Chromatograph Columns. The column system must be demonstrated to be capable of resolving three major reduced sulfur compounds: H_2S, COS, and CS_2.

To demonstrate that adequate resolution has been achieved the tester must submit a chromatogram of a calibration gas containing all three reduced sulfur compounds in the concentration range of the applicable standard. Adequate resolution will be defined as base line separation of adjacent peaks when the amplifier attenuation is set so that the smaller peak is at least 50 percent of full scale. Base line separation is defined as a return to zero ±5 percent in the interval between peaks. Systems not meeting this criteria may be considered alternate methods subject to the approval of the Administrator.

5.5 Calibration System (Figure 15–3). The calibration system must contain the following components.

5.5.1 Flow System. To measure air flow over permeation tubes within ±2 percent. Each flowmeter shall be calibrated after a complete test series with a wet-test meter. If the flow measuring device differs from the wet-test meter by more than 5 percent, the completed test shall be discarded. Alternatively, the tester may elect to use the flow data that will yield the lowest flow measurement. Calibration with a wet-test meter before a test is optional. Flow over the permeation device may also be determined using a soap bubble flowmeter.

5.5.2 Constant Temperature Bath. Device capable of maintaining the permeation tubes at the calibration temperature within 0.1 °C.

5.5.3 Temperature Gauge. Thermometer or equivalent to monitor bath temperature within 0.1 °C.

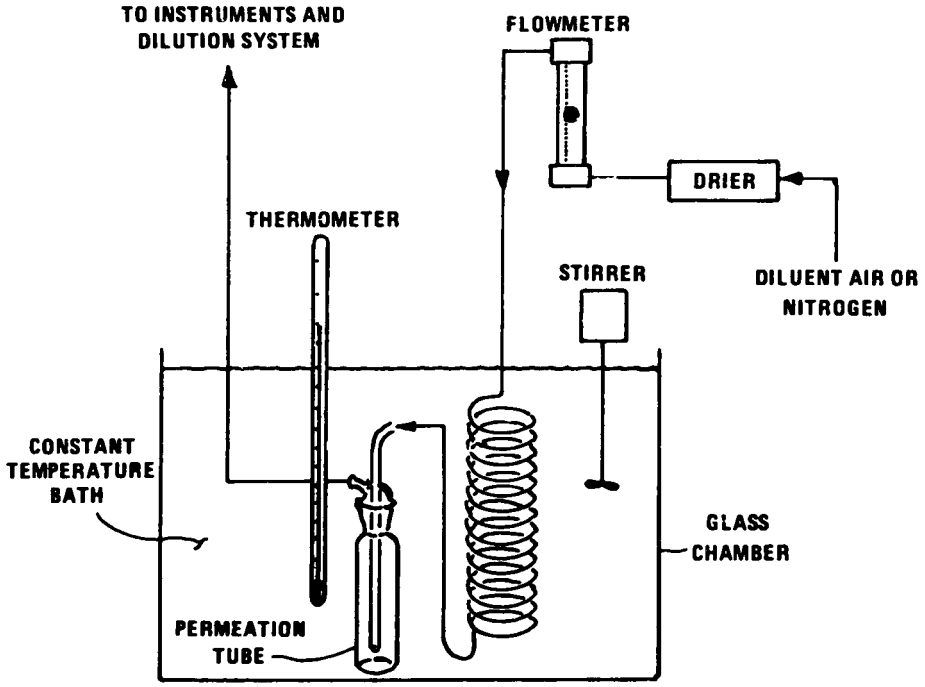

Figure 15-3. Apparatus for field calibration.

6. *Reagents*

6.1 Fuel. Hydrogen (H_2) prepurified grade or better.

6.2 Combustion Gas. Oxygen (O_2) or air, research purity or better.

6.3 Carrier Gas. Prepurified grade or better.

6.4 Diluent. Air containing less than 0.5 ppm total sulfur compounds and less than 10 ppm each of moisture and total hydrocarbons.

6.5 Calibration Gases. Permeation tubes, one each of H_2S, COS, and CS_2, gravimetrically calibrated and certified at some convenient operating temperature. These tubes consist of hermetically sealed FEP Teflon tubing in which a liquified gaseous substance is enclosed. The enclosed gas permeates through the tubing wall at a constant rate. When the temperature is constant, calibration gases covering a wide range of known concentrations can be generated by varying and accurately measuring the flow rate of diluent gas passing over the tubes. These calibration gases are used to calibrate the GC/FPD system and the dilution system.

6.6 Citrate Buffer. Dissolve 300 g of potassium citrate and 41 g of anhydrous citric acid in 1 liter of water. Alternatively, 284 g of sodium citrate may be substituted for the potassium citrate. Adjust the pH to between 5.4 and 5.6 with potassium citrate or citric acid, as required.

6.7 Sample Line Loss Gas (Optional). As an alternative, H_2S cylinder gas may be used for the sample line loss test. The gas shall be calibrated against permeation devices having known permeation rates or by the procedure in Section 7 of Method 16A.

7. *Pretest Procedures*

The following procedures are optional but would be helpful in preventing any problem which might occur later and invalidate the entire test.

7.1 After the complete measurement system has been set up at the site and deemed to be operational, the following procedures should be completed before sampling is initiated.

7.1.1 Leak Test. Appropriate leak test procedures should be employed to verify the integrity of all components, sample lines, and connections. The following leak test procedure is suggested: For components upstream of the sample pump, attach the probe end of

the sample line to a manometer or vacuum gauge, start the pump and pull greater than 50 mm (2 in.) Hg vacuum, close off the pump outlet, and then stop the pump and ascertain that there is no leak for 1 minute. For components after the pump, apply a slight positive pressure and check for leaks by applying a liquid (detergent in water, for example) at each joint. Bubbling indicates the presence of a leak. As an alternative to the initial leak-test, the sample line loss test described in Section 10.1 may be performed to verify the integrity of components.

7.1.2 System Performance. Since the complete system is calibrated following each test, the precise calibration of each component is not critical. However, these components should be verified to be operating properly. This verification can be performed by observing the response of flowmeters or of the GC output to changes in flow rates or calibration gas concentrations and ascertaining the response to be within predicted limits. If any component or the complete system fails to respond in a normal and predictable manner, the source of the discrepancy should be identified and corrected before proceeding.

8. *Calibration*

Prior to any sampling run, calibrate the system using the following procedures. (If more than one run is performed during any 24-hour period, a calibration need not be performed prior to the second and any subsequent runs. The calibration must, however, be verified as prescribed in Section 10, after the last run made within the 24-hour period.)

8.1 General Considerations. This section outlines steps to be followed for use of the GC/FPD and the dilution system. The procedure does not include detailed instructions because the operation of these systems is complex, and it requires an understanding of the individual system being used. Each system should include a written operating manual describing in detail the operating procedures associated with each component in the measurement system. In addition, the operator should be familiar with the operating principles of the components; particularly the GC/FPD. The citations in the Bibliography at the end of this method are recommended for review for this purpose.

8.2 Calibration Procedure. Insert the permeation tubes into the tube chamber. Check the bath temperature to assure agreement with the calibration temperature of the tubes within ±0.1 °C. Allow 24 hours for the tubes to equilibrate. Alternatively equilibration may be verified by injecting samples of calibration gas at 1-hour intervals. The permeation tubes can be assumed to have reached equilibrium when consecutive hourly samples agree within the precision limits of Section 4.1.

Vary the amount of air flowing over the tubes to produce the desired concentrations for calibrating the analytical and dilution systems. The air flow across the tubes must at all times exceed the flow requirement of the analytical systems. The concentration in parts per million generated by a tube containing a specific permeant can be calculated as follows:

$$C = K \times P_r / ML \qquad \text{Eq. 15–1}$$

Where:

C=Concentration of permeant produced in ppm.

P_r=Permeation rate of the tube in µg/min.

M=Molecular weight of the permeant: g/g-mole.

L=Flow rate, l/min, of air over permeant @ 20 °C, 760 mm Hg.

K=Gas constant at 20 °C and 760 mm Hg=24.04 l/g mole.

8.3 Calibration of Analysis System. Generate a series of three or more known concentrations spanning the linear range of the FPD (approximately 0.5 to 10 ppm for a 1—ml sample) for each of the three major sulfur compounds. Bypassing the dilution system, inject these standards into the GC/FPD analyzers and monitor the responses. Three injects for each concentration must yield the precision described in Section 4.1. Failure to attain this precision is an indication of a problem in the calibration or analytical system. Any such problem must be identified and corrected before proceeding.

8.4 Calibration Curves. Plot the GC/FPD response in current (amperes) versus their causative concentrations in ppm on log-log coordinate graph paper for each sulfur compound. Alternatively, a least squares equation may be generated from the calibration data. Alternatively, a least squares equation may be generated from the calibration data using concentrations versus the appropriate instrument response units.

8.5 Calibration of Dilution System. Generate a known concentration of hydrogen sulfied using the permeation tube system. Adjust the flow rate of diluent air for the first dilution stage so that the desired level of dilution is approximated. Inject the diluted calibration gas into the GC/FPD system and monitor its response. Three injections for each dilution must yield the precision described in Section 4.1. Failure to attain this precision in this step is an indication of a problem in the dilution system. Any such problem must be identified and corrected before proceeding. Using the calibration data for H_2S (developed under 8.3) determine the diluted calibration gas concentration in ppm. Then calculate the dilution factor as the ratio of the calibration gas concentration before dilution to the diluted calibration gas concentration determined under this section. Repeat this procedure for

each stage of dilution required. Alternatively, the GC/FPD system may be calibrated by generating a series of three or more concentrations of each sulfur compound and diluting these samples before injecting them into the GC/FPD system. This data will then serve as the calibration data for the unknown samples and a separate determination of the dilution factor will not be necessary. However, the precision requirements of Section 4.1 are still applicable.

9. *Sampling and Analysis Procedure*

9.1 Sampling. Insert the sampling probe into the test port making certain that no dilution air enters the stack through the port. Begin sampling and dilute the sample approximately 9:1 using the dilution system. Note that the precise dilution factor is that which is determined in section 8.5. Condition the entire system with sample for a minimum of 15 minutes prior to commencing analysis.

9.2 Analysis. Aliquots of diluted sample are injected into the GC/FPD analyzer for analysis.

9.2.1 Sample Run. A sample run is composed of 16 individual analyses (injects) performed over a period of not less than 3 hours or more than 6 hours.

9.2.2 Observation for Clogging of Probe or Filter. If reductions in sample concentrations are observed during a sample run that cannot be explained by process conditions, the sampling must be interrupted to determine if the probe or filter is clogged with particulate matter. If either is found to be clogged, the test must be stopped and the results up to that point discarded. Testing may resume after cleaning or replacing the probe and filter. After each run, the probe and filter shall be inspected and, if necessary, replaced.

10. *Post-Test Procedures*

10.1 Sample Line Loss. A known concentration of hydrogen sulfide at the level of the applicable standard, ±20 percent, must be introduced into the sampling system at the opening of the probe in sufficient quantities to ensure that there is an excess of sample which must be vented to the atmosphere. The sample must be transported through the entire sampling system to the measurement system in the normal manner. The resulting measured concentration should be compared to the known value to determine the sampling system loss. A sampling system loss of more than 20 percent is unacceptable. Sampling losses of 0–20 percent must be corrected by dividing the resulting sample concentration by the fraction of recovery. The known gas sample may be generated using permeation tubes. Alternatively, cylinders of hydrogen sulfide mixed in nitrogen and verified according to Section 6.7 may be used. The optional pretest procedures provide a good guideline for determining if there are leaks in the sampling system.

10.2 Recalibration. After each run, or after a series of runs made within a 24-hour period, perform a partial recalibration using the procedures in Section 8. Only H_2S (or other permeant) need be used to recalibrate the GC/FPD analysis system (8.3) and the dilution system (8.5).

10.3 Determination of Calibration Drift. Compare the calibration curves obtained prior to the runs, to the calibration curves obtained under Section 10.2. The calibration drift should not exceed the limits set forth in Section 4.2. If the drift exceeds this limit, the intervening run or runs should be considered not valid. The tester, however, may instead have the option of choosing the calibration data set which would give the highest sample values.

11. *Calculations*

11.1 Determine the concentrations of each reduced sulfur compound detected directly from the calibration curves. Alternatively, the concentrations may be calculated using the equation for the least squares line.

11.2 Calculation of SO_2 Equivalent. SO_2 equivalent will be determined for each analysis made by summing the concentrations of each reduced sulfur compound resolved during the given analysis.

$$SO_2 \text{ equivalent} = \Sigma(H_2S, COS, 2\,CS_2)d \qquad \text{Eq. 15–2}$$

Where:

SO_2 equivalent=The sum of the concentration of each of the measured compounds (COS, H_2S, CS_2) expressed as sulfur dioxide in ppm.

H_2S=Hydrogen sulfide, ppm.

COS=Carbonyl sulfide, ppm.

CS_2=Carbon disulfide, ppm.

d=Dilution factor, dimensionless.

11.3 Average SO_2 Equivalent. This is determined using the following equation. Systems that do not remove moisture from the sample but conditions the gas to prevent condensation must correct the average SO_2 equivalent for the fraction of water vapor present.

$$\text{Average } SO_2 \text{ equivalent} = \frac{\sum_{i=1}^{N} SO_2 \text{ equiv}_i}{N} \qquad \text{Eq. 15-3}$$

where:

Average SO_2 equivalent = Average SO_2 equivalent in ppm, dry basis.

Average SO_2 equivalent $_i$ = SO_2 in ppm as determined by Equation 15–2.

N = Number of analyses performed.

12. *Bibliography*

12.1 O'Keeffe, A. E. and G. C. Ortman. ''Primary Standards for Trace Gas Analysis.'' Anal. Chem. 38,760 (1966).

12.2 Stevens, R. K., A. E. O'Keeffe, and G. C. Ortman. ''Absolute Calibration of a Flame Photometric Detector to Volatile Sulfur Compounds at Sub-Part-Per-Million Levels.'' Environmental Science and Technology 3:7 (July 1969).

12.3 Mulik, J. D., R. K. Stevens, and R. Baumgardner. ''An Analytical System Designed to Measure Multiple Malodorous Compounds Related to Kraft Mill Activities.'' Presented at the 12th Conference on Methods in Air Pollution and Industrial Hygiene Studies, University of Southern California, Los Angeles, CA, April 6–8, 1971.

12.4 Devonald, R. H., R. S. Serenius, and A. D. McIntyre. ''Evaluation of the Flame Photometric Detector for Analysis of Sulfur Compounds.'' Pulp and Paper Magazine of Canada, 73,3 (March, 1972).

12.5 Grimley, K. W., W. S. Smith, and R. M. Martin. ''The Use of a Dynamic Dilution System in the Conditioning of Stack Gases for Automated Analysis by a Mobile Sampling Van.'' Presented at the 63rd Annual APCA Meeting in St. Louis, MO. June 14–19, 1970.

12.6 General Reference. Standard Methods of Chemical Analysis Volume III A and B Instrumental Methods. Sixth Edition. Van Nostrand Reinhold Co.

METHOD 15A—DETERMINATION OF TOTAL REDUCED SULFUR EMISSIONS FROM SULFUR RECOVERY PLANTS IN PETROLEUM REFINERIES

1. *Applicability, Principle, Interferences, Precision, and Bias*

1.1 Applicability. This method is applicable to the determination of total reduced sulfur (TRS) emissions from sulfur recovery plants where the emissions are in a reducing atmosphere, such as in Stretford units. The lower detectable limit is 0.1 ppm of sulfur dioxide (SO_2) when sampling at 2 liters/min for 3 hours or 0.3 ppm when sampling at 2 liters/min for 1 hour. The upper concentration limit of the method exceeds TRS levels generally encountered in sulfur recovery plants.

1.2 Principle. An integrated gas sample is extracted from the stack, and combustion air is added to the oxygen (O_2)-deficient gas at a known rate. The TRS compounds (hydrogen sulfide, carbonyl sulfide, and carbon disulfide) are thermally oxidized to sulfur dioxide, collected in hydrogen peroxide as sulfate ion, and then analyzed according to the Method 6 barium-thorin titration procedure.

1.3 Interferences. Reduced sulfur compounds, other than TRS, that are present in the emissions will also be oxidized to SO_2. For example, thiophene has been identified in emissions from a Stretford unit and produced a positive bias of 30 percent in the Method 15A result. However, these biases may not affect the outcome of the test at units where emissions are low relative to the standard.

Calcium and aluminum have been shown to interfere in the Method 6 titration procedure. Since these metals have been identified in particulate matter emissions from Stretford units, a Teflon filter is required to remove this interference.

NOTE: Mention of trade name or commercial products in this publication does not constitute the endorsement or recommendation for use by the Environmental Protection Agency.

When used to sample emissions containing 7 percent moisture or less, the midget impingers have sufficient volume to contain the condensate collected during sampling. Dilution of the H_2O_2 does not affect the collection of SO_2. At higher moisture contents, the potassium citrate-citric acid buffer system used with Method 16A should be used to collect the condensate.

1.4 Precision and bias. Relative standard deviations of 2.8 and 6.9 percent at 41 ppm TRS have been obtained when sampling for 1 and 3 hours, respectively. Results obtained with this method are likely to contain a positive bias due to the presence of nonregulated sulfur compounds (that are present in petroleum) in the emissions.

2. *Apparatus*

2.1 Sampling. The sampling train is shown in Figure 15A–1, and component parts are discussed below. Modifications to this sampling train are acceptable provided that the system performance check is met.

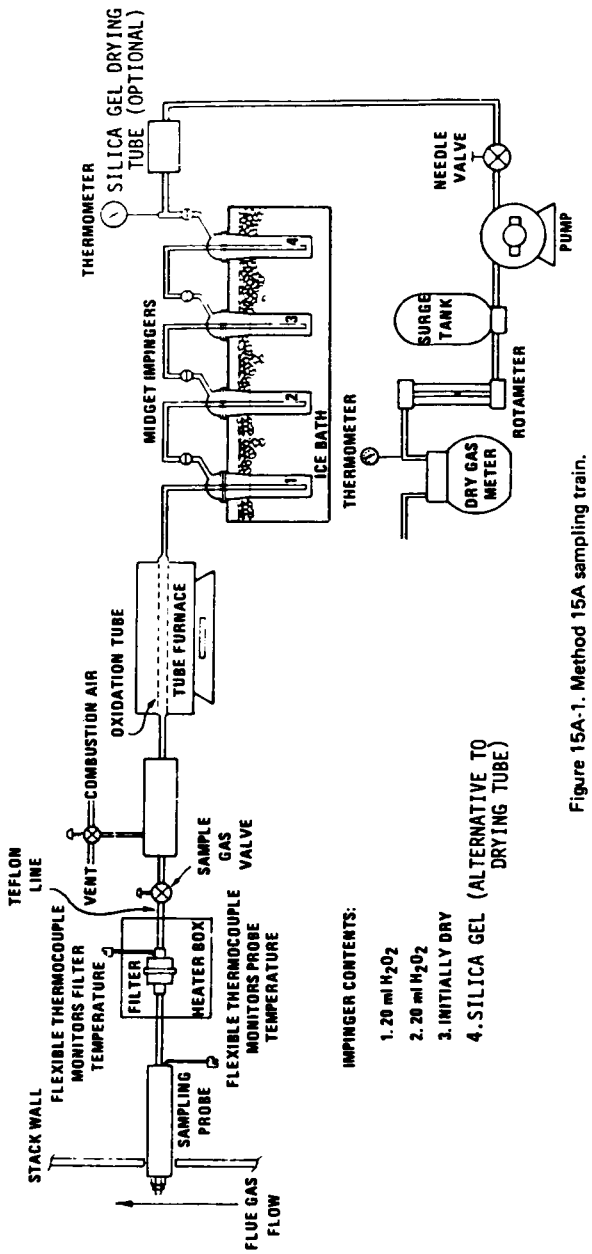

Figure 15A-1. Method 15A sampling train.

2.1.1 Probe. 0.6-cm (¼-in.) OD Teflon tubing sequentially wrapped with heat-resistant fiber strips, a rubberized heating tape (with a plug at one end), and heat-resistant adhesive tape. A flexible thermocouple or some other suitable temperature-measuring device shall be placed between the Teflon tubing and the fiber strips so that the temperature

can be monitored. The probe should be sheathed in stainless steel to provide in-stack rigidity. A series of bored-out stainless steel fittings placed at the front of the sheath will prevent flue gas from entering between the probe and sheath. The sampling probe is depicted in Figure 15A–2.

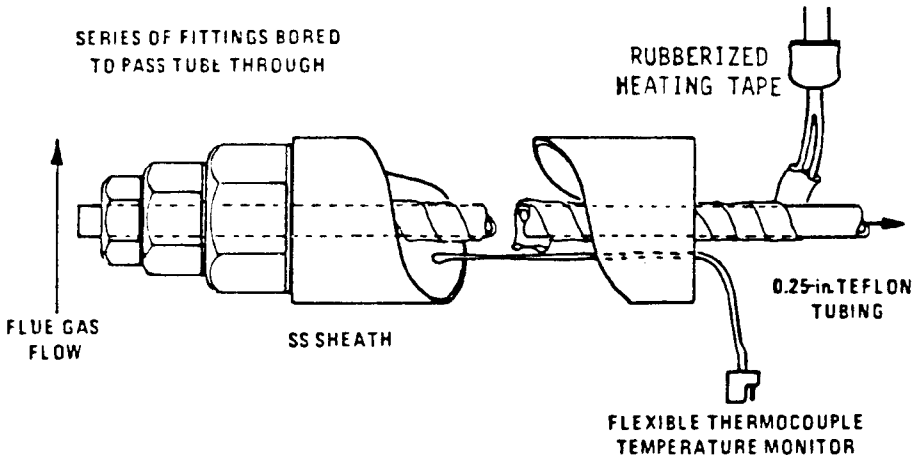

Figure 15A–2. Method 15A sampling probe.

2.1.2 Particulate filter. A 50-mm Teflon filter holder and a 1- to 2-µm porosity Teflon filter (available through Savillex Corporation, 5325 Highway 101, Minnetonka, Minnesota 55345). The filter holder must be maintained in a hot box at a high enough temperature to prevent condensation.

2.1.3 Combustion air delivery system. As shown in the schematic diagram in Figure 15A–3. The rotameter should be selected to measure an air flow rate of 0.5 liter/min.

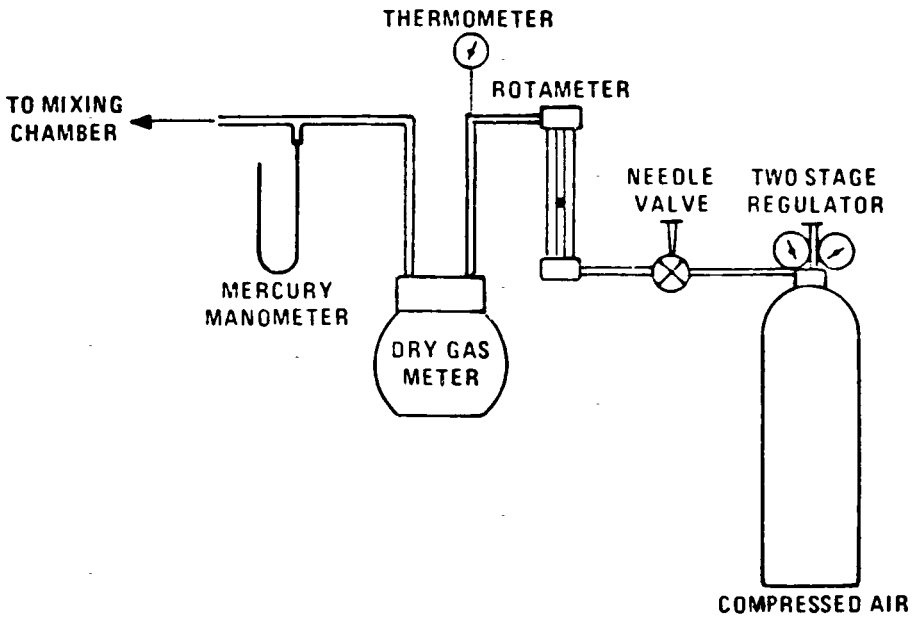

Figure 15A-3. Combustion air delivery system.

2.1.4 Combustion tube. Quartz glass tubing with an expanded combustion chamber 2.54 cm (1 in.) in diameter and at least 30.5 cm (12 in.) long. The tube ends should have an outside diameter of 0.6 cm (¼ in.) and be at least 15.3 cm (6 in.) long. This length is necessary to maintain the quartz-glass connector at ambient temperature and thereby avoid leaks. Alternatively, the outlet may be constructed with a 90-degree glass elbow and socket that would fit directly onto the inlet of the first peroxide impinger.

2.1.5 Furnace. Of sufficient size to enclose the combustion tube. The furnace shall have a temperature regulator capable of maintaining the temperature at 1100 ± 50°C. The furnace operating temperature shall be checked with a thermocouple to ensure accuracy. Lindberg furnaces have been found to be satisfactory.

2.1.6 Peroxide impingers, stopcock grease, thermometer, drying tube, valve, pump, barometer, and vacuum gauge. Same as in Method 6, Sections 2.1.2, 2.1.4, 2.1.5, 2.1.6, 2.1.7, 2.1.8, 2.1.11, and 2.1.12, respectively.

2.1.7 Rate meters. Rotameters (or equivalent) capable of measuring flow rate to within 5 percent of the selected flow rate and calibrated as in Section 5.2.

2.1.8 Volume meter. Dry gas meter capable of measuring the sample volume under the particular sampling conditions with an accuracy of ± 2 percent.

2.1.9 U-tube manometer. To measure the pressure at the exit of the combustion gas dry gas meter.

2.2 Sample recovery and analysis. Same as in Method 6, Sections 2.2 and 2.3, except a 10-ml buret with 0.05-ml graduations is required for titrant volumes of less than 10.0 ml, and the spectrophotometer is not needed.

3. *Reagents*

Unless otherwise indicated, all reagents must conform to the specifications established by the Committee on Analytical Reagents of the American Chemical Society. When such specifications are not available, the best available grade shall be used.

3.1 Sampling. The following reagents are needed:

3.1.1 Water. Same as in Method 6, Section 3.1.1.

3.1.2 Hydrogen peroxide, 3 percent. Same as in Method 6, Section 3.1.5 (40 ml is needed per sample).

3.1.3 Recovery check gas. Carbonyl sulfide (COS) in nitrogen (100 ppm or greater, if necessary) in an aluminum cylinder. Verify the

concentration by gas chromatography where the instrument is calibrated with a COS permeation tube.

3.1.4 Combustion gas. Air, contained in a gas cylinder equipped with a two-stage regulator. The gas should contain less than 50 ppb of reduced sulfur compounds and less than 10 ppm total hydrocarbons.

3.2 Sample recovery and analysis. Same as in Method 6, Sections 3.2 and 3.3.

4. *Procedure*

4.1 Sampling. Before any source sampling is done, conduct two 30-minute system performance checks in the field, as detailed in Section 4.3, to validate the sampling train components and procedures (optional).

4.1.1 Preparation of sampling train. For the Method 6 part of the train, measure 20 ml of 3 percent hydrogen peroxide into the first and second midget impingers. Leave the third midget impinger empty and add silica gel to the fourth impinger. Alternatively, a silica gel drying tube may be used in place of the fourth impinger. Place crushed ice and water around all impingers. Maintain the oxidation furnace at 1100 ± 50°C to ensure 100 percent oxidation of COS. Maintain the probe and filter temperatures at a high enough level (no visible condensation) to prevent moisture condensation and monitor the temperatures with a thermocouple.

4.1.2 Leak-check procedure. Assemble the sampling train and leak-check as described in Method 6, Section 4.1.2. Include the combustion air delivery system from the needle valve forward in the leak-check.

4.1.3 Sample collection. Adjust the pressure on the second stage of the regulator on the combustion air cylinder to 10 psig. Adjust the combustion air flow rate to 0.50 liter/min (±10 percent) before injecting combustion air into the sampling train. Then inject combustion air into the sampling train, start the sample pump, and open the stack sample gas valve. Carry out these three operations within 15 to 30 seconds to avoid pressurizing the sampling train. Adjust the total sample flow rate to 2.0 liters/min (±10 percent). The combustion air flow rate of 0.50 liter/min and the total sample flow rate of 2.0 liters/min produce an 0_2 concentration of 5.0 percent in the stack gas. This 0_2 concentration must be maintained constantly to allow oxidation of TRS to SO_2. Adjust these flow rates during sampling as necessary. Monitor and record the combustion air manometer reading at regular intervals during the sampling period. Sample for 1 or 3 hours. At the end of sampling, turn off the sample pump and combustion air simultaneously (within 15 to 30 seconds of each other). All other procedures are the same as in Method 6, Section 4.1.3, except that the sampling train should not be purged. After collecting the sample, remove the probe from the stack and conduct a leak-check (mandatory).

After each 3-hour test run (or after three 1-hour samples), conduct one system performance check (see Section 4.3). After this system performance check and before the next test run, it is recommended that the probe be rinsed and brushed and the filter replaced.

In Method 15, a test run is composed of 16 individual analyses (injects) performed over a period of not less than 3 hours or more than 6 hours. For Method 15A to be consistent with Method 15, the following may be used to obtain a test run: (1) Collect three 60-minute samples or (2) collect one 3-hour sample. (Three test runs constitute a test.)

4.2 Sample recovery. Recover the hydrogen peroxide-containing impingers as detailed in Method 6, Section 4.2.

4.3 System performance check. A system performance check is done (1) to validate the sampling train components and procedure (before testing, optional) and (2) to validate a test run (after a run). Perform a check in the field before testing consisting of at least two samples (optional), and perform an additional check after each 3-hour run or after three 1-hour samples (mandatory).

The checks involve sampling a known concentration of COS and comparing the analyzed concentration with the known concentration. Mix the recovery gas with N_2 as shown in Figure 15A–4 if dilution is required. Adjust the flow rates to generate a COS concentration in the range of the stack gas or within 20 percent of the applicable standard at a total flow rate of at least 2.5 liters/min. Use Equation 15A–4 to calculate the concentration of recovery gas generated. Calibrate the flow rate from both sources with a soap bubble flow tube so that the diluted concentration of COS can be accurately calculated. Collect 30-minute samples, and analyze in the normal manner. Collect the samples through the probe of the sampling train using a manifold or some other suitable device that will ensure extraction of a representative sample.

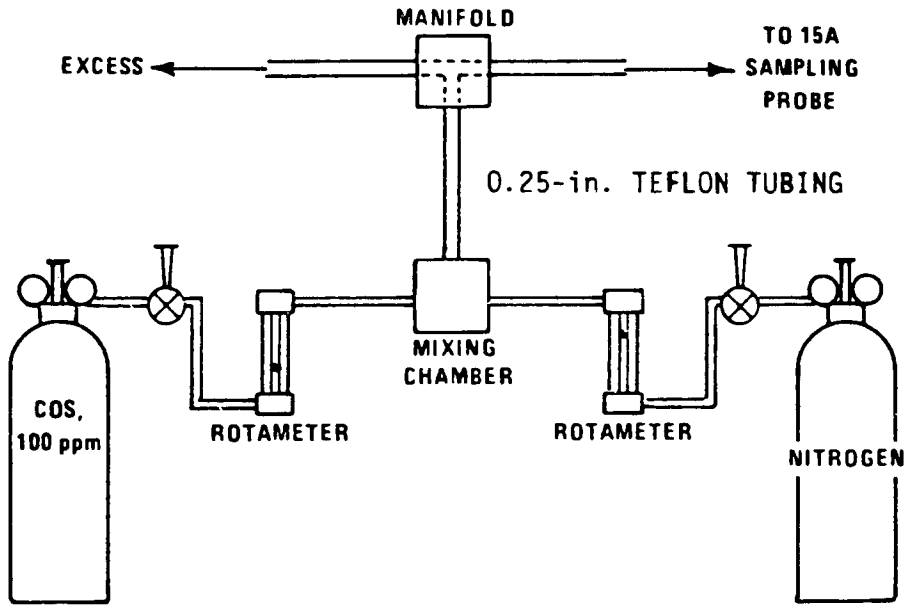

Figure 15A-4. COS recovery gas generator system.

The recovery check must be performed in the field before replacing the particulate filter and before cleaning the probe. A sample recovery of 100 ± 20 percent must be obtained for the data to be valid and should be reported with the emission data, but should not be used to correct the data. However, if the performance check results do not affect the compliance or noncompliance status of the affected facility, the Administrator may decide to accept the results of the compliance test. Use Equation 15A–5 to calculate the recovery efficiency.

4.4 Sample analysis. Same as in Method 6, Section 4.3. For compliance tests only, an EPA SO_2 field audit sample shall be analyzed with each set of samples. Such audit samples are available from the Quality Assurance Division, Environmental Monitoring Systems Laboratory, U.S. Environmental Protection Agency, Research Triangle Park, NC 27711.

5. *Calibration.*

5.1 Metering system, thermometers, barometer, and barium perchlorate solution. Calibration procedures are presented in Method 6, Sections 5.1, 5.2, 5.4, and 5.5.

5.2 Rotameters. Calibrate with a bubble flow tube.

6. *Calculations.*

In the calculations, retain at least one extra decimal figure beyond that of the acquired data. Round off figures after final calculations.

6.1 Nomenclature.

C_{TRS}=Concentration of TRS as SO_2, dry basis, corrected to standard conditions, ppm.

N=Normality of barium perchlorate titrant, milliequivalents/ml.

P_{bar}=Barometric pressure at exit orifice of the dry gas meter, mm Hg.

P_{std}=Standard absolute pressure, 760 mm Hg.

T_m=Average dry gas meter absolute temperature, °.

T_{std}=Standard absolute temperature, 293°.

V_a=Volume of sample aliquot titrated, ml.

V_{ms}=Dry gas volume as measured by the sample train dry gas meter, liters.

V_{mc}=Dry gas volume as measured by the combustion air dry gas meter, liters.

$V_{ms(std)}$=Dry gas volume measured by the sample train dry gas meter, corrected to standard conditions, liters.

$V_{mc(std)}$=Dry gas volume measured by the combustion air dry gas meter, corrected to standard conditions, liters.

V_{soln}=Total volume of solution in which the sulfur dioxide sample is contained, 100 ml.
V_t=Volume of barium perchlorate titrant used for the sample (average of replicate titrations), ml.
V_{tb}=Volume of barium perchlorate titrant used for the blank, ml.
Y=Calibration factor for sampling train dry gas meter.
Yc=Calibration factor for combustion air dry gas meter.
C_{RG}=Concentration of generated recovery gas, ppm.
C_{COS}=Concentration of COS recovery gas, ppm.
Q_{COS}=Flow rate of COS recovery gas, liters/min.
Q_{N2}=Flow rate of diluent N_2, liters/min.
R=Recovery efficiency for the system performance check, percent.
32.03=Equivalent weight of sulfur dioxide, mg/meq.

$$12025\frac{\mu l}{meq}=\frac{(32.03mg)}{(meq)}\frac{(24.05\,liters)}{(mole)}\frac{(mole)(1g)(10^3\,ml)(10^3\,\mu l)}{(64.06\,g)(10^3\,g)(liter)(ml)}$$

6.2 Dry Sample Gas Volume, Corrected to Standard Conditions.

$$V_{ms(std)}=\frac{V_{ms}Y(T_{std})(P_{bar})}{(T_m)(P_{std})}=\frac{K_1Y(V_m)(P_{bar})}{T_m}\qquad \text{Eq. 15A-1}$$

where: K_1=0.3858°K/mm Hg for metric units.

6.3 Combustion Air Gas Volume, Gorrected to Standard Conditions.

$$V_{mc(std)}=\frac{k_1Y_c(V_{mc})(P_{bar})}{T_m}\qquad \text{Eq. 15A-2}$$

NOTE: Correct P_{bar} for the average pressure of the manometer during the sampling period.

6.4 Concentration of TRS as ppm SO_2.

$$C_{TRS}=\frac{K_2(V_t-V_{tb})N(V_{soln}/V_a)}{V_{ms(std)}-V_{mc(std)}}\qquad \text{Eq. 15A-3}$$

where: K_2=12025 µl/meq for metric units.

6.5 Concentration of Generated Recovery Gas.

$$C_{RG}=\frac{(C_{COS})(Q_{COS})}{Q_{COS}+Q_{N2}}\qquad \text{Eq. 15A-4}$$

6.6 Recovery Efficiency.

$$R=\frac{C_{TRS}}{C_{RG}}\times 100\qquad \text{Eq. 15A-5}$$

7. *Bibliography*

1. *American Society for Testing and Materials* Annual Book of ASTM Standards. Part 31: Water, Atmospheric Analysis. Philadelphia, Pennsylvania. 1974. p. 40–42.

2. *Blosser, R.O., H.S. Oglesby, and A.K. Jain* A Study of Alternate SO_2 Scrubber Designs Used for TRS Monitoring. National Council of the Paper Industry for Air and Stream Improvement, Inc., New York, New York. Special Report 77–05. July 1977.

3. *Curtis, F., and G.D. McAlister* Development and Evaluation of an Oxidation/Method 6 TRS Emission Sampling Procedure. Emission Measurement Branch, Emission Standards and Engineering Division, U.S. Environmental Protection Agency,

Research Triangle Park, North Carolina 27711. February 1980.

4. *Gellman, I.*

A Laboratory and Field Study of Reduced Sulfur Sampling and Monitoring Systems.

National Council of the Paper Industry for Air and Stream Improvement, Inc., New York, New York. Atmospheric Quality Improvement Technical Bulletin No. 81. October 1975.

5. *Margeson, J.H., J.E. Knoll, M.R. Midgett, B.B. Ferguson, and P.J. Schworer*

A Manual Method for TRS Determination. Journal of Air Pollution Control Association. *35:*1280–1286. December 1985.

METHOD 16—SEMICONTINUOUS DETERMINATION OF SULFUR EMISSIONS FROM STATIONARY SOURCES

Introduction

The method described below uses the principle of gas chromatographic separation and flame photometric detection (FPD). Since there are many systems or sets of operating conditions that represent useable methods of determining sulfur emissions, all systems which employ this principle, but differ only in details of equipment and operation, may be used as alternative methods, provided that the calibration precision and sample line loss criteria are met.

1. *Principle and Applicability*

1.1 Principle. A gas sample is extracted from the emission source and an aliquot is analyzed for hydrogen sulfide (H_2S), methyl mercaptan (MeSH), dimethly sulfide (DMS), and dimethyl disulfide (DMDS) by gas chromatographic (GC) separation and flame photometric detection (FPD). These four compounds are know collectively as total reduced sulfur (TRS).

1.2 Applicability. This method is applicable for determination of TRS compounds from recovery furnaces, lime kilns, and smelt dissolving tanks at kraft pulp mills.

2. *Range and Sensitivity*

2.1 Range. The analytical range will vary with the sample loop size. Typically, the analytical range may extend from 0.1 to 100 ppm using 10 to 0.1-ml sample loop sizes. This eliminates the need for sample dilution in most cases.

2.2 Sensitivity. Using the 10-ml sample size, the minimum detectable concentration is approximately 50 ppb.

3. *Interferences*

3.1 Moisture Condensation. Moisture condensation in the sample delivery system, the analytical column, or the FPD burner block can cause losses or interferences. This is prevented by maintaining the probe, filter box, and connections at a temperature of at least 120 °C (248 °F). Moisture is removed in the SO_2 scrubber and heating the sample beyond this point is not necessary provided the ambient temperature is above 0 °C. Alternatively, moisture may be eliminated by heating the sample line, and by conditioning the sample with dry dilution air to lower its dew point below the operating temperature of the GC/FPD analytical system prior to analysis.

3.2 Carbon Monoxide and Carbon Dioxide. CO and CO_2 have a substantial desensitizing effect on the flame photometric detector even after dilution. Acceptable systems must demonstrate that they have eliminated this interference by some procedure such as eluting these compounds before any of the compounds to be measured. Compliance with this requirement can be demonstrated by submitting chromatograms of calibration gases with and without CO_2 in the diluent gas. The CO_2 level should be approximately 10 percent for the case with CO_2 present. The two chromatograms should show agreement within the precision limits of Section 4.1.

3.3 Particulate Matter. Particulate matter in gas samples can cause interference by eventual clogging of the analytical system. This interference is eliminated by using the Teflon filter after the probe.

3.4 Sulfur Dioxide (SO_2). Sulfur dioxide is not a specific interferent but may be present in such large amounts that it cannot be effectively separated from the other compounds of interest. The SO_2 scrubber described in Section 5.1.3 will effectively remove SO_2 from the sample.

4. *Precision and Accuracy*

4.1 GC/FPD Calibration Precision. A series of three consecutive injections of the same calibration gas, at any dilution, shall produce results which do not vary by more than ±5 percent from the mean of the three injections.

4.2 Calibration Drift. The calibration drift determined from the mean of three injections made at the beginning and end of any run or series of runs within a 24-hour period shall not exceed ±5 percent.

4.3 System Calibration Accuracy. Losses through the sample transport system must be measured and a correction factor developed to adjust the calibration accuracy to 100 percent.

5. *Apparatus*

5.1. Sampling.

5.1.1 Probe.

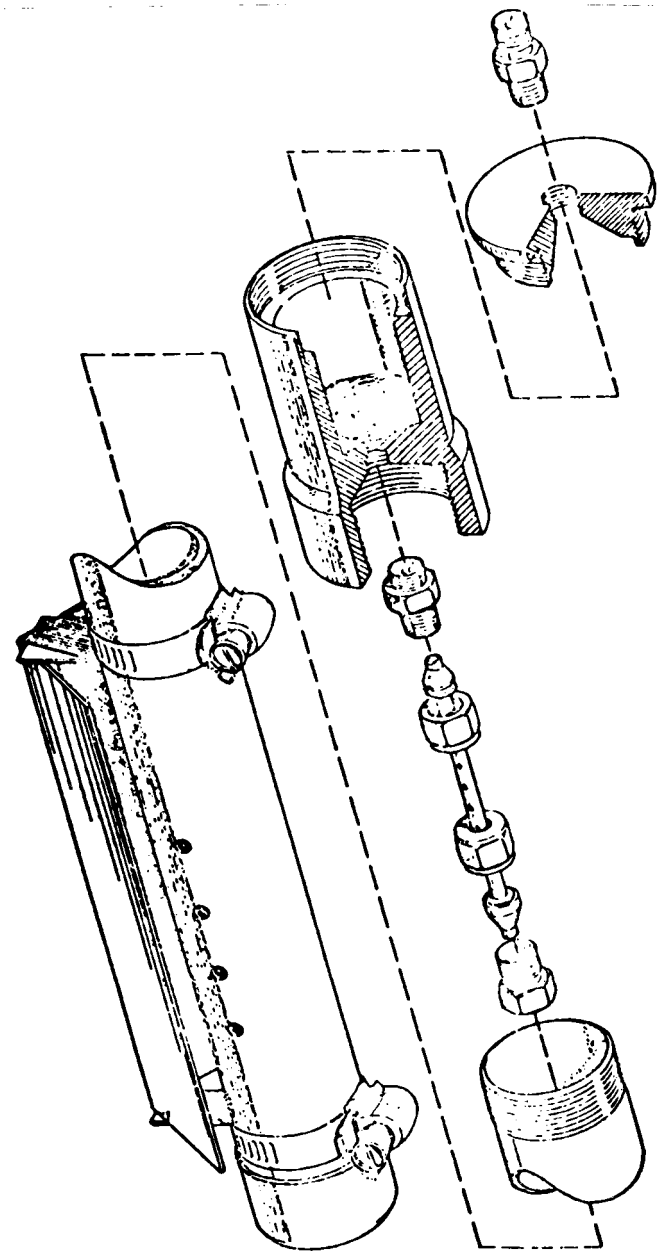

Figure 16-1. Probe used for sample gas containing high particulate loadings.

5.1.1.1 Teflon or Teflon-lined stainless steel. The probe must be heated to prevent moisture condensation. It shall be designed to allow calibration gas to enter the probe at or near the sample point entry. Any portion of the probe that contacts the stack gas must be heated to prevent moisture condensation.

5.1.1.2 Figure 16–1 illustrates the probe used in lime kilns and other sources where significant amounts of particulate matter are present. The probe is designed with the deflector shield placed between the sample and the gas inlet holes to reduce clogging of the filter and possible adsorption of sample gas. As an alternative, the probe described in Section 2.1.1 of Methods 16A having a nozzle directed away from the gas stream may be used at sources having significant amounts of particulate matter.

5.1.1.3 NOTE: Mention of trade names or specific products does not constitute an endorsement by the Environmental Protection Agency.

5.1.2 Particulate Filter. 50-mm Teflon filter holder and a 1- to 2-micron porosity Teflon filter (available through Savillex Corporation, 5325 Highway 101, Minnetonka, Minnesota 55343). The filter holder must be maintained in a hot box at a temperature of at least 120 °C (248 °F).

5.1.3 SO_2 Scrubber.

5.1.3.1 Three 300-ml Teflon segmented impingers connected in series with flexible, thick-walled, Teflon tubing. (Impinger parts and tubing available through Savillex.) The first two impingers contain 100 ml of citrate buffer and the third impinger is initially dry. The tip of the tube inserted into the solution should be constricted to less than 3-mm (⅛-in.) ID and should be immersed to a depth of at least 5 cm (2 in.). Immerse the impingers in an ice water bath and maintain near 0 °C. The scrubber solution will normally last for a 3-hour run before needing replacement. This will depend upon the effects of moisture and particulate matter on the solution strength and pH.

5.1.3.2 Connections between the probe, particulate filter, and SO_2 scrubber shall be made of Teflon and as short in length as possible. All portions of the probe, particulate filter, and connections prior to the SO_2 scrubber (or alternative point of moisture removal) shall be maintained at a temperature of at least 120 °C (248 °F).

5.1.4 Sample Line. Teflon, no greater than 1.3-cm (½-in.) ID. Alternative materials, such as virgin Nylon, may be used provided the line loss test is acceptable.

5.1.5 Sample Pump. The sample pump shall be leakless Teflon-coated diaphragm type or equivalent.

5.2 Dilution System. Needed only for high sample concentrations. The dilution system must be constructed such that all sample contacts are made of Teflon, glass, or stainless steel.

5.3 Gas Chromatograph. The gas chromatograph must have at least the following components:

5.3.1 Oven. Capable of maintaining the separation column at the proper operating temperature ±1 °C.

5.3.2 Temperature Gauge. To monitor column oven, detector, and exhaust temperature ±1 °C.

5.3.3 Flow System. Gas metering system to measure sample, fuel, combustion gas, and carrier gas flows.

5.3.4 Flame Photometric Detector.

5.3.4.1 Electrometer. Capable of full scale amplification of linear ranges of 10^{-9} to 10^{-4} amperes full scale.

5.3.4.2 Power Supply. Capable of delivering up to 750 volts.

5.3.4.3 Recorder. Compatible with the output voltage range of the electrometer.

5.3.4.4 Rotary Gas Valves. Multiport Teflon-lined valves equipped with sample loop. Sample loop volumes shall be chosen to provide the needed analytical range. Teflon tubing and fittings shall be used throughout to present an inert surface for sample gas. The gas chromatograph shall be calibrated with the sample loop used for sample analysis.

5.4 Gas Chromatogram Columns. The column system must be demonstrated to be capable of resolving the four major reduced sulfur compounds: H_2S, MeSH, DMS, and DMDS. It must also demonstrate freedom from known interferences.

To demonstrate that adequate resolution has been achieved, the tester must submit a chromatogram of a calibration gas containing all four of the TRS compounds in the concentration range of the applicable standard. Adequate resolution will be defined as base line separation of adjacent peaks when the amplifier attenuation is set so that the smaller peak is at least 50 percent of full scale. Baseline separation is defined as a return to zero ±5 percent in the interval between peaks. Systems not meeting this criteria may be considered alternate methods subject to the approval of the Administrator.

5.5 Calibration System. The calibration system must contain the following components. (Figure 16–2)

5.5.1 Tube Chamber. Chamber of glass or Teflon of sufficient dimensions to house permeation tubes.

5.5.2 Flow System. To measure air flow over permeation tubes at ±2 percent. Each flowmeter shall be calibrated after a complete test series with a wet test meter. If the flow measuring device differs from the wet test meter by 5 percent, the completed test shall be discarded. Alternatively, the tester may elect to use the flow data that would yield the lower flow measurement. Calibration with a wet test meter before a test is optional. Flow over the permeation device may also be determined using a soap bubble flowmeter.

5.5.3 Constant Temperature Bath. Device capable of maintaining the permeation tubes at the calibration temperature within ±0.1 °C.

5.5.4 Temperature Gauge. Thermometer or equivalent to monitor bath temperature within ±1 °C.

6. *Reagents*

6.1 Fuel. Hydrogen (H_2), prepurified grade or better.

6.2 Combustion Gas. Oxygen (O_2) or air, research purity or better.

6.3 Carrier Gas. Prepurified grade or better.

6.4 Diluent (If required). Air containing less than 50 ppb total sulfur compounds and less than 10 ppm each of moisture and total hydrocarbons.

6.5 Calibration Gases. Permeation tubes, one each of H_2S, MeSH, DMS, and DMDS, gravimetrically calibrated and certified at some convenient operating temperature. These tubes consist of hermetically sealed FEP Teflon tubing in which a liquified gaseous substance is enclosed. The enclosed gas permeates through the tubing wall at a constant rate. When the temperature is constant, calibration gases covering a wide range of known concentrations can be generated by varying and accurately measuring the flow rate of diluent gas passing over the tubes. These calibration gases are used to calibrate the GC/FPD system and the dilution system.

6.6 Citrate Buffer. Dissolve 300 grams of potassium citrate and 41 grams of anhydrous citric acid in 1 liter of deionized water. 284 grams of sodium citrate may be substituted for the potassium citrate. Adjust the pH to between 5.4 and 5.6 with potassium citrate or citric acid, as required.

6.7 Sample Line Loss Gas (Optional). As an alternative to permeation gas, H_2S cylinder gas may be used for the sample line loss test. The gas shall be calibrated against permeation devices having known permeation rates or by the procedure in Section 7 of Method 16A.

7. *Pretest Procedures*

The following procedures are optional but would be helpful in preventing any problem which might occur later and invalidate the entire test.

7.1 After the complete measurement system has been set up at the site and deemed to be operational, the following procedures should be completed before sampling is initiated.

7.1.1 Leak Test. Appropriate leak test procedures should be employed to verify the integrity of all components, sample lines, and connections. The following leak test procedure is suggested: For components upstream of the sample pump, attach the probe end of the sample line to a manometer or vacuum gauge, start the pump and pull greater than 50 mm (2 in.) Hg vacuum, close off the pump outlet, and then stop the pump and ascertain that there is no leak for 1 minute. For components after the pump, apply a slight positive pressure and check for leaks by applying a liquid (detergent in water, for example) at each joint. Bubbling indicates the presence of a leak. As an alternative to the initial leak-test, the sample line loss test described in Section 10.1 may be performed to verify the integrity of components.

7.1.2 System Performance. Since the complete system is calibrated following each test, the precise calibration of each component is not critical. However, these components should be verified to be operating properly. This verification can be performed by observing the response of flowmeters or of the GC output to changes in flow rates or calibration gas concentrations and ascertaining the response to be within predicted limits. In any component, or if the complete system fails to respond in a normal and predictable manner, the source of the discrepancy should be identified and corrected before proceeding.

8. *Calibration*

Prior to any sampling run, calibrate the system using the following procedures. (If more than one run is performed during any 24-hour period, a calibration need not be performed prior to the second and any subsequent runs. The calibration must, however, be verified as prescribed in Section 10, after the last run made within the 24-hour period.)

8.1 General Considerations. This section outlines steps to be followed for use of the GC/FPD and the dilution system (if applicable). The procedure does not include detailed instructions because the operation of these systems is complex, and it requires an understanding of the individual system being used. Each system should include a written operating manual describing in detail the operating procedures associated with each component in the measurement system. In addition, the operator should be familiar with the operating principles of the components, particularly the GC/FPD. The citations in the Bibliography at the end of this method are recommended for review for this purpose.

8.2 Calibration Procedure. Insert the permeation tubes into the tube chamber. Check the bath temperature to assure agreement with the calibration temperature of the tubes within ±0.1 °C. Allow 24 hours for the tubes to equilibrate. Alternatively equilibration may be verified by injecting samples of calibration gas at 1-hour intervals. The permeation tubes can be assumed to have reached equilibrium when consecutive hourly samples agree within the precision limits of Section 4.1.

Vary the amount of air flowing over the tubes to produce the desired concentrations for calibrating the analytical and dilution systems. The air flow across the tubes must at all times exceed the flow requirement of the analytical systems. The concentration in

parts per million generated by a tube containing a specific permeant can be calculated as follows:

$$C = K\frac{P_r}{ML} \qquad \text{Eq. 16-1}$$

Where:

C=Concentration of permeant produced in ppm.

P_r=Permeation rate of the tube in µg/min.

M=Molecular weight of the permeant (g/g-mole).

L=Flow rate, 1/min, of air over permeant @ 20 °C, 760 mm Hg.

K=Gas constant at 20 °C and 760 mm Hg=24.04 1/g mole.

8.3 Calibration of Analysis System. Generate a series of three or more known concentrations spanning the linear range of the FPD (approximately 0.5 to 10 ppm for a 1-ml sample) for each of the four major sulfur compounds. Inject these standards into the GC/FPD analyzer and monitor the responses. Three injects for each concentration must not vary by more than 5 percent from the mean of the three injections. Failure to attain this precision is an indication of a problem in the calibration or analytical system. Any such problem must be identified and corrected before proceeding.

8.4 Calibration Curves. Plot the GC/FPD response in current (amperes) versus their causative concentrations in ppm on log-log coordinate graph paper for each sulfur compound. Alternatively, a least squares equation may be generated from the calibration data. Alternatively, a least squares equation may be generated from the calibration data using concentrations versus the appropriate instrument response units.

9. *Sampling and Analysis Procedure*

9.1 Sampling. Insert the sampling probe into the test port making certain that no dilution air enters the stack through the port. Begin sampling. Condition the entire system with sample for a minimum of 15 minutes prior to commencing analysis.

9.2 Analysis. Aliquots of sample are injected into the GC/FPD analyzer for analysis.

9.2.1 Sample Run. A sample run is composed of 16 individual analyses (injects) performed over a period of not less than 3 hours or more than 6 hours.

9.2.2 Observation for Clogging of Probe or Filter. If reductions in sample concentrations are observed during a sample run that cannot be explained by process conditions, the sampling must be interrupted to determine if the probe or filter is clogged with particulate matter. If either is found to be clogged, the test must be stopped and the results up to that point discarded. Testing may resume after cleaning or replacing the probe and filter. After each run, the probe and filter shall be inspected and, if necessary, replaced.

10. *Post-Test Procedures*

10.1 Sample line loss. A known concentration of hydrogen sulfide at the level of the applicable standard, ±20 percent, must be introduced into the sampling system at the opening of the probe in sufficient quantities to ensure that there is an excess of sample which must be vented to the atmosphere. The sample must be transported through the entire sampling system to the measurement system in the normal manner. (See figure 16–1). The resulting measured concentration should be compared to the known value to determine the sampling system loss.

For sampling losses greater than 20 percent in a sample run, the sample run is not to be used when determining the arithmetic mean of the performance test. For sampling losses of 0–20 percent, the sample concentration must be corrected by dividing the sample concentration by the fraction of recovery. The fraction of recovery is equal to one minus the ratio of the measured concentration to the known concentration of hydrogen sulfide in the sample line loss procedure. The known gas sample may be generated using permeation tubes. Alternatively, cylinders of hydrogen sulfide mixed in nitrogen and certified according to section 6.7 may be used. The optional pretest procedures provide a good guideline for determining if there are leaks in the sampling system.

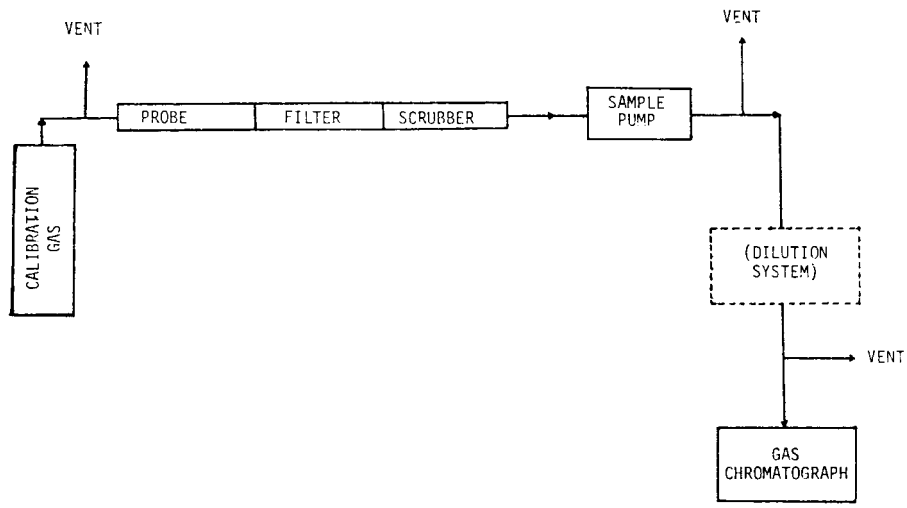

Figure 16-2. Determination of sample line loss.

10.2 Recalibration. After each run, or after a series of runs made within a 24-hour period, perform a partial recalibration using the procedures in Section 8. Only H_2S (or other calibration gas) need be used to recalibrate the GC/FPD analysis system (Section 8.3).

10.3 Determination of Calibration Drift. Compare the calibration curves obtained prior to the runs, to the calibration curves obtained under Section 10.2. The calibration drift should not exceed the limits set forth in Section 4.2. If the drift exceeds this limit, the intervening run or runs should be considered not valid. The tester, however, may instead have the option of choosing the calibration data set which would give the highest sample values.

11. *Calculations*

11.1 Determine the concentrations of each reduced sulfur compound detected directly from the calibration curves. Alternatively, the concentrations may be calculated using the equation for the least squares line.

11.2 Calculation of TRS. Total reduced sulfur will be determined for each analysis made by summing the concentrations of each reduced sulfur compound resolved during a given analysis.

$$TRS=\Sigma(H_2S, MeSH, DMS, 2DMDS)d \qquad \text{Eq. 16–2}$$

Where:

TRS=Total reduced sulfur in ppm, dry basis.
H_2S=Hydrogen sulfide, ppm.
MeSH=Methyl mercaptan, ppm.
DMS=Dimethyl sulfide, ppm.
DMDS=Dimethyl disulfide, ppm.
d=Dilution factor, dimensionless.

11.3 Average TRS. The average TRS will be determined as follows:

$$\text{Average TRS} = \frac{\sum_{i=1}^{N} TRS_i}{N(1-B_{WO})}$$

Where:

Average TRS=Average total reduced sulfur in ppm, dry basis.
TRS_i=Total reduced sulfur in ppm as determined by Equation 16–2.
N=Number of samples.
B_{wo}=Fraction of volume of water vapor in the gas stream as determined by reference Method 4—Determination of Moisture in Stack Gases.

11.4 Average Concentration of Individual Reduced Sulfur Compounds.

$$C = \frac{\sum_{i=1}^{N} S_i}{N} \qquad \text{Eq. 16-4}$$

Where:

S_i=Concentration of any reduced sulfur compound from the ith sample injection, ppm.

C=Average concentration of any one of the reduced sulfur compounds for the entire run, ppm.

N=Number of injections in any run period.

12. *Bibliography*

12.1 O'Keeffe, A. E. and G. C. Ortman. ''Primary Standards for Trace Gas Analysis.'' Analytical Chemical Journal, 38,760 (1966).

12.2 Stevens, R. K., A. E. O'Keeffe, and G. C. Ortman. ''Absolute Calibration of a Flame Photometric Detector to Volatile Sulfur Compounds at Sub-Part-Per-Million Levels.'' Environmental Science and Technology, 3:7 (July, 1969).

12.3 Mulik, J. D., R. K. Stevens, and R. Baumgardner. ''An Analytical System Designed to Measure Multiple Malodorous Compounds Related to Kraft Mill Activities.'' Presented at the 12th Conference on Methods in Air Pollution and Industrial Hygiene Studies, University of Southern California, Los Angeles, CA. April 6–8, 1971.

12.4 Devonald, R. H., R. S. Serenius, and A. D. McIntyre. ''Evaluation of the Flame Photometric Detector for Analysis of Sulfur Compounds.'' Pulp and Paper Magazine of Canada, 73,3 (March, 1972).

12.5 Grimley, K. W., W. S. Smith, and R. M. Martin. ''The Use of a Dynamic Dilution System in the Conditioning of Stack Gases for Automated Analysis by a Mobile Sampling Van.'' Presented at the 63rd Annual APCA Meeting in St. Louis, MO. June 14–19, 1970.

12.6 General Reference. Standard Methods of Chemical Analysis Volume III A and B Instrumental Methods. Sixth Edition. Van Nostrand Reinhold Co.

METHOD 16A—DETERMINATION OF TOTAL REDUCED SULFUR EMISSIONS FROM STATIONARY SOURCES (IMPINGER TECHNIQUE)

1. *Applicability, Principle, Interferences, Precision, and Bias*

1.1 Applicability. This method is applicable to the determination of total reduced sulfur (TRS) emissions from recovery boilers, lime kilns, and smelt dissolving tanks at kraft pulp mills, and from other sources when specified in an applicable subpart of the regulations. The TRS compounds include hydrogen sulfide, methyl mercaptan, dimethyl sulfide, and dimethyl disulfide.

The flue gas must contain at least 1 percent oxygen for complete oxidation of all TRS to sulfur dioxide (SO_2). The lower detectable limit is 0.1 ppm SO_2 when sampling at 2 liters/min for 3 hours or 0.3 ppm when sampling at 2 liters/min for 1 hour. The upper concentration limit of the method exceeds TRS levels generally encountered at kraft pulp mills.

1.2 Principle. An integrated gas sample is extracted from the stack. SO_2 is removed selectively from the sample using a citrate buffer solution. TRS compounds are then thermally oxidized to SO_2, collected in hydrogen peroxide as sulfate, and analyzed by the Method 6 barium-thorin titration procedure.

1.3 Interferences. TRS compounds other than those regulated by the emission standards, if present, may be measured by this method. Therefore, carbonyl sulfide, which is partially oxidized to SO_2 and may be present in a lime kiln exit stack, would be a positive interferent.

Particulate matter from the lime kiln stack gas (primarily calcium carbonate) can cause a negative bias if it is allowed to enter the citrate scrubber; the particulate matter will cause the pH to rise and H_2S to be absorbed prior to oxidation. Furthermore, if the calcium carbonate enters the hydrogen peroxide impingers, the calcium will precipitate sulfate ion. Proper use of the particulate filter described in Section 2.1.3 will eliminate this interference.

1.4 Precision and Bias. Relative standard deviations of 2.0 and 2.6 percent were obtained when sampling a recovery boiler for 1 and 3 hours, respectively.

In a separate study at a recovery boiler, Method 16A was found to be unbiased relative to Method 16. Comparison of Method 16A with Method 16 at a lime kiln indicated that there was no bias in Method 16A. However, instability of the source emissions adversely affected the comparison. The precision of Method 16A at the lime kiln was similar to that obtained at the recovery boiler.

Relative standard deviations of 2.7 and 7.7 percent have been obtained for system performance checks.

2. *Apparatus*

2.1 Sampling. The sampling train is shown in Figure 16A–1 and component parts are discussed below. Modifications to this sampling train are acceptable provided the system performance check (Section 4.3) is met.

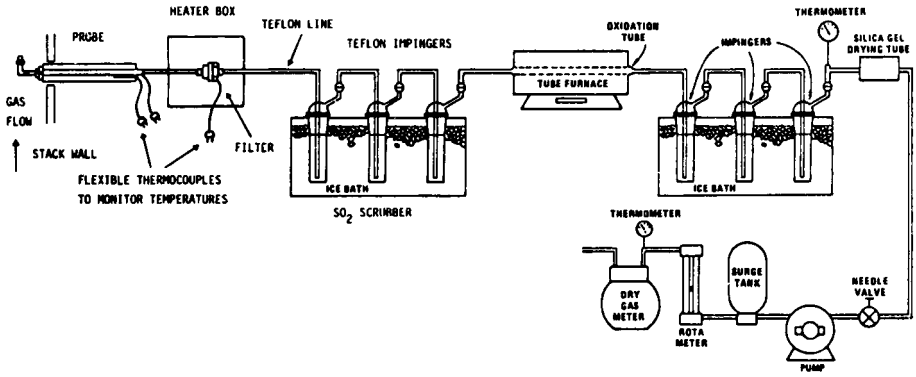

Figure 16A-1. Sampling Train

2.1.1 Probe. Teflon (mention of trade names or specific products does not constitute endorsement by the U.S. Environmental Protection Agency) tubing, 0.6-cm (¼-in.) diameter, sequentially wrapped with heat-resistant fiber strips, a rubberized heat tape (plug at one end), and heat-resistant adhesive tape. A flexible thermocouple or other suitable temperature measuring device should be placed between the Teflon tubing and the fiber strips so that the temperature can be monitored to prevent softening of the probe. The probe should be sheathed in stainless steel to provide in-stack rigidity. A series of bored-out stainless steel fittings placed at the front of the sheath will prevent moisture and particulate from entering between the probe and sheath. A 0.6-cm (¼-in.) Teflon elbow (bored out) should be attached to the inlet of the probe, and a 2.54-cm (1-in.) piece of Teflon tubing should be attached at the open end of the elbow to permit the opening of the probe to be turned away from the particulate stream; this will reduce the amount of particulate drawn into the sampling train. The sampling probe is depicted in Figure 16A–2.

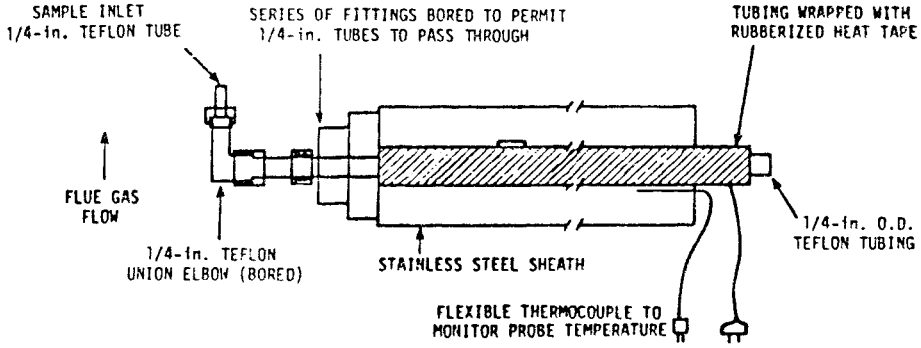

Figure 16A-2. Angled sampling probe

2.1.2 Probe Brush. Nylon bristle brush with handle inserted into a 3.2-mm (⅛-in.) Teflon tubing. The Teflon tubing should be long enough to pass the brush through the length of the probe.

2.1.3 Particulate Filter. 50-mm Teflon filter holder and a 1- to 2-μ porosity, Teflon filter (available through Savillex Corporation, 5325 Highway 101, Minnetonka, Minnesota 55343). The filter holder must be maintained in a hot box at a temperature sufficient to prevent moisture condensation. A temperature of 121 °C (250 °F) was found to be sufficient when testing a lime kiln under subfreezing ambient conditions.

2.1.4 SO_2 Scrubber. Three 300-ml Teflon segmented impingers connected in series with flexible, thick-walled, Teflon tubing. (Impinger parts and tubing available through Savillex.) The first two impingers contain 100 ml of citrate buffer and the third impinger is initially dry. The tip of the tube inserted into the solution should be constricted to less than 3 mm (⅛ in.) ID and should be immersed to a depth of at least 5 cm (2 in.).

2.1.5 Combustion Tube. Quartz glass tubing with an expanded combustion chamber 2.54 cm (1 in.) in diameter and at least 30.5 cm (12 in.) long. The tube ends should have an outside diameter of 0.6 cm (¼ in.) and be at least 15.3 cm (6 in.) long. This length is necessary to maintain the quartz-glass connector at ambient temperature and thereby avoid leaks. Alternatively, the outlet may be constructed with a 90-degree glass elbow and socket that would fit directly onto the inlet of the first peroxide impinger.

2.1.6 Furnace. A furnace of sufficient size to enclose the combustion chamber of the combustion tube with a temperature regulator capable of maintaining the temperature at 800±100 °C. The furnace operating temperature should be checked with a thermocouple to ensure accuracy.

2.1.7 Peroxide Impingers, Stopcock Grease, Thermometer, Drying Tube, Valve, Pump, Barometer, and Vacuum Gauge. Same as in Method 6, Sections 2.1.2, 2.1.4, 2.1.6, 2.1.7, 2.1.8, 2.1.11, and 2.1.12, respectively.

2.1.8 Rate Meter. Rotameter, or equivalent, accurate to within 5 percent at the selected flow rate of 2 liters/min.

2.1.9 Volume Meter. Dry gas meter capable of measuring the sample volume under the sampling conditions of 2 liters/min with an accuracy of ±2 percent.

2.1.10 Polyethylene Bottles. 250-ml bottles for hydrogen peroxide solution recovery.

2.2 Sample Preparation and Analysis. Same as in Method 6, Section 2.3, except a 10-ml buret with 0.05-ml graduations is required and the spectrophotometer is not needed.

3. *Reagents*

Unless otherwise indicated, all reagents must conform to the specifications established by the Committee on Analytical Reagents of the American Chemical Society. When such specifications are not available, the best available grade shall be used.

3.1 Sampling. The following reagents are needed:

3.1.1 Water. Same as in Method 6, Section 3.1.1.

3.1.2 Citrate Buffer. 300 g of potassium citrate (or 284 g of sodium citrate) and 41 g of anhydrous citric acid dissolved in 1 liter of water (200 ml is needed per test). Adjust the pH to between 5.4 and 5.6 with potassium citrate or citric acid, as required.

3.1.3 Hydrogen Peroxide, 3 percent. Same as in Method 6, Section 3.1.3 (40 ml is needed per sample).

3.1.4 Recovery Check Gas. Hydrogen sulfide (100 ppm or less) in nitrogen, stored in aluminum cylinders. Verify the concentration by Method 11 or by gas chromatography where the instrument is calibrated with an H_2S permeation tube as described below. For Method 11, the standard deviation should not exceed 5 percent on at least three 20-minute runs.

Alternatively, hydrogen sulfide recovery gas generated from a permeation device gravimetrically calibrated and certified at some convenient operating temperature may be used. The permeation rate of the device must be such that at a dilution gas flow rate of 3 liters/min, an H_2S concentration in the range of the stack gas or within 20 percent of the standard can be generated.

3.1.5 Combustion Gas. Gas containing less than 50 ppb reduced sulfur compounds and less than 10 ppm total hydrocarbons. The gas may be generated from a clean-air system that purifies ambient air and consists of the following components: Diaphragm pump, silica gel drying tube, activated charcoal tube, and flow rate measuring device. Flow from a compressed air cylinder is also acceptable.

3.2 Sample Recovery and Analysis. Same as in Method 6, Sections 3.2.1 and 3.3.

4. *Procedure*

4.1 Sampling. Before any source sampling is done, conduct two 30-minute system performance checks in the field as detailed in Section 4.3 to validate the sampling train components and procedure (optional).

4.1.1 Preparation of Collection Train. For the SO_2 scrubber, measure 100 ml of citrate buffer into the first and second impingers; leave the third impinger empty. Immerse the impingers in an ice bath, and locate them as close as possible to the filter heat box. The connecting tubing should be free of loops. Maintain the probe and filter temperatures sufficiently high to prevent moisture condensation, and monitor with a suitable temperature indicator.

For the Method 6 part of the train, measure 20 ml of 3 percent hydrogen peroxide into

the first and second midget impingers. Leave the third midget impinger empty, and place silica gel in the fourth midget impinger. Alternatively, a silica gel drying tube may be used in place of the fourth impinger. Maintain the oxidation furnace at 800±100 °C. Place crushed ice and water around all impingers.

4.1.2 Citrate Scrubber Conditioning Procedure. Condition the citrate buffer scrubbing solution by pulling stack gas through the Teflon impingers and bypassing all other sampling train components. A purge rate of 2 liters/min for 10 minutes has been found to be sufficient to obtain equilibrium. After the citrate scrubber has been conditioned, assemble the sampling train, and conduct (optional) a leak-check as described in Method 6, Section 4.1.2.

4.1.3 Sample Collection. Same as in Method 6, Section 4.1.3, except the sampling rate is 2 liters/min (± 10 percent) for 1 or 3 hours. After the sample is collected, remove the probe from the stack, and conduct (mandatory) a post-test leak check as described in Method 6, Section 4.1.2. The 15-minute purge of the train following collection should not be performed. After each 3-hour test run (or after three 1-hour samples), conduct one system performance check (see Section 4.3) to determine the reduced sulfur recovery efficiency through the sampling train. After this system performance check and before the next test run, rinse and brush the probe with water, replace the filter, and change the citrate scrubber (recommended but optional).

In Method 16, a test run is composed of 16 individual analyses (injects) performed over a period of not less than 3 hours or more than 6 hours. For Method 16A to be consistent with Method 16, the following may be used to obtain a test run: (1) collect three 60-minute samples or (2) collect one 3-hour sample. (Three test runs constitute a test.)

4.2 Sample Recovery. Disconnect the impingers. Quantitatively transfer the contents of the midget impingers of the Method 6 part of the train into a leak-free polyethylene bottle for shipment. Rinse the three midget impingers and the connecting tubes with water and add the washings to the same storage container. Mark the fluid level. Seal and identify the sample container.

4.3 System Performance Check. A system performance check is done (1) to validate the sampling train components and procedure (prior to testing; optional) and (2) to validate a test run (after a run). Perform a check in the field prior to testing consisting of a least two samples (optional), and perform an additional check after each 3-hour run or after three 1-hour samples (mandatory).

The checks involve sampling a known concentration of H_2S and comparing the analyzed concentration with the known concentration. Mix the H_2S recovery gas (Section 3.1.4) and combustion gas in a dilution system such as is shown in Figure 16A–3. Adjust the flow rates to generate an H_2S concentration in the range of the stack gas or within 20 percent of the applicable standard and an oxygen concentration greater than 1 percent at a total flow rate of at least 2.5 liters/min. Use Equation 16A–3 to calculate the concentration of recovery gas generated. Calibrate the flow rate from both sources with a soap bubble flow tube so that the diluted concentration of H_2S can be accurately calculated. Collect 30-minute samples, and analyze in the normal manner (as discussed in Section 4.1.3). Collect the sample through the probe of the sampling train using a manifold or some other suitable device that will ensure extraction of a representative sample.

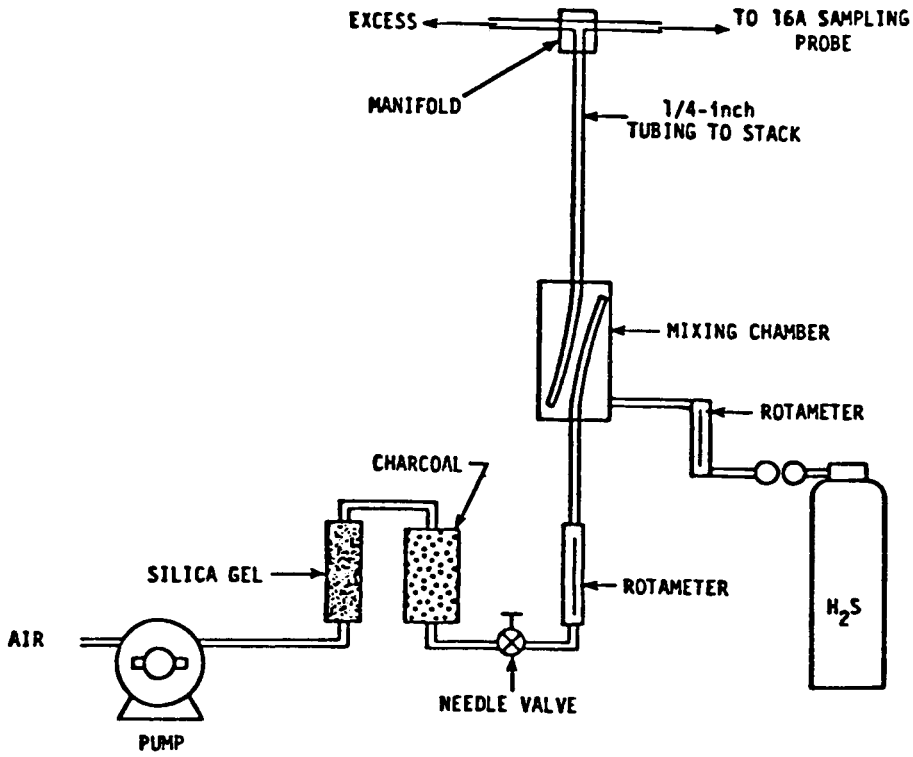

Figure 16A-3. Recovery gas dilution system.

The recovery check must be performed in the field prior to replacing the SO_2 scrubber and particulate filter and before the probe is cleaned. A sample recovery of 100 ±20 percent must be obtained for the data to be valid and should be reported with the emission data, but should not be used to correct the data. However, if the performance check results do not affect the compliance or noncompliance status of the affected facility, the Administrator may decide to accept the results of the compliance test. Use Equation 16A–4 to calculate the recovery efficiency.

4.4 Sample Analysis. Same as in Method 6, Section 4.3, except for 1-hour sampling, take a 40-ml aliquot, add 160 ml of 100 percent isopropanol, and four drops of thorin. Analyze an EPA SO_2 field audit sample with each set of samples. Such audit samples are available from the Source Branch, Quality Assurance Division, Environmental Monitoring Systems Laboratory, U. S. Environmental Protection Agency, Research Triangle Park, North Carolina 27711.

5. *Calibration*

5.1 Metering System, Thermometers, Rotameters, Barometers, and Barium Perchlorate Solution. Calibration procedures are presented in Method 6, Sections 5.1 through 5.5.

6. *Calculations*

In the calculations, at least one extra decimal figure should be retained beyond that of the acquired data. Figures should be rounded off after final calculations.

6.1 Nomenclature.

C_{TRS}=Concentration of TRS as SO_2, dry basis corrected to standard conditions, ppm.

C_{RG}=Concentration of recovery gas generated, ppm.

C_{H2S}=Verified concentration of H_2S recovery gas.

N=Normality of barium perchlorate titrant, milliequivalents/ml.

P_{bar}=Barometric pressure at exit orifice of the dry gas meter, mm Hg (in. Hg).

P_{std}=Standard absolute pressure, 760 mm Hg (29.92 in. Hg).

Q_{H2S}=Calibrated flow rate of H_2S recovery gas, liters/min.

Q_{CG}=Calibrated flow rate of combustion gas, liters/min.

R=Recovery efficiency for the system performance check, percent.

T_m=Average dry gas meter absolute temperature, °K (°R).

T_{std}=Standard absolute temperature, 293 °K, (528 °R).

V_a=Volume of sample aliquot titrated, ml.

V_m=Dry gas volume as measured by the dry gas meter, liters (dcf).

$V_{m(std)}$=Dry gas volume measured by the dry gas meter, corrected to standard conditions, liters (dscf).

V_{soln}=Total volume of solution in which the sulfur dioxide sample is contained, 100 ml.

V_t=Volume of barium perchlorate titrant used for the sample, ml (average of replicate titrations).

V_{tb}=Volume of barium perchlorate titrant used for the blank, ml.

Y=Dry gas meter calibration factor.

32.03=Equivalent weight of sulfur dioxide, mg/meq.

6.2 Dry Sample Gas Volume, Corrected to Standard Conditions.

$$V_{m(std)} = V_m Y \frac{T_{std}}{T_m} \frac{P_{bar}}{P_{std}} = K_1 Y \frac{V_m - P_{bar}}{T_m} \qquad \text{Eq. 16A-1}$$

Where: K_1=0.3858 °K/mm Hg for metric units.

6.3 Concentration of TRS as ppm SO_2.

$$C_{TRS(ppm)} = \frac{K_2 (V_t - V_{tb}) N (V_{soln}/V_a)}{V_{m(std)}} \qquad \text{Eq. 16A-2}$$

Where:

$$K_2 = \frac{32.03\text{mg}}{\text{meq}} \frac{24.05\,\text{liters}}{\text{mole}} \frac{1\,\text{mole}}{64.06\text{g}} \frac{1\text{g}}{1000\text{mg}} \frac{1000\,\text{ml}}{\text{liter}} \frac{1000\mu\text{l}}{1\,\text{ml}} = 12025 \frac{\mu\text{l}}{\text{meq}}$$

6.4 Concentration of Recovery Gas Generated in the System Performance Check.

$$C_{RG} = \frac{(Q_{H2S})(C_{H2S})}{Q_{H2S} + Q_{CG}} \qquad \text{Eq. 16A-3}$$

6.5 Recovery Efficiency for the System Performance Check.

$$R = \frac{C_{TRS}}{C_{RG}} \times 100 \qquad \text{Eq. 16A-4}$$

7. *Alternative Procedures*

7.1 *Determination of H_2S Content in Cylinder Gases.* As an alternative to the procedures specified in section 3.1.4, the following procedure may be used to verify the concentration of the recovery check gas. The H_2S is collected from the calibration gas cylinder and is absorbed in zinc acetate solution to form zinc sulfide. The latter compound is then measured iodometrically. The method has been examined in the range of 5 to 1500 ppm. There are no known interferences to this method when used to analyze cylinder gases containing H_2S in nitrogen. Laboratory tests have shown a relative standard deviation of less than 3 percent. The method showed no bias when compared to a gas chromatographic method that used gravimetrically certified permeation tubes for calibration.

7.1.1 *Sampling Apparatus.* The sampling train is shown in Figure 16A–4 and consists of the following components:

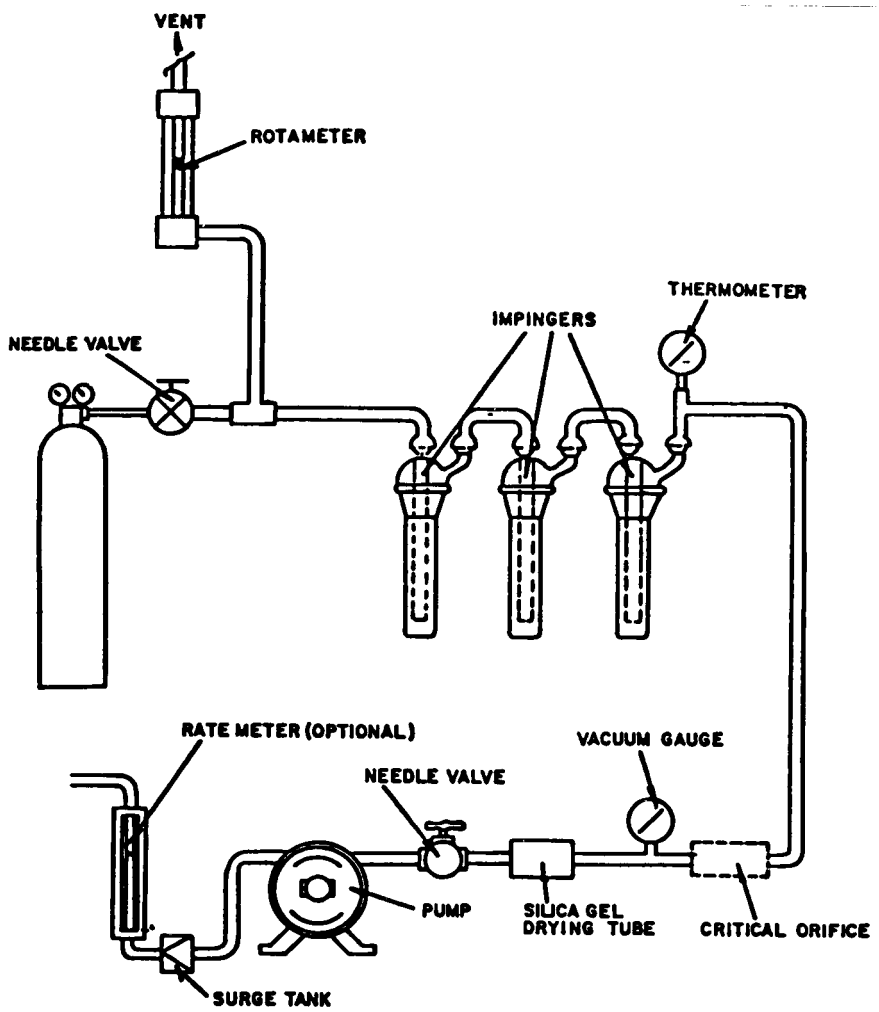

Figure 16A-4. Recovery check gas sampling train.

7.1.1.1 *Sampling Line.* Teflon tubing (¼-in.) to connect the cylinder regulator to the sampling valve.

7.1.1.2 *Needle Valve.* Stainless steel or Teflon needle valve to control the flow rate of gases to the impingers.

7.1.1.3 *Impingers.* Three impingers of approximately 100-ml capacity, constructed to permit the addition of reagents through the gas inlet stem. The impingers shall be connected in series with leak-free glass or Teflon connectors. The impinger bottoms have a standard 24/25 ground-glass fitting. The stems are from standard ¼-in. (0.64-cm) ball joint midget impingers, custom lengthened by about 1 in. When fitted together, the stem end should be approximately ½ in. (1.27-cm) from the bottom (Southern Scientific, Inc., Micanopy, Florida: Set Number S6962–048). The third in-line impinger acts as a drop-out bottle.

7.1.1.4 *Drying Tube,* Flowmeter, and Barometer. Same as in Method 11, Sections 5.1.5, 5.1.8, and 5.1.10.

7.1.1.5 *Cylinder Gas Regulator.* Stainless steel, to reduce the pressure of the gas stream entering the Teflon sampling line to a safe level.

7.1.1.6 *Soap Bubble Meter.* Calibrated for 100 and 500 ml, or two separate bubble meters.

7.1.1.7 *Critical Orifice.* For volume and rate measurements. The critical orifice may be fabricated according to Section 7.1.4.3 and must be calibrated as specified in Section 7.1.8.4.

7.1.1.8 *Graduated Cylinder.* 50-ml size.

7.1.1.9 *Volumetric Flask.* 1-liter size.

7.1.1.10 *Volumetric Pipette.* 15-ml size.

7.1.1.11 *Vacuum Gauge.* Minimum 20-in. Hg capacity.

7.1.1.12 *Stopwatch.*

7.1.2 *Sample Recovery and Analysis Apparatus.*

7.1.2.1 *Erlenmeyer Flasks.* 125- and 250-ml sizes.

7.1.2.2 *Pipettes.* 2-, 10-, 20-, and 100-ml volumetric.

7.1.2.3 *Burette.* 50-ml size.

7.1.2.4 *Volumetric Flask.* 1-liter size.

7.1.2.5 *Graduated Cylinder.* 50-ml size.

7.1.2.6 *Wash Bottle.*

7.1.2.7 *Stirring Plate and Bars.*

7.1.3 *Reagents.* Unless otherwise indicated, all reagents shall conform to the specifications established by the Committee on Analytical Reagents of the American Chemical Society, where such specifications are available. Otherwise, use the best available grade.

7.1.3.1 *Water.* Same as in Method 11, Section 6.1.3.

7.1.3.2 *Zinc Acetate Absorbing Solution.* Dissolve 20 g zinc acetate in water and dilute to 1 liter.

7.1.3.3 *Potassium Bi-iodate [$KH(IO_3)_2$ Solution, Standard 0.100 N.* Dissolve 3.249 g anhydrous $KH(IO_3)_2$ in water, and dilute to 1 liter.

7.1.3.4 *Sodium Thiosulfate ($Na_2S_20_3$) Solution, Standard 0.1 N.* Same as in Method 11, Section 6.3.1. Standardize according to Section 7.1.8.2.

7.1.3.5 *$Na_2S_20_3$ Solution, Standard 0.01 N.* Pipette 100.0 ml of 0.1 N $Na_2S_20_3$ solution into a 1-liter volumetric flask, and dilute to the mark with water.

7.1.3.6 *Iodine Solution, 0.1 N.* Same as in Method 11, Section 6.2.2.

7.1.3.7 *Standard Iodine Solution, 0.01 N.* Same as in Method 11, Section 6.2.3. Standardize according to Section 7.1.8.3.

7.1.3.8 *Hydrochloric Acid (HCl) Solution, 10 Percent by Weight.* Add 230 ml concentrated HCl (specific gravity 1.19) to 770 ml water.

7.1.3.9 *Starch Indicator Solution.* To 5 g starch (potato, arrowroot, or soluble), add a little cold water, and grind in a mortar to a thin paste. Pour into 1 liter of boiling water, stir, and let settle overnight. Use the clear supernatant. Preserve with 1.25 g salicylic acid, 4 g zinc chloride, or a combination of 4 g sodium propionate and 2 g sodium azide per liter of starch solution. Some commercial starch substitutes are satisfactory.

7.1.4 *Sampling Procedure.*

7.1.4.1 *Selection of Gas Sample Volumes.* This procedure has been validated for estimating the volume of cylinder gas sample needed when the H_2S concentration is in the range of 5 to 1500 ppm. The sample volume ranges were selected in order to ensure a 35 to 60 percent consumption of the 20 ml of 0.01 N iodine (thus ensuring a 0.01 N $Na_2S_2O_3$ titer of approximately 7 to 12 ml). The sample volumes for various H_2S concentrations can be estimated by dividing the approximate ppm-liters desired for a given concentration range by the H_2S concentration stated by the manufacturer.

Approximate cylinder gas H_2S concentration (ppm)	Approximate ppm-liters desired
5 to <30	650
30 to <500	800
500 to <1500	1000

For example, for analyzing a cylinder gas containing approximately 10 ppm H_2S, the optimum sample volume is 65 liters (650 ppm-liters/10 ppm). For analyzing a cylinder gas containing approximately 1000 ppm H_2S, the optimum sample volume is 1 liter (1000 ppm-liters/1000 ppm).

7.1.4.2 *Critical Orifice Flow Rate Selection.* The following table shows the ranges of sample flow rates that are desirable in order to ensure capture of H_2S in the impinger solution. Slight deviations from these ranges will not have an impact on measured concentrations.

Cylinder gas H_2S concentration (ppm)	Critical orifice flow rate (ml/min)
5 to <50 ppm	1500 ± 500
50 to <250 ppm	500 ± 250
250 to <1000 ppm	200 ± 50
<1000 ppm	75 ± 25

7.1.4.3 *Critical Orifice Fabrication.* Critical orifice of desired flow rates may be fabricated by selecting an orifice tube of desired length and connecting 1/16-in. x 1/4-in. (0.16-cm x 0.64-cm) reducing fittings to both ends. The inside diameters and lengths of orifice tubes needed to obtain specific flow rates are shown below.

Tube (in. OD)	Tube (in. ID)	Length (in.)	Flow rate (ml/min)	Altech catalog No.[1]
1/16	0.007	1.2	85	301430
1/16	0.01	3.2	215	300530
1/16	0.01	1.2	350	300530
1/16	0.02	1.2	1400	300230

[1] Altech Associates, 2051 Waukegon Road., Deerfield, Illinois 60015.

7.1.4.4 *Determination of Critical Orifice Approximate Flow Rate.* Connect the critical orifice to the sampling system as shown in Figure 16A–4 but without the H_2S cylinder. Connect a rotameter in the line to the first impinger. Turn on the pump, and adjust the valve to give a reading of about half atmospheric pressure. Observe the rotameter reading. Slowly increase the vacuum until a stable flow rate is reached, and record this as the critical vacuum. The measured flow rate indicates the expected critical flow rate of the orifice. If this flow rate is in the range shown in Section 7.1.4.2, proceed with the critical orifice calibration according to Section 7.1.8.4.

7.1.4.5 *Determination of Approximate Sampling Time.* Determine the approximate sampling time for a cylinder of known concentration. Use the optimum sample volume obtained in Section 7.1.4.1.

$$\text{Approximate sampling time (min)} = \frac{\text{Optimum volume} \times 1000}{\text{Critical orifice flow rate (ml / min)}}$$

7.1.4.6 *Sample Collection.* Connect the Teflon tubing, Teflon tee, and rotameter to the flow control needle valve as shown in Figure 16A–4. Vent the rotameter to an exhaust hood. Plug the open end of the tee. Five to 10 minutes prior to sampling, open the cylinder valve while keeping the flow control needle valve closed. Adjust the delivery pressure to 20 psi. Open the needle valve slowly until the rotameter shows a flow rate approximately 50 to 100 ml above the flow rate of the critical orifice being used in the system.

Place 50 ml of zinc acetate solution in two of the impingers, connect them and the empty third impinger (dropout bottle) and the rest of the equipment as shown in Figure 16A–4. Make sure the ground-glass fittings are tight. The impingers can be easily stabilized by using a small cardboard box in which three holes have been cut, to act as a holder. Connect the Teflon sample line to the first impinger. Cover the impingers with a dark cloth or piece of plastic to protect the absorbing solution from light during sampling.

Record the temperature and barometric pressure. Note the gas flow rate through the rotameter. Open the closed end of the tee. Connect the sampling tube to the tee, ensuring a tight connection. Start the sampling pump and stopwatch simultaneously. Note the decrease in flow rate through the excess flow rotameter. This decrease should equal the known flow rate of the critical orifice being used. Continue sampling for the period determined in Section 7.1.4.5.

When sampling is complete, turn off the pump and stopwatch. Disconnect the sampling line from the tee and plug it. Close the needle valve followed by the cylinder valve. Record the sampling time.

7.1.5 *Blank Analysis.* While the sample is being collected, run a blank as follows: To a 250-ml Erlenmeyer flask, add 100 ml of zinc acetate solution, 20.0 ml. 0.01 N iodine solution, and 2 ml HCl solution. Titrate, while stirring, with 0.01 N $Na_2S_20_3$ until the solution is light yellow. Add starch, and continue titrating until the blue color disappears. Analyze a blank with each sample, as the blank titer has been observed to change over the course of a day.

NOTE: Iodine titration of zinc acetate solutions is difficult to perform because the solution turns slightly white in color near the end point, and the disappearance of the blue color is hard to recognize. In addition, a blue color may reappear in the solution about 30 to 45 seconds after the titration endpoint is reached. This should not be taken to mean the original endpoint was in error. It is recommended that persons conducting this test

perform several titrations to be able to correctly identify the endpoint. The importance of this should be recognized because the results of this analytical procedure are extremely sensitive to errors in titration.

7.1.6 *Sample Analysis.* Sample treatment is similar to the blank treatment. Before detaching the stems from the bottoms of the impingers, add 20.0 ml of 0.01 N iodine solution *through the stems* of the impingers holding the zinc acetate solution, dividing it between the two (add about 15 ml to the first impinger and the rest to the second). Add 2 ml HCl solution through the stems, dividing it as with the iodine. Disconnect the sampling line, and store the impingers for 30 minutes. At the end of 30 minutes, rinse the impinger stems into the impinger bottoms. Titrate the impinger contents with 0.01 N $Na_2S_20_3$. Do not transfer the contents of the impinger to a flask because this may result in a loss of iodine and cause a positive bias.

7.1.7 *Post-test Orifice Calibration.* Conduct a post-test critical orifice calibration run using the calibration procedures outlined in Section 7.1.8.4. If the Q_{std} obtained before and after the test differs by more than 5 percent, void the sample; if not, proceed to perform the calculations.

7.1.8 *Calibrations and Standardizations.*

7.1.8.1 *Rotameter and Barometer.* Same as in Method 11, Sections 8.2.3 and 8.2.4.

7.1.8.2 *$Na_2S_2O_3$* Solution, 0.1 N. Standardize the 0.1 N $Na_2S_2O_3$ solution as follows: To 80 ml water, stirring constantly, add 1 ml concentrated H_2SO_4, 10.0 ml 0.100 N $KH(IO_3)_2$ and 1 g potassium iodide. Titrate immediately with 0.1 N $Na_2S_2O_3$ until the solution is light yellow. Add 3 ml starch solution, and titrate until the blue color just disappears. Repeat the titration until replicate analyses agree within 0.05 ml. Take the average volume of $Na_2S_2O_3$ consumed to calculate the normality to three decimal figures using Equation 16A–5.

7.1.8.3 *Iodine Solution, 0.01 N.* Standardize the 0.01 N iodine solution as follows: Pipet 20.0 ml of 0.01 N iodine solution into a 125-ml Erlenmeyer flask. Titrate with standard 0.01 N $Na_2S_2O_3$ solution until the solution is light yellow. Add 3 ml starch solution, and continue titrating until the blue color just disappears.

If the normality of the iodine tested is not 0.010, add a few ml of 0.1 N iodine solution if it is low, or a few ml of water if it is high, and standardize again. Repeat the titration until replicate values agree within 0.05 ml. Take the average volume to calculate the normality to three decimal figures using Equation 16A–6.

7.1.8.4 *Critical Orifice.* Calibrate the critical orifice using the sampling train shown in Figure 16A–4 but without the H_2S cylinder and vent rotameter. Connect the soap bubble meter to the Teflon line that is connected to the first impinger. Turn on the pump, and adjust the needle valve until the vaccum is higher than the critical vacuum determined in Section 7.1.4.4. Record the time required for gas flow to equal the soap bubble meter volume (use the 100-ml soap bubble meter for gas flow rates below 100 ml/min, otherwise use the 500-ml soap bubble meter). Make three runs, and record the data listed in Table 1. Use these data to calculate the volumetric flow rate of the orifice.

7.1.9 *Calculations.*

7.1.9.1 *Nomenclature.*

B_{wa}=Fraction of water vapor in ambient air during orifice calibration.

C_{H2S}=H_2S concentration in cylinder gas, ppm.

$$K = \text{Conversion factor} = 12025\ \text{ml/eq} = \frac{17.03\ \text{g}}{\text{g}-\text{eq}}\ \frac{24.05\ \text{liters}\ H_2S}{\text{mole}\ H_2S}\ \frac{1\ \text{mole}\ H_2S}{34.06\ \text{g}\ H_2S}\ \frac{10^3\ \text{ml}}{\text{liter}}$$

M_a=Molecular weight of ambient air saturated at impinger temperature, g/g-mole.

M_s=Molecular weight of sample gas (nitrogen) saturated at impinger temperature, g/g-mole. (For tests carried out in a laboratory where the impinger temperature is 25 °C, M_a=28.5 g/g-mole and M_s=27.7 g/g-mole.)

N_I=Normality of standard iodine solution (0.01 N), g-eq/liter.

N_T=Normality of standard $Na_2S_2O_3$ solution (0.01 N), g-eq/liter.

P_{bar}=Barometric pressure, mm Hg.

P_{std}=Standard absolute pressure, 760 mm Hg.

Q_{std}=Volumetric flow rate through critical orifice, liters/min.

Date

Critical orifice ID

Soap bubble meter volume, V_{sb} liters

Time, Θ_{sb}

Run no. 1	min	sec
Run no. 2	min	sec
Run no. 3	min	sec
Average	min	sec

Convert the seconds to fraction of minute:

Time

= min + Sec/60

= min

Barometric pressure, P_{bar} = mm Hg
Ambient temperature, t_{amb} = 273 + °C
= °K

Pump vacuum, = mm Hg. (This should be approximately 0.4 times barometric pressure.)

$$V_{sb(std)} = \frac{(V_{sb})(T_{std})(P_{bar})(10^{-3})}{(T_{amb})(P_{std})} = -----\text{liters}$$

$$Q_{std} = \frac{V_{sb(std)}}{\theta_{sb}} = ------ \text{ liters / min}$$

TABLE 1—CRITICAL ORIFICE CALIBRATION DATA.

$Q_{std, average}$= Average standard flow rate through critical orifice, liters/min.
$Q_{std, before}$= Average standard flow rate through critical orifice determined before H_2S sampling (Section 7.1.4.4), liters/min.
$Q_{std, after}$= Average standard flow rate through critical orifice determined after H_2S sampling (Section 7.1.7), liters/min.
T_{amb} = Absolute ambient temperature, °K.
T_{std} = Standard absolute temperature, 293 °K.
Θ_s = Sampling time, min.
Θ_{sb} = Time for soap bubble meter flow rate measurement, min.
$V_{m(std)}$ = Sample gas volume measured by the critical orifice, corrected to standard conditions, liters.
V_{sb} = Volume of gas as measured by the soap bubble meter, ml.
$V_{sb(std)}$ = Volume of gas as measured by the soap bubble meter, corrected to standard conditions, liters.
V_I = Volume of standard iodine solution (0.01 N) used, ml.
V_T = Volume of standard $Na_2S_2O_3$ solution (0.01 N) used, ml.
V_{TB} = Volume of standard $Na_2S_2O_3$ solution (0.01 N) used for the blank, ml.

7.1.9.2 Normality of Standard $Na_2S_2O_3$ Solution (0.1. N).

$$N_T = \frac{1}{\text{ml } Na_2S_2O_3 \text{ Consumed}} \quad \text{Eq. 16A-5}$$

7.1.9.3 Normality of Standard Iodine Solution (0.01 N).

$$N_I = \frac{N_T V_T}{V_I} \quad \text{Eq. 16A-6}$$

7.1.9.4 Sample Gas Volume.

$$V_{m(std)} = (\overline{Q}_{std})(\theta_s)(1 - B_{wa})\frac{M_a}{M_b} \quad \text{Eq. 16A-7}$$

7.1.9.5 Concentration of H_2S in the Gas Cylinder.

$$C_{H2S} = \frac{K N_T (V_{TB} - V_T)}{V_{m(std)}} \quad \text{Eq. 16A-8}$$

8. Bibliography

1. American Public Health Association, American Water Works Association, and Water Pollution Control Federation. Standard Methods for the Examination of Water and Wastewater. Washington, DC. American Public Health Association. 1975. p. 316–317.

2. American Society for Testing and Materials. Annual Book of ASTM Standards. Part 31: Water, Atmospheric Analysis. Philadelphia, PA. 1974. p. 40–42.

3. Blosser, R.O. A Study of TRS Measurement Methods. National Council of the Paper Industry for Air and Stream Improvement, Inc., New York, NY. Technical Bulletin No. 434. May 1984. 14 p.

4. Blosser, R.O., H.S. Oglesby, and A.K. Jain. A Study of Alternate SO_2 Scrubber Designs Used for TRS Monitoring. A Special Report by the National Council of the Paper Industry for Air and Stream Improvement, Inc., New York, NY. July 1977.

5. Curtis, F., and G.D. McAlister. Development and Evaluation of an Oxidation/Method 6 TRS Emission Sampling Procedure. Emission Measurement Branch, Emission Standards and Engineering Division, U.S. Environmental Protection Agency, Research Triangle Park, NC 27711. February 1980.

6. Gellman, I. A Laboratory and Field Study of Reduced Sulfur Sampling and Monitoring Systems. National Council of the Paper Industry for Air and Stream Improvement, Inc., New York, NY. Atmospheric Quality Improvement Technical Bulletin No. 81. October 1975.

7. Margeson, J.H., J.E. Knoll, and M.R. Midgett. A Manual Method for TRS Determination. Draft Available from the authors. Source Branch, Quality Assurance Division, U.S. Environmental Protection Agency, Research Triangle Park, NC 27711.

8. National Council of the Paper Industry for Air and Stream Improvement. An Investigation of H_2S and SO_2 Calibration Cylinder Gas Stability and Their Standardization

Using Wet Chemical Techniques. Special Report 76–06. New York, NY. August 1976.

9. National Council of the Paper Industry for Air and Stream Improvement. Wet Chemical Method for Determining the H_2S Concentration of Calibration Cylinder Gases. Technical Bulletin Number 450. New York, NY. January 1985. 23 p.

10. National Council of the Paper Industry for Air and Stream Improvement. Modified Wet Chemcial Method for Determining the H_2S Concentration of Calibration Cylinder Gases. Draft Report. New York, NY. March 1987. 29 p.

METHOD 16B—DETERMINATION OF TOTAL REDUCED SULFUR EMISSIONS FROM STATIONARY SOURCES

1. *Applicability, Principle, Range and Sensitivity, Interferences, and Precision and Accuracy*

1.1 *Applicability*. This method is applicable to the determination of total reduced sulfur (TRS) emissions from recovery furnaces, lime kilns, and smelt dissolving tanks at kraft pulp mills, and from other sources when specified in an applicable subpart of the regulations. The TRS compounds include hydrogen sulfide (H_2S), methyl mercaptan, dimethyl sulfide, and dimethyl disulfide.

The flue gas must contain at least 1 percent oxygen for complete oxidation of all TRS to sulfur dioxide (SO_2).

1.2 *Principle.* An integrated gas sample is extracted from the stack. The SO_2 is removed selectively from the sample using a citrate buffer solution. The TRS compounds are then thermally oxidized to SO_2 and analyzed as SO_2 by gas chromatography (GC) using flame photometric detection (FPD).

1.3 *Range and Sensitivity*. Coupled with a GC utilizing a 1-ml sample size, the maximum limit of the FPD for SO_2 is approximately 10 ppm. This limit is expanded by dilution of the sample gas before analysis or by reducing the sample aliquot size. For sources with emission levels between 10 and 100 ppm, the measuring range can be best extended by reducing the sample size.

1.4 *Interferences.* The TRS compounds other than those regulated by the emission standards, if present, may be measured by this method. Therefore, carbonyl sulfide, which is partially oxidized to SO_2 and may be present in a lime kiln exit stack, would be a positive interferent.

Particulate matter from the lime kiln stack gas (primarily calcium carbonate) can cause a negative bias if it is allowed to enter the citrate scrubber; the particulate matter will cause the pH to rise and H_2S to be absorbed before oxidation. Proper use of the particulate filter, described in Section 2.1.3 of Method 16A, will eliminate this interference.

Carbon monoxide (CO) and carbon dioxide (CO_2) have substantial desensitizing effects on the FPD even after dilution. Acceptable systems must demonstrate that they have eliminated this interference by some procedure such as eluting these compounds before the SO_2. Compliance with this requirement can be demonstrated by submitting chromatograms of calibration gases with and without CO_2 in diluent gas. The CO_2 level should be approximately 10 percent for the case with CO_2 present. The two chromatograms should show agreement within the precision limits of Section 1.5.

1.5 *Precision and Accuracy*. The GC/FPD and dilution calibration precision and drift, and the system calibration accuracy are the same as in Method 16, Sections 4.1 to 4.3.

Field tests between this method and Method 16A showed an average difference of less than 4.0 percent. This difference was not determined to be significant.

2. *Apparatus*

2.1 *Sampling.* A sampling train is shown in Figure 16B–1. Modifications to the apparatus are accepted provided the system performance check is met.

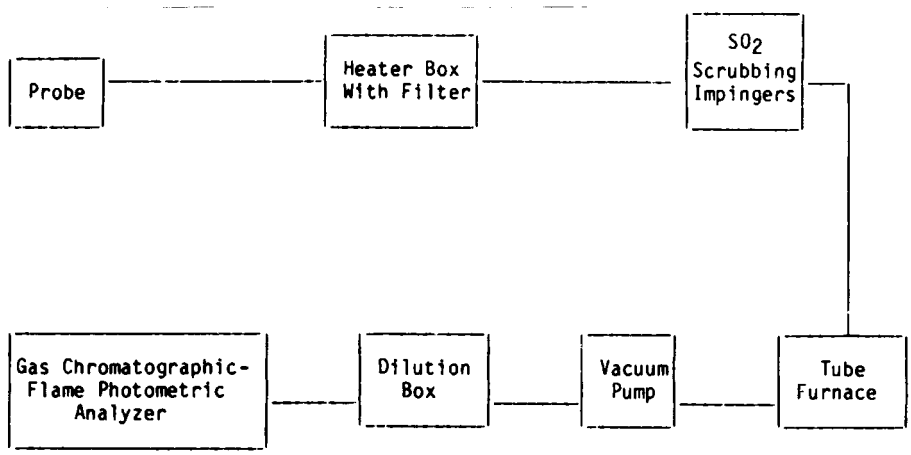

Figure 16B-1. Sampling train.

2.1.1 *Probe, Probe Brush, Particulate Filter, SO_2 Scrubber, Combustion Tube, and Furnace.* Same as in Method 16A, Sections 2.1.1 to 2.1.6.

2.1.2 *Sampling Pump.* Leakless Teflon-coated diaphragm type or equivalent.

2.2 *Analysis.*

2.2.1 *Dilution System (optional), Gas Chromatograph, Oven, Temperature Gauges, Flow System, Flame Photometric Detector, Electrometer, Power Supply, Recorder, Calibration System, Tube Chamber, Flow System, and Constant Temperature Bath.* Same as in Method 16, Sections 5.2, 5.4, and 5.5.

2.2.2 *Gas Chromatograph Columns.* Same as in Method 16, Section 12.1.4.1.1. Other columns with demonstrated ability to resolve SO_2 and be free from known interferences are acceptable alternatives.

3. *Reagents*

Same as in Method 16, Section 6, except the following:

3.1 *Calibration Gas.* SO_2 permeation tube gravimetrically calibrated and certified at some convenient operating temperature. These tubes consist of hermetically sealed FEP Teflon tubing in which a liquefied gaseous substance is enclosed. The enclosed gas permeates through the tubing wall at a constant rate. When the temperature is constant, calibration gases covering a wide range of known concentrations can be generated by varying and accurately measuring the flow rate of diluent gas passing over the tubes. In place of SO_2 permeation tubes, National Bureau of Standards traceable cylinder gases containing SO_2 in nitrogen may be used for calibration. The calibration gas is used to calibrate the GC/FPD system and the dilution system.

3.2 *Recovery Check Gas.* Hydrogen sulfide (100 ppm or less) in nitrogen, stored in aluminum cylinders. Verify the concentration by Method 11, the procedure discussed in Section 7.1 of Method 16A, or gas chromatography where the instrument is calibrated with an H_2S permeation tube as described below. For the wet-chemical methods, the standard deviation should not exceed 5 percent on at least three 20-minute runs.

Hydrogen sulfide recovery gas generated from a permeation device gravimetically calibrated and certified at some convenient operation temperature may be used. The permeation rate of the device must be such that at a dilution gas flow rate of 3 liters/min, an H_2S concentration in the range of the stack gas or within 20 percent of the standard can be generated.

3.3 *Combustion Gas.* Gas containing less than 50 ppb reduced sulfur compounds and less than 10 ppm total hydrocarbons. The gas may be generated from a clean-air system that purifies ambient air and consists of the following components: diaphragm pump, silica gel drying tube, activated charcoal tube, and flow rate measuring device. Gas from a compressed air cylinder is also acceptable.

4. *Pretest Procedures*

Same as in Method 16, Section 7.

5. *Calibration*

Same as in Method 16, Section 8, except SO_2 is used instead of H_2S.

6. *Sampling and Analysis Procedure*

6.1 *Sampling.* Before any source sampling is done, conduct a system performance check as detailed in Section 7.1 to validate the sampling train components and procedures. Although this test is optional, it would significantly reduce the possibility of rejecting tests as a result of failing the post-test performance check. At the completion of the pretest system performance check, insert the sampling probe into the test port making certain that no dilution air enters the stack through the port. Condition the entire system with sample for a minimum of 15 minutes before beginning analysis. If the sample is diluted, determine the precise dilution factor as in Section 8.5 of Method 16.

6.2 *Analysis.* Pass aliquots of diluted sample through the SO_2 scrubber and oxidation furnace, and then inject into the GC/FPD analyzer for analysis. The rest of the analysis is the same as in Method 16, Sections 9.2.1 and 9.2.2.

7. Post-Test Procedures

7.1 *System Performance Check.* Same as in Method 16A, Section 4.3. Sufficient numbers of sample injections should be made so that the precision requirements of Section 4.1 of Method 16 are satisfied.

7.2 *Recalibration.* Same as in Method 16, Section 10.2.

7.3 *Determination of Calibration Drift.* Same as in Method 16, Section 10.3.

8. Calculations

8.1 *Nomenclature.*

C_{SO2} = Sulfur dioxide concentration, ppm.
C_{TRS} = Total reduced sulfur concentration as determined by Equation 16B–1, ppm.
d = Dilution factor, dimensionless.
N = Number of samples.

8.2 SO_2 *Concentration.* Determine the concentration of SO_2 (C_{SO2}) directly from the calibration curves. Alternatively, the concentration may be calculated using the equation for the least-squares line.

8.3 *TRS Concentration.*

$$C_{TRS} = (C_{SO2})\,(d) \qquad \text{Eq. 16B–1}$$

8.4 *Average TRS Concentration.*

$$\text{Avg. } C_{TRS} = \frac{\sum_{i=1}^{n} C_{TRS}}{N} \qquad \text{Eq. 16B-2}$$

9. *Example System*

Same as in Method 16, Section 12. Single column systems using the column in Section 12.1.4.1.1 of Method 16 or a 7-ft Carbosorb B HT 100 column have been found satisfactory in resolving SO_2 from CO_2.

10. *Bibliography*

1. Same as in Method 16, Sections 13.1 to 13.6.

2. National Council of the Paper Industry for Air and Stream Improvement, Inc. A Study of TRS Measurement Methods. Technical Bulletin No. 434. New York, NY. May 1984. 12 p.

3. Margeson, J.H., J.E. Knoll, and M.R. Midgett. A Manual Method for TRS Determination. Draft available from the authors. Source Branch, Quality Assurance Division, U.S. Environmental Protection Agency, Research Triangle Park, NC 27711.

METHOD 17—DETERMINATION OF PARTICULATE EMISSIONS FROM STATIONARY SOURCES (IN-STACK FILTRATION METHOD)

Introduction

Particulate matter is not an absolute quantity; rather, it is a function of temperature and pressure. Therefore, to prevent variability in particulate matter emission regulations and/or associated test methods, the temperature and pressure at which particulate matter is to be measured must be carefully defined. Of the two variables (i.e., temperature and pressure), temperature has the greater effect upon the amount of particulate matter in an effluent gas stream; in most stationary source categories, the effect of pressure appears to be negligible.

In Method 5, 250 °F is established as a nominal reference temperature. Thus, where Method 5 is specified in an applicable subpart of the standards, particulate matter is defined with respect to temperature. In order to maintain a collection temperature of 250 °F, Method 5 employs a heated glass sample probe and a heated filter holder. This equipment is somewhat cumbersome and requires care in its operation. Therefore, where particulate matter concentrations (over the normal range of temperature associated with a specified source category) are known to be independent of temperature, it is desirable to eliminate the glass probe and heating systems, and sample at stack temperature.

This method describes an in-stack sampling system and sampling procedures for use in such cases. It is intended to be used only when specified by an applicable subpart of the standards, and only within the applicable temperature limits (if specified), or when otherwise approved by the Administrator.

1. *Principle and Applicability*

1.1 Principle. Particulate matter is withdrawn isokinetically from the source and collected on a glass fiber filter maintained at stack temperature. The particulate mass is determined gravimetrically after removal of uncombined water.

1.2 Applicability. This method applies to the determination of particulate emissions from stationary sources for determining compliance with new source performance standards, only when specifically provided for in an applicable subpart of the standards. This method is not applicable to stacks that contain liquid droplets or are saturated with water vapor. In addition, this method shall

not be used as written if the projected cross-sectional area of the probe extension-filter holder assembly covers more than 5 percent of the stack cross-sectional area (see Section 4.1.2).

2. *Apparatus*

2.1 Sampling Train. A schematic of the sampling train used in this method is shown in Figure 17–1. Construction details for many, but not all, of the train components are given in APTD–0581 (Citation 2 in Bibliography); for changes from the APTD–0581 document and for allowable modifications to Figure 17–1, consult with the Administrator.

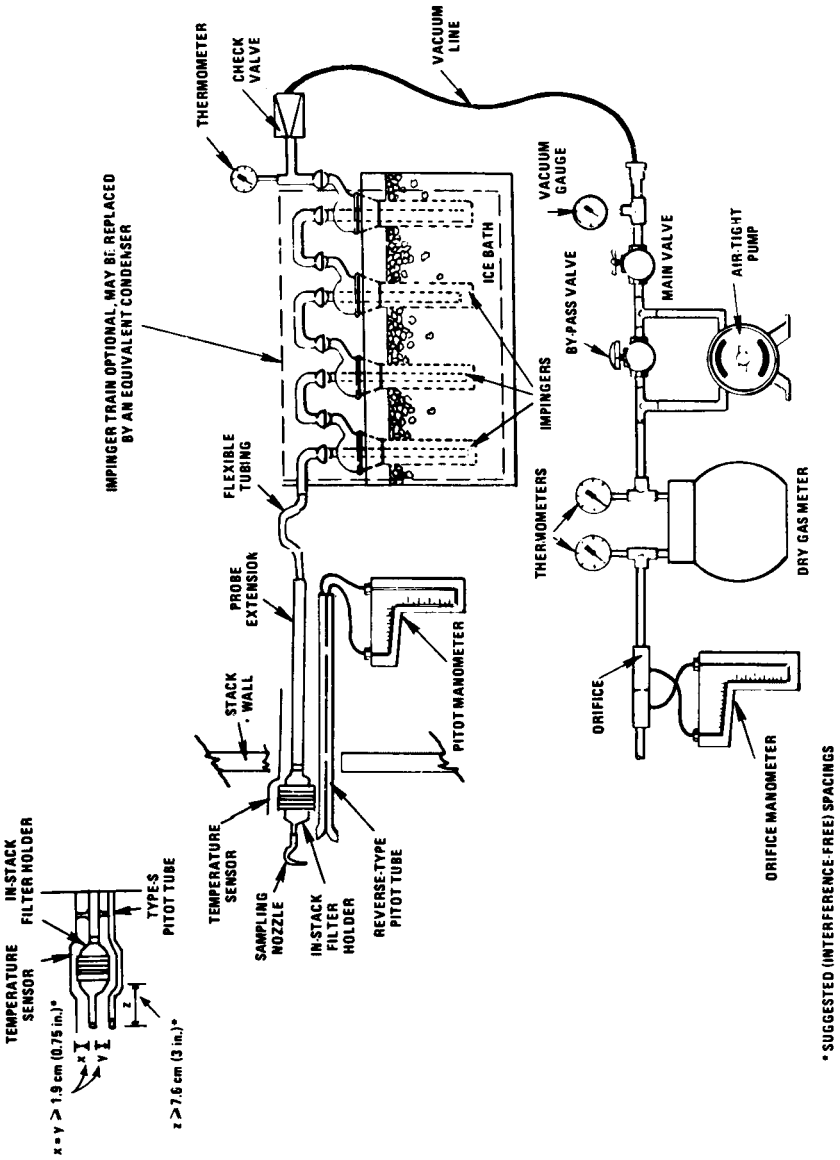

Figure 17-1. Particulate-Sampling Train, Equipped with In-Stack Filter.

The operating and maintenance procedures for many of the sampling train components are described in APTD–0576 (Citation 3 in Bibliography). Since correct usage is important in obtaining valid results, all users should read the APTD–0576 document and adopt the operating and maintenance procedures outlined in it, unless otherwise specified herein. The sampling train consists of the following components:

2.1.1 Probe Nozzle. Stainless steel (316) or glass, with sharp, tapered leading edge. The angle of taper shall be 30° and the taper shall be on the outside to preserve a constant internal diameter. The probe nozzle shall be of the button-hook or elbow design, unless otherwise specified by the Administrator. If made of stainless steel, the nozzle shall be constructed from seamless tubing. Other materials of construction may be used subject to the approval of the Administrator.

A range of sizes suitable for isokinetic sampling should be available, e.g., 0.32 to 1.27 cm (⅛ to ½ in.)—or larger if higher volume sampling trains are used—inside diameter (ID) nozzles in increments of 0.16 cm (1/16 in.). Each nozzle shall be calibrated according to the procedures outlined in Section 5.1.

2.1.2 Filter Holder. The in-stack filter holder shall be constructed of borosilicate or quartz glass, or stainless steel; if a gasket is used, it shall be made of silicone rubber, Teflon, or stainless steel. Other holder and gasket materials may be used subject to the approval of the Administrator. The filter holder shall be designed to provide a positive seal against leakage from the outside or around the filter.

2.1.3 Probe Extension. Any suitable rigid probe extension may be used after the filter holder.

2.1.4 Pitot Tube. Type S, as described in Section 2.1 of Method 2, or other device approved by the Administrator; the pitot tube shall be attached to the probe extension to allow constant monitoring of the stack gas velocity (see Figure 17–1). The impact (high pressure) opening plane of the pitot tube shall be even with or above the nozzle entry plane during sampling (see Method 2, Figure 2–6b). It is recommended: (1) that the pitot tube have a known baseline coefficient, determined as outlined in Section 4 of Method 2; and (2) that this known coefficient be preserved by placing the pitot tube in an interference-free arrangement with respect to the sampling nozzle, filter holder, and temperature sensor (see Figure 17–1). Note that the 1.9 cm (0.75 in.) free-space between the nozzle and pitot tube shown in Figure 17–1, is based on a 1.3 cm (0.5 in.) ID nozzle. If the sampling train is designed for sampling at higher flow rates than that described in APTD–0581, thus necessitating the use of larger sized nozzles, the free-space shall be 1.9 cm (0.75 in.) with the largest sized nozzle in place.

Source-sampling assemblies that do not meet the minimum spacing requirements of Figure 17–1 (or the equivalent of these requirements, e.g., Figure 2–7 of Method 2) may be used; however, the pitot tube coefficients of such assemblies shall be determined by calibration, using methods subject to the approval of the Administrator.

2.1.5 Differential Pressure Gauge. Inclined manometer or equivalent device (two), as described in Section 2.2 of Method 2. One manometer shall be used for velocity head (Δp) readings, and the other, for orifice differential pressure readings.

2.1.6 Condenser. It is recommended that the impinger system described in Method 5 be used to determine the moisture content of the stack gas. Alternatively, any system that allows measurement of both the water condensed and the moisture leaving the condenser, each to within 1 ml or 1 g, may be used. The moisture leaving the condenser can be measured either by: (1) monitoring the temperature and pressure at the exit of the condenser and using Dalton's law of partial pressures; or (2) passing the sample gas stream through a silica gel trap with exit gases kept below 20 °C (68 °F) and determining the weight gain.

Flexible tubing may be used between the probe extension and condenser. If means other than silica gel are used to determine the amount of moisture leaving the condenser, it is recommended that silica gel still be used between the condenser system and pump to prevent moisture condensation in the pump and metering devices and to avoid the need to make corrections for moisture in the metered volume.

2.1.7 Metering System. Vacuum gauge, leak-free pump, thermometers capable of measuring temperature to within 3 °C (5.4 °F), dry gas meter capable of measuring volume to within 2 percent, and related equipment, as shown in Figure 17–1. Other metering systems capable of maintaining sampling rates within 10 percent of isokinetic and of determining sample volumes to within 2 percent may be used, subject to the approval of the Administrator. When the metering system is used in conjunction with a pitot tube, the system shall enable checks of isokinetic rates.

Sampling trains utilizing metering systems designed for higher flow rates than that described in APTD–0581 or APTD–0576 may be used provided that the specifications of this method are met.

2.1.8 Barometer. Mercury, aneroid, or other barometer capable of measuring atmospheric pressure to within 2.5 mm Hg (0.1 in. Hg). In many cases, the barometric reading may be obtained from a nearby National Weather Service station, in which case the station value (which is the absolute barometric pressure) shall be requested and an adjustment for elevation differences between

the weather station and sampling point shall be applied at a rate of minus 2.5 mm Hg (0.1 in. Hg) per 30 m (100 ft) elevation increase or vice versa for elevation decrease.

2.1.9 Gas Density Determination Equipment. Temperature sensor and pressure gauge, as described in Sections 2.3 and 2.4 of Method 2, and gas analyzer, if necessary, as described in Method 3.

The temperature sensor shall be attached to either the pitot tube or to the probe extension, in a fixed configuration. If the temperature sensor is attached in the field, the sensor shall be placed in an interference-free arrangement with respect to the Type S pitot tube openings (as shown in Figure 17–1 or in Figure 2–7 of Method 2). Alternatively, the temperature sensor need not be attached to either the probe extension or pitot tube during sampling, provided that a difference of not more than 1 percent in the average velocity measurement is introduced. This alternative is subject to the approval of the Administrator.

2.2 Sample Recovery.

2.2.1 Probe Nozzle Brush. Nylon bristle brush with stainless steel wire handle. The brush shall be properly sized and shaped to brush out the probe nozzle.

2.2.2 Wash Bottles—Two. Glass wash bottles are recommended; polyethylene wash bottles may be used at the option of the tester. It is recommended that acetone not be stored in polyethylene bottles for longer than a month.

2.2.3 Glass Sample Storage Containers. Chemically resistant, borosilicate glass bottles, for acetone washes, 500 ml or 1000 ml. Screw cap liners shall either be rubber-backed Teflon or shall be constructed so as to be leak-free and resistant to chemical attack by acetone. (Narrow mouth glass bottles have been found to be less prone to leakage.) Alternatively, polyethylene bottles may be used.

2.2.4 Petri Dishes. For filter samples; glass or polyethylene, unless otherwise specified by the Administrator.

2.2.5 Graduated Cylinder and/or Balance. To measure condensed water to within 1 ml or 1 g. Graduated cylinders shall have subdivisions no greater than 2 ml. Most laboratory balances are capable of weighing to the nearest 0.5 g or less. Any of these balances is suitable for use here and in Section 2.3.4.

2.2.6 Plastic Storage Containers. Air tight containers to store silica gel.

2.2.7 Funnel and Rubber Policeman. To aid in transfer of silica gel to container; not necessary if silica gel is weighed in the field.

2.2.8 Funnel. Glass or polyethylene, to aid in sample recovery.

2.3 Analysis.

2.3.1 Glass Weighing Dishes.

2.3.2 Desiccator.

2.3.3 Analytical Balance. To measure to within 0.1 mg.

2.3.4 Balance. To measure to within 0.5 mg.

2.3.5 Beakers. 250 ml.

2.3.6 Hygrometer. To measure the relative humidity of the laboratory environment.

2.3.7 Temperature Gauge. To measure the temperature of the laboratory environment.

3. *Reagents*

3.1 Sampling.

3.1.1 Filters. The in-stack filters shall be glass mats or thimble fiber filters, without organic binders, and shall exhibit at least 99.95 percent efficiency (0.05 percent penetration) on 0.3 micron dioctyl phthalate smoke particles. The filter efficiency tests shall be conducted in accordance with ASTM Standard Method D2986–71 (Reapproved 1978) (incorporated by reference—see §60.17). Test data from the supplier's quality control program are sufficient for this purpose.

3.1.2 Silica Gel. Indicating type, 6- to 16-mesh. If previously used, dry at 175 °C (350 °F) for 2 hours. New silica gel may be used as received. Alternatively, other types of desiccants (equivalent or better) may be used, subject to the approval of the Administrator.

3.1.3 Crushed Ice.

3.1.4 Stopcock Grease. Acetone-insoluble, heat-stable silicone grease. This is not necessary if screw-on connectors with Teflon sleeves, or similar, are used. Alternatively, other types of stopcock grease may be used, subject to the approval of the Administrator.

3.1.5 Water. Same as in Method 5, section 3.1.3.

3.2 Sample Recovery. Acetone, reagent grade, 0.001 percent residue, in glass bottles. Acetone from metal containers generally has a high residue blank and should not be used. Sometimes, suppliers transfer acetone to glass bottles from metal containers. Thus, acetone blanks shall be run prior to field use and only acetone with low blank values (0.001 percent) shall be used. In no case shall a blank value of greater than 0.001 percent of the weight of acetone used be subtracted from the sample weight.

3.3 Analysis.

3.3.1 Acetone. Same as 3.2.

3.3.2 Desiccant. Anhydrous calcium sulfate, indicating type. Alternatively, other types of desiccants may be used, subject to the approval of the Administrator.

4. *Procedure*

4.1 Sampling. The complexity of this method is such that, in order to obtain reliable results, testers should be trained and experienced with the test procedures.

4.1.1 Pretest Preparation. All components shall be maintained and calibrated according to the procedure described in APTD–0576, unless otherwise specified herein.

Weigh several 200 to 300 g portions of silica gel in air-tight containers to the nearest 0.5 g. Record the total weight of the silica gel

plus container, on each container. As an alternative, the silica gel need not be preweighed, but may be weighed directly in its impinger or sampling holder just prior to train assembly.

Check filters visually against light for irregularities and flaws or pinhole leaks. Label filters of the proper size on the back side near the edge using numbering machine ink. As an alternative, label the shipping containers (glass or plastic petri dishes) and keep the filters in these containers at all times except during sampling and weighing.

Desiccate the filters at 20±5.6 °C (68±10 °F) and ambient pressure for at least 24 hours and weigh at intervals of at least 6 hours to a constant weight, i.e., 0.5 mg change from previous weighing; record results to the nearest 0.1 mg. During each weighing the filter must not be exposed to the laboratory atmosphere for a period greater than 2 minutes and a relative humidity above 50 percent. Alternatively (unless otherwise specified by the Administrator), the filters may be oven dried at 105 °C (220 °F) for 2 to 3 hours, desiccated for 2 hours, and weighed. Procedures other than those described, which account for relative humidity effects, may be used, subject to the approval of the Administrator.

4.1.2 Preliminary Determinations. Select the sampling site and the minimum number of sampling points according to Method 1 or as specified by the Administrator. Make a projected-area model of the probe extension-filter holder assembly, with the pitot tube face openings positioned along the centerline of the stack, as shown in Figure 17–2. Calculate the estimated cross-section blockage, as shown in Figure 17–2. If the blockage exceeds 5 percent of the duct cross sectional area, the tester has the following options: (1) a suitable out-of-stack filtration method may be used instead of in-stack filtration; or (2) a special in-stack arrangement, in which the sampling and velocity measurement sites are separate, may be used; for details concerning this approach, consult with the Administrator (see also Citation 10 in Bibliography). Determine the stack pressure, temperature, and the range of velocity heads using Method 2; it is recommended that a leak-check of the pitot lines (see Method 2, Section 3.1) be performed. Determine the moisture content using Approximation Method 4 or its alternatives for the purpose of making isokinetic sampling rate settings. Determine the stack gas dry molecular weight, as described in Method 2, Section 3.6; if integrated Method 3 sampling is used for molecular weight determination, the integrated bag sample shall be taken simultaneously with, and for the same total length of time as, the particulate sample run.

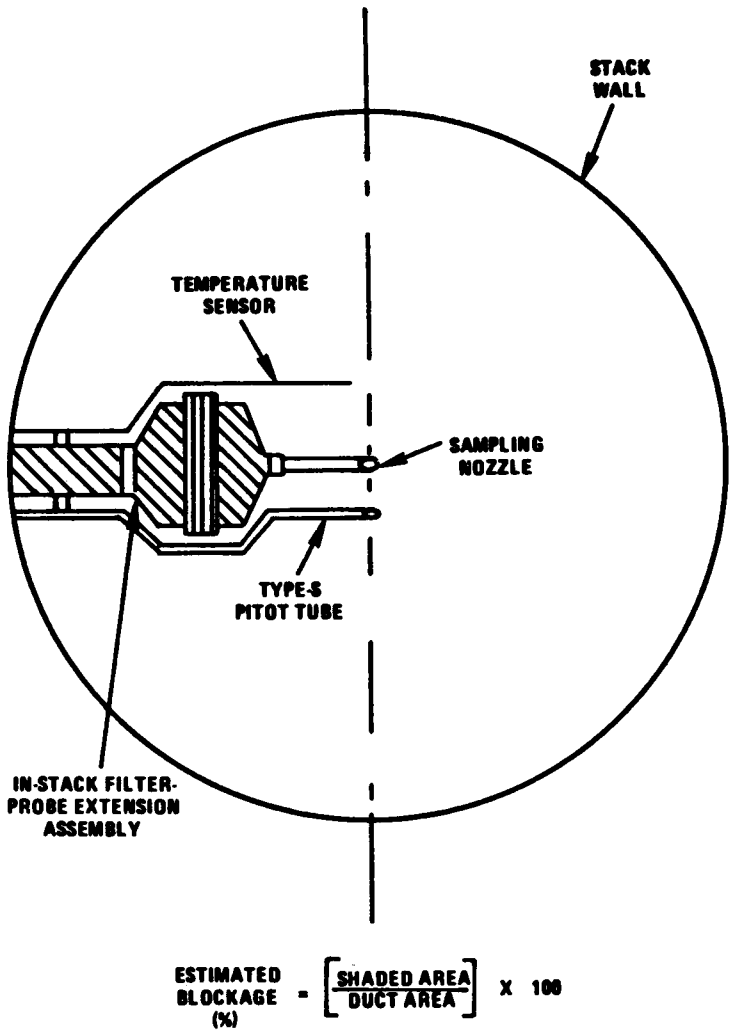

Figure 17-2. Projected-area model of cross-section blockage (approximate average for a sample traverse) caused by an in-stack filter holder-probe extension assembly.

Select a nozzle size based on the range of velocity heads, such that it is not necessary to change the nozzle size in order to maintain isokinetic sampling rates. During the run, do not change the nozzle size. Ensure that the proper differential pressure gauge is chosen for the range of velocity heads encountered (see Section 2.2 of Method 2).

Select a probe extension length such that all traverse points can be sampled. For large stacks, consider sampling from opposite

sides of the stack to reduce the length of probes.

Select a total sampling time greater than or equal to the minimum total sampling time specified in the test procedures for the specific industry such that (1) the sampling time per point is not less than 2 minutes (or some greater time interval if specified by the Administrator), and (2) the sample volume taken (corrected to standard conditions) will exceed the required minimum total gas sample volume. The latter is based on an approximate average sampling rate.

It is recommended that the number of minutes sampled at each point be an integer or an integer plus one-half minute, in order to avoid timekeeping errors.

In some circumstances, e.g., batch cycles, it may be necessary to sample for shorter times at the traverse points and to obtain smaller gas sample volumes. In these cases, the Administrator's approval must first be obtained.

4.1.3 Preparation of Collection Train. During preparation and assembly of the sampling train, keep all openings where contamination can occur covered until just prior to assembly or until sampling is about to begin.

If impingers are used to condense stack gas moisture, prepare them as follows: place 100 ml of water in each of the first two impingers, leave the third impinger empty, and transfer approximately 200 to 300 g of preweighed silica gel from its container to the fourth impinger. More silica gel may be used, but care should be taken to ensure that it is not entrained and carried out from the impinger during sampling. Place the container in a clean place for later use in the sample recovery. Alternatively, the weight of the silica gel plus impinger may be determined to the nearest 0.5 g and recorded.

If some means other than impingers is used to condense moisture, prepare the condenser (and, if appropriate, silica gel for condenser outlet) for use.

Using a tweezer or clean disposable surgical gloves, place a labeled (identified) and weighed filter in the filter holder. Be sure that the filter is properly centered and the gasket properly placed so as not to allow the sample gas stream to circumvent the filter. Check filter for tears after assembly is completed. Mark the probe extension with heat resistant tape or by some other method to denote the proper distance into the stack or duct for each sampling point.

Assemble the train as in Figure 17–1, using a very light coat of silicone grease on all ground glass joints and greasing only the outer portion (see APTD–0576) to avoid possibility of contamination by the silicone grease. Place crushed ice around the impingers.

4.1.4 Leak Check Procedures.

4.1.4.1 Pretest Leak-Check. A pretest leak-check is recommended, but not required. If the tester opts to conduct the pretest leak-check, the following procedure shall be used.

After the sampling train has been assembled, plug the inlet to the probe nozzle with a material that will be able to withstand the stack temperature. Insert the filter holder into the stack and wait approximately 5 minutes (or longer, if necessary) to allow the system to come to equilibrium with the temperature of the stack gas stream. Turn on the pump and draw a vacuum of at least 380 mm Hg (15 in. Hg); note that a lower vacuum may be used, provided that it is not exceeded during the test. Determine the leakage rate. A leakage rate in excess of 4 percent of the average sampling rate or 0.00057 m^3/min. (0.02 cfm), whichever is less, is unacceptable.

The following leak-check instructions for the sampling train described in APTD–0576 and APTD–0581 may be helpful. Start the pump with by-pass valve fully open and coarse adjust valve completely closed. Partially open the coarse adjust valve and slowly close the by-pass valve until the desired vacuum is reached. Do not reverse direction of by-pass valve. If the desired vacuum is exceeded, either leak-check at this higher vacuum or end the leak-check as shown below and start over.

When the leak-check is completed, first slowly remove the plug from the inlet to the probe nozzle and immediately turn off the vacuum pump. This prevents water from being forced backward and keeps silica gel from being entrained backward.

4.1.4.2 Leak-Checks During Sample Run. If, during the sampling run, a component (e.g., filter assembly or impinger) change becomes necessary, a leak-check shall be conducted immediately before the change is made. The leak-check shall be done according to the procedure outlined in Section 4.1.4.1 above, except that it shall be done at a vacuum equal to or greater than the maximum value recorded up to that point in the test. If the leakage rate is found to be no greater than 0.00057 m^3/min (0.02 cfm) or 4 percent of the average sampling rate (whichever is less), the results are acceptable, and no correction will need to be applied to the total volume of dry gas metered; if, however, a higher leakage rate is obtained, the tester shall either record the leakage rate and plan to correct the sample volume as shown in Section 6.3 of this method, or shall void the sampling run.

Immediately after component changes, leak-checks are optional; if such leak-checks are done, the procedure outlined in Section 4.1.4.1 above shall be used.

4.1.4.3 Post-Test Leak-Check. A leak-check is mandatory at the conclusion of each sampling run. The leak-check shall be done in accordance with the procedures outlined

in Section 4.1.4.1, except that it shall be conducted at a vacuum equal to or greater than the maximum value reached during the sampling run. If the leakage rate is found to be no greater than 0.00057 m^3/min (0.02 cfm) or 4 percent of the average sampling rate (whichever is less), the results are acceptable, and no correction need be applied to the total volume of dry gas metered. If, however, a higher leakage rate is obtained, the tester shall either record the leakage rate and correct the sample volume as shown in Section 6.3 of this method, or shall void the sampling run.

4.1.5 Particulate Train Operation. During the sampling run, maintain a sampling rate such that sampling is within 10 percent of true isokinetic, unless otherwise specified by the Administrator.

For each run, record the data required on the example data sheet shown in Figure 17–3. Be sure to record the initial dry gas meter reading. Record the dry gas meter readings at the beginning and end of each sampling time increment, when changes in flow rates are made, before and after each leak check, and when sampling is halted. Take other readings required by Figure 17–3 at least once at each sample point during each time increment and additional readings when significant changes (20 percent variation in velocity head readings) necessitate additional adjustments in flow rate. Level and zero the manometer. Because the manometer level and zero may drift due to vibrations and temperature changes, make periodic checks during the traverse.

FIGURE 17–3—PARTICULATE FIELD DATA

Plant .....
Location .....
Operator .....
Date .....
Run No .....
Sample box No .....
Meter box No .....
Meter Δ H@ .....
C factor.
Pitot tube coefficient, Cp.

Barometric pressure .....
Assumed moisture, % .....
Probe extension length, m (ft.) .....
Nozzle identification No. .....
Average calibrated nozzle diameter cm (in.) .....
Filter No. .....
Leak rate, m^3/min, (cfm) .....
Static pressure, mm Hg (in. Hg) .....
.

SCHEMATIC OF STACK CROSS SECTION

Traverse point number	Sampling time (θ), min.	Vacuum mm Hg (in. Hg)	Stack temperature (T_S) °C (°F)	Velocity head (Δ P) mm H_20 (in H_20)	Pressure differential-across orifice meter mm H_20 (in H_20)	Gas sample volume m^3 (ft^3)	Gas sample temperature at dry gas meter		Temperature of gas leaving condenser or last impinger °C (°F)
							Inlet °C (°F)	Outlet °C (°F)	
Total									
Average									

Clean the portholes prior to the test run to minimize the chance of sampling the deposited material. To begin sampling, remove the nozzle cap and verify that the pitot tube and probe extension are properly positioned. Position the nozzle at the first traverse point with the tip pointing directly into the gas stream. Immediately start the pump and adjust the flow to isokinetic conditions. Nomographs are available, which aid in the rapid adjustment to the isokinetic sampling rate without excessive computations. These nomographs are designed for use when the Type S pitot tube coefficient is 0.85±0.02, and the stack gas equivalent density (dry molecular weight) is equal to 29±4. APTD–0576 details the procedure for using the nomographs. If C_p and M_d are outside the above stated ranges, do not use the nomographs unless appropriate steps (see Citation 7 in Bibliography) are taken to compensate for the deviations.

When the stack is under significant negative pressure (height of impinger stem), take care to close the coarse adjust valve before inserting the probe extension assembly into the stack to prevent water from being forced backward. If necessary, the pump may be turned on with the coarse adjust valve closed.

When the probe is in position, block off the openings around the probe and porthole to prevent unrepresentative dilution of the gas stream.

Traverse the stack cross section, as required by Method 1 or as specified by the Administrator, being careful not to bump the probe nozzle into the stack walls when sampling near the walls or when removing or inserting the probe extension through the portholes, to minimize chance of extracting deposited material.

During the test run, take appropriate steps (e.g., adding crushed ice to the impinger ice bath) to maintain a temperature of less than 20 °C (68 °F) at the condenser outlet; this will prevent excessive moisture losses. Also, periodically check the level and zero of the manometer.

If the pressure drop across the filter becomes too high, making isokinetic sampling difficult to maintain, the filter may be replaced in the midst of a sample run. It is recommended that another complete filter holder assembly be used rather than attempting to change the filter itself. Before a new filter holder is installed, conduct a leak check, as outlined in Section 4.1.4.2. The total particulate weight shall include the summation of all filter assembly catches.

A single train shall be used for the entire sample run, except in cases where simultaneous sampling is required in two or more separate ducts or at two or more different locations within the same duct, or, in cases where equipment failure necessitates a change of trains. In all other situations, the use of two or more trains will be subject to the approval of the Administrator. Note that when two or more trains are used, a separate analysis of the collected particulate from each train shall be performed, unless identical nozzle sizes were used on all trains, in which case the particulate catches from the individual trains may be combined and a single analysis performed.

At the end of the sample run, turn off the pump, remove the probe extension assembly from the stack, and record the final dry gas meter reading. Perform a leak-check, as outlined in Section 4.1.4.3. Also, leak-check the pitot lines as described in Section 3.1 of Method 2; the lines must pass this leak-check, in order to validate the velocity head data.

4.1.6 Calculation of Percent Isokinetic. Calculate percent isokinetic (see Section 6.11) to determine whether another test run should be made. If there is difficulty in maintaining isokinetic rates due to source conditions, consult with the Administrator for possible variance on the isokinetic rates.

4.2 Sample Recovery. Proper cleanup procedure begins as soon as the probe extension assembly is removed from the stack at the end of the sampling period. Allow the assembly to cool.

When the assembly can be safely handled, wipe off all external particulate matter near the tip of the probe nozzle and place a cap over it to prevent losing or gaining particulate matter. Do not cap off the probe tip tightly while the sampling train is cooling down as this would create a vacuum in the filter holder, forcing condenser water backward.

Before moving the sample train to the cleanup site, disconnect the filter holder-probe nozzle assembly from the probe extension; cap the open inlet of the probe extension. Be careful not to lose any condensate, if present. Remove the umbilical cord from the condenser outlet and cap the outlet. If a flexible line is used between the first impinger (or condenser) and the probe extension, disconnect the line at the probe extension and let any condensed water or liquid drain into the impingers or condenser. Disconnect the probe extension from the condenser; cap the probe extension outlet. After wiping off the silicone grease, cap off the condenser inlet. Ground glass stoppers, plastic caps, or serum caps (whichever are appropriate) may be used to close these openings.

Transfer both the filter holder-probe nozzle assembly and the condenser to the cleanup area. This area should be clean and protected from the wind so that the chances of contaminating or losing the sample will be minimized.

Save a portion of the acetone used for cleanup as a blank. Take 200 ml of this acetone directly from the wash bottle being

used and place it in a glass sample container labeled ''acetone blank.''

Inspect the train prior to and during disassembly and note any abnormal conditions. Treat the samples as follows:

Container No. 1. Carefully remove the filter from the filter holder and place it in its identified petri dish container. Use a pair of tweezers and/or clean disposable surgical gloves to handle the filter. If it is necessary to fold the filter, do so such that the particulate cake is inside the fold. Carefully transfer to the petri dish any particulate matter and/or filter fibers which adhere to the filter holder gasket, by using a dry Nylon bristle brush and/or a sharp-edged blade. Seal the container.

Container No. 2. Taking care to see that dust on the outside of the probe nozzle or other exterior surfaces does not get into the sample, quantitatively recover particulate matter or any condensate from the probe nozzle, fitting, and front half of the filter holder by washing these components with acetone and placing the wash in a glass container. Distilled water may be used instead of acetone when approved by the Administrator and shall be used when specified by the Administrator; in these cases, save a water blank and follow Administrator's directions on analysis. Perform the acetone rinses as follows:

Carefully remove the probe nozzle and clean the inside surface by rinsing with acetone from a wash bottle and brushing with a Nylon bristle brush. Brush until acetone rinse shows no visible particles, after which make a final rinse of the inside surface with acetone.

Brush and rinse with acetone the inside parts of the fitting in a similar way until no visible particles remain. A funnel (glass or polyethylene) may be used to aid in transferring liquid washes to the container. Rinse the brush with acetone and quantitatively collect these washings in the sample container. Between sampling runs, keep brushes clean and protected from contamination.

After ensuring that all joints are wiped clean of silicone grease (if applicable), clean the inside of the front half of the filter holder by rubbing the surfaces with a Nylon bristle brush and rinsing with acetone. Rinse each surface three times or more if needed to remove visible particulate. Make final rinse of the brush and filter holder. After all acetone washings and particulate matter are collected in the sample container, tighten the lid on the sample container so that acetone will not leak out when it is shipped to the laboratory. Mark the height of the fluid level to determine whether or not leakage occurred during transport. Label the container to clearly identify its contents.

Container No. 3. If silica gel is used in the condenser system for mositure content determination, note the color of the gel to determine if it has been completely spent; make a notation of its condition. Transfer the silica gel back to its original container and seal. A funnel may make it easier to pour the silica gel without spilling, and a rubber policeman may be used as an aid in removing the silica gel. It is not necessary to remove the small amount of dust particles that may adhere to the walls and are difficult to remove. Since the gain in weight is to be used for moisture calculations, do not use any water or other liquids to transfer the silica gel. If a balance is available in the field, follow the procedure for Container No. 3 under ''Analysis.''

Condenser Water. Treat the condenser or impinger water as follows: make a notation of any color or film in the liquid catch. Measure the liquid volume to within ±1 ml by using a graduated cylinder or, if a balance is available, determine the liquid weight to within ±0.5 g. Record the total volume or weight of liquid present. This information is required to calculate the moisture content of the effluent gas. Discard the liquid after measuring and recording the volume or weight.

4.3 Analysis. Record the data required on the example sheet shown in Figure 17–4. Handle each sample container as follows:

Container No. 1. Leave the contents in the shipping container or transfer the filter and any loose particulate from the sample container to a tared glass weighing dish. Desiccate for 24 hours in a desiccator containing anhydrous calcium sulfate. Weigh to a constant weight and report the results to the nearest 0.1 mg. For purposes of this Section, 4.3, the term ''constant weight'' means a difference of no more than 0.5 mg or 1 percent of total weight less tare weight, whichever is greater, between two consecutive weighings, with no less than 6 hours of desiccation time between weighings.

Alternatively, the sample may be oven dried at the average stack temperature or 105 °C (220 °F), whichever is less, for 2 to 3 hours, cooled in the desiccator, and weighed to a constant weight, unless otherwise specified by the Administrator. The tester may also opt to oven dry the sample at the average stack temperature or 105 °C (220 °F), whichever is less, for 2 to 3 hours, weigh the sample, and use this weight as a final weight.

FIGURE 17–4—ANALYTICAL DATA

Plant
Date
Run No.
Filter No.
Amount liquid lost during transport
Acetone blank volume, ml
Acetone wash volume, ml
Acetone blank concentration, mg/mg (Equation 17–4)
Acetone wash blank, mg (Equation 17–5)

Container number	Weight of particulate collected, mg		
	Final weight	Tare weight	Weight gain
1.			
2.			
Total.			
Less acetone blank.			
Weight of particulate matter.			

	Volume of liquid water collected	
	Impinger volume, ml	Silica gel weight, g
Final.		
Initial.		
Liquid collected.		
Total volume collected		g* ml

*Convert weight of water to volume by dividing total weight increase by density of water (1 g/ml).

$$\frac{\text{Increase, g}}{\text{(1 g/ml)}} = \text{Volume water, ml}$$

Container No. 2. Note the level of liquid in the container and confirm on the analysis sheet whether or not leakage occurred during transport. If a noticeable amount of leakage has occurred, either void the sample or use methods, subject to the approval of the Administrator, to correct the final results. Measure the liquid in this container either volumetrically to ±1 ml or gravimetrically to ±0.5 g. Transfer the contents to a tared 250-ml beaker and evaporate to dryness at ambient temperature and pressure. Desiccate for 24 hours and weigh to a constant weight. Report the results to the nearest 0.1 mg.

Container No. 3. This step may be conducted in the field. Weigh the spent silica gel (or silica gel plus impinger) to the nearest 0.5 g using a balance.

''Acetone Blank'' Container. Measure acetone in this container either volumetrically or gravimetrically. Transfer the acetone to a tared 250-ml beaker and evaporate to dryness at ambient temperature and pressure. Desiccate for 24 hours and weigh to a constant weight. Report the results to the nearest 0.1 mg.

NOTE: At the option of the tester, the contents of Container No. 2 as well as the acetone blank container may be evaporated at temperatures higher than ambient. If evaporation is done at an elevated temperature, the temperature must be below the boiling point of the solvent; also, to prevent ''bumping,'' the evaporation process must be closely supervised, and the contents of the beaker must be swirled occasionally to maintain an even temperature. Use extreme care, as acetone is highly flammable and has a low flash point.

5. *Calibration*

Maintain a laboratory log of all calibrations.

5.1 Probe Nozzle. Probe nozzles shall be calibrated before their initial use in the field. Using a micrometer, measure the inside diameter of the nozzle to the nearest 0.025 mm (0.001 in.). Make three separate measurements using different diameters each time, and obtain the average of the measurements. The difference between the high and low numbers shall not exceed 0.1 mm (0.004 in.). When nozzles become nicked, dented, or corroded, they shall be reshaped, sharpened, and recalibrated before use. Each nozzle shall be permanently and uniquely identified.

5.2 Pitot Tube. If the pitot tube is placed in an interference-free arrangement with respect to the other probe assembly components, its baseline (isolated tube) coefficient shall be determined as outlined in Section 4 of Method 2. If the probe assembly is not interference-free, the pitot tube assembly coefficient shall be determined by calibration, using methods subject to the approval of the Administrator.

5.3 Metering System. Before its initial use in the field, the metering system shall be calibrated according to the procedure outlined in APTD–0576. Instead of physically adjusting the dry gas meter dial readings to correspond to the wet test meter readings, calibration factors may be used to mathematically correct the gas meter dial readings to the proper values.

Before calibrating the metering system, it is suggested that a leak-check be conducted. For metering systems having diaphragm pumps, the normal leak-check procedure will not detect leakages within the pump. For these cases the following leak-check procedure is suggested: make a 10-minute calibration run at 0.00057 m^3/min (0.02 cfm); at the end of the run, take the difference of the measured wet test meter and dry gas meter volumes; divide the difference by 10, to get the leak rate. The leak rate should not exceed 0.00057 m^3/min (0.02 cfm).

After each field use, the calibration of the metering system shall be checked by performing three calibration runs at a single, intermediate orifice setting (based on the previous field test), with the vacuum set at the maximum value reached during the test series. To adjust the vacuum, insert a valve between the wet test meter and the inlet of the metering system. Calculate the average

value of the calibration factor. If the calibration has changed by more than 5 percent, recalibrate the meter over the full range of orifice settings, as outlined in APTD–0576.

Alternative procedures, e.g., using the orifice meter coefficients, may be used, subject to the approval of the Administrator.

NOTE: If the dry gas meter coefficient values obtained before and after a test series differ by more than 5 percent, the test series shall either be voided, or calculations for the test series shall be performed using whichever meter coefficient value (i.e., before or after) gives the lower value of total sample volume.

5.4 Temperature Gauges. Use the procedure in Section 4.3 of Method 2 to calibrate in-stack temperature gauges. Dial thermometers, such as are used for the dry gas meter and condenser outlet, shall be calibrated against mercury-in-glass thermometers.

5.5 Leak Check of Metering System Shown in Figure 17–1. That portion of the sampling train from the pump to the orifice meter should be leak checked prior to initial use and after each shipment. Leakage after the pump will result in less volume being recorded than is actually sampled. The following procedure is suggested (see Figure 17–5). Close the main valve on the meter box. Insert a one-hole rubber stopper with rubber tubing attached into the orifice exhaust pipe. Disconnect and vent the low side of the orifice manometer. Close off the low side orifice tap. Pressurize the system to 13 to 18 cm (5 to 7 in.) water column by blowing into the rubber tubing. Pinch off the tubing and observe the manometer for one minute. A loss of pressure on the manometer indicates a leak in the meter box; leaks, if present, must be corrected.

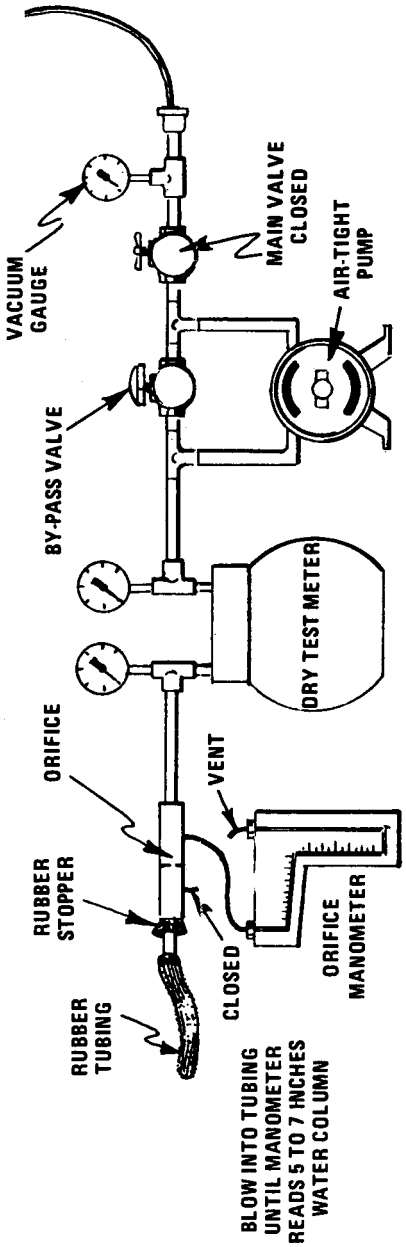

Figure 17-5. Leak check of meter box.

5.6 Barometer. Calibrate against a mercury barometer.

6. *Calculations*

Carry out calculations, retaining at least one extra decimal figure beyond that of the acquired data. Round off figures after the

final calculation. Other forms of the equations may be used as long as they give equivalent results.

6.1 Nomenclature.

A_n=Cross-sectional area of nozzle, m^2(ft^2).

B_{ws}=Water vapor in the gas stream, proportion by volume.

C_a=Acetone blank residue concentration, mg/mg.

c_s=Concentration of particulate matter in stack gas, dry basis, corrected to standard conditions, g/dscm (g/dscf).

I=Percent of isokinetic sampling.

L_a=Maximum acceptable leakage rate for either a pretest leak check or for a leak check following a component change; equal to 0.00057 m^3/min (0.02 cfm) or 4 percent of the average sampling rate, whichever is less.

L_i=Individual leakage rate observed during the leak check conducted prior to the "i^{th}" component change (i=1, 2, 3 . . . n), m^3/min (cfm).

L_p=Leakage rate observed during the post-test leak check, m^3/min (cfm).

m_a=Mass of residue of acetone after evaporation, mg.

m_n=Total amount of particulate matter collected, mg.

M_w=Molecular weight of water, 18.0 g/g-mole (18.0 lb/lb-mole).

P_{bar}=Barometric pressure at the sampling site, mm Hg (in. Hg).

P_s=Absolute stack gas pressure, mm Hg (in. Hg).

P_{std}=Standard absolute pressure, 760 mm Hg (29.92 in. Hg).

R=Ideal gas constant, 0.06236 mm Hg-m^3/°K-g-mole (21.85 in. Hg-ft^3/°R-lb-mole).

T_m=Absolute average dry gas meter temperature (see Figure 17–3), °K (°R).

T_s=Absolute average stack gas temperature (see Figure 17–3), °K (°R).

T_{std}=Standard absolute temperature, 293°K (528°R).

V_a=Volume of acetone blank, ml.

V_{aw}=Volume of acetone used in wash, ml.

V_{lc}=Total volume of liquid collected in impingers and silica gel (see Figure 17–4), ml.

V_m=Volume of gas sample as measured by dry gas meter, dcm (dcf).

$V_{m(std)}$=Volume of gas sample measured by the dry gas meter, corrected to standard conditions, dscm (dscf).

$V_{w(std)}$=Volume of water vapor in the gas sample, corrected to standard conditions, scm (scf).

v_s=Stack gas velocity, calculated by Method 2, Equation 2–9, using data obtained from Method 17, m/sec (ft/sec).

W_a=Weight of residue in acetone wash, mg.

Y=Dry gas meter calibration coefficient.

ΔH=Average pressure differential across the orifice meter (see Figure 17–3), mm H_2O (in. H_2O).

ρ_a=Density of acetone, mg/ml (see label on bottle).

ρ_w=Density of water, 0.9982 g/ml (0.002201 lb/ml).

θ=Total sampling time, min.

θ_1=Sampling time interval, from the beginning of a run until the first component change, min.

θ_i=Sampling time interval, between two successive component changes, beginning with the interval between the first and second changes, min.

θ_p=Sampling time interval, from the final (n^{th}) component change until the end of the sampling run, min.

13.6=Specific gravity of mercury.

60=Sec/min.

100=Conversion to percent.

6.2 Average Dry Gas Meter Temperature and Average Orifice Pressure Drop. See data sheet (Figure 17–3).

6.3 Dry Gas Volume. Correct the sample volume measured by the dry gas meter to standard conditions (20 °C, 760 mm Hg or 68 °F, 29.92 in. Hg) by using Equation 17–1.

$$V_{m(std)} = V_m Y \left(\frac{T_{std}}{T_m}\right)\left[\frac{P_{bar} + \frac{\Delta H}{13.6}}{P_{std}}\right]$$

$$= K_1 V_m Y \frac{P_{bar} + (\Delta H/13.6)}{T_m}$$

Eq. 17–1

Where:

K_1=0.3858°K/mm Hg for metric units; 17.64°R/in. Hg for English units.

NOTE: Equation 17–1 can be used as written unless the leakage rate observed during any of the mandatory leak checks (i.e., the post-test leak check or leak checks conducted prior to component changes) exceeds L_a. If L_p or L_i exceeds L_a, Equation 17–1 must be modified as follows:

(a) Case I. No component changes made during sampling run. In this case, replace V_m in Equation 17–1 with the expression:

$[V_m - (L_p - L_a)\theta]$

(b) Case II. One or more component changes made during the sampling run. In this case, replace V_m in Equation 17–1 by the expression:

$$\{V_m - (L_1 - L_a)\,\theta_1 - \sum_{i=2}^{n} (L_i - L_a)\,\theta_i - (L_p - L_a)\,\theta_p\}$$

and substitute only for those leakage rates (L_i or L_p) which exceed L_a.

6.4 Volume of Water Vapor.

$$V_{w(std)} = V_{1c}\left(\frac{\rho_w}{M_w}\right)\left(\frac{RT_{std}}{P_{std}}\right) = K_2\ V_{1c}$$

Eq. 17–2

Where:

K_2=0.001333 m^3/ml for metric units; 0.04707 ft^3/ml for English units.

6.5 Moisture Content.

$$B_{ws} = \frac{V_{w(std)}}{V_{m(std)} + V_{w(std)}} \qquad \text{Eq. 17-3}$$

6.6 Acetone Blank Concentration.

$$C_a = \frac{M_a}{V_a \rho_a} \qquad \text{Eq. 17-4}$$

6.7 Acetone Wash Blank.

$W_a = C_a\ V_{aw} \rho_a$

Eq. 17–5

6.8 Total Particulate Weight. Determine the total particulate catch from the sum of the weights obtained from Containers 1 and 2 less the acetone blank (see Figure 17–4).

NOTE: Refer to Section 4.1.5 to assist in calculation of results involving two or more filter assemblies or two or more sampling trains.

6.9 Particulate Concentration.

c_s=(0.001 g/mg) ($m_n/V_{m(std)}$)

Eq. 17–6

6.10 Conversion Factors:

From	To	Multiply by
scf	m^3	0.02832
g/ft^3	gr/ft^3	15.43
g/ft^3	lb/ft^3	2.205×10^{-3}
g/ft^3	g/m^3	35.31

6.11 Isokinetic Variation.

6.11.1 Calculation from Raw Data.

$$I = \frac{100\ T_s\ [K_3 V_{1c} + (V_m Y/T_m)\ (P_{bar} + \Delta H/13.6)]}{60\ \theta v_s\ P_s\ A_n}$$

Eq. 17–7

Where:

K_3=0.003454 mm Hg–m^3/ml–°K for metric units; 0.002669 in. Hg-ft^3/ml–°R for English units.

6.11.2 Calculation from Intermediate Values.

$$I = \frac{T_s\ V_{m(std)} P_{std}\ 100}{T_{std}\ v_s\ \theta\ A_n\ P_s\ 60\ (1-B_{ws})}$$

$$= K_4\ \frac{T_s\ V_{m(std)}}{P_s\ v_s\ A_n\ \theta\ (1-B_{ws})}$$

Eq. 17–8

Where:

K_4=4.320 for metric units; 0.09450 for English units.

6.12 Acceptable Results. If 90 percent < I <110 percent, the results are acceptable. If the results are low in comparison to the standard and I is beyond the acceptable range, or, if I is less than 90 percent, the Administrator may opt to accept the results. Use Citation 4 in Bibliography to make judgments. Otherwise, reject the results and repeat the test.

7. *Bibliography*

1. Addendum to Specifications for Incinerator Testing at Federal Facilities. PHS, NCAPC. December 6, 1967.
2. Martin, Robert M., Construction Details of Isokinetic Source-Sampling Equipment. Environmental Protection Agency. Research Triangle Park, NC, APTD–0581. April, 1971.
3. Rom, Jerome J., Maintenance, Calibration, and Operation of Isokinetic Source-Sampling Equipment. Environmental Protection Agency. Research Triangle Park, NC APTD–0576. March, 1972.
4. Smith, W. S., R. T. Shigehara, and W. F. Todd. A Method of Interpreting Stack Sampling Data. Paper Presented at the 63rd Annual Meeting of the Air Pollution Control Association, St. Louis, MO June 14–19, 1970.
5. Smith, W. S., et al., Stack Gas Sampling Improved and Simplified with New Equipment. APCA Paper No. 67–119. 1967.
6. Specifications for Incinerator Testing at Federal Facilities. PHS, NCAPC. 1967.
7. Shigehara, R. T., Adjustments in the EPA Nomograph for Different Pitot Tube Coefficients and Dry Molecular Weights. Stack Sampling News 2:4–11. October, 1974.
8. Vollaro, R. F., A Survey of Commercially Available Instrumentation for the Measurement of Low-Range Gas Velocities. U.S. Environmental Protection Agency, Emission Measurement Branch. Research Triangle Park, NC, November, 1976 (unpublished paper).
9. Annual Book of ASTM Standards. Part 26. Gaseous Fuels; Coal and Coke; Atmospheric Analysis. American Society for Testing and Materials. Philadelphia, PA 1974. pp. 617–622.
10. Vollaro, R. F., Recommended Procedure for Sample Traverses in Ducts Smaller than 12 Inches in Diameter. U.S. Environmental Protection Agency, Emission Measurement Branch. Research Triangle Park, NC, November, 1976.

METHOD 18—MEASUREMENT OF GASEOUS ORGANIC COMPOUND EMISSIONS BY GAS CHROMATOGRAPHY

Introduction

This method should not be attempted by persons unfamiliar with the performance characteristics of gas chromatography, nor by those persons who are unfamiliar with source sampling. Particular care should be

exercised in the area of safety concerning choice of equipment and operation in potentially explosive atmospheres.

1. *Applicability and Principle*

1.1 Applicability. This method applies to the analysis of approximately 90 percent of the total gaseous organics emitted from an industrial source. It does not include techniques to identify and measure trace amounts of organic compounds, such as those found in building air and fugitive emission sources.

This method will not determine compounds that (1) are polymeric (high molecular weight), (2) can polymerize before analysis, or (3) have very low vapor pressures at stack or instrument conditions.

1.2 Principle.

The major organic components of a gas mixture are separated by gas chromatography (GC) and individually quantified by flame ionization, photoionization, electron capture, or other appropriate detection principles.

The retention times of each separated component are compared with those of known compounds under identical conditions. Therefore, the analyst confirms the identity and approximate concentrations of the organic emission components beforehand. With this information, the analyst then prepares or purchases commercially available standard mixtures to calibrate the GC under conditions identical to those of the samples. The analyst also determines the need for sample dilution to avoid detector saturation, gas stream filtration to eliminate particulate matter, and prevention of moisture condensation.

2. *Range and Sensitivity*

2.1 Range. The lower range of this method is determined by the sampling system; adsorbents may be used to concentrate the sample, thus lowering the limit of detection below the 1 part per million (ppm) typically achievable with direct interface or bag sampling. The upper limit is governed by GC detector saturation or column overloading; the upper range can be extended by dilution of sample with an inert gas or by using smaller volume gas sampling loops. The upper limit can also be governed by condensation of higher boiling compounds.

2.2 Sensitivity. The sensitivity limit for a compound is defined as the minimum detectable concentration of that compound, or the concentration that produces a signal-to-noise ratio of three to one. The minimum detectable concentration is determined during the presurvey calibration for each compound.

3. *Precision and Accuracy*

Gas chromatographic techniques typically provide a precision of 5 to 10 percent relative standard deviation (RSD), but an experienced GC operator with a reliable instrument can readily achieve 5 percent RSD. For this method, the following combined GC/operator values are required.

(a) Precision. Duplicate analyses are within 5 percent of their mean value.

(b) Accuracy. Analysis results of prepared audit samples are within 10 percent of preparation values.

(c) Recovery. After developing an appropriate sampling and analytical system for the pollutants of interest, conduct the procedure in Section 7.6. Conduct the appropriate recovery study in Section 7.6 at each sampling point where the method is being applied. Submit the data and results of the recovery procedure with the reporting of results under Section 7.5.

4. *Interferences*

Resolution interferences that may occur can be eliminated by appropriate GC column and detector choice or by shifting the retention times through changes in the column flow rate and the use of temperature programming.

The analytical system is demonstrated to be essentially free from contaminants by periodically analyzing blanks that consist of hydrocarbon-free air or nitrogen.

Sample cross-contamination that occurs when high-level and low-level samples or standards are analyzed alternately, is best dealt with by thorough purging of the GC sample loop between samples.

To assure consistent detector response, calibration gases are contained in dry air. To adjust gaseous organic concentrations when water vapor is present in the sample, water vapor concentrations are determined for those samples, and a correction factor is applied.

5. *Presurvey and Presurvey Sampling.*

Perform a presurvey for each source to be tested. Refer to Figure 18–1. Some of the information can be collected from literature surveys and source personnel. Collect gas samples that can be analyzed to confirm the identities and approximate concentrations of the organic emissions.

5.1 Apparatus. This apparatus list also applies to Sections 6 and 7.

5.1.1 Teflon Tubing. (Mention of trade names or specific products does not constitute endorsement by the U.S. Environmental Protection Agency.) Diameter and length determined by connection requirements of cylinder regulators and the GC. Additional tubing is necessary to connect the GC sample loop to the sample.

5.1.2 Gas Chromatograph. GC with suitable detector, columns, temperature-controlled sample loop and valve assembly, and temperature programable oven, if necessary. The GC shall achieve sensitivity requirements for the compounds under study.

5.1.3 Pump. Capable of pumping 100 ml/min. For flushing sample loop.

5.1.4 Flowmeters. To measure flow rates.

5.1.5 Regulators. Used on gas cylinders for GC and for cylinder standards.

5.1.6 Recorder. Recorder with linear strip chart is minimum acceptable. Integrator (optional) is recommended.

5.1.7 Syringes. 0.5-ml, 1.0- and 10-microliter sizes, calibrated, maximum accuracy (gas tight), for preparing calibration standards. Other appropriate sizes can be used.

5.1.8 Tubing Fittings. To plumb GC and gas cylinders.

5.1.9 Septums. For syringe injections.

5.1.10 Glass Jars. If necessary, clean-colored glass jars with Teflon-lined lids for condensate sample collection. Size depends on volume of condensate.

5.1.11 Soap Film Flow Meter. To determine flow rates.

5.1.12 Tedlar Bags. 10- and 50-liter capacity, for preparation of standards.

5.1.13 Dry Gas Meter with Temperature and Pressure Gauges. Accurate to ±2 percent, for perparation of gas standards.

5.1.14 Midget Impinger/Hot Plate Assembly. For preparation of gas standards.

5.1.15 Sample Flasks. For presurvey samples, must have gas-tight seals.

5.1.16 Adsorption Tubes. If necessary, blank tubes filled with necessary adsorbent (charcoal, Tenax, XAD–2, etc.) for presurvey samples.

5.1.17 Personnel Sampling Pump. Calibrated, for collecting adsorbent tube presurvey samples.

5.1.18 Dilution System. Calibrated, the dilution system is to be constructed following the specifications of an acceptable method.

5.1.19 Sample Probes. Pyrex or stainless steel, of sufficient length to reach centroid of stack, or a point no closer to the walls than 1 m.

5.1.20 Barometer. To measure barometric pressure.

5.2 Reagents.

5.2.1 Deionized Distilled Water.

5.2.2 Methylene Dichloride.

5.2.3 Calibration Gases. A series of standards prepared for every compound of interest.

5.2.4 Organic Compound Solutions. Pure (99.9 percent), or as pure as can reasonably be obtained, liquid samples of all the organic compounds needed to prepare calibration standards.

5.2.5 Extraction Solvents. For extraction of adsorbent tube samples in preparation for analysis.

5.2.6 Fuel. As recommended by the manufacturer for operation of the GC.

5.2.7 Carrier Gas. Hydrocarbon free, as recommended by the manufacturer for operation of the detector and compatability with the column.

5.2.8 Zero Gas. Hydrocarbon free air or nitrogen, to be used for dilutions, blank preparation, and standard preparation.

5.3 Sampling.

5.3.1 Collection of Samples with Glass Sampling Flasks. Presurvey samples can be collected in precleaned 250-ml double-ended glass sampling flasks. Teflon stopcocks, without grease, are preferred. Flasks should be cleaned as follows: Remove the stopcocks from both ends of the flasks, and wipe the parts to remove any grease. Clean the stopcocks, barrels, and receivers with methylene dichloride. Clean all glass ports with a soap solution, then rinse with tap and deionized distilled water. Place the flask in a cool glass annealing furnace and apply heat up to 500 °C. Maintain at this temperature for 1 hour. After this time period, shut off and open the furnace to allow the flask to cool. Grease the stopcocks with stopcock grease and return them to the flask receivers. Purge the assembly with high-purity nitrogen for 2 to 5 minutes. Close off the stopcocks after purging to maintain a slight positive nitrogen pressure. Secure the stopcocks with tape.

Presurvey samples can be obtained either by drawing the gases into the previously evacuated flask or by drawing the gases into and purging the flask with a rubber suction bulb.

5.3.1.1 Evacuated Flask Procedure. Use a high-vacuum pump to evacuate the flask to the capacity of the pump; then close off the stopcock leading to the pump. Attach a 6-mm outside diameter (OD) glass tee to the flask inlet with a short piece of Teflon tubing. Select a 6-mm OD borosilicate sampling probe, enlarged at one end to a 12-mm OD and of sufficient length to reach the centroid of the duct to be sampled. Insert a glass wool plug in the enlarged end of the probe to remove particulate matter. Attach the other end of the probe to the tee with a short piece of Teflon tubing. Connect a rubber suction bulb to the third leg of the tee. Place the filter end of the probe at the centroid of the duct, or at a point no closer to the walls than 1 m, and purge the probe with the rubber suction bulb. After the probe is completely purged and filled with duct gases, open the stopcock to the grab flask until the pressure in the flask reaches duct pressure. Close off the stopcock, and remove the probe from the duct. Remove the tee from the flask and tape the stopcocks to prevent leaks during shipment. Measure and record the duct temperature and pressure.

5.3.1.2 Purged Flask Procedure. Attach one end of the sampling flask to a rubber suction bulb. Attach the other end to a 6-mm OD glass probe as described in Section 5.3.1.1. Place the filter end of the probe at the centroid of the duct, or at a point no closer to the walls than 1 m, and apply suction with the bulb to completely purge the probe and

flask. After the flask has been purged, close off the stopcock near the suction bulb, and then close the stopcock near the probe. Remove the probe from the duct, and disconnect both the probe and suction bulb. Tape the stopcocks to prevent leakage during shipment. Measure and record the duct temperature and pressure.

5.3.2 Flexible Bag Procedure. Tedlar or aluminized Mylar bags can also be used to obtain the presurvey sample. Use new bags, and leak check them before field use. In addition, check the bag before use for contamination by filling it with nitrogen or air, and analyzing the gas by GC at high sensitivity. Experience indicates that it is desirable to allow the inert gas to remain in the bag about 24 hours or longer to check for desorption of organics from the bag. Follow the leak check and sample collection procedures given in Section 7.1.

5.3.3 Determination of Moisture Content. For combustion or water-controlled processes, obtain the moisture content from plant personnel or by measurement during the presurvey. If the source is below 59 °C, measure the wet bulb and dry bulb temperatures, and calculate the moisture content using a psychrometric chart. At higher temperatures, use Method 4 to determine the moisture content.

5.4 Determination of Static Pressure. Obtain the static pressure from the plant personnel or measurement. If a type S pitot tube and an inclined manometer are used, take care to align the pitot tube 90° from the direction of the flow. Disconnect one of the tubes to the manometer, and read the static pressure; note whether the reading is positive or negative.

5.5 Collection of Presurvey Samples with Adsorption Tube. Follow Section 7.4 for presurvey sampling.

6. *Analysis Development*

6.1 Selection of GC Parameters.

6.1.1 Column Choice. Based on the initial contact with plant personnel concerning the plant process and the anticipated emissions, choose a column that provides good resolution and rapid analysis time. The choice of an appropriate column can be aided by a literature search, contact with manufacturers of GC columns, and discussion with personnel at the emission source.

Most column manufacturers keep excellent records of their products. Their technical service departments may be able to recommend appropriate columns and detector type for separating the anticipated compounds, and they may be able to provide information on interferences, optimum operating conditions, and column limitations.

Plants with analytical laboratories may also be able to provide information on appropriate analytical procedures.

6.1.2 Preliminary GC Adjustment. Using the standards and column obtained in Section 6.1.1, perform initial tests to determine appropriate GC conditions that provide good resolution and minimum analysis time for the compounds of interest.

6.1.3 Preparation of Presurvey Samples. If the samples were collected on an adsorbent, extract the sample as recommended by the manufacturer for removal of the compounds with a solvent suitable to the type of GC analysis. Prepare other samples in an appropriate manner.

6.1.4 Presurvey Sample Analysis. Before analysis, heat the presurvey sample to the duct temperature to vaporize any condensed material. Analyze the samples by the GC procedure, and compare the retention times against those of the calibration samples that contain the components expected to be in the stream. If any compounds cannot be identified with certainty by this procedure, identify them by other means such as GC/mass spectroscopy (GC/MS) or GC/infrared techniques. A GC/MS system is recommended.

Use the GC conditions determined by the procedures of Section 6.1.2 for the first injection. Vary the GC parameters during subsequent injections to determine the optimum settings. Once the optimum settings have been determined, perform repeat injections of the sample to determine the retention time of each compound. To inject a sample, draw sample through the loop at a constant rate (100 ml/min for 30 seconds). Be careful not to pressurize the gas in the loop. Turn off the pump and allow the gas in the sample loop to come to ambient pressure. Activate the sample valve, and record injection time, loop temperature, column temperature, carrier flow rate, chart speed, and attenuator setting. Calculate the retention time of each peak using the distance from injection to the peak maximum divided by the chart speed. Retention times should be repeatable within 0.5 seconds.

If the concentrations are too high for appropriate detector response, a smaller sample loop or dilutions may be used for gas samples, and, for liquid samples, dilution with solvent is appropriate. Use the standard curves (Section 6.3) to obtain an estimate of the concentrations.

Identify all peaks by comparing the known retention times of compounds expected to be in the retention times of peaks in the sample. Identify any remaining unidentified peaks which have areas larger than 5 percent of the total using a GC/MS, or estimation of possible compounds by their retention times compared to known compounds, with confirmation by further GC analysis.

6.2 Calibration Standards. Prepare or obtain enough calibration standards so that there are three different concentrations of

each organic compound expected to be measured in the source sample. For each organic compound, select those concentrations that bracket the concentrations expected in the source samples. A calibration standard may contain more than one organic compound. If available, commercial cylinder gases may be used if their concentrations have been certified by direct analysis.

If samples are collected in adsorbent tubes (charcoal, XAD–2, Tenax, etc.), prepare or obtain standards in the same solvent used for the sample extraction procedure. Refer to Section 7.4.3.

Verify the stability of all standards for the time periods they are used. If gas standards are prepared in the laboratory, use one or more of the following procedures.

6.2.1 Preparation of Standards from High Concentration Cylinder Standards. Obtain enough high concentration cylinder standards to represent all the organic compounds expected in the source samples.

Use these high concentration standards to prepare lower concentration standards by dilution, as shown by Figures 18–5 and 18–6.

To prepare the diluted calibration samples, calibrated rotameters are normally used to meter both the high concentration calibration gas and the diluent gas. Other types of flowmeters and commercially available dilution systems can also be used.

Calibrate each flowmeter before use by placing it between the diluent gas supply and suitably sized bubble meter, spirometer, or wet test meter. Record all data shown on Figure 18–4. While it is desirable to calibrate the cylinder gas flowmeter with cylinder gas, the available quantity and cost may preclude it. The error introduced by using the diluent gas for calibration is insignificant for gas mixtures of up to 1,000 to 2,000 ppm of each organic component.

Once the flowmeters are calibrated, connect the flowmeters to the calibration and diluent gas supplies using 6-mm Teflon tubing. Connect the outlet side of the flowmeters through a connector to a leak-free Tedlar bag as shown in Figure 18–5. (See Section 7.1 for bag leak-check procedures.) Adjust the gas flow to provide the desired dilution, and fill the bag with sufficient gas for GC calibration. Be careful not to overfill and cause the bag to apply additional pressure on the dilution system. Record the flow rates of both flowmeters, and the laboratory temperature and atmospheric pressure. Calculate the concentration C_s in ppm of each organic in the diluted gas as follows:

$$C_s = \frac{10^6 (\bar{X} q_c)}{q_c + q_d} \qquad \text{Eq. 18-1}$$

where:

10^6=Conversion to ppm.

X=Mole or volume fraction of the organic in the calibration gas to be diluted.

q_c=Flow rate of the calibration gas to be diluted.

q_d=Diluent gas flow rate.

Single-stage dilutions should be used to prepare calibration mixtures up to about 1:20 dilution factor.

For greater dilutions, a double dilution system is recommended, as shown in Figure 18–6. Fill the Tedlar bag with the dilute gas from the second stage. Record the laboratory temperature, barometric pressure, and static pressure readings. Correct the flow reading for temperature and pressure. Calculate the concentration C_s in ppm of the organic in the final gas mixture as follows:

$$C_s = 10^6 \bar{X} \left(\frac{q_{c1}}{q_{c1} + q_{d1}}\right)\left(\frac{q_{c2}}{q_{c2} + q_{d2}}\right) \qquad \text{Eq. 18-2}$$

Where:

10^6=Conversion to ppm.

X=Mole or volume fraction of the organic in the calibration gas to be diluted.

q_{c1}=Flow rate of the calibration gas to be diluted in stage 1.

q_{c2}=Flow rate of the calibration gas to be diluted in stage 2.

q_{d1}=Flow rate of diluent gas in stage 1.

q_{d2}=Flow rate of diluent gas in stage 2.

Further details of the calibration methods for flowmeters and the dilution system can be found in Citation 21 in the Bibliography.

6.2.2 Preparation of Standards from Volatile Materials. Record all data shown on Figure 18–3.

6.2.2.1 Gas Injection Technique. This procedure is applicable to organic compounds that exist entirely as a gas at ambient conditions. Evacuate a 10-liter Tedlar bag that has

passed a leak-check (see Section 7.1), and meter in 5.0 liters of air or nitrogen through a dry gas meter that has been calibrated in a manner consistent with the procedure described in Section 5.1.1 of Method 5. While the bag is filling use a 0.5-ml syringe to inject a known quantity of ''pure'' gas of the organic compound through the wall of the bag, or through a septum-capped tee at the bag inlet. Withdraw the syringe needle, and immediately cover the resulting hole with a piece of masking tape. In a like manner, prepare dilutions having other concentrations. Prepare a minimum of three concentrations. Place each bag on a smooth surface, and alternately depress opposite sides of the bag 50 times to mix the gases. Record the average meter temperature and pressure, the gas volume and the barometric pressure. Record the syringe temperature and pressure before injection.

Calculate each organic standard concentration C_s in ppm as follows:

$$C_s = \frac{G_v \times 10^6 \frac{293}{T_s} \frac{P_s}{760}}{V_m Y \frac{293}{T_m} \frac{P_m}{760} 1000} = \frac{G_v \times 10^3 \frac{P_s T_m}{T_s P_m}}{V_m Y} \qquad \text{Eq. 18-3}$$

where:

G_v=Gas volume or organic compound injected, ml.

10^6=Conversion to ppm.

P_s=Absolute pressure of syringe before injection, mm Hg.

T_s=Absolute temperature of syringe before injection, °K.

V_m=Gas volume indicated by dry gas meter, liters.

Y=Dry gas meter calibration factor, dimensionless.

P_m=Absolute pressure of dry gas meter, mm Hg.

T_m=Absolute temperature of dry gas meter, °K.

1000=Conversion factor, ml/liter.

6.2.2.2 Liquid Injection Technique. Use the equipment shown in Figure 18–8. Calibrate the dry gas meter as described in Section 6.2.2.1 with a wet test meter or a spirometer. Use a water manometer for the pressure gauge and glass, Teflon, brass, or stainless steel for all connections. Connect a valve to the inlet of the 50-liter Tedlar bag.

To prepare the standards, assemble the equipment as shown in Figure 18–8, and leak-check the system. Completely evacuate the bag. Fill the bag with hydrocarbon-free air, and evacuate the bag again. Close the inlet valve.

Turn on the hot plate, and allow the water to reach boiling, Connect the bag to the impinger outlet. Record the initial meter reading, open the bag inlet valve, and open the cylinder. Adjust the rate so that the bag will be completely filled in approximately 15 minutes. Record meter pressure and temperature, and local barometric pressure.

Allow the liquid organic to equilibrate to room temperature. Fill the 1.0- or 10-microliter syringe to the desired liquid volume with the organic. Place the syringe needle into the impinger inlet using the septum provided, and inject the liquid into the flowing air stream. Use a needle of sufficient length to permit injection of the liquid below the air inlet branch of the tee. Remove the syringe.

When the bag is filled, stop the pump, and close the bag inlet valve. Record the final meter reading, temperature, and pressure.

Disconnect the bag from the impinger outlet, and either set it aside for at least 1 hour, or massage the bag to insure complete mixing.

Measure the solvent liquid density at room temperature by accurately weighing a known volume of the material on an analytical balance to the nearest 1.0 milligram. A ground-glass stoppered 25-mil volumetric flask or a glass-stoppered specific gravity bottle is suitable for weighing. Calculate the result in terms of g/ml. As an alternative, literature values of the density of the liquid at 20 °C may be used.

Calculate each organic standard concentration C_s in ppm as follows:

$$C_s = \frac{\frac{L_v \rho}{M}(24.055 \times 10^6)}{V_m Y \frac{293}{T_m} \frac{P_m}{760} 1000} = 6.24 \times 10^4 \frac{L_v \rho T_m}{M V_m Y P_m} \qquad \text{Eq. 18-4}$$

where:

L_v=Liquid volume of organic injected, µl.

µl=Liquid organic density as determined, g/ml.

M=Molecular weight of organic, g/g-mole.

24.055=Ideal gas molar volume at 293 °K and 760 mm Hg, liters/g-mole.

10^6=Conversion to ppm.

1000=Conversion factor, µl/ml.

6.3 Preparation of Calibration Curves. Establish proper GC conditions, then flush the sampling loop for 30 seconds at a rate of 100 ml/min. Allow the sample loop pressure to equilibrate to atmospheric pressure, and activate the injection valve. Record the standard concentration, attenuator factor, injection time, chart speed, retention time, peak area, sample loop temperature, column temperature, and carrier gas flow rate. Repeat the standard injection until two consecutive injections give area counts within 5 percent of their average. The average value multipled by the attenuator factor is then the calibration area value for the concentration.

Repeat this procedure for each standard. Prepare a graphical plot of concentration (C_s) versus the calibration area values. Perform a regression analysis, and draw the least squares line.

6.4 Relative Response Factors. The calibration curve generated from the standards for a single organic can usually be related to each of the individual GC response curves that are developed in the laboratory for all the compounds in the source. In the field, standards for that single organic can then be used to ''calibrate'' the GC for all the organics present. This procedure should first be confirmed in the laboratory by preparing and analyzing calibration standards containing multiple organic compounds.

6.5 Quality Assurance for Laboratory Procedures. Immediately after the preparation of the calibration curves and prior to the presurvey sample analysis, the analysis audit described in 40 CFR Part 61, Appendix C, Procedure 2: ''Procedure for Field Auditing GC Analysis,'' should be performed. The information required to document the analysis of the audit samples has been included on the example data sheets shown in Figures 18–3 and 18–7. The audit analyses should agree with the audit concentrations within 10 percent. When available, the tester may obtain audit cylinders by contacting: U.S. Environmental Protection Agency, Environmental Monitoring Systems Laboratory, Quality Assurance Division (MD–77), Research Triangle Park, North Carolina 27711. Audit cylinders obtained from a commercial gas manufacturer may be used provided that (a) the gas manufacturer certifies the audit cylinder in a manner similar to the procedure described in 40 CFR Part 61, Appendix B, Method 106, Section 5.2.3.1, and (b) the gas manufacturer obtains an independent analysis of the audit cylinders to verify this analysis. Independent analysis is defined as an analysis performed by an individual other than the individual who performs the gas manufacturer's analysis, while using calibration standards and analysis equipment different from those used for the gas manufacturer's analysis. Verification is complete and acceptable when the independent analysis concentration is within 5 percent of the gas manufacturer's concentration.

7. *Final Sampling and Analysis Procedure*

Considering safety (flame hazards) and the source conditions, select an appropriate sampling and analysis procedure (Sections 7.1, 7.2, 7.3, or 7.4). In situations where a hydrogen flame is a hazard and no intrinsically safe GC is suitable, use the flexible bag collection technique or an adsorption technique. If the source temperature is below 100 °C, and the organic concentrations are suitable for the detector to be used, use the direct interface method. If the source gases require dilution, use a dilution interface and either the bag sample or adsorption tubes. The choice between these two techniques will depend on the physical layout of the site, the source temperature, and the storage stability of the compounds if collected in the bag. Sample polar compounds by direct interfacing or dilution interfacing to prevent sample loss by adsorption on the bag.

7.1 Integrated Bag Sampling and Analysis.

7.1.1 Evacuated Container Sampling Procedure. In this procedure, the bags are filled by evacuating the rigid air-tight containers that hold the bags. Use a field sample data sheet as shown in Figure 18–10. Collect triplicate sample from each sample location.

7.1.1.1 Apparatus.

7.1.1.1.1 Probe. Stainless steel, Pyrex glass, or Teflon tubing probe, according to the duct temperature, with 6.4-mm OD Teflon tubing of sufficient length to connect to

the sample bag. Use stainless steel or Teflon unions to connect probe and sample line.

7.1.1.1.2 Quick Connects. Male (2) and female (2) of stainless steel construction.

7.1.1.1.3 Needle Valve. To control gas flow.

7.1.1.1.4 Pump. Leakless Teflon-coated diaphragm-type pump or equivalent. To deliver at least 1 liter/min.

7.1.1.1.5 Charcoal Adsorption Tube. Tube filled with activated charcoal, with glass wool plugs at each end, to adsorb organic vapors.

7.1.1.1.6 Flowmeter. 0 to 500-ml flow range; with manufacturer's calibration curve.

7.1.1.2 Sampling Procedure. To obtain a sample, assemble the sample train as shown in Figure 18–9. Leak check both the bag and the container. Connect the vacuum line from the needle valve to the Teflon sample line from the probe. Place the end of the probe at the centroid of the stack, or at a point no closer to the walls than 1 m, and start the pump with the needle valve adjusted to yield a flow of 0.5 liter/minute. After allowing sufficient time to purge the line several times, connect the vacuum line to the bag, and evacuate until the rotameter indicates no flow. Then position the sample and vacuum lines for sampling, and begin the actual sampling, keeping the rate proportional to the stack velocity. As a precaution, direct the gas exiting the rotameter away from sampling personnel. At the end of the sample period, shut off the pump, disconnect the sample line from the bag, and disconnect the vacuum line from the bag container, Record the source temperature, barometric pressure, ambient temperature, sampling flow rate, and initial and final sampling time on the data sheet shown in Figure 18–10. Protect the Tedlar bag and its container from sunlight. When possible, perform the analysis within 2 hours of sample collection.

7.1.2 Direct Pump Sampling Procedure. Follow 7.1.1, except place the pump and needle valve between the probe and the bag. Use a pump and needle valve constructed of stainless steel or some other material not affected by the stack gas. Leak check the system, and then purge with stack gas before the connecting to the previously evacuated bag.

7.1.3 Explosion Risk Area Bag Sampling Procedure. Follow 7.1.1 except replace the pump with another evacuated can (see Figure 18–9a). Use this method whenever there is a possibility of an explosion due to pumps, heated probes, or other flame producing equipment.

7.1.4 Other Modified Bag Sampling Procedures. In the event that condensation is observed in the bag while collecting the sample and a direct interface system cannot be used, heat the bag during collection, and maintain it at a suitably elevated temperature during all subsequent operations. (Note: Take care to leak check the system prior to the dilutions so as not to create a potentially explosive atmosphere.) As an alternative, collect the sample gas, and simultaneously dilute it in the Tedlar bag.

In the first procedure, heat the box containing the sample bag to the source temperature, provided the components of the bag and the surrounding box can withstand this temperature. Then transport the bag as rapidly as possible to the analytical area while maintaining the heating, or cover the box with an insulating blanket. In the analytical area, keep the box heated to source temperature until analysis. Be sure that the method of heating the box and the control for the heating circuit are compatible with the safety restrictions required in each area.

To use the second procedure, prefill the Tedlar bag with a known quantity of inert gas. Meter the inert gas into the bag according to the procedure for the preparation of gas concentration standards of volatile liquid materials (Section 6.2.2.2), but eliminate the midget impinger section. Take the partly filled bag to the source, and meter the source gas into the bag through heated sampling lines and a heated flowmeter, or Teflon positive displacement pump. Verify the dilution factors periodically through dilution and analysis of gases of known concentration.

7.1.5 Analysis of Bag Samples.

7.1.5.1 Apparatus. Same as Section 5. A minimum of three gas standards are required.

7.1.5.2 Procedure. Establish proper GC operating conditions as described in Section 6.3, and record all data listed in Figure 18–7. Prepare the GC so that gas can be drawn through the sample valve. Flush the sample loop with gas from one of the three calibration mixtures, and activate the valve. Obtain at least two chromatograms for the mixture. The results are acceptable when the peak areas from two consecutive injections agree to within 5 percent of their average. If they do not, run additional analyses or correct the analytical techniques until this requirement is met. Then analyze the other two calibration mixtures in the same manner. Prepare a calibration curve as described in the same manner. Prepare a calibration curve as described in Section 6.3.

Analyze the source gas samples by connecting each bag to the sampling valve with a piece of Teflon tubing identified for that bag. Follow the specifications on replicate analyses specified for the calibration gases. Record the data listed in Figure 18–11. If certain items do not apply, use the notation ''N.A.'' After all samples have been analyzed, repeat the analyses of the calibration gas mixtures, and generate a second calibration curve. Use an average of the two curves to determine the sample gas concentrations. If the two calibration curves differ by more than 5 percent from their mean value, then

report the final results by comparison to both calibration curves.

7.1.6 Determination of Bag Water Vapor Content. Measure and record the ambient temperature and barometric pressure near the bag. From a water saturation vapor pressure table, determine and record the water vapor content as a decimal figure. (Assume the relative humidity to be 100 percent unless a lesser value is known.) If the bag has been maintained at an elevated temperature as described in Section 7.1.4, determine the stack gas water content by Method 4.

7.1.7 Quality Assurance. Immediately prior to the analysis of the stack gas samples, perform audit analyses as described in Section 6.5. The audit analyses must agree with the audit concentrations within 10 percent. If the results are acceptable, proceed with the analyses of the source samples. If they do not agree within 10 percent, then determine the reason for the discrepancy, and take corrective action before proceeding.

7.1.8 Emission Calculations. From the average calibration curve described in Section 7.1.5., select the value of C_s that corresponds to the peak area. Calculate the concentration C_c in ppm, dry basis, of each organic in the sample as follows:

$$C_c = \frac{C_s P_r T_i F_r}{P_i T_r (1 - B_{ws})} \quad \text{Eq. 18-5}$$

where:

C_s=Concentration of the organic from the calibration curve, ppm.

P_r=Reference pressure, the barometric pressure or absolute sample loop pressure recorded during calibration, mm Hg.

T_i=Sample loop temperature at the time of sample analysis, °K.

F_r=Relative response factor (if applicable, see Section 6.4).

P_i=Barometric or absolute sample loop pressure at time of sample analysis, mm Hg.

T_r=Reference temperature, the termperature of the sample loop recorded during calibration, °K.

B_{ws}=Water vapor content of the bag sample or stack gas, proportion by volume.

7.2 Direct Interface Sampling and Analysis Procedure. The direct interface procedure can be used provided that the moisture content of the gas does not interfere with the analysis procedure, the physical requirements of the equipment can be met at the site, and the source gas concentration is low enough that detector saturation is not a problem. Adhere to all safety requirements with this method.

7.2.1 Apparatus.

7.2.1.1 Probe. Constructed of stainless steel, Pyrex glass, or Teflon tubing as required by duct temperature, 6.4-mm OD, enlarged at duct end to contain glass wool plug. If necessary, heat the probe with heating tape or a special heating unit capable of maintaining duct temperature.

7.2.1.2 Sample Lines. 6.4-mm OD Teflon lines, heat-traced to prevent condensation of material.

7.2.1.3 Quick Connects. To connect sample line to gas sampling valve on GC instrument and to pump unit used to withdraw source gas. Use a quick connect or equivalent on the cylinder or bag containing calibration gas to allow connection of the calibration gas to the gas sampling valve.

7.2.1.4 Thermocouple Readout Device. Potentiometer or digital thermometer, to measure source temperature and probe temperature.

7.2.1.5 Heated Gas Sampling Valve. Of two-position, six-port design, to allow sample loop to be purged with source gas or to direct source gas into the GC instrument.

7.2.1.6 Needle Valve. To control gas sampling rate from the source.

7.2.1.7 Pump. Leakless Teflon-coated diaphragm-type pump or equivalent, capable of at least 1 liter/minute sampling rate.

7.2.1.8 Flowmeter. Of suitable range to measure sampling rate.

7.2.1.9 Charcoal Adsorber. To adsorb organic vapor collected from the source to prevent exposure of personnel to source gas.

7.2.1.10 Gas Cylinders. Carrier gas (helium or nitrogen), and oxygen and hydrogen for a flame ionization detector (FID) if one is used.

7.2.1.11 Gas Chromatograph. Capable of being moved into the field, with detector, heated gas sampling valve, column required to complete separation of desired components, and option for temperature programming.

7.2.1.12 Recorder/Integrator. To record results.

7.2.2 Procedure. To obtain a sample, assemble the sampling system as shown in Figure 18–12. Make sure all connections are tight. Turn on the probe and sample line heaters. As the temperature of the probe and heated line approaches the source temperature as indicated on the thermocouple readout device, control the heating to maintain a temperature of 0 to 3 °C above the source temperature. While the probe and heated line are being heated, disconnect the sample line from the gas sampling valve, and attach the line from the calibration gas mixture. Flush the sample loop with calibration gas and analyze a portion of that gas. Record the results. After the calibration gas sample has been flushed into the GC instrument, turn the gas sampling valve to flush position, then reconnect the probe sample line to the valve. Place the inlet of the probe at the centroid of the duct, or at a point no closer to the walls than 1 m, and draw source gas into the probe, heated line, and sample loop. After thorough flushing, analyze the sample

using the same conditions as for the calibration gas mixture. Repeat the analysis on an additional sample. Measure the peak areas for the two samples, and if they do not agree to within 5 percent of their mean value, analyze additional samples until two consecutive analyses meet this criteria. Record the data. After consistent results are obtained, remove the probe from the source and analyze a second calibration gas mixture. Record this calibration data and the other required data on the data sheet shown in Figure 18–11, deleting the dilution gas information.

(NOTE: Take care to draw all samples, calibration mixtures, and audits through the sample loop at the same pressure.)

7.2.3 Determination of Stack Gas Moisture Content. Use Method 4 to measure the stack gas moisture content.

7.2.4 Quality Assurance. Same as Section 7.1.7. Introduce the audit gases in the sample line immediately following the probe.

7.2.5 Emission Calculations. Same as Section 7.1.8.

7.3 Dilution Interface Sampling and Analysis Procedure. Source samples that contain a high concentration of organic materials may require dilution prior to analysis to prevent saturating the GC detector. The apparatus required for this direct interface procedure is basically the same as that described in the Section 7.2, except a dilution system is added between the heated sample line and the gas sampling valve. The apparatus is arranged so that either a 10:1 or 100:1 dilution of the source gas can be directed to the chromatograph. A pump of larger capacity is also required, and this pump must be heated and placed in the system between the sample line and the dilution apparatus.

7.3.1 Apparatus. The equipment required in addition to that specified for the direct interface system is as follows:

7.3.1.1 Sample Pump. Leakless Teflon-coated diaphragm-type that can withstand being heated to 120 °C and deliver 1.5 liters/minute.

7.3.1.2 Dilution Pumps. Two Model A–150 Komhyr Teflon positive displacement type delivering 150 cc/minute, or equivalent. As an option, calibrated flowmeters can be used in conjunction with Teflon-coated diaphragm pumps.

7.3.1.3 Valves. Two Teflon three-way valves, suitable for connecting to 6.4-mm OD Teflon tubing.

7.3.1.4 Flowmeters. Two, for measurement of diluent gas, expected delivery flow rate to be 1,350 cc/min.

7.3.1.5 Diluent Gas with Cylinders and Regulators. Gas can be nitrogen or clean dry air, depending on the nature of the source gases.

7.3.1.6 Heated Box. Suitable for being heated to 120 °C, to contain the three pumps, three-way valves, and associated connections. The box should be equipped with quick connect fittings to facilitate connection of: (1) The heated sample line from the probe, (2) the gas sampling valve, (3) the calibration gas mixtures, and (4) diluent gas lines. A schematic diagram of the components and connections is shown in Figure 18–13.

(NOTE: Care must be taken to leak check the system prior to the dilutions so as not to create a potentially explosive atmosphere.)

The heated box shown in Figure 18–13 is designed to receive a heated line from the probe. An optional design is to build a probe unit that attaches directly to the heated box. In this way, the heated box contains the controls for the probe heaters, or, if the box is placed against the duct being sampled, it may be possible to eliminate the probe heaters. In either case, a heated Teflon line is used to connect the heated box to the gas sampling valve on the chromatograph.

7.3.2 Procedure. Assemble the apparatus by connecting the heated box, shown in Figure 18–13, between the heated sample line from the probe and the gas sampling valve on the chromatograph. Vent the source gas from the gas sampling valve directly to the charcoal filter, eliminating the pump and rotameter. Heat the sample probe, sample line, and heated box. Insert the probe and source thermocouple to the centroid of the duct, or to a point no closer to the walls than 1 m. Measure the source temperature, and adjust all heating units to a temperature 0 to 3 °C above this temperature. If this temperature is above the safe operating temperature of the Teflon components, adjust the heating to maintain a temperature high enough to prevent condensation of water and organic compounds. Verify the operation of the dilution system by analyzing a high concentration gas of known composition through either the 10:1 or 100:1 dilution stages, as appropriate. (If necessary, vary the flow of the diluent gas to obtain other dilution ratios.) Determine the concentration of the diluted calibration gas using the dilution factor and the calibration curves prepared in the laboratory. Record the pertinent data on the data sheet shown in Figure 18–11. If the data on the diluted calibration gas are not within 10 percent of the expected values, determine whether the chromatograph or the dilution system is in error, and correct it. Verify the GC operation using a low concentration standard by diverting the gas into the sample loop, bypassing the dilution system. If these analyses are not within acceptable limits, correct the dilution system to provide the desired dilution factors. Make this correction by diluting a high-concentration standard gas mixture to adjust the dilution ratio as required.

Once the dilution system and GC operations are satisfactory, proceed with the analysis of source gas, maintaining the same dilution settings as used for the standards.

Repeat the analyses until two consecutive values do not vary by more than 5 percent from their mean value are obtained.

Repeat the analysis of the calibration gas mixtures to verify equipment operation. Analyze the two field audit samples using either the dilution system, or directly connect to the gas sampling valve as required. Record all data and report the results to the audit supervisor.

7.3.3 Determination of Stack Gas Moisture Content. Same as Section 7.2.3.

7.3.4 Quality Assurance. Same as Section 7.2.4.

7.3.5 Emission Calculations. Same as Section 7.2.5, with the dilution factor applied.

7.4 Adsorption Tube Procedure (Alternative Procedure). It is suggested that the tester refer to the National Institute of Occupational Safety and Health (NIOSH) method for the particular organics to be sampled. The principal interferent will be water vapor. If water vapor is present at concentrations above 3 percent, silica gel should be used in front of the charcoal. Where more than one compound is present in the emissions, then develop relative adsorptive capacity information.

7.4.1 Additional Apparatus. In addition to the equipment listed in the NIOSH method for the particular organic(s) to be sampled, the following items (or equivalent) are suggested.

7.4.1.1 Probe (Optional). Borosilicate glass or stainless steel, approximately 6-mm ID, with a heating system if water condensation is a problem, and a filter (either in-stack or out-stack heated to stack temperature) to remove particulate matter. In most instances, a plug of glass wool is a satisfactory filter.

7.4.1.2 Flexible Tubing. To connect probe to adsorption tubes. Use a material that exhibits minimal sample adsorption.

7.4.1.3 Leakless Sample Pump. Flow controlled, constant rate pump, with a set of limiting (sonic) orifices to provide pumping rates from approximately 10 to 100 cc/min.

7.4.1.4 Bubble-Tube Flowmeter. Volume accuracy within ± 1 percent, to calibrate pump.

7.4.1.5 Stopwatch. To time sampling and pump rate calibration.

7.4.1.6 Adsorption Tubes. Similar to ones specified by NIOSH, except the amounts of adsorbent per primary/backup sections are 800/200 mg for charcoal tubes and 1040/260 mg for silica gel tubes. As an alternative, the tubes may contain a porous polymer adsorbent such as Tenax GC or XAD–2.

7.4.1.7 Barometer. Accurate to 5 mm Hg, to measure atmospheric pressure during sampling and pump calibration.

7.4.1.8 Rotameter. 0 to 100 cc/min, to detect changes in flow rate during sampling.

7.4.2 Sampling and Analysis. It is suggested that the tester follow the sampling and analysis portion of the respective NIOSH method section entitled ''Procedure.'' Calibrate the pump and limiting orifice flow rate through adsorption tubes with the bubble tube flowmeter before sampling. The sample system can be operated as a ''recirculating loop'' for this operation. Record the ambient temperature and barometric pressure. Then, during sampling, use the rotameter to verify that the pump and orifice sampling rate remains constant.

Use a sample probe, if required, to obtain the sample at the centroid of the duct, or at a point no closer to the walls than 1 m. Minimize the length of flexible tubing between the probe and adsorption tubes. Several adsorption tubes can be connected in series, if the extra adsorptive capacity is needed. Provide the gas sample to the sample system at a pressure sufficient for the limiting orifice to function as a sonic orifice. Record the total time and sample flow rate (or the number of pump strokes), the barometric pressure, and ambient temperature. Obtain a total sample volume commensurate with the expected concentration(s) of the volatile organic(s) present, and recommended sample loading factors (weight sample per weight adsorption media). Laboratory tests prior to actual sampling may be necessary to predetermine this volume. When more than one organic is present in the emissions, then develop relative adsorptive capacity information. If water vapor is present in the sample at concentrations above 2 to 3 percent, the adsorptive capacity may be severely reduced. Operate the gas chromatograph according to the manufacture's instructions. After establishing optimum conditions, verify and document these conditions during all operations. Analyze the audit samples (see Section 7.4.4.3), then the emission samples. Repeat the analysis of each sample until the relative deviation of two consecutive injections does not exceed 5 percent.

7.4.3 Standards and Calibration. The standards can be prepared according to the respective NIOSH method. Use a minimum of three different standards; select the concentrations to bracket the expected average sample concentration. Perform the calibration before and after each day's sample analyses. Prepare the calibration curve by using the least squares method.

7.4.4 Quality Assurance.

7.4.4.1 Determine the recovery efficiency of the pollutants of interest according to Section 7.6.

7.4.4.2 Determination of Sample Collection Efficiency. For the source samples, analyze the primary and backup portions of the adsorption tubes separately. If the backup portion exceeds 10 percent of the total amount (primary and backup), repeat the sampling with a larger sampling portion.

7.4.4.3 Analysis Audit. Immediately before the sample analyses, analyze the two audits

in accordance with Section 7.4.2. The analysis audit shall agree with the audit concentration within 10 percent.

7.4.4.4 Pump Leak Checks and Volume Flow Rate Checks. Perform both of these checks immediately after sampling with all sampling train components in place. Perform all leak checks according to the manufacturer's instructions, and record the results. Use the bubble-tube flowmeter to measure the pump volume flow rate with the orifice used in the test sampling, and the result. If it has changed by more than 5 but less than 20 percent, calculate an average flow rate for the test. If the flow rate has changed by more than 20 percent, recalibrate the pump and repeat the sampling.

7.4.4.5 Calculations. All calculations can be performed according to the respective NIOSH method. Correct all sample volumes to standard conditions. If a sample dilution system has been used, multiply the results by the appropriate dilution ratio. Correct all results according to the applicable procedure in Section 7.6. Report results as ppm by volume, dry basis.

7.5 Reporting of Results. At the completion of the field analysis portion of the study, ensure that the data sheets shown in Figure 18–11 have been completed. Summarize this data on the data sheets shown in Figure 18–15.

7.6 Recovery Study. After conducting the presurvey and identifying all of the pollutants of interest, conduct the appropriate recovery study during the test based on the sampling system chosen for the compounds of interest.

7.6.1 Recovery Study for Direct Interface or Dilution Interface Sampling. If the procedures in Section 7.2 or 7.3 are to be used to analyze the stack gas, conduct the calibration procedure as stated in Section 7.2.2 or 7.3.2, as appropriate. Upon successful completion of the appropriate calibration procedure, attach the mid-level calibration gas for at least one target compound to the inlet of the probe or as close as possible to the inlet of the probe, but before the filter. Repeat the calibration procedure by sampling and analyzing the mid-level calibration gas through the entire sampling and analytical system until two consecutive samples are within 5 percent of their mean value. The mean of the calibration gas response directly to the analyzer and the mean of the calibration gas response sampled through the probe shall be within 10 percent of each other. If the difference in the two means is greater than 10 percent, check for leaks throughout the sampling system and repeat the analysis of the standard through the sampling system until this criterion is met.

7.6.2 Recovery Study for Bag Sampling. Follow the procedures for bag sampling and analysis in Section 7.1. After analyzing all three bag samples, choose one of the bag samples and analyze twice more (this bag will become the spiked bag). Spike the chosen bag sample with a known mixture (gaseous or liquid) of all of the target pollutants. Follow a procedure similar to the calibration standard preparation procedure listed in Section 6.2, as appropriate. The theoretical concentration, in ppm, of each spiked compound in the bag shall be 40 to 60 percent of the average concentration measured in the three bag samples. If a target compound was not detected in the bag samples, the concentration of that compound to be spiked shall be 5 times the limit of detection for that compound. Analyze the bag three times after spiking. Calculate the average fraction recovered (R) of each spiked target compound with the following equation:

$$R = \frac{t - u}{s}$$

where

t = measured average concentration (ppm) of target compound and source sample (analysis results subsequent to bag spiking)

u = source sample average concentration (ppm) of target compound in the bag (analysis results before bag spiking)

s = theoretical concentration (ppm) of spiked target compound in the bag

For the bag sampling technique to be considered valid for a compound, $0.70 \leq R \leq 1.30$. If the R value does not meet this criterion for a target compound, the sampling technique is not acceptable for that compound, and therefore another sampling technique shall be evaluated for acceptance (by repeating the recovery study with another sampling technique). Report the R value in the test report and correct all field measurements with the calculated R value for that compound by using the following equation:

$$\text{Reported Result} = \frac{\text{Measured Concentration (ppm)}}{R}$$

7.6.3 Recovery Study for Adsorption Tube Sampling. If following the adsorption tube procedure in Section 7.4, conduct a recovery study of the compounds of interest during

the actual field test. Set up two identical sampling trains. Collocate the two sampling probes in the stack. The probes shall be placed in the same horizontal plane, where the first probe tip is 2.5 cm from the outside edge of the other and with a pitot tube on the outside of each probe. One of the sampling trains shall be designated the spiked train and the other the unspiked train. Spike all of the compounds of interest (in gaseous or liquid form) onto the adsorbent tube(s) in the spiked train before sampling. The mass of each spiked compound shall be 40 to 60 percent of the mass expected to be collected with the unspiked train. Sample the stack gas into the two trains simultaneously. Analyze the adsorbents from the two trains utilizing the same analytical procedure and instrumentation. Determine the fraction of spiked compound recovered (R) using the following equations.

$$m_v = \frac{m_s}{v_s} - \frac{m_u}{v_u}$$

where

m_v = mass per volume of spiked compound measured (μg/L).

m_s = total mass of compound measured on adsorbent with spiked train (μg).

v_s = volume of stack gas sampled with spiked train (L).

m_u = total mass of compound measured on adsorbent with unspiked train (μg).

v_u = volume of stack gas sampled with unspiked train (L).

$$R = \frac{m_v \times v_s}{S}$$

where S = theoretical mass of compound spiked onto adsorbent in spiked train (μg).

7.6.3.1 Repeat the procedure in Section 7.6.3 twice more, for a total of three runs. In order for the adsorbent tube sampling and analytical procedure to be acceptable for a compound, $0.70 \leq R \leq 1.30$ (R in this case is the average of three runs). If the average R value does not meet this criterion for a target compound, the sampling technique is not acceptable for that compound, and therefore another sampling technique shall be evaluated for acceptance (by repeating the recovery study with another sampling technique). Report the R value in the test report and correct all field measurements with the calculated R value for that compound by using the following equation:

$$\text{Reported Result} = \frac{\text{Measured Concentration (ppm)}}{R}$$

8. *Bibliography*

1. American Society for Testing and Materials. C_1 Through C_5 Hydrocarbons in the Atmosphere by Gas Chromatography. ASTM D 2820–72, Part 23. Philadelphia, Pa. 23:950–958. 1973.

2. Corazon, V. V. Methodology for Collecting and Analyzing Organic Air Pollutants. U.S. Environmental Protection Agency. Publication No. EPA–600/2–79–042. February 1979.

3. Dravnieks, A., B. K. Krotoszynski, J. Whitfield, A. O'Donnell, and T. Burgwald. Environmental Science and Technology. *5*(12):1200–1222. 1971.

4. Eggertsen, F. T., and F. M. Nelsen. Gas Chromatographic Analysis of Engine Exhaust and Atmosphere. Analytical Chemistry. *30*(6): 1040–1043. 1958.

5. Feairheller, W. R., P. J. Marn, D. H. Harris, and D. L. Harris. Technical Manual for Process Sampling Strategies for Organic Materials. U.S. Environmental Protection Agency. Research Triangle Park, NC. Publication No. EPA 600/2–76–122. April 1976. 172 p.

6. FR, 39 FR 9319–9323. 1974.

7. FR, 39 FR 32857–32860. 1974.

8. FR, 41 FR 23069–23072 and 23076–23090. 1976.

9. FR, 41 FR 46569–46571. 1976.

10. FR, 42 FR 41771–41776. 1977.

11. Fishbein, L. Chromatography of Environmental Hazards, Volume II. Elsevier Scientific Publishing Company. NY, NY. 1973.

12. Hamersma, J. W., S. L. Reynolds, and R. F. Maddalone. EPA/IERL–RTP Procedures Manual: Level 1 Environmental Assessment. U.S. Environmental Protection Agency. Research Triangle Park, NC. Publication No. EPA 600/276–160a. June 1976. 130 p.

13. Harris, J. C., M. J. Hayes, P. L. Levins, and D. B. Lindsay. EPA/IERL–RTP Procedures for Level 2 Sampling and Analysis of Organic Materials. U.S. Environmental Protection Agency. Research Triangle Park, NC. Publication No. EPA 600/7–79–033. February 1979. 154 p.

14. Harris, W. E., H. W. Habgood. Programmed Temperature Gas Chromatography. John Wiley & Sons, Inc. New York. 1966.

15. Intersociety Committee. Methods of Air Sampling and Analysis. American Health Association. Washington, DC. 1972.

16. Jones, P. W., R. D. Grammar, P. E. Strup, and T. B. Stanford. Environmental Science and Technology.------ *10:*806–810. 1976.

17. McNair Han Bunelli, E. J. Basic Gas Chromatography. Consolidated Printers. Berkeley. 1969.

18. Nelson, G. O. Controlled Test Atmospheres, Principles and Techniques. Ann Arbor. Ann Arbor Science Publishers. 1971. 247 p.

19. NIOSH Manual of Analytical Methods, Volumes 1, 2, 3, 4, 5, 6, 7. U.S. Department of Health and Human Services National Institute for Occupational Safety and Health. Center for Disease Control. 4676 Columbia Parkway, Cincinnati, Ohio 45226. April 1977–August 1981. May be available from the Superintendent of Documents, Government Printing Office, Washington, DC 20402. Stock Number/Price: Volume 1—017–033–00267–3/$13, Volume 2—017–033–00260–6/$11, Volume 3—017–033–00261–4/$14, Volume 4—017–033–00317–3/$7.25, Volume 5—017–033–00349–1/$10, Volume 6—017–033–00369–6/$9, and Volume 7—017–033–00396–5/$7. Prices subject to change. Foreign orders add 25 percent.

20. Schuetzle, D., T. J. Prater, and S. R. Ruddell. Sampling and Analysis of Emissions from Stationary Sources; I. Odor and Total Hydrocarbons. Journal of the Air Pollution Control Association. *25*(9):925–932. 1975.

21. Snyder, A. D., F. N. Hodgson, M. A. Kemmer and J. R. McKendree. Utility of Solid Sorbents for Sampling Organic Emissions from Stationary Sources. U.S. Environmental Protection Agency. Research Triangle Park, NC Publication No. EPA 600/2–76–201. July 1976. 71 p.

22. Tentative Method for Continuous Analysis of Total Hydrocarbons in the Atmosphere. Intersociety Committee, American Public Health Association. Washington, DC 1972. p. 184–186.

23. Zwerg, G., CRC Handbook of Chromatography, Volumes I and II. Sherma, Joseph (ed.). CRC Press. Cleveland. 1972.

I. Name of company _____ Date _____
Address _____
_____
Contacts _____ Phone _____
_____ _____
Process to be sampled _____
_____
_____
Duct or vent to be sampled _____
_____

II. Process description _____
_____
_____
_____
_____
Raw material _____
_____
_____
Products _____
_____
_____
Operating cycle
Check: Batch _____ Continuous _____ Cyclic _____
Timing of batch or cycle _____
Best time to test _____

Figure 18-1. Preliminary survey data sheet.

III. Sampling site

A. Description

Site description _____

Duct shape and size _____

Material _____

Wall thickness _____inches

Upstream distance _____inches _____diameter

Downstream distance_____inches _____diameter

Size of port _____

Size of access area _____

Hazards _____Ambient temp. _____°F

B. Properties of gas stream

Temperature _____°C _____°F, Data source _____

Velocity _____, Data source _____

Static pressure ___inches H_2O, Data source _____

Moisture content _____%, Data source _____

Particulate content _____, Data source _____

Gaseous components

N_2	_____%	Hydrocarbons	_____ ppm
O_2	_____%	_____	_____
CO	_____%	_____	_____
CO_2	_____%	_____	_____
SO_2	_____%	_____	_____

Hydrocarbon components

_____	_____ ppm
_____	_____ ppm
_____	_____ ppm
_____	_____ ppm
_____	_____ ppm
_____	_____ ppm

Figure 18-1 (continued). Preliminary survey data sheet.

C. Sampling considerations

Location to set up GC _____

_____

Special hazards to be considered _____

_____

Power available at duct _____

Power available for GC _____

Plant safety requirements _____

_____

Vehicle traffic rules _____

_____

Plant entry requirements _____

_____

Security agreements _____

_____

Potential problems _____

_____

D. Site diagrams. (Attach additional sheets if required).

Figure 18-1 (continued). Preliminary survey data sheet.

Components to be analyzed	Expected concentration
_____	_____
_____	_____
_____	_____
_____	_____
_____	_____
_____	_____

Suggested chromatographic column _____

_____

Column flow rate ____ml/min Head pressure____ mm Hg

Column temperature:

Isothermal _____°C

Programmed from _____°C to ____°C at ____°C/min

Injection port/sample loop temperature _____°C

Detector temperature _____°C

Detector flow rates: Hydrogen _____ml/min.

head pressure____ mm Hg

Air/Oxygen _____ml/min,

head pressure____ mm Hg

Chart speed _____ inches/minute

Compound data:

Compound	Retention time	Attenuation
_____	_____	_____
_____	_____	_____
_____	_____	_____
_____	_____	_____
_____	_____	_____

Figure 18-2. Chromatographic conditions data sheet.

Preparation of Standards in Tedlar Bags
and Calibration Curve

	Standards		
Standards Preparation Data:	Mixture #1	Mixture #2	Mixture #3
Organic: _____			
Bag number or identification	_____	_____	_____
Dry gas meter calibration factor	_____	_____	_____
Final meter reading (liters)	_____	_____	_____
Initial meter reading (liters)	_____	_____	_____
Metered volume (liters)	_____	_____	_____
Average meter temperature (°K)	_____	_____	_____
Average meter pressure, gauge (mm Hg)	_____	_____	_____
Average atmospheric pressure (mm Hg)	_____	_____	_____
Average meter pressure, absolute (mm Hg)	_____	_____	_____
Syringe temperature (°K) (Section 6.2.2.1)	_____	_____	_____
Syringe pressure, absolute (mm Hg) (Section 6.2.2.1)	_____	_____	_____
Volume of gas in syringe (ml) (Section 6.2.2.1)	_____	_____	_____
Density of liquid organic (g/ml) (Section 6.2.2.2)	_____	_____	_____
Volume of liquid in syringe (μl) (Section 6.2.2.2)	_____	_____	_____
GC Operating Conditions:			
Sample loop volume (ml)	_____	_____	_____
Sample loop temperature (°C)	_____	_____	_____
Carrier gas flow rate (ml/min)	_____	_____	_____
Column temperature			
Initial (°C)	_____	_____	_____
Rate change (°C/min)	_____	_____	_____
Final (°C)	_____	_____	_____
Organic Peak Identification and Calculated Concentrations:			
Injection time (24-hr clock)	_____	_____	_____
Distance to peak (cm)	_____	_____	_____
Chart speed (cm/min)	_____	_____	_____
Organic retention time (min)	_____	_____	_____
Attenuation factor	_____	_____	_____
Peak height (mm)	_____	_____	_____
Peak area (mm^2)	_____	_____	_____
Peak area x attenuation factor (mm^2)	_____	_____	_____
Calculated concentration (ppm) (Equation 18-3 or 18-4)	_____	_____	_____

Plot peak area x attenuation factor against calculated concentration to obtain calibration curve.

Figure 18-3. Standards prepared in Tedlar bags and calibration curve.

Flowmeter Calibration

Flowmeter number or identification _____

Flowmeter type _____

Calibration device (x): Bubble meter____ Spirometer____ Wet test meter____

Readings at laboratory conditions:

Laboratory temperature (T_{lab}) _____ °K

Laboratory barometric pressure (P_{lab}) _____ mm Hg

Flow data:

Flowmeter			Calibration device		
reading (as marked)	temp. (°K)	pressure (absolute)	Time (min)	gas volume[a]	flow rate[b]

a = Volume of gas measured by calibration device, corrected to standard conditions (liters).

b = Calibration device gas volume/time.

Plot flowmeter reading against flow rate (standard conditions), and draw a smooth curve. If the flowmeter being calibrated is a rotameter or other flow device that is viscosity dependent, it may be necessary to generate a "family" of calibration curves that cover the operating pressure and temperature ranges of the flowmeter.

While the following technique should be verified before application, it may be possible to calculate flow rate readings for rotameters at standard conditions Q_{std} as follows:

$$Q_{std} = Q_{lab}\left(\frac{760 \times T_{lab}}{P_{lab} \times 293}\right)^{1/2}$$

Flow rate (laboratory conditions)	Flow rate (standard conditions)

Figure 18-4. Flowmeter calibration.

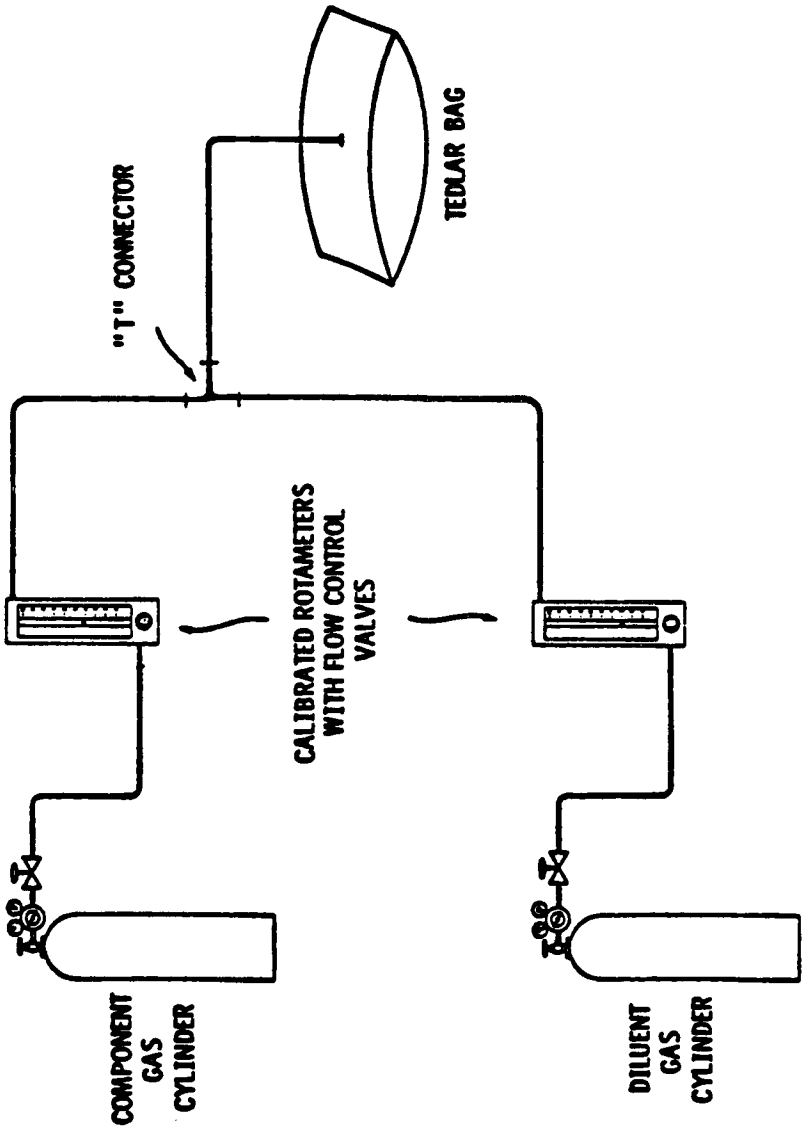

Figure 18-5. Single-stage calibration gas dilution system.

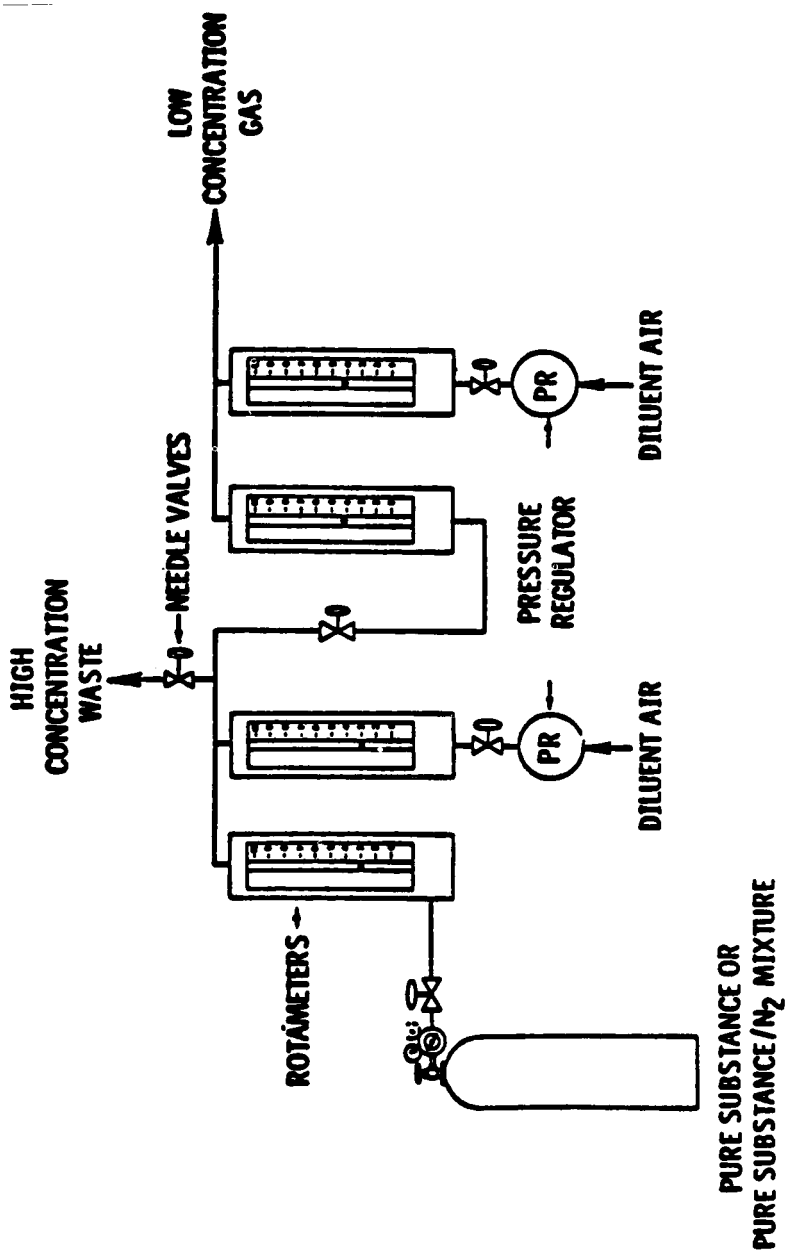

Figure 18-6. Two-stage dilution apparatus.

Preparation of Standards by Dilution of Cylinder Standard

Cylinder standard: Organic _____ Certified concentration _____ ppm

Standards Preparation Data: Date _____

Stage 1	Mixture 1	Mixture 2	Mixture 3
Standard gas flowmeter reading	_____	_____	_____
Diluent gas flowmeter reading	_____	_____	_____
Laboratory temperature (°K)	_____	_____	_____
Barometric pressure (mm Hg)	_____	_____	_____
Flowmeter gage pressure (mm Hg)	_____	_____	_____
Flow rate cylinder gas at standard conditions (ml/min)	_____	_____	_____
Flow rate diluent gas at standard conditions (ml/min)	_____	_____	_____
Calculated concentration (ppm)	_____	_____	_____
Stage 2 (if used)			
Standard gas flowmeter reading	_____	_____	_____
Diluent gas flowmeter reading	_____	_____	_____
Flow rate stage 1 gas at standard conditions (ml/min)	_____	_____	_____
Flow rate diluent gas at standard conditions (ml/min)	_____	_____	_____
Calculated concentration (ppm)	_____	_____	_____
GC Operating Conditions:			
Sample loop volume (ml)	_____	_____	_____
Sample loop temperature (°C)	_____	_____	_____
Carrier gas flow rate (ml/min)	_____	_____	_____
Column temperature:			
Initial (°C)	_____	_____	_____
Program rate (°C/min)	_____	_____	_____
Final (°C)	_____	_____	_____
Organic Peak Identification and Calculated Concentrations:			
Injection time (24-hr clock)	_____	_____	_____
Distance to peak (cm)	_____	_____	_____
Chart speed (cm/min)	_____	_____	_____
Retention time (min)	_____	_____	_____
Attenuation factor	_____	_____	_____
Peak area (mm^2)	_____	_____	_____
Peak area x attenuation factor	_____	_____	_____

Plot peak area x attenuation factor against calculated concentration to obtain calibration curve.

Figure 18-7. Standards prepared by dilution of cylinder standard.

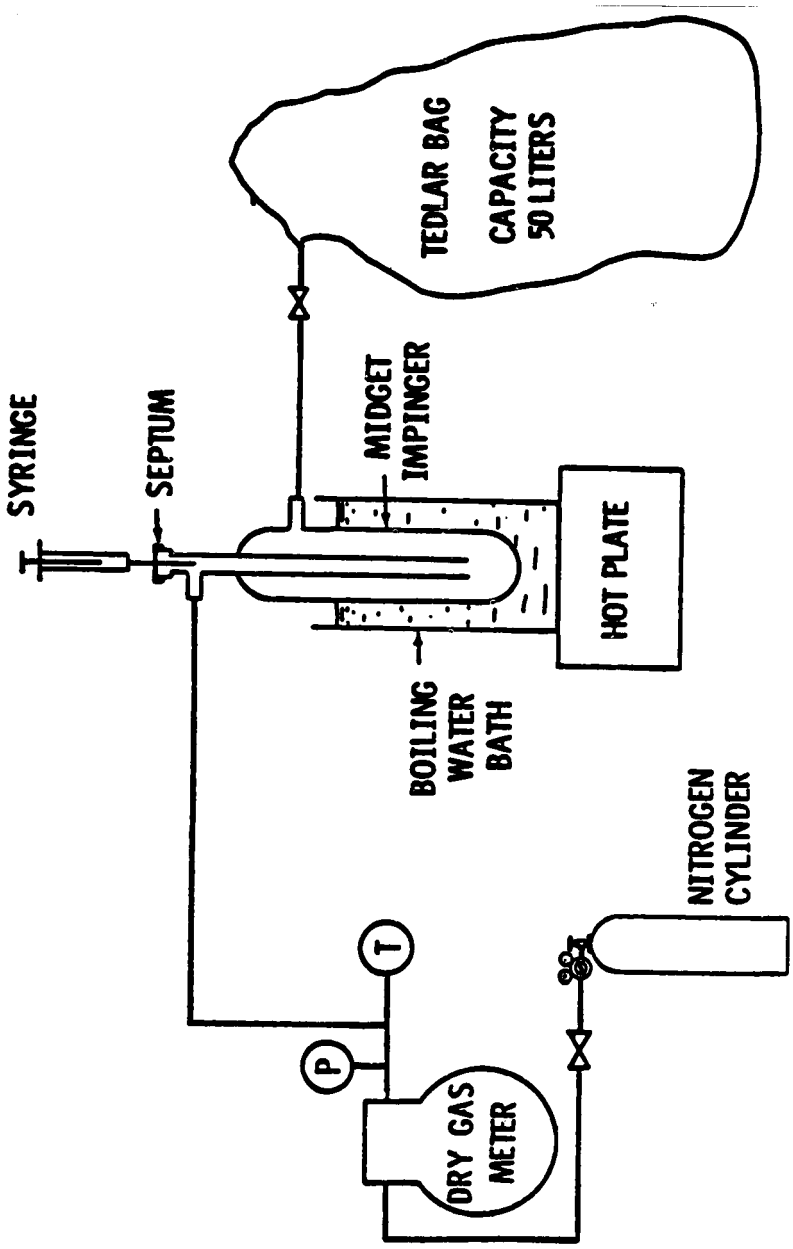

Figure 18-8. Apparatus for preparation of liquid materials.

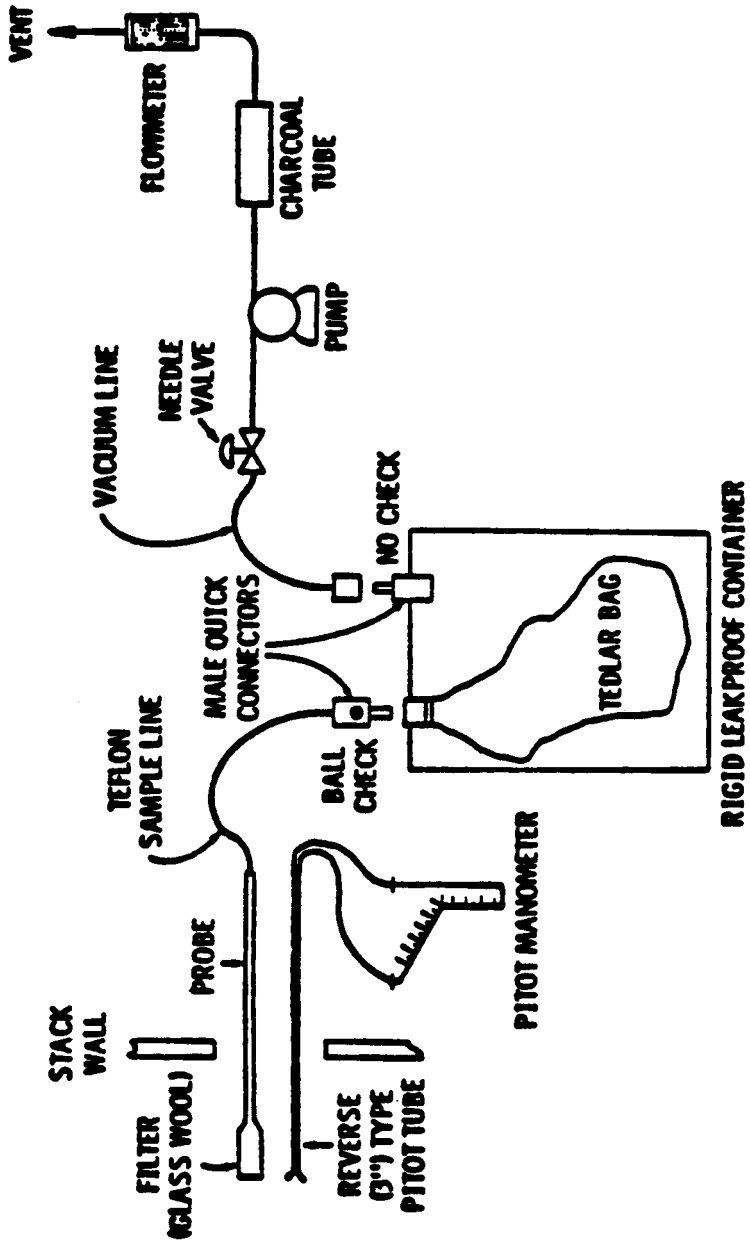

Figure 18-9. Integrated bag sampling train.

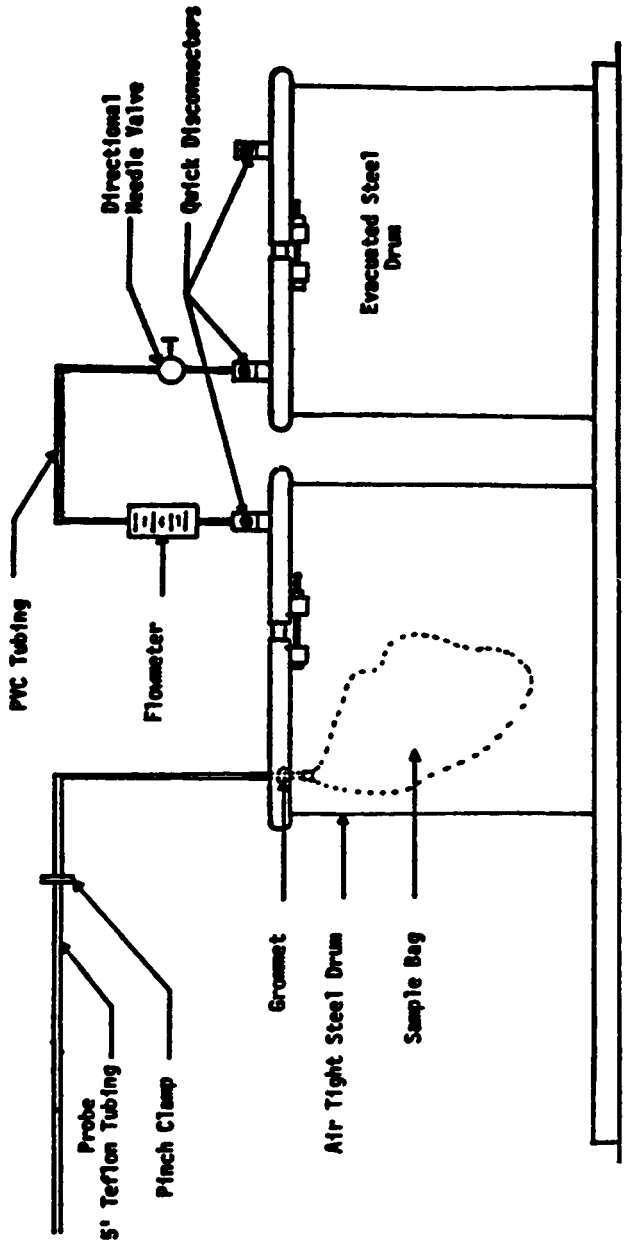

Figure 18-9a. Explosion risk gas sampling method.

Plant_____ Date_____

Site_____

	Sample 1	Sample 2	Sample 3
Source temperature (°C)	_____	_____	_____
Barometric pressure (mm Hg)	_____	_____	_____
Ambient temperature (°C)	_____	_____	_____
Sample flow rate (appr.)	_____	_____	_____
Bag number	_____	_____	_____
Start time	_____	_____	_____
Finish time	_____	_____	_____

Figure 18-10. Field sample data sheet - Tedlar bag collection method.

Plant_____ Date_____

Location_____

1. General information

Source temperature (°C)	_____
Probe temperature (°C)	_____
Ambient temperature (°C)	_____
Atmospheric pressure (mm)	_____
Source pressure (°Hg)	_____
Absolute source pressure (mm)	_____
Sampling rate (liter/min)	_____
Sample loop volume (ml)	_____
Sample loop temperature (°C)	_____
Columnar temperature:	
Initial (°C)/time (min)	_____
Program rate (°C/min)	_____
Final (°C)/ time (min)	_____
Carrier gas flow rate (ml/min)	_____
Detector temperature (°C)	_____
Injection time (24-hour basis)	_____
Chart speed (mm/min)	_____
Dilution gas flow rate (ml/min)	_____
Dilution Gas used (symbol)	_____
Dilution ratio	_____

Figure 18-11. Field analysis data sheets.

2. Field Analysis Data - Calibration Gas

Run No._____ Time_____

Components	Area	Attenuation	A x A Factor	Conc. (ppm)

Run No._____ Time_____

Components	Area	Attenuation	A x A Factor	Conc. (ppm)

Run No._____ Time_____

Components	Area	Attenuation	A x A Factor	Conc. (ppm)

Figure 18-11 (continued). Field analysis data sheets.

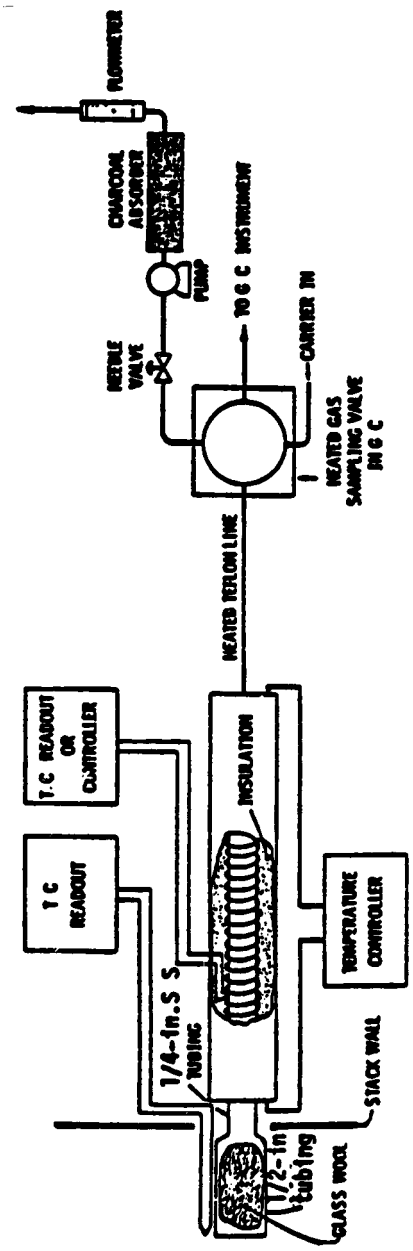

Figure 18-12. Direct interface sampling system.

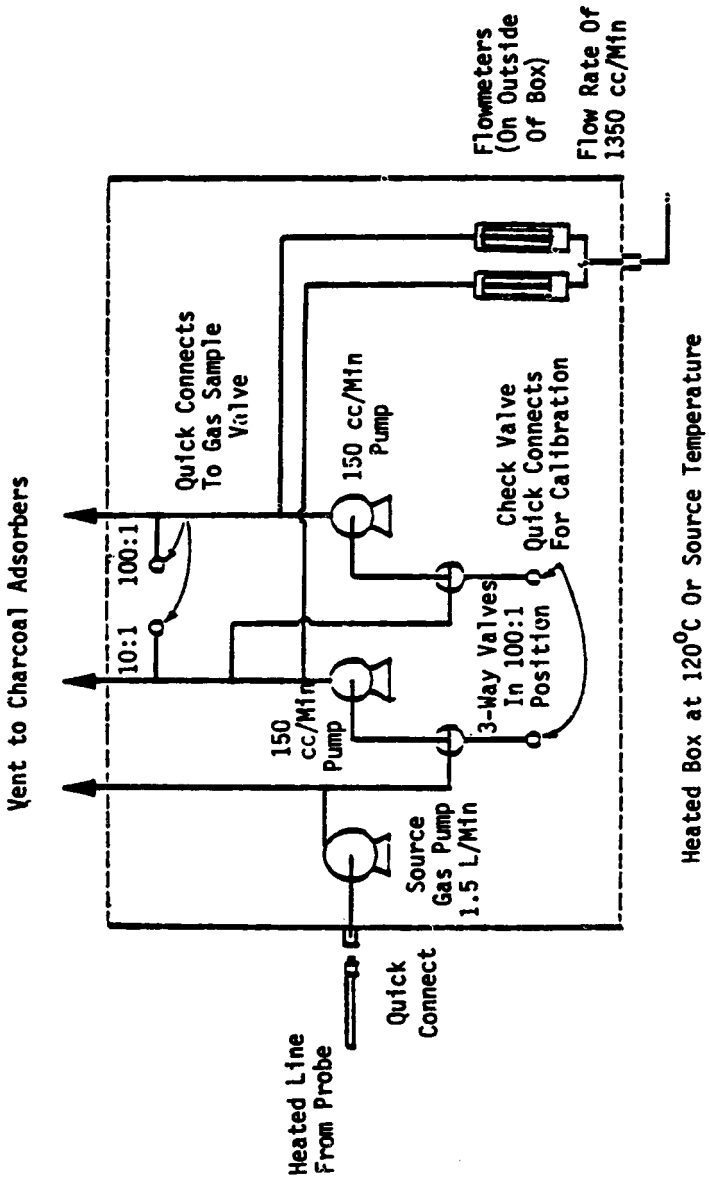

Figure 18-13. Schematic diagram of the heated box required for dilution of sample gas.

GASEOUS ORGANIC SAMPLING AND ANALYSIS CHECK LIST

(Respond with initials or number as appropriate)

	Date
1. Presurvey data:	
A. Grab sample collected	
B. Grab sample analyzed for composition	
Method GC	
GC/MS	
Other	
C. GC–FID analysis performed	.....
2. Laboratory calibration data:	
A. Calibration curves prepared	.....
Number of components	
Number of concentrations/component (3 required)	
B. Audit samples (optional):	
Analysis completed ...	.....
Verified for concentration	.....
OK obtained for field work	.....
3. Sampling procedures:	
A. Method:	
Bag sample	
Direct interface	
Dilution interface	
B. Number of samples collected	.....
4. Field analysis:	
A. Total hydrocarbon analysis performed	.....
B. Calibration curve prepared	.....
Number of components	
Number of concentrations per component (3 required)	

Figure 18–14. Sampling and analysis check.

GASEOUS ORGANIC SAMPLING AND ANALYSIS DATA

Plant
Date
Location

	Source sample 1	Source sample 2	Source sample 3
1. General information:			
Source temperature (°C)	.....	.....	.....
Probe temperature (°C)	.....	.....	.....
Ambient temperature (°C)	.....	.....	.....
Atmospheric pressure (mm Hg) ...	.....	.....	.....
Source pressure (mm Hg)	.....	.....	.....
Sampling rate (ml/min)	.....	.....	.....
Sample loop volume (ml)	.....	.....	.....
Sample loop temperature (°C) ...	.....	.....	.....
Sample collection time (24-hr basis)	.....	.....	.....
Column temperature:			
Initial (°C)	.....	.....	.....
Program rate (°C/min)	.....	.....	.....
Final (°C)	.....	.....	.....
Carrier gas flow rate (ml/min)	.....	.....	.....
Detector temperature (°C)	.....	.....	.....
Chart speed (cm/min)	.....	.....	.....
Dilution gas flow rate (ml/min)	.....	.....	.....
Diluent gas used (symbol)	.....	.....	.....
Dilution ratio	.....	.....	.....
Performed by (signature):	.....		
Date:	.....		

Figure 18–14. Sampling and analysis sheet.

METHOD 19—DETERMINATION OF SULFUR DIOXIDE REMOVAL EFFICIENCY AND PARTICULATE MATTER, SULFUR DIOXIDE, AND NITROGEN OXIDES EMISSION RATES

1. Applicability and Principle

1.1 Applicability. This method is applicable for (a) determining particulate matter (PM), sulfur dioxide (SO_2), and nitrogen oxides (NO_x) emission rates; (b) determining sulfur removal efficiencies of fuel pretreatment and SO_2 control devices; (c) determining overall reduction of potential SO_2 emissions from steam generating units or other sources as specified in applicable regulations; and (d) determining SO_2 rates based on fuel sampling and analysis procedures.

1.2 Principle.

1.2.1 Pollutant emission rates are determined from concentrations of PM, SO_2, or NO_x, and oxygen (O_2) or carbon dioxide (CO_2) along with F factors (ratios of combustion gas volumes to heat inputs).

1.2.2 An overall SO_2 emission reduction efficiency is computed from the efficiency of fuel pretreatment systems (optional) and the efficiency of SO_2 control devices.

1.2.3 The sulfur removal efficiency of a fuel pretreatment system is determined by fuel sampling and analysis of the sulfur and heat contents of the fuel before and after the pretreatment system.

1.2.4 The SO_2 removal efficiency of a control device is determined by measuring the SO_2 rates before and after the control device.

1.2.5 The inlet rates to SO_2 control systems and when SO_2 control systems are not

used, SO_2 emission rates to the atmosphere may be determined by fuel sampling and analysis (optional).

2. Emission Rates of Particulate Matter, Sulfur Dioxide, and Nitrogen Oxides

Select from the following sections the applicable procedure to compute the PM, SO_2, or NO_x emission rate (E) in ng/J (lb/million Btu). The pollutant concentration must be in ng/scm (lb/scf) and the F factor must be in scm/J (scf/million Btu). If the pollutant concentration (C) is not in the appropriate units, use the following table to make the proper conversion:

CONVERSION FACTORS FOR CONCENTRATION

From	To	Multiply by
g/scm	ng/scm	10^9
mg/scm	ng/scm	10^6
lb/scf	ng/scm	1.602×10^{13}
ppm SO_2	ng/scm	2.66×10^6
ppm NO_x	ng/scm	1.912×10^6
ppm SO_2	lb/scf	1.660×10^{-7}
ppm NO_x	lb/scf	1.194×10^{-7}

An F factor is the ratio of the gas volume of the products of combustion to the heat content of the fuel. The dry F factor (F_d) includes all components of combustion less water, the wet F factor (F_w) includes all components of combustion, and the carbon F factor (F_c) includes only carbon dioxide.

NOTE: Since F_w factors include water resulting only from the combustion of hydrogen in the fuel, the procedures using F_w factors are not applicable for computing E from steam generating units with wet scrubbers or with other processes that add water (e.g., steam injection)

2.1 Oxygen-Based F Factor, Dry Basis. When measurements are on a dry basis for both O_2 ($\%O_{2d}$) and pollutant (C_d) concentrations, use the following equation:

$$E=C_d\ F_d\ [20.9/(20.9-\%O_{2d})]$$

Eq. 19–1

2.2 Oxygen-Based F Factor, Wet Basis. When measurements are on a wet basis for both O_2 ($\%O_{2w}$) and pollutant (C_w) concentrations, use either of the following:

2.2.1 If the moisture fraction of ambient air (B_{wa}) is measured:

$$E=[C_w\ F_w 20.9]/[20.9(1-B_{wa})-\%O_{2w}]$$

Eq. 19–2

Instead of actual measurement, B_{wa} may be estimated according to the procedure below.

(NOTE: The estimates are selected to ensure that negative errors will not be larger than −1.5 percent. However, positive errors, or over-estimation of emissions, of as much as 5 percent may be introduced depending upon the geographic location of the facility and the associated range of ambient moisture):

2.2.1.1 B_{wa}=0.027. This value may be used at any location at all times.

2.2.1.2 B_{wa}=Highest monthly average of B_{wa} that occurred within the previous calendar year at the nearest Weather Service Station. This value shall be determined annually and may be used as an estimate for the entire current calendar year.

2.2.1.3 B_{wa}=Highest daily average of B_{wa} that occurred within a calendar month at the nearest Weather Service Station, calculated from the data from the past 3 years. This value shall be computed for each month and may be used as an estimate for the current respective calendar month.

2.2.2 If the moisture fraction (B_{ws}) of the effluent gas is measured:

$$E=C_w\ F_d\ \{20.9/[20.9(1-B_{ws})-\%O_{2w}]\}$$

Eq. 19–3

2.3 Oxygen-Based F Factor, Dry/Wet Basis.

2.3.1 When the pollutant concentration is measured on a wet basis (C_w) and O_2 concentration is measured on a dry basis ($\%O_{2d}$), use the following equation:

$$E=[(C_w\ F_d)/(1-B_{ws})]/[20.9/(20.9-\%O_{2d})]$$

Eq. 19–4

2.3.2 When the pollutant concentration is measured on a dry basis (C_d) and the O_2 concentration is measured on a wet basis ($\%O_{2w}$), use the following equation:

$$E=[C_d\ F_d 20.9]/[20.9-O_{2w}/(1-B_{ws})]$$

Eq. 19–5

2.4 Carbon Dioxide-Based F Factor, Dry Basis. When measurements are on a dry basis for both CO_2 ($\%CO_{2d}$) and pollutant (C_d) concentrations, use the following equation:

$$E=C_d\ F_c(100/\%CO_{2d})$$

Eq. 19–6

2.5 Carbon Dioxide-Based F Factor, Wet Basis. When measurements are on a wet basis for both CO_2 ($\%CO_{2w}$) and pollutant (C_w) concentrations, use the following equation:

$$E=C_w\ F_c\ (100/\%CO_{2w})$$

Eq. 19–7

2.6 Carbon Dioxide-Based F Factor, Dry/Wet Basis.

2.6.1 When the pollutant concentration is measured on a wet basis (C_w) and CO_2 concentration is measured on a dry basis ($\%CO_{2d}$), use the following equation:

$$E=[C_w\ F_c/(1-B_{ws})]\ (100/\%CO_{2d})$$

Eq. 19–8

2.6.2 When the pollutant concentration is measured on a dry basis (C_d) and CO_2 concentration is measured on a wet basis ($\%CO_{2w}$), use the following equation:

$$E=C_d(1-B_{ws})F_c(100/\%CO_{2w})$$

Eq. 19–9

2.7 Direct-Fired Reheat Fuel Burning. The effect of direct-fired reheat fuel burning (for the purpose of raising the temperature of the exhaust effluent from wet scrubbers to above the moisture dew-point) on emission rates will be less than ±1.0 percent and, therefore, may be ignored.

2.8 Combined Cycle-Gas Turbine Systems. For gas turbine-steam generator combined cycle systems, determine the emissions from the steam generating unit or the percent reduction in potential SO_2 emissions as follows:

2.8.1 Compute the emission rate from the steam generating unit using the following equation:

$$E_{bo}=E_{co}+(H_g/H_b)(E_{co}-E_g)$$

Eq. 19–10

where:

E_{bo}=pollutant emission rate from the steam generating unit, ng/J (lb/million Btu).

E_{co}=pollutant emission rate in combined effluent, ng/J (lb/million Btu).

E_g=pollutant rate from gas turbine, ng/J (lb/million Btu).

H_b=heat input rate to the steam generating unit from fuels fired in the steam generating unit, J/hr (million Btu/hr).

H_g=heat input rate to gas turbine from all fuels fired in the gas turbine, J/hr (million Btu/hr).

2.8.1.1 Use the test methods and procedures section of Subpart GG to obtain E_{co} and E_g. Do not use F_w factors for determining E_g or E_{co}. If an SO_2 control device is used, measure E_{co} after the control device.

2.8.1.2 Suitable methods shall be used to determine the heat input rates to the steam generating units (H_b) and the gas turbine (H_g).

2.8.2 If a control device is used, compute the percent of potential SO_2 emissions (% P_s) using the following equations:

$$E_{bi}=E_{ci}-(H_g/H_b)(E_{ci}-E_g)$$

Eq. 19–11

$$\%\ P_s=100\ (1-E_{bo}/E_{bi})$$

Eq. 19–12

where:

E_{bi}=pollutant rate from the steam generating unit, ng/J (lb/million Btu)

E_{ci}=pollutant rate in combined effluent, ng/J (lb/million Btu).

Use the test methods and procedures section of Subpart GG to obtain E_{ci} and E_g. Do not use F_w factors for determining E_g or E_{ci}.

3. F Factors

Use an average F factor according to Section 3.1 or determine an applicable F factor according to Section 3.2. If combined fuels are fired, prorate the applicable F factors using the procedure in Section 3.3.

3.1 Average F Factors. Average F factors (F_d, F_w, or F_c) from Table 19–1 may be used.

TABLE 19–1—F FACTORS FOR VARIOUS FUELS [1]

Fuel type	F_d		F_w		F_c	
	dscm/J	dscf/10^6 Btu	wscm/J	wscf/10^6 Btu	scm/J	scf/10^6 Btu
Coal:						
Anthracite [2]	2.71×10^{-7}	10,100	2.83×10^{-7}	10,540	0.530×10^{-7}	1,970
Bituminous [2]	2.63×10^{-7}	9,780	2.86×10^{-7}	10,640	0.484×10^{-7}	1,800
Lignite	2.65×10^{-7}	9,860	3.21×10^{-7}	11,950	0.513×10^{-7}	1,910
Oil [3]	2.47×10^{-7}	9,190	2.77×10^{-7}	10,320	0.383×10^{-7}	1,420
Gas:						
Natural	2.43×10^{-7}	8,710	2.85×10^{-7}	10,610	0.287×10^{-7}	1,040
Propane	2.34×10^{-7}	8,710	2.74×10^{-7}	10,200	0.321×10^{-7}	1,190
Butane	2.34×10^{-7}	8,710	2.79×10^{-7}	10,390	0.337×10^{-7}	1,250
Wood	2.48×10^{-7}	9,240	.....	.....	0.492×10^{-7}	1,830
Wood Bark	2.58×10^{-7}	9,600	.....	.....	0.516×10^{-7}	1,920
Municipal	2.57×10^{-7}	9,570	.....	.....	0.488×10^{-7}	1,820
Solid Waste	.....					

[1] Determined at standard conditions: 20 °C (68 °F) and 760 mm Hg (29.92 in. Hg).
[2] As classified according to ASTM D388–77.
[3] Crude, residual, or distillate.

3.2 Determined F Factors. If the fuel burned is not listed in Table 19–1 or if the owner or operator chooses to determine an F factor rather than use the values in Table 19–1, use the procedure below:

3.2.1 Equations. Use the equations below, as appropriate, to compute the F factors:

$$F_d = K[(K_{hd}\%H) + (K_c\%C) + (K_s\%S) + (K_n\%N) - (K_o\%0)]/GCV_w$$

Eq. 19–13

$$F_w = K[(K_{hw}\%H) + (K_c\%C) + (K_s\%S) + (K_n\%N) - (K_o\%0) + (K_w\%H_2O)]/GCV_w$$

Eq. 19–14

$$F_c=K(K_{cc}\%C)/GCV$$

Eq. 19–15

(NOTE.— Omit the $\%H_2O$ term in the equations for F_w if %H and %0 include the unavailable hydrogen and oxygen in the form of H_2O.)

where:

F_d, F_w, F_c=volumes of combustion components per unit of heat content, scm/J (scf/million Btu).

%H, %C, %S, %N, %0, and $\%H_2O$=concentrations of hydrogen, carbon, sulfur, nitrogen, oxygen, and water from an ultimate analysis of fuel, weight percent.

GCV=gross calorific value of the fuel consistent with the ultimate analysis, kJ/kg (Btu/lb).

K=conversion factor, 10^{-5} (kJ/J)/(%) [10^6 Btu/million Btu].

K_{hd}=22.7 (scm/kg))[(3.64 (scf/lb)/(%)].

K_c=9.57 (scm/kg)[(1.53 (scf/lb)/(%)].

K_s=3.54 (scm/kg) [(0.57 (scf/lb)/(%)].

K_n=0.86 (scm/kg [0.14 (scf/lb)/(%)].

K_o=2.85 (scm/kg) [0.46 (scf/lb)/(%)].

K_{hw}=34.74 (scm/kg) [(5.57 (scf/lb)/(%)].

K_w=1.30 (scm/kg) [(0.21 (scf/lb)/(%)].

K_{cc}=2.0 (scm/kg) [(0.321 (scf/lb)/(%)].

3.2.2 Use applicable sampling procedures in Section 5.2.1 or 5.2.2 to obtain samples for analyses.

3.2.3 Use ASTM D3176–74 (incorporated by reference—see §60.17) for ultimate analysis of the fuel.

3.2.4 Use applicable methods in Section 5.2.1 or 5.2.2 to determine the heat content of solid or liquid fuels. For gaseous fuels, use ASTM D1826–77 (IBR—see §60.17) to determine the heat content.

3.3 F Factors for Combination of Fuels. If combinations of fuels are burned, use the following equations, as applicable unless otherwise specified in applicable subpart:

$$F_d = \sum_{k=1}^{n} X_k F_{dk}$$

Eq. 19-16

$$F_w = \sum_{k=1}^{n} X_k F_{wk}$$

Eq. 19-17

$$F_c = \sum_{k=1}^{n} X_k F_{ck}$$

Eq. 19-18

where:

X_k=fraction of total heat input from each type of fuel k.

n=number of fuels being burned in combination.

4. Determination of Average Pollutant Rates

4.1 Average Pollutant Rates from Hourly Values. When hourly average pollutant rates (E_h), inlet or outlet, are obtained (e.g., CEMS values), compute the average pollutant rate (E_a) for the performance test period (e.g., 30 days) specified in the applicable regulation using the following equation:

$$E_a = (1/H) \sum_{j=1}^{n} E_{hj}$$

Eq. 19-19

where:

E_a=average pollutant rate for the specified performance test period, ng/J (lb/million Btu).

E_h=hourly average pollutant, ng/J (lb/million Btu).

H=total number of operating hours for which pollutant rates are determined in the performance test period.

4.2 Average Pollutant Rates from Other than Hourly Averages. When pollutant rates

are determined from measured values representing longer than 1-hour periods (e.g., daily fuel sampling and analyses or Method 6B values), or when pollutant rates are determined from combinations of 1-hour and longer than 1-hour periods (e.g., CEMS and Method 6B values), compute the average pollutant rate (E_a) for the performance test period (e.g., 30 days) specified in the applicable regulation using the following equation:

$$E_a = \left[\sum_{j=1}^{D} (n_d E_d)_j\right] / \sum_{j=1}^{D} n_{dj}$$

Eq. 19-20

where:

E_d=average pollutant rate for each sampling period (e.g., 24-hr Method 6B sample or 24-hr fuel sample) or for each fuel lot (e.g., amount of fuel bunkered), ng/J (lb/million Btu).

n_d=number of operating hours of the affected facility within the performance test period for each E_d determined.

D=number of sampling periods during the performance test period.

4.3 Daily Geometric Average Pollutant Rates from Hourly Values. The geometric average pollutant rate (E_{ga}) is computed using the following equation:

$$E_{ga} = EXP\left[\left(\frac{1}{n}\right)\sum_{j=1}^{n}\left[\ln(E_{hj})\right]\right] \qquad \text{Eq. 19-20a}$$

where:

E_{ga} = daily geometric average pollutant rate, ng/J (lbs/million Btu) or ppm corrected to 7 percent O_2.

E_{hj} = hourly arithmetic average pollutant rate for hour ''j,'' ng/J (lb/million Btu) or ppm corrected to 7 percent O_2.

n = total number of hourly averages for which pollutant rates are available within the 24 hr midnight to midnight daily period.

ln = natural log of indicated value.

EXP = the natural logarithmic base (2.718) raised to the value enclosed by brackets.

5. Determination of Overall Reduction in Potential Sulfur Dioxide Emission

5.1 Overall Percent Reduction. Compute the overall percent SO_2 reduction ($\%R_o$) using the following equation:

$$\%R_o = 100\ [1.0 - (1.0 - \%R_f/100)(1.0 - \%R_g/100)] \qquad \text{Eq. 19–21}$$

where:

$\%R_f$=SO_2 removal efficiency from fuel pretreatment, percent.

$\%R_g$=SO_2 removal efficiency of the control device, percent.

5.2 Pretreatment Removal Efficiency (Optional). Compute the SO_2 removal efficiency from fuel pretreatment ($\%R_f$) for the averaging period (e.g., 90 days) as specified in the applicable regulation using the following equation:

$$\%R_f = 100\ (1.0 - [\sum_{j=1}^{n} (\%S_{pj}/GCV_{pj})\ L_{pj}]/[\sum_{j=1}^{n} (\%S_{rj}/GCV_{rj})\ L_{rj}]) \qquad \text{Eq. 19-22}$$

where:

$\%S_p$, $\%S_r$=sulfur content of the product and raw fuel lots, respectively, dry basis weight percent.

GCV_p, GCV_r=gross calorific value for the product and raw fuel lots, respectively, dry basis, kg/kg (Btu/lb).

L_p, L_r=weight of the product and raw fuel lots, respectively, metric ton (ton).

n=number of fuel lots during the averaging period.

NOTE: In calculating $\%R_f$, include %S and GCV values for all fuel lots that are not pretreated and are used during the averaging period.

5.2.1 Solid Fossil (Including Waste) Fuel—Sampling and Analysis.

NOTE: For the purposes of this method, raw fuel (coal or oil) is the fuel delivered to the desulfurization (pretreatment) facility. For oil, the input oil to the oil desulfurization process (e.g., hydrotreatment) is considered to be the raw fuel.

5.2.1.1 Sample Increment Collection. Use ASTM D2234–76 (IBR—see §60.17), Type I, Conditions A, B, or C, and systematic spacing. As used in this method, systematic spacing is intended to include evenly spaced increments in time or increments based on equal weights of coal passing the collection area.

As a minimum, determine the number and weight of increments required per gross sample representing each coal lot according to Table 2 or Paragraph 7.1.5.2 of ASTM D2234–76. Collect one gross sample for each lot of raw coal and one gross sample for each lot of product coal.

5.2.1.2 ASTM Lot Size. For the purpose of Section 5.2 (fuel pretreatment), the lot size of product coal is the weight of product coal from one type of raw coal. The lot size of raw coal is the weight of raw coal used to produce one lot of product coal. Typically, the lot size is the weight of coal processed in a 1-day (24-hour) period. If more than one type of coal is treated and produced in 1 day, then gross samples must be collected and analyzed for each type of coal. A coal lot size equaling the 90-day quarterly fuel quantity for a steam generating unit may be used if representative sampling can be conducted for each raw coal and product coal.

NOTE: Alternative definitions of lot sizes may be used, subject to prior approval of the Administrator.

5.2.1.3 Gross Sample Analysis. Use ASTM D2013–72 to prepare the sample, ASTM D3177–75 or ASTM D4239–85 to determine sulfur content (%S), ASTM D3173–73 to determine moisture content, and ASTM D2015–77 or ASTM D3286–85 to determine gross calorific value (GCV) (all methods cited IBR—see §60.17) on a dry basis for each gross sample.

5.2.2 Liquid Fossil Fuel—Sampling and Analysis. See NOTE under Section 5.2.1.

5.2.2.1 Sample Collection. Follow the procedures for continuous sampling in ASTM D270–65 (Reapproved 1975) (IBR—see §60.17) for each gross sample from each fuel lot.

5.2.2.2 Lot Size. For the purpose of Section 5.2 (fuel pretreatment), the lot size of a product oil is the weight of product oil from one pretreatment facility and intended as one shipment (ship load, barge load, etc.). The lot size of raw oil is the weight of each crude liquid fuel type used to produce a lot of product oil.

NOTE: Alternative definitions of lot sizes may be used, subject to prior approval of the Administrator.

5.2.2.3 Sample Analysis. Use ASTM D129–64 (Reapproved 1978), ASTM D1552–83, or ASTM D4057–81 to determine the sulfur content (%S) and ASTM D240–76 (all methods cited IBR—see §60.17) to determine the GCV of each gross sample. These values may be assumed to be on a dry basis. The owner or operator of an affected facility may elect to determine the GCV by sampling the oil combusted on the first steam generating unit operating day of each calendar month and then using the lowest GCV value of the three GCV values per quarter for the GCV of all oil combusted in that calendar quarter.

5.2.3 Use appropriate procedures, subject to the approval of the Administrator, to determine the fraction of total mass input derived from each type of fuel.

5.3 Control Device Removal Efficiency. Compute the percent removal efficiency ($\%R_g$ of the control device using the following equation:

$$\%R_g=100[1.0-E_{ao}/E_{ai}] \qquad \text{Eq. 19–23}$$

where:

E_{ao}, E_{ai}=average pollutant rate of the control device, outlet and inlet, respectively, for the performance test period, ng/J (lb/million Btu).

5.3.1 Use continuous emission monitoring systems or test methods, as appropriate, to determine the outlet SO_2 rates and, if appropriate, the inlet SO_2 rates. The rates may be determined as hourly (E_h) or other sampling period averages (E_d). Then, compute the average pollutant rates for the performance test period (E_{ao} and E_{ai}) using the procedures in Section 4.

5.3.2 As an alternative, as-fired fuel sampling and analysis may be used to determine inlet SO_2 rates as follows:

5.3.2.1 Compute the average inlet SO_2 rate (E_{di}) for each sampling period using the following equation:

$$E_{di}=K\ (\%S/GCV) \qquad \text{Eq. 19–24}$$

where:

E_{di}=average inlet SO_2 rate for each sampling period d, ng/J (lb/million Btu)

% S=sulfur content of as-fired fuel lot, dry basis, weight percent.

GCV=gross calorific value of the fuel lot consistent with the sulfur analysis, kJ/kg (Btu/lb).

$K=2\times10^7[(kg)(ng)/(\%)(J)]\{2\times10^4(lb)(Btu/(\%))(million\ Btu)\}$

After calculating E_{di} use the procedures in Section 4.2 to determine the average inlet SO_2 rate for the performance test period (E_{ai}).

5.3.2.2 Collect the fuel samples from a location in the fuel handling system that provides a sample representative of the fuel bunkered or consumed during a steam generating unit operating day.

For the purpose of as-fired fuel sampling under Section 5.3.2 or Section 6, the lot size for coal is the weight of coal bunkered or consumed during each steam generating unit operating day. The lot size for oil is the weight of oil supplied to the ''day'' tank or consumed during each steam generating unit operating day.

For reporting and calculation purposes, the gross sample shall be identified with the calendar day on which sampling began. For steam generating unit operating days when a coal-fired steam generating unit is operated without coal being added to the bunkers, the coal analysis from the previous ''as bunkered'' coal sample shall be used until coal is bunkered again. For steam generating unit operating days when an oil-fired steam generating unit is operated without oil being added to the oil ''day'' tank, the oil analysis from the previous day shall be used until the ''day'' tank is filled again.

Alternative definitions of fuel lot size may be used, subject to prior approval of the Administrator.

5.3.2.3 Use ASTM procedures specified in Section 5.2.1 or 5.2.2 to determine the sulfur contents (%S) and gross calorific values (GCV).

5.4 Daily Geometric Average Percent Reduction from Hourly Values. The geometric average percent reduction ($\%R_{ga}$) is computed using the following equation:

$$\%R_{ga} = 100\left[1 - EXP\left[\left(\frac{1}{n}\right)\sum_{j=1}^{n} 1n\left(E_{jo} / E_{ji}\right)\right]\right] \qquad \text{Eq. 19-24a}$$

where:

$\%R_{ga}$ = daily geometric average percent reduction.

E_{jo}, E_{ji} = matched pair hourly arithmetic average pollutant rate, outlet and inlet, respectively, ng/J (lb/million Btu) or ppm corrected to 7 percent O_2.

n = total number of hourly averages for which paired inlet and outlet pollutant rates are available within the 24-hr midnight to midnight daily period.

ln=natural log of indicated value.

EXP = the natural logarithmic base (2.718) raised to the value enclosed by brackets.

NOTE: The calculation includes only paired data sets (hourly average) for the inlet and outlet pollutant measurements.

6. Sulfur Retention Credit for Compliance Fuel

If fuel sampling and analysis procedures in Section 5.2.1 are being used to determine average SO_2 emission rates (E_{as}) to the atmosphere from a coal-fired steam generating unit when there is no SO_2 control device, the following equation may be used to adjust the emission rate for sulfur retention credits (no credits are allowed for oil-fired systems) (E_{di}) for each sampling period using the following equation:

$$E_{di}=0.97\ K\ (\%S/GCV) \qquad \text{Eq. 19–25}$$

where:

E_{di}=average inlet SO_2 rate for each sampling period d, ng/J (lb/million Btu)

%S=sulfur content of as-fired fuel lot, dry basis, weight percent.

GCV=gross calorific value of the fuel lot consistent with the sulfur analysis, kJ/kg (Btu/lb).

$K=2\times10^7[(kg)(ng)/(\%)(J)]$ $\{2\times10^4(lb)(Btu/(\%))(million\ Btu)\}$

After calculating E_{di} use the procedures in Section 4–2 to determine the average SO_2 emission rate to the atmosphere for the performance test period (E_{ao}).

7. Determination of Compliance When Minimum Data Requirement Is Not Met

7.1 Adjusted Emission Rates and Control Device Removal Efficiency. When the minimum data requirement is not met, the Administrator may use the following adjusted emission rates or control device removal efficiencies to determine compliance with the applicable standards.

7.1.1 Emission Rate. Compliance with the emission rate standard may be determined by using the lower confidence limit of the emission rate (E_{ao}*) as follows:

$$E_{ao}^{*}=E_{ao}-t_{0.95}\ S_o \qquad \text{Eq. 19–26}$$

where:

S_o=standard deviation of the hourly average emission rates for each performance test period, ng/J (lb/million Btu).

$t_{0.95}$=values shown in Table 19–2 for the indicated number of data points n.

7.1.2 Control Device Removal Efficiency. Compliance with the overall emission reduction ($\%R_o$) may be determined by using the lower confidence limit of the emission rate (E_{ao}*) and the upper confidence limit of the inlet pollutant rate (E_{ai}*) in calculating the

control device removal efficiency ($\%R_g$) as follows:

$$\%R_g = 100\ [1.0 - E_{ao}^*/E_{ai}^*]$$

Eq. 19–27

$$E_{ai}^* = E_{ai} + t_{0.95}\ S_i$$

Eq. 19–28

where:

S_i=standard deviation of the hourly average inlet pollutant rates for each performance test period, ng/J (lb/million Btu).

TABLE 19–2—VALUES FOR $T_{0.95}$

n[1]	$t_{0.95}$	n[1]	$t_{0.95}$	n[1]	$t_{0.95}$
2	6.31	8	1.89	22–26	1.71
3	2.42	9	1.86	27–31	1.70
4	2.35	10	1.83	32–51	1.68
5	2.13	11	1.81	59–91	1.67
6	2.02	12–16	1.77	92–151	1.66
7	1.94	17–21	1.73	152 or more	1.65

[1] The values of this table are corrected for n-1 degrees of freedom. Use n equal to the number (H) of hourly average data points.

7.2 Standard Deviation of Hourly Average Pollutant Rates. Compute the standard deviation (S_e) of the hourly average pollutant rates using the following equation:

$$S_e = \sqrt{(1/H) - (1/H_r)}\ \left(\sqrt{\left[\sum_{j=1}^{H}(E_{hj} - E_a)^2\right]/(H-1)}\right) \qquad \text{Eq. 19-29}$$

where:

S=standard deviation of the hourly average pollutant rates for each performance test period, ng/J (lb/million Btu).

H_r=total numbers of hours in the performance test period (e.g., 720 hours for 30-day performance test period).

Equation 19–29 may be used to compute the standard deviation for both the outlet (S_o) and, if applicable, inlet (S_i) pollutant rates.

METHOD 20—DETERMINATION OF NITROGEN OXIDES, SULFUR DIOXIDE, AND DILUENT EMISSIONS FROM STATIONARY GAS TURBINES

1. *Principle and Applicability*

1.1 Applicability. This method is applicable for the determination of nitrogen oxides (NO_x), sulfur dioxide (SO_2), and a diluent gas, either oxygen (O_2) or carbon dioxide (CO_2), emissions from stationary gas turbines. For the NO_x and diluent concentration determinations, this method includes: (1) Measurement system design criteria; (2) Analyzer performance specifications and performance test procedures; and (3) Procedures for emission testing.

1.2 Principle. A gas sample is continuously extracted from the exhaust stream of a stationary gas turbine; a portion of the sample stream is conveyed to instrumental analyzers for determination of NO_x and diluent content. During each NO_x and diluent determination, a separate measurement of SO_2 emissions is made, using Method 6, or its equivalent. The diluent determination is used to adjust the NO_x and SO_2 concentrations to a reference condition.

2. *Definitions*

2.1 Measurement System. The total equipment required for the determination of a gas concentration or a gas emission rate. The system consists of the following major subsystems:

2.1.1 Sample Interface. That portion of a system that is used for one or more of the following: sample acquisition, sample transportation, sample conditioning, or protection of the analyzers from the effects of the stack effluent.

2.1.2 NO_x Analyzer. That portion of the system that senses NO_x and generates an output proportional to the gas concentration.

2.1.3 O_2 Analyzer. That portion of the system that senses O_2 and generates an output proportional to the gas concentration.

2.1.4 CO_2 Analyzer. That portion of the system that senses CO_2 and generates an output proportional to the gas concentration.

2.1.5 Data Recorder. That portion of the measurement system that provides a permanent record of the analyzer(s) output. The data recorder may include automatic data reduction capabilities.

2.2 Span Value. The upper limit of a gas concentration measurement range that is specified for affected source categories in the applicable part of the regulations.

2.3 Calibration Gas. A known concentration of a gas in an appropriate diluent gas.

2.4 Calibration Error. The difference between the gas concentration indicated by the measurement system and the known concentration of the calibration gas.

2.5 Zero Drift. The difference in the measurement system output readings from zero after a stated period of operation during which no unscheduled maintenance, repair, or adjustment took place and the input concentration at the time of the measurements was zero.

2.6 Calibration Drift. The difference in the measurement system output readings from the known concentration of the calibration gas after a stated period of operation during which no unscheduled maintenance, repair, or adjustment took place and the input at the time of the measurements was a high-level value.

2.7 Response Time. The amount of time required for the measurement system to display on the data output 95 percent of a step change in pollutant concentration.

2.8 Interference Response. The output response of the measurement system to a component in the sample gas, other than the gas component being measured.

3. *Measurement System Performance Specifications*

3.1 NO_2 to NO Converter. Greater than 90 percent conversion efficiency of NO_2 to NO.

3.2 Interference Response. Less than ±2 percent of the span value.

3.3 Response Time. No greater than 30 seconds.

3.4 Zero Drift. Less than ±2 percent of the span value over the period of each test run.

3.5 Calibration Drift. Less than ±2 percent of the span value over the period of each test run.

4. *Apparatus and Reagents*

4.1 Measurement System. Use any measurement system for NO_x and diluent that is expected to meet the specifications in this method. A schematic of an acceptable measurement system is shown in Figure 20–1. The essential components of the measurement system are described below:

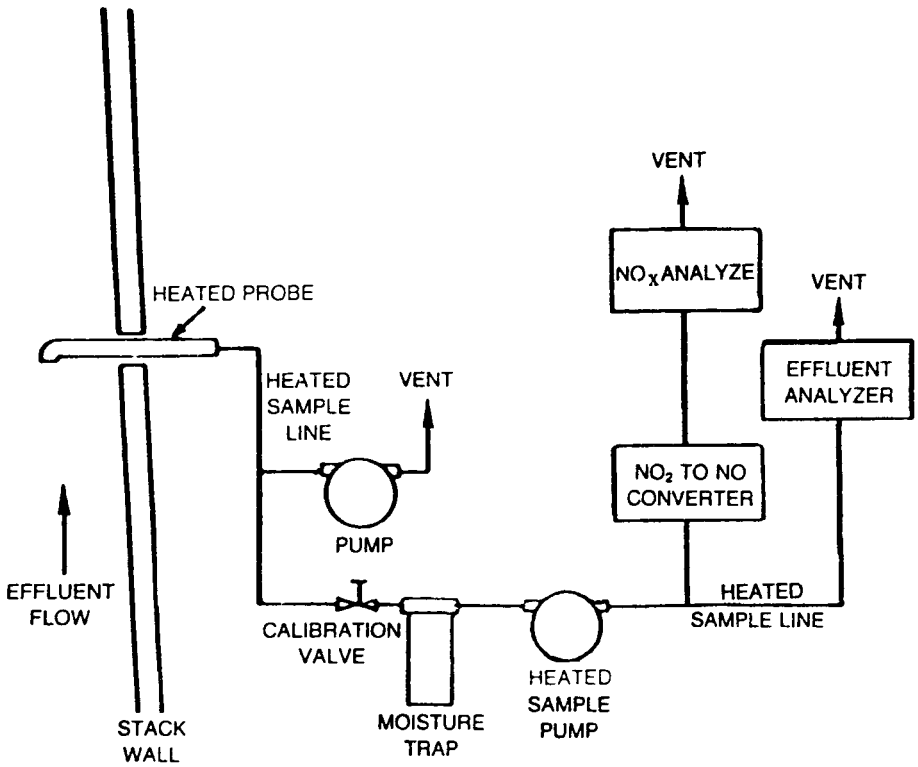

Figure 20.1. Measurement system design.

4.1.1 Sample Probe. Heated stainless steel, or equivalent, open-ended, straight tube of sufficient length to traverse the sample points.

4.1.2 Sample Line. Heated (>95 °C) stainless steel or Teflon tubing to transport the sample gas to the sample conditioners and analyzers.

4.1.3 Calibration Valve Assembly. A three-way valve assembly to direct the zero and calibration gases to the sample conditioners and to the analyzers. The calibration valve assembly shall be capable of blocking the sample gas flow and of introducing calibration gases to the measurement system when in the calibration mode.

4.1.4 NO_2 to NO Converter. That portion of the system that converts the nitrogen dioxide (NO_2) in the sample gas to nitrogen oxide (NO). Some analyzers are designed to measure NO_x as NO_2 on a wet basis and can be used without an NO_2 to NO converter or a moisture removal trap provided the sample line to the analyzer is heated (>95 °C) to the inlet of the analyzer. In addition, an NO_2 to NO converter is not necessary if the NO_2 portion of the exhaust gas is less than 5 percent of the total NO_x concentration. As a guideline, an NO_2 to NO converter is not necessary if the gas turbine is operated at 90 percent or more of peak load capacity. A converter is necessary under lower load conditions.

4.1.5 Moisture Removal Trap. A refrigerator-type condenser or other type device designed to continuously remove condensate from the sample gas while maintaining minimal contact between any condensate and the sample gas. The moisture removal trap is not necessary for analyzers that can measure NO_x concentrations on a wet basis; for these analyzers, (a) heat the sample line up to the inlet of the analyzers, (b) determine the moisture content using methods subject to the approval of the Administrator, and (c) correct the NO_x and diluent concentrations to a dry basis.

4.1.6 Particulate Filter. An in-stack or an out-of-stack glass fiber filter, of the type specified in EPA Method 5; however, an out-

of-stack filter is recommended when the stack gas temperature exceeds 250 to 300 °C.

4.1.7 Sample Pump. A nonreactive leak-free sample pump to pull the sample gas through the system at a flow rate sufficient to minimize transport delay. The pump shall be made from stainless steel or coated with Teflon or equivalent.

4.1.8 Sample Gas Manifold. A sample gas manifold to divert portions of the sample gas stream to the analyzers. The manifold may be constructed of glass, Teflon, stainless steel, or equivalent.

4.1.9 Diluent Gas Analyzer. An analyzer to determine the percent O_2 or CO_2 concentration of the sample gas.

4.1.10 Nitrogen Oxides Analyzer. An analyzer to determine the ppm NO_x concentration in the sample gas stream.

4.1.11 Data Recorder. A strip-chart recorder, analog computer, or digital recorder for recording measurement data.

4.2 Sulfur Dioxide Analysis. EPA Method 6 apparatus and reagents.

4.3 NO_x Calibration Gases. The calibration gases for the NO_x analyzer shall be NO in N_2. Use four calibration gas mixtures as specified below:

4.3.1 High-level Gas. A gas concentration that is equivalent to 80 to 90 percent of the span value.

4.3.2 Mid-level Gas. A gas concentration that is equivalent to 45 to 55 percent of the span value.

4.3.3 Low-level Gas. A gas concentration that is equivalent to 20 to 30 percent of the span value.

4.3.4 Zero Gas. A gas concentration of less than 0.25 percent of the span value. Ambient air may be used for the NO_x zero gas.

4.4 Diluent Calibration Gases.

4.4.1 For O_2 calibration gases, use purified air at 20.9 percent O_2 as the high-level O_2 gas. Use a gas concentration between 11 and 15 percent O_2 in nitrogen for the mid-level gas, and use purified nitrogen for the zero gas.

4.4.2 For CO_2 calibration gases, use a gas concentration between 8 and 12 percent CO_2 in air for the high-level calibration gas. Use a gas concentration between 2 and 5 percent CO_2 in air for the mid-level calibration gas, and use purified air (<100 ppm CO_2) as the zero level calibration gas.

5. *Measurement System Performance Test Procedures*

Perform the following procedures prior to measurement of emissions (Section 6) and only once for each test program, i.e., the series of all test runs for a given gas turbine engine.

5.1 Calibration Gas Checks. There are two alternatives for checking the concentrations of the calibration gases. (a) The first is to use calibration gases that are documented traceable to National Bureau of Standards Reference Materials. Use *Traceability Protocol for Establishing True Concentrations of Gases Used for Calibrations and Audits of Continuous Source Emission Monitors* (Protocol Number 1) that is available from the Environmental Monitoring Systems Laboratory, Quality Assurance Branch, Mail Drop 77, Environmental Protection Agency, Research Triangle Park, NC 27711. Obtain a certification from the gas manufacturer that the protocol was followed. These calibration gases are not to be analyzed with the Reference Methods. (b) The second alternative is to use calibration gases not prepared according to the protocol. If this alternative is chosen, within 1 month prior to the emission test, analyze each of the calibration gas mixtures in triplicate using Method 7 or the procedure outlined in Citation 1 for NO_x and use Method 3 for O_2 or CO_2. Record the results on a data sheet (example is shown in Figure 20–2). For the low-level, mid-level, or high-level gas mixtures, each of the individual NO_x analytical results must be within 10 percent (or 10 ppm, whichever is greater) of the triplicate set average (O_2 or CO_2 test results must be within 0.5 percent O_2 or CO_2); otherwise, discard the entire set and repeat the triplicate analyses. If the average of the triplicate reference method test results is within 5 percent for NO_x gas or 0.5 percent O_2 or CO_2 for the O_2 or CO_2 gas of the calibration gas manufacturer's tag value, use the tag value; otherwise, conduct at least three additional reference method test analyses until the results of six individual NO_x runs (the three original plus three additional) agree within 10 percent (or 10 ppm, whichever is greater) of the average (O_2 or CO_2 test results must be within 0.5 percent O_2 or CO_2). Then use this average for the cylinder value.

5.2 Measurement System Preparation. Prior to the emission test, assemble the measurement system following the manufacturer's written instructions in preparing and operating the NO_2 to NO converter, the NO_x analyzer, the diluent analyzer, and other components.

FIGURE 20–2—ANALYSIS OF CALIBRATION GASES

Date ———— (Must be within 1 month prior to the test period)

Reference method used

Sample run	Gas concentration, ppm		
	Low level[a]	Mid level[b]	High level[c]
1			
2			
3			
Average			
Maximum % deviation[d].			

[a] Average must be 20 to 30% of span value.

[b] Average must be 45 to 55% of span value.
[c] Average must be 80 to 90% of span value.
[d] Must be ≤±10% of applicable average or 10 ppm, whichever is greater.

5.3 Calibration Check. Conduct the calibration checks for both the NO_x and the diluent analyzers as follows:

5.3.1 After the measurement system has been prepared for use (Section 5.2), introduce zero gases and the mid-level calibration gases; set the analyzer output responses to the appropriate levels. Then introduce each of the remainder of the calibration gases described in Sections 4.3 or 4.4, one at a time, to the measurement system. Record the responses on a form similar to Figure 20–3.

5.3.2 If the linear curve determined from the zero and mid-level calibration gas responses does not predict the actual response of the low-level (not applicable for the diluent analyzer) and high-level gases within 2 percent of the span value, the calibration shall be considered invalid. Take corrective measures on the measurement system before proceeding with the test.

5.4 Interference Response. Introduce the gaseous components listed in Table 20–1 into the measurement system separately, or as gas mixtures. Determine the total interference output response of the system to these components in concentration units; record the values on a form similar to Figure 20–4. If the sum of the interference responses of the test gases for either the NO_x or diluent analyzers is greater than 2 percent of the applicable span value, take corrective measure on the measurement system.

FIGURE 20–3—ZERO AND CALIBRATION DATA

Turbine type ..... Identification number.
Date ..... Test number.
Analyzer type ..... Identification number.

	Cylinder value, ppm or %	Initial analyzer response, ppm or %	Final analyzer responses, ppm or %	Difference: initial-final, ppm or %
Zero gas.				
Low-level gas.				
Mid-level gas.				
High-level gas.				

$$\text{Percent drift} = \frac{\text{Absolute difference}}{\text{Span value}} \times 100$$

TABLE 20–1—INTERFERENCE TEST GAS CONCENTRATION

CO	500±50 ppm	CO_2	10±1 percent.
SO_2	200±20 ppm	O_2	20.9±1 percent.

FIGURE 20–4—INTERFERENCE RESPONSE

Date of test ————
Analyzer type
Serial No.

Test gas type	Concentration, ppm	Analyzer output response	% of span

$$\%\text{of span} = \frac{\text{Analyzer output response}}{\text{Instrument span}} \times 100$$

Conduct an interference response test of each analyzer prior to its initial use in the field. Thereafter, recheck the measurement system if changes are made in the instrumentation that could alter the interference response, e.g., changes in the type of gas detector.

In lieu of conducting the interference response test, instrument vendor data, which

demonstrate that for the test gases of Table 20–1 the interference performance specification is not exceeded, are acceptable.

5.5 Response Time. To determine response time, first introduce zero gas into the system at the calibration valve until all readings are stable; then, switch to monitor the stack effluent until a stable reading can be obtained. Record the upscale response time. Next, introduce high-level calibration gas into the system. Once the system has stabilized at the high-level concentration, switch to monitor the stack effluent and wait until a stable value is reached. Record the downscale response time. Repeat the procedure three times. A stable value is equivalent to a change of less than 1 percent of span value for 30 seconds or less than 5 percent of the measured average concentration for 2 minutes. Record the response time data on a form similar to Figure 20–5, the readings of the upscale or downscale reponse time, and report the greater time as the ''response time'' for the analyzer. Conduct a response time test prior to the initial field use of the measurement system, and repeat if changes are made in the measurement system.

FIGURE 20–5—RESPONSE TIME

Date of test ————

Analyzer type

S/N

Span gas concentration: ——— ppm.
Analyzer span setting: ——— ppm.
Upscale:
1 ——— seconds.
2 ——— seconds.
3 ——— seconds.
Average upscale response —— seconds.

Downscale:
1 ——— seconds.
2 ——— seconds.
3 ——— seconds.
Average downscale response —— seconds.

System response time=
slower average time=
——— seconds.

5.6 NO_2 to NO Conversion Efficiency.

5.6.1 Add gas from the mid-level NO in N_2 calibration gas cylinder to a clean, evacuated, leak-tight Tedlar bag. Dilute this gas approximately 1:1 with 20.9 percent O_2, purified air. Immediately attach the bag outlet to the calibration valve assembly and begin operation of the sampling system. Operate the sampling system, recording the NO_x response, for at least 30 minutes. If the NO_2 to NO conversion is 100 percent, the instrument response will be stable at the highest peak value observed. If the response at the end of 30 minutes decreases more than 2.0 percent of the highest peak value, the system is not acceptable and corrections must be made before repeating the check.

5.6.2 Alternatively, the NO_2 to NO converter check described in Title 40, Part 86: Certification and Test Procedures for Heavy-duty Engines for 1979 and Later Model Years may be used. Other alternative procedures may be used with approval of the Administrator.

6. *Emission Measurement Test Procedure*

6.1 Preliminaries.

6.1.1 Selection of a Sampling Site. Select a sampling site as close as practical to the exhaust of the turbine. Turbine geometry, stack configuration, internal baffling, and point of introduction of dilution air will vary for different turbine designs. Thus, each of these factors must be given special consideration in order to obtain a representative sample. Whenever possible, the sampling site shall be located upstream of the point of introduction of dilution air into the duct. Sample ports may be located before or after the upturn elbow, in order to accommodate the configuration of the turning vanes and baffles and to permit a complete, unobstructed traverse of the stack. The sample ports shall not be located within 5 feet or 2 diameters (whichever is less) of the gas discharge to atmosphere. For supplementary-fired, combined-cycle plants, the sampling site shall be located between the gas turbine and the boiler. The diameter of the sample ports shall be sufficient to allow entry of the sample probe.

6.1.2 A preliminary O_2 or CO_2 traverse is made for the purpose of selecting sampling points of low O_2 or high CO_2 concentrations, as appropriate for the measurement system. Conduct this test at the turbine operating condition that is the lowest percentage of peak load operation included in the test program. Follow the procedure below, or use an alternative procedure subject to the approval of the Administrator.

6.1.2.1 Minimum Number of Points. Select a minimum number of points as follows: (1) Eight, for stacks having cross-sectional areas less than 1.5 m^2 (16.1 ft^2); (2) eight plus one additional sample point for each 0.2 m^2 (2.2 ft^2 of areas, for stacks of 1.5 m^2 to 10.0 m^2 (16.1–107.6 ft^2) in cross-sectional area; and (3) 49 sample points (48 for circular stacks) for stacks greater than 10.0 m^2 (107.6 ft^2) in cross-sectional area. Note that for circular ducts, the number of sample points must be a multiple of 4, and for rectangular ducts, the number of points must be one of those listed in Table 20–2; therefore, round off the number of points (upward), when appropriate.

6.1.2.2 Cross-sectional Layout and Location of Traverse Points. After the number of traverse points for the preliminary diluent sampling has been determined, use Method 1 to located the traverse points.

6.1.2.3 Preliminary Diluent Measurement. While the gas turbine is operating at the

lowest percent of peak load, conduct a preliminary diluent measurement as follows: Position the probe at the first traverse point and begin sampling. The minimum sampling time at each point shall be 1 minute plus the average system response time. Determine the average steady-state concentration of diluent at each point and record the data on Figure 20–6.

6.1.2.4 Selection of Emission Test Sampling Points. Select the eight sampling points at which the lowest O_2 concentrations or highest CO_2 concentrations were obtained. Sample at each of these selected points during each run at the different turbine load conditions. More than eight points may be used, if desired, providing that the points selected as described above are included.

TABLE 20–2—CROSS-SECTIONAL LAYOUT FOR RECTANGULAR STACKS

	Matrix layout
No. of traverse points:	
9	3 x 3
12	4 x 3
16	4 x 4
20	5 x 4
25	5 x 5
30	6 x 5
36	6 x 6
42	7 x 6
49	7 x 7

FIGURE 20–6—PRELIMINARY DILUENT TRAVERSE

Date _____

Location:
Plant _____
City, State _____

Turbine identification:
Manufacturer _____
Model, serial number _____

Sample point	Diluent concentration, ppm

6.2 NO_x and Diluent Measurement. This test is to be conducted at each of the specified load conditions. Three test runs at each load condition constitute a complete test.

6.2.1 At the beginning of each NO_x test run and, as applicable, during the run, record turbine data as indicated in Figure 20–7. Also, record the location and number of the traverse points on a diagram.

6.2.2 Position the probe at the first point determined in the preceding section and begin sampling. The minimum sampling time at each point shall be at least 1 minute plus the average system response time. Determine the average steady-state concentration of diluent and NO_x at each point and record the data on Figure 20–8.

FIGURE 20–7—STATIONARY GAS TURBINE DATA

TURBINE OPERATION RECORD

Test operator _____ Date ____

Turbine identification:
Type _____
Serial No. _____

Location:
Plant _____
City _____

Ambient temperature
Ambient humidity
Test time start
Test time finish
Fuel flow rate[a]
Water or steam flow rate[a]
Ambient pressure
Ultimate fuel analysis:
C _____
H _____
O _____
N _____
S _____
Ash _____
H_20 _____

Trace metals:
Na _____
Va _____
K _____
etc[b] _____

Operating load

[a]Describe measurement method, i.e., continuous flow meter, start finish volumes, etc.

[b]i.e., additional elements added for smoke suppression.

FIGURE 20–8—STATIONARY GAS TURBINE SAMPLE POINT RECORD

Turbine identification:
Manufacturer _____
Model, serial No. _____

Location:
Plant _____
City, State _____

Ambient temperature
Ambient pressure
Date _____
Test time: start
Test time: finish
Test operator name

Diluent instrument type
Serial No _____

NO_x instrument type
Serial No. _____

Sample point	Time, min	Diluent[a], %	NO_x a, ppm

[a]Average steady-state value from recorder or instrument readout.

6.2.3 After sampling the last point, conclude the test run by recording the final turbine operating parameters and by determining the zero and calibration drift, as follows:

Immediately following the test run at each load condition, or if adjustments are necessary for the measurement system during the tests, reintroduce the zero and mid-level calibration gases as described in Sections 4.3 and 4.4, one at a time, to the measurement system at the calibration valve assembly. (Make no adjustments to the measurement system until after the drift checks are made). Record the analyzers' responses on a form similar to Figure 20–3. If the drift values exceed the specified limits, the test run preceding the check is considered invalid and will be repeated following corrections to the measurement system. Alternatively, recalibrate the measurement system and recalculate the measurement data. Report the test results based on both the initial calibration and the recalibration data.

6.3 SO_2 Measurement. This test is conducted only at the 100 percent peak load condition. Determine SO_2 using Method 6, or equivalent, during the test. Select a minimum of six total points from those required for the NO_x measurements; use two points for each sample run. The sample time at each point shall be at least 10 minutes. Average the diluent readings taken during the NO_x test runs at sample points corresponding to the SO_2 traverse points (see Section 6.2.2) and use this average diluent concentration to correct the integrated SO_2 concentration obtained by Method 6 to 15 percent diluent (see Equation 20–1).

If the applicable regulation allows fuel sampling and analysis for fuel sulfur content to demonstrate compliance with sulfur emission unit, emission sampling with Method 6 is not required, provided the fuel sulfur content meets the limits of the regulation.

7. *Emission Calculations*

7.1 Moisture Correction. Measurement data used in most of these calculations must be on a dry basis. If measurements must be corrected to dry conditions, use the following equation:

$$C_d = \frac{C_w}{1 - B_{ws}} \qquad \text{Eq. 20-1}$$

where:

C_d=Pollutant or diluent concentration adjusted to dry conditions, ppm or percent.

C_w=Pollutant or diluent concentration measured under moist sample conditions, ppm or percent.

B_{ws}=Moisture content of sample gas as measured with Method 4, reference method, or other approved method, percent/100.

7.2 CO_2 Correction Factor. If pollutant concentrations are to be corrected to 15 percent O_2 and CO_2 concentration is measured in lieu of O_2 concentration measurement, a CO_2 correction factor is needed. Calculate the CO_2 correction factor as follows:

7.2.1 Calculate the fuel-specific F_0 value for the fuel burned during the test using values obtained from Method 19, Section 5.2, and the following equation.

$$F_o = \frac{0.209\ F_d}{F_c} \qquad \text{Eq. 20-2}$$

where:

F_O=Fuel factor based on the ratio of oxygen volume to the ultimate CO_2 volume produced by the fuel at zero percent excess air, dimensionless.

0.209=Fraction of air that is oxygen, percent/100.

F_d=Ratio of the volume of dry effluent gas to the gross calorific value of the fuel from Method 19, dsm^3/J ($dscf/10^6$ Btu).

F_c=Ratio of the volume of carbon dioxide produced to the gross calorific value of the fuel from Method 19, dsm^3/J ($dscf^6$ Btu).

7.2.2. Calculate the CO_2 correction factor for correcting measurement data to 15 percent oxygen, as follows:

$$X_{CO2} = \frac{5.9}{F_o} \qquad \text{Eq. 20-3}$$

where:

X_{CO2}=CO_2 Correction factor, percent.

5.9=20.9 percent O_2 − 15 percent O_2, the defined O_2 correction value, percent.

7.3 Correction of Pollutant Concentrations to 15 percent O_2. Calculate the NO_x and SO_2 gas concentrations adjusted to 15 percent O_2 using Equation 20–4 or 20–5, as appropriate. The correction to 15 percent O_2 is very sensitive to the accuracy of the O_2 or CO_2 concentration measurement. At the level of the analyzer drift specified in Section 3, the O_2 or CO_2 correction can exceed 5 percent at the concentration levels expected in gas turbine exhaust gases. Therefore, O_2

or CO_2 analyzer stability and careful calibration are necessary.

7.3.1 Correction of Pollutant Concentration Using O_2 Concentration. Calculate the O_2 corrected pollutant concentration, as follows:

$$C_{adj} = C_d \frac{5.9}{20.9 - \%O_2} \qquad \text{Eq. 20-4}$$

where:

C_{adj}=Pollutant concentration corrected to 15 percent O_2 ppm.

C_d=Pollutant concentration measured, dry basis, ppm.

$\%O_2$=Measured O_2 concentration dry basis, percent.

7.3.2 Correction of Pollutant Concentration Using CO_2 Concentration. Calculate the CO_2 corrected pollutant concentration, as follows:

$$C_{adj} = C_d \frac{X_{CO2}}{\%CO_2} \qquad \text{Eq. 20-5}$$

where:

$\%CO_2$=Measured CO_2 concentration measured, dry basis, percent.

7.4 Average Adjusted NO_x Concentration. Calculate the average adjusted NO_x concentration by summing the adjusted values for each sample point and dividing by the number of points for each run.

7.5 NO_x and SO_2 Emission Rate Calculations. The emission rates for NO_x and SO_2 in units of pollutant mass per quantity of heat input can be calculated using the pollutant and diluent concentrations and fuel-specific F-factors based on the fuel combustion characteristics. The measured concentrations of pollutant in units of parts per million by volume (ppm) must be converted to mass per unit volume concentration units for these calculations. Use the following table for such conversions:

CONVERSION FACTORS FOR CONCENTRATION

From	To	Multiply by
g/sm³	ng/sm³	10^9
mg/sm³	ng/sm³	10^6
lb/scf	ng/sm³	1.602×10^{13}
ppm (SO_2)	ng/sm³	2.660×10^6
ppm (NO_x)	ng/sm³	1.912×10^6
ppm (SO_2)	lb/scf	1.660×10^{-7}
ppm (NO_x)	lb/scf	1.194×10^{-7}

7.5.1 Calculation of Emission Rate Using Oxygen Correction. Both the O_2 concentration and the pollutant concentration must be on a dry basis. Calculate the pollutant emission rate, as follows:

$$E = C_d F_d \frac{20.9}{20.9 - \%O_2} \qquad \text{Eq. 20-6}$$

where:

E=Mass emission rate of pollutant, ng/J (lb/10^6 Btu).

7.5.2 Calculation of Emission Rate Using Carbon Dioxide Correction. The CO_2 concentration and the pollutant concentration may be on either a dry basis or a wet basis, but both concentrations must be on the same basis for the calculations. Calculate the pollutant emission rate using Equation 20–7 or 20–8:

$$E = C_d F_c \frac{100}{\%CO_2} \qquad \text{Eq. 20-7}$$

$$E = C_w F_c \frac{100}{\%CO_{2w}} \qquad \text{Eq. 20-8}$$

where:

C_w=Pollutant concentration measured on a moist sample basis, ng/sm³ (lb/scf).

$\%CO_{2w}$=Measured CO_2 concentration measured on a moist sample basis, percent.

8. *Bibliography*

1. Curtis, F. A Method for Analyzing NO_x Cylinder Gases-Specific Ion Electrode Procedure, Monograph available from Emission Measurement Laboratory, ESED, Research Triangle Park, NC 27711, October 1978.

2. Sigsby, John E., F. M. Black, T. A. Bellar, and D. L. Klosterman. Chemiluminescent Method for Analysis of Nitrogen Compounds in Mobile Source Emissions (NO, NO_2, and NH_3). ''Environmental Science and Technology,'' 7:51–54. January 1973.

3. Shigehara, R.T., R.M. Neulicht, and W.S. Smith. Validating Orsat Analysis Data from Fossil Fuel-Fired Units. Emission Measurement Branch, Emission Standards and Engineering Division, Office of Air Quality Planning and Standards, U.S. Environmental Protection Agency, Research Triangle Park, NC 27711. June 1975.

METHOD 21—DETERMINATION OF VOLATILE ORGANIC COMPOUNDS LEAKS

1. *Applicability and Principle*

1.1 Applicability. This method applies to the determination of volatile organic compound (VOC) leaks from process equipment. These sources include, but are not limited to, valves, flanges and other connections, pumps and compressors, pressure relief devices, process drains, open-ended valves, pump and compressor seal system degassing vents, accumulator vessel vents, agitator seals, and access door seals.

1.2 Principle. A portable instrument is used to detect VOC leaks from individual sources. The instrument detector type is not specified, but it must meet the specifications and performance criteria contained in Section 3. A leak definition concentration based on a reference compound is specified in each

applicable regulation. This procedure is intended to locate and classify leaks only, and is not to be used as a direct measure of mass emission rates from individual sources.

2. *Definitions*

2.1 Leak Definition Concentration. The local VOC concentration at the surface of a leak source that indicates that a VOC emission (leak) is present. The leak definition is an instrument meter reading based on a reference compound.

2.2 Reference Compound. The VOC species selected as an instrument calibration basis for specification of the leak definition concentration. (For example: If a leak definition concentration is 10,000 ppmv as methane, then any source emission that results in a local concentration that yields a meter reading of 10,000 on an instrument calibrated with methane would be classified as a leak. In this example, the leak definition is 10,000 ppmv, and the reference compound is methane.)

2.3 Calibration Gas. The VOC compound used to adjust the instrument meter reading to a known value. The calibration gas is usually the reference compound at a concentration approximately equal to the leak definition concentration.

2.4 No Detectable Emission. Any VOC concentration at a potential leak source (adjusted for local VOC ambient concentration) that is less than a value corresponding to the instrument readability specification of section 3.1.1(c) indicates that a leak is not present.

2.5 Response Factor. The ratio of the known concentration of a VOC compound to the observed meter reading when measured using an instrument calibrated with the reference compound specified in the application regulation.

2.6 Calibration Precision. The degree of agreement between measurements of the same known value, expressed as the relative percentage of the average difference between the meter readings and the known concentration to the known concentration.

2.7 Response Time. The time interval from a step change in VOC concentration at the input of the sampling system to the time at which 90 percent of the corresponding final value is reached as displayed on the instrument readout meter.

3. *Apparatus*

3.1 Monitoring Instrument.

3.1.1 Specifications.

a. The VOC instrument detector shall respond to the compounds being processed. Detector types which may meet this requirement include, but are not limited to, catalytic oxidation, flame ionization, infrared absorption, and photoionization.

b. Both the linear response range and the measurable range of the instrument for each of the VOC to be measured, and for the VOC calibration gas that is used for calibration, shall encompass the leak definition concentration specified in the regulation. A dilution probe assembly may be used to bring the VOC concentration within both ranges; however, the specifications for instrument response time and sample probe diameter shall still be met.

c. The scale of the instrument meter shall be readable to ±2.5 percent of the specified leak definition concentration when performing a no detectable emission survey.

d. The instrument shall be equipped with an electrically driven pump to insure that a sample is provided to the detector at a constant flow rate. The nominal sample flow rate, as measured at the sample probe tip, shall be 0.10 to 3.0 liters per minute when the probe is fitted with a glass wool plug or filter that may be used to prevent plugging of the instrument.

e. The instrument shall be intrinsically safe as defined by the applicable U.S.A. standards (e.g., National Electric Code by the National Fire Prevention Association) for operation in any explosive atmospheres that may be encountered in its use. The instrument shall, at a minimum, be intrinsically safe for Class 1, Division 1 conditions, and Class 2, Division 1 conditions, as defined by the example Code. The instrument shall not be operated with any safety device, such as an exhaust flame arrestor, removed.

f. The instrument shall be equipped with a probe or probe extension for sampling not to exceed ¼ in. in outside diameter, with a single end opening for admission of sample.

3.1.2 Performance Criteria.

(a) The instrument response factors for each of the VOC to be measured shall be less than 10. When no instrument is available that meets this specification when calibrated with the reference VOC specified in the applicable regulation, the available instrument may be calibrated with one of the VOC to be measured, or any other VOC, so long as the instrument then has a response factor of less than 10 for each of the VOC to be measured.

(b) The instrument response time shall be equal to or less than 30 seconds. The instrument pump, dilution probe (if any), sample probe, and probe filter, that will be used during testing, shall all be in place during the response time determination.

c. The calibration precision must be equal to or less than 10 percent of the calibration gas value.

d. The evaluation procedure for each parameter is given in Section 4.4.

3.1.3 Performance Evaluation Requirements.

a. A response factor must be determined for each compound that is to be measured, either by testing or from reference sources. The response factor tests are required before

placing the analyzer into service, but do not have to be repeated at subsequent intervals.

b. The calibration precision test must be completed prior to placing the analyzer into service, and at subsequent 3-month intervals or at the next use whichever is later.

c. The response time test is required prior to placing the instrument into service. If a modification to the sample pumping system or flow configuration is made that would change the response time, a new test is required prior to further use.

3.2 Calibration Gases. The monitoring instrument is calibrated in terms of parts per million by volume (ppmv) of the reference compound specified in the applicable regulation. The calibration gases required for monitoring and instrument performance evaluation are a zero gas (air, less than 10 ppmv VOC) and a calibration gas in air mixture approximately equal to the leak definition specified in the regulation. If cylinder calibration gas mixtures are used, they must be analyzed and certified by the manufacturer to be within ±2 percent accuracy, and a shelf life must be specified. Cylinder standards must be either reanalyzed or replaced at the end of the specified shelf life. Alternately, calibration gases may be prepared by the user according to any accepted gaseous standards preparation procedure that will yield a mixture accurate to within ±2 percent. Prepared standards must be replaced each day of use unless it can be demonstrated that degradation does not occur during storage.

Calibrations may be performed using a compound other than the reference compound if a conversion factor is determined for that alternative compound so that the resulting meter readings during source surveys can be converted to reference compound results.

4. *Procedures*

4.1 Pretest Preparations. Perform the instrument evaluation procedures given in Section 4.4 if the evaluation requirements of Section 3.1.3 have not been met.

4.2 Calibration Procedures. Assemble and start up the VOC analyzer according to the manufacturer's instructions. After the appropriate warmup period and zero internal calibration procedure, introduce the calibration gas into the instrument sample probe. Adjust the instrument meter readout to correspond to the calibration gas value.

NOTE: If the meter readout cannot be adjusted to the proper value, a malfunction of the analyzer is indicated and corrective actions are necessary before use.

4.3 Individual Source Surveys.

4.3.1 Type I—Leak Definition Based on Concentration. Place the probe inlet at the surface of the component interface where leakage could occur. Move the probe along the interface periphery while observing the instrument readout. If an increased meter reading is observed, slowly sample the interface where leakage is indicated until the maximum meter reading is obtained. Leave the probe inlet at this maximum reading location for approximately two times the instrument response time. If the maximum observed meter reading is greater than the leak definition in the applicable regulation, record and report the results as specified in the regulation reporting requirements. Examples of the application of this general technique to specific equipment types are:

a. Valves—The most common source of leaks from valves is at the seal between the stem and housing. Place the probe at the interface where the stem exits the packing gland and sample the stem circumference. Also, place the probe at the interface of the packing gland take-up flange seat and sample the periphery. In addition, survey valve housings of multipart assembly at the surface of all interfaces where a leak could occur.

b. Flanges and Other Connections—For welded flanges, place the probe at the outer edge of the flange-gasket interface and sample the circumference of the flange. Sample other types of nonpermanent joints (such as threaded connections) with a similar traverse.

c. Pumps and Compressors—Conduct a circumferential traverse at the outer surface of the pump or compressor shaft and seal interface. If the source is a rotating shaft, position the probe inlet within 1 cm of the shaft-seal interface for the survey. If the housing configuration prevents a complete traverse of the shaft periphery, sample all accessible portions. Sample all other joints on the pump or compressor housing where leakage could occur.

d. Pressure Relief Devices—The configuration of most pressure relief devices prevents sampling at the sealing seat interface. For those devices equipped with an enclosed extension, or horn, place the probe inlet at approximately the center of the exhaust area to the atmosphere.

e. Process Drains—For open drains, place the probe inlet at approximately the center of the area open to the atmosphere. For covered drains, place the probe at the surface of the cover interface and conduct a peripheral traverse.

f. Open-Ended Lines or Valves—Place the probe inlet at approximately the center of the opening to the atmosphere.

g. Seal System Degassing Vents and Accumulator Vents—Place the probe inlet at approximately the center of the opening to the atmosphere.

h. Access Door Seals—Place the probe inlet at the surface of the door seal interface and conduct a peripheral traverse.

4.3.2 Type II—''No Detectable Emission''.

Determine the local ambient concentration around the source by moving the probe inlet randomly upwind and downwind at a distance of one to two meters from the source. If an interference exists with this determination due to a nearby emission or leak, the local ambient concentration may be determined at distances closer to the source, but in no case shall the distance be less than 25 centimeters. Then move the probe inlet to the surface of the source and determine the concentration described in 4.3.1. The difference between these concentrations determines whether there are no detectable emissions. Record and report the results as specified by the regulation.

For those cases where the regulation requires a specific device installation, or that specified vents be ducted or piped to a control device, the existence of these conditions shall be visually confirmed. When the regulation also requires that no detectable emissions exist, visual observations and sampling surveys are required. Examples of this technique are:

(a) Pump or Compressor Seals—If applicable, determine the type of shaft seal. Preform a survey of the local area ambient VOC concentration and determine if detectable emissions exist as described above.

(b) Seal System Degassing Vents, Accumulator Vessel Vents, Pressure Relief Devices—If applicable, observe whether or not the applicable ducting or piping exists. Also, determine if any sources exist in the ducting or piping where emissions could occur prior to the control device. If the required ducting or piping exists and there are no sources where the emissions could be vented to the atmosphere prior to the control device, then it is presumed that no detectable emissions are present. If there are sources in the ducting or piping where emissions could be vented or sources where leaks could occur, the sampling surveys described in this paragraph shall be used to determine if detectable emissions exist.

4.3.3 Alternative Screening Procedure. A screening procedure based on the formation of bubbles in a soap solution that is sprayed on a potential leak source may be used for those sources that do not have continuously moving parts, that do not have surface temperatures greater than the boiling point or less than the freezing point of the soap solution, that do not have open areas to the atmosphere that the soap solution cannot bridge, or that do not exhibit evidence of liquid leakage. Sources that have these conditions present must be surveyed using the instrument techniques of 4.3.1 or 4.3.2.

Spray a soap solution over all potential leak sources. The soap solution may be a commercially available leak detection solution or may be prepared using concentrated detergent and water. A pressure sprayer or a squeeze bottle may be used to dispense the solution. Observe the potential leak sites to determine if any bubbles are formed. If no bubbles are observed, the source is presumed to have no detectable emissions or leaks as applicable. If any bubbles are observed, the instrument techniques of 4.3.1 or 4.3.2 shall be used to determine if a leak exists, or if the source has detectable emissions, as applicable.

4.4 Instrument Evaluation Procedures. At the beginning of the instrument performance evaluation test, assemble and start up the instrument according to the manufacturer's instructions for recommended warmup period and preliminary adjustments.

4.4.1 Response Factor. Calibrate the instrument with the reference compound as specified in the applicable regulation. For each organic species that is to be measured during individual source surveys, obtain or prepare a known standard in air at a concentration of approximately 80 percent of the applicable leak definition unless limited by volatility or explosivity. In these cases, prepare a standard at 90 percent of the saturation concentration, or 70 percent of the lower explosive limit, respectively. Introduce this mixture to the analyzer and record the observed meter reading. Introduce zero air until a stable reading is obtained. Make a total of three measurements by alternating between the known mixture and zero air. Calculate the response factor for each repetition and the average response factor.

Alternatively, if response factors have been published for the compounds of interest for the instrument or detector type, the response factor determination is not required, and existing results may be referenced. Examples of published response factors for flame ionization and catalytic oxidation detectors are included in Bibliography.

4.4.2 Calibration Precision. Make a total of three measurements by alternately using zero gas and the specified calibration gas. Record the meter readings. Calculate the average algebraic difference between the meter readings and the known value. Divide this average difference by the known calibration value and mutiply by 100 to express the resulting calibration precision as a percentage.

4.4.3 Response Time. Introduce zero gas into the instrument sample probe. When the meter reading has stabilized, switch quickly to the specified calibration gas. Measure the time from switching to when 90 percent of the final stable reading is attained. Perform this test sequence three times and record the results. Calculate the average response time.

5. *Bibliography*

1. DuBose, D.A., and G.E. Harris. Response Factors of VOC Analyzers at a Meter Reading of 10,000 ppmv for Selected Organic Compounds. U.S. Environmental Protection Agency, Research Triangle Park, NC. Publication No. EPA 600/2–81–051. September 1981.

2. Brown, G.E., et al. Response Factors of VOC Analyzers Calibrated with Methane for Selected Organic Compounds. U.S. Environmental Protection Agency, Research Triangle Park, NC. Publication No. EPA 600/2–81–022. May 1981.

3. DuBose, D.A., et al. Response of Portable VOC Analyzers to Chemical Mixtures. U.S. Environmental Protection Agency, Research Triangle Park, NC. Publication No. EPA 600/2–81–110. September 1981.

METHOD 22—VISUAL DETERMINATION OF FUGITIVE EMISSIONS FROM MATERIAL SOURCES AND SMOKE EMISSIONS FROM FLARES

1. *Introduction*

This method involves the visual determination of fugitive emissions, i.e., emissions not emitted directly from a process stack or duct. Fugitive emissions include emissions that (1) escape capture by process equipment exhaust hoods; (2) are emitted during material transfer; (3) are emitted from buildings housing material processing or handling equipment; and (4) are emitted directly from process equipment. This method is used also to determine visible smoke emissions from flares used for combustion of waste process materials.

This method determines the amount of time that any visible emissions occur during the observation period, i.e., the accumulated emission time. This method does not require that the opacity of emissions be determined. Since this procedure requires only the determination of whether a visible emission occurs and does not require the determination of opacity levels, observer certification according to the procedures of Method 9 are not required. However, it is necessary that the observer is educated on the general procedures for determining the presence of visible emissions. As a minimum, the observer must be trained and knowledgeable regarding the effects on the visibility of emissions caused by background contrast, ambient lighting, observer position relative to lighting, wind, and the presence of uncombined water (condensing water vapor). This training is to be obtained from written materials found in Citations 1 and 2 of Bibliography or from the lecture portion of the Method 9 certification course.

2. *Applicability and Principle*

2.1 Applicability. This method applies to the determination of the frequency of fugitive emissions from stationary sources (located indoors or outdoors) when specified as the test method for determining compliance with new source performance standards.

This method also is applicable for the determination of the frequency of visible smoke emissions from flares.

2.2 Principle. Fugitive emissions produced during material processing, handling, and transfer operations or smoke emissions from flares are visually determined by an observer without the aid of instruments.

3. *Definitions*

3.1 Emission Frequency. Percentage of time that emissions are visible during the observation period.

3.2 Emission Time. Accumulated amount of time that emissions are visible during the observation period.

3.3 Fugitive Emissions. Pollutant generated by an affected facility which is not collected by a capture system and is released to the atmosphere.

3.4 Smoke Emissions. Pollutant generated by combustion in a flare and occurring immediately downstream of the flame. Smoke occurring within the flame, but not downstream of the flame, is not considered a smoke emission.

3.5 Observation Period. Accumulated time period during which observations are conducted, not to be less than the period specified in the applicable regulation.

4. *Equipment*

4.1 Stopwatches. Accumulative type with unit divisions of at least 0.5 seconds; two required.

4.2 Light Meter. Light meter capable of measuring illuminance in the 50- to 200-lux range; required for indoor observations only.

5. *Procedure*

5.1 Position. Survey the affected facility or building or structure housing the process to be observed and determine the locations of potential emissions. If the affected facility is located inside a building, determine an observation location that is consistent with the requirements of the applicable regulation (i.e., outside observation of emissions escaping the building/structure or inside observation of emissions directly emitted from the affected facility process unit). Then select a position that enables a clear view of the potential emission point(s) of the affected facility or of the building or structure housing the affected facility, as appropriate for the applicable subpart. A position at least 15 feet, but not more than 0.25 miles, from the emission source is recommended. For outdoor locations, select a position where the sun is not directly in the observer's eyes.

5.2 Field Records.

5.2.1 Outdoor Location. Record the following information on the field data sheet (Figure 22–1): company name, industry, process unit, observer's name, observer's affiliation, and date. Record also the estimated wind speed, wind direction, and sky condition. Sketch the process unit being observed and note the observer location relative to the source and the sun. Indicate the potential and actual emission points on the sketch.

5.2.2 Indoor Location. Record the following information on the field data sheet (Figure 22–2): company name, industry, process unit, observer's name, observer's affiliation, and date. Record as appropriate the type, location, and intensity of lighting on the data sheet. Sketch the process unit being observed and note observer location relative to the source. Indicate the potential and actual fugitive emission points on the sketch.

5.3 Indoor Lighting Requirements. For indoor locations, use a light meter to measure the level of illumination at a location as close to the emission source(s) as is feasible. An illumination of greater than 100 lux (10 foot candles) is considered necessary for proper application of this method.

5.4 Observations. Record the clock time when observations begin. Use one stopwatch to monitor the duration of the observation period; start this stopwatch when the observation period begins. If the observation period is divided into two or more segments by process shutdowns or observer rest breaks, stop the stopwatch when a break begins and restart it without resetting when the break ends. Stop the stopwatch at the end of the observation period. The accumulated time indicated by this stopwatch is the duration of the observation period. When the observation period is completed, record the clock time.

During the observation period, continously watch the emission source. Upon observing an emission (condensed water vapor is not considered an emission), start the second accumulative stopwatch; stop the watch when the emission stops. Continue this procedure for the entire observation period. The accumulated elapsed time on this stopwatch is the total time emissions were visible during the observation period, i.e., the emission time.

5.4.1 Observation Period. Choose an observation period of sufficient length to meet the requirements for determining compliance with the emission regulation in the applicable subpart. When the length of the observation period is specifically stated in the applicable subpart, it may not be necessary to observe the source for this entire period if the emission time required to indicate noncompliance (based on the specified observation period) is observed in a shorter time period. In other words, if the regulation prohibits emissions for more than 6 minutes in any hour, then observations may (optional) be stopped after an emission time of 6 minutes is exceeded. Similarly, when the regulation is expressed as an emission frequency and the regulation prohibits emissions for greater than 10 percent of the time in any hour, then observations may (optional) be terminated after 6 minutes of emissions are observed since 6 minutes is 10 percent of an hour. In any case, the observation period shall not be less than 6 minutes in duration. In some cases, the process operation may be intermittent or cyclic. In such cases, it may be convenient for the observation period to coincide with the length of the process cycle.

5.4.2 Observer Rest Breaks. Do not observe emissions continuously for a period of more than 15 to 20 minutes without taking a rest break. For sources requiring observation periods of greater than 20 minutes, the observer shall take a break of not less than 5 minutes and not more than 10 minutes after every 15 to 20 minutes of observation. If continuous observations are desired for extended time periods, two observers can alternate between making observations and taking breaks.

5.4.3 Visual Interference. Occasionally, fugitive emissions from sources other than the affected facility (e.g., road dust) may prevent a clear view of the affected facility. This may particularly be a problem during periods of high wind. If the view of the potential emission points is obscured to such a degree that the observer questions the validity of continuing observations, then the observations are terminated, and the observer clearly notes this fact on the data form.

5.5 Recording Observations. Record the accumulated time of the observation period on the data sheet as the observation period duration. Record the accumulated time emissions were observed on the data sheet as the emission time. Record the clock time the observation period began and ended, as well as the clock time any observer breaks began and ended.

6. *Calculations*

If the applicable subpart requires that the emission rate be expressed as an emission frequency (in percent), determine this value as follows: Divide the accumulated emission time (in seconds) by the duration of the observation period (in seconds) or by any minimum observation period required in the applicable subpart, if the acutal observation period is less than the required period and multiply this quotient by 100.

7. *Bibliography*

1. Missan, Robert and Arnold Stein. Guidelines for Evaluation of Visible Emissions Certification, Field Procedures, Legal Aspects, and Background Material. EPA Publication No. EPA–340/1–75–007. April 1975

2. Wohlschlegel, P. and D. E. Wagoner. Guideline for Development of a Quality Assurance Program: Volume IX—Visual Determination of Opacity Emissions From Stationary Sources. EPA Publication No. EPA–650/4–74–005–i. November 1975.

FUGITIVE OR SMOKE EMISSION INSPECTION
OUTDOOR LOCATION

Company _____	Observer _____
Location _____	Affiliation _____
Company representative _____	Date _____
Sky Conditions _____	Wind direction _____
Precipitation _____	Wind speed _____
Industry _____	Process unit _____

Sketch process unit; indicate observer position relative to source and sun; indicate potential emission points and/or actual emission points.

OBSERVATIONS

	Clock time	Observation period duration, min:sec	Accumulated emission time, min:sec
Begin Observation	_____		
	_____	_____	_____
	_____	_____	_____
	_____	_____	_____
	_____	_____	_____
	_____	_____	_____
	_____	_____	_____
	_____	_____	_____
	_____	_____	_____
	_____	_____	_____
	_____	_____	_____
End observation	_____		

Figure 22-1

Fugitive Emission Inspection Indoor Location Table

FUGITIVE EMISSION INSPECTION
INDOOR LOCATION

Company _____ Observer _____

Location _____ Affiliation _____

Company Representative _____ Date _____

Industry _____ Process unit _____

Light type (fluorescent, incandescent, natural _____

Light location (overhead, behind observer, etc.) _____

Illuminance (lux or footcandles) _____

Sketch process unit; indicate observer position relative to source; indicate potential emission points and/or actual emission points.

OBSERVATIONS	Clock time	Observation period duration, min:sec	Accumulated emission, time, min:sec
Beginning observation	_____		
	_____	_____	_____
	_____	_____	_____
	_____	_____	_____
	_____	_____	_____
End observation	_____	_____	_____

Figure 22–2

METHOD 23—DETERMINATION OF POLYCHLORINATED DIBENZO-P-DIOXINS AND POLYCHLORINATED DIBENZOFURANS FROM STATIONARY SOURCES

1. Applicability and Principle

1.1 Applicability. This method is applicable to the determination of polychlorinated dibenzo-p-dioxins (PCDD's) and polychlorinated dibenzofurans (PCDF's) from stationary sources.

1.2 Principle. A sample is withdrawn from the gas stream isokinetically and collected in the sample probe, on a glass fiber filter, and on a packed column of adsorbent material. The sample cannot be separated into a particle vapor fraction. The PCDD's and PCDF's are extracted from the sample, separated by high resolution gas chromatography, and measured by high resolution mass spectrometry.

2. Apparatus

2.1 Sampling. A schematic of the sampling train used in this method is shown in Figure 23–1. Sealing greases may not be used

in assembling the train. The train is identical to that described in section 2.1 of Method 5 of this appendix with the following additions:

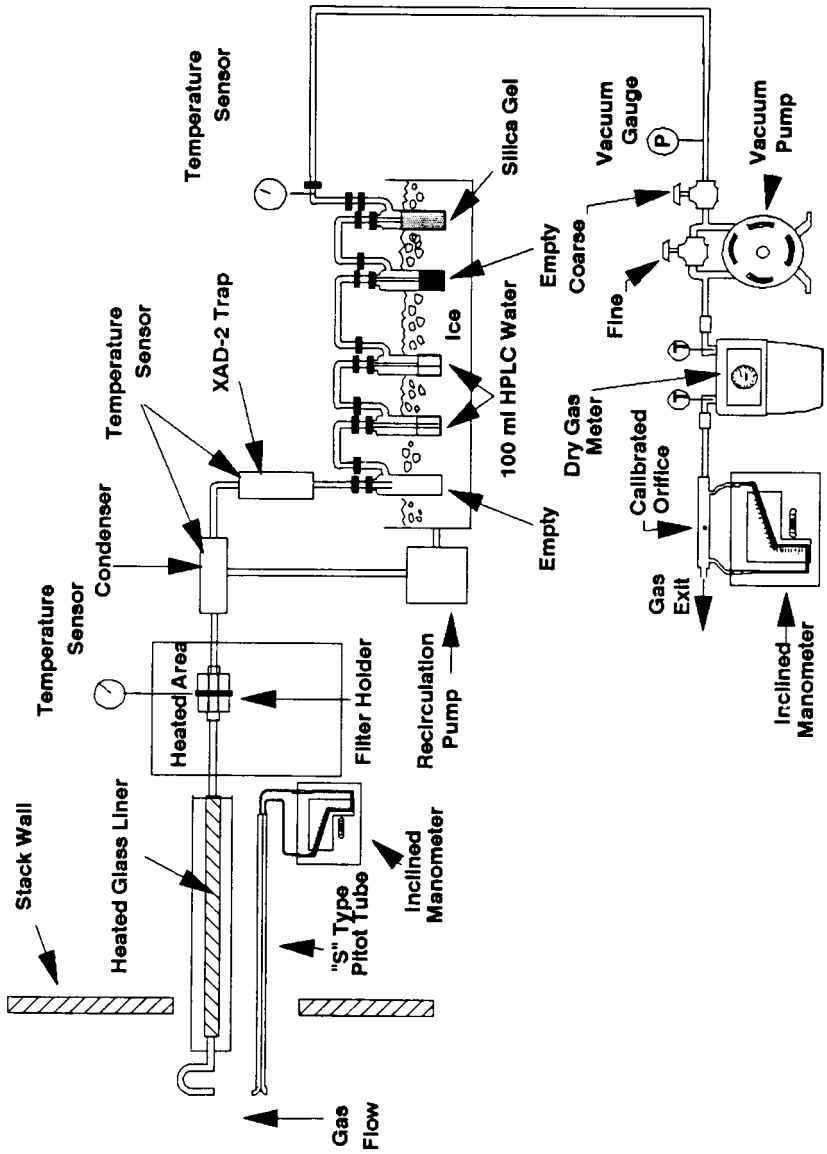

Figure 23.1 Sampling train

2.1.1 Nozzle. The nozzle shall be made of nickel, nickel-plated stainless steel, quartz, or borosilicate glass.

2.1.2 Sample Transfer Lines. The sample transfer lines, if needed, shall be heat traced, heavy walled TFE (½ in. OD with ⅛ in. wall) with connecting fittings that are capable of

forming leak-free, vacuum-tight connections without using sealing greases. The line shall be as short as possible and must be maintained at 120 °C.

2.1.1 Filter Support. Teflon or Teflon-coated wire.

2.1.2 Condenser. Glass, coil type with compatible fittings. A schematic diagram is shown in Figure 23–2.

2.1.3 Water Bath. Thermostatically controlled to maintain the gas temperature exiting the condenser at <20 °C (68 °F).

2.1.4 Adsorbent Module. Glass container to hold the solid adsorbent. A shematic diagram is shown in Figure 23–2. Other physical configurations of the resin trap/condenser assembly are acceptable. The connecting fittings shall form leak-free, vacuum tight seals. No sealant greases shall be used in the sampling train. A coarse glass frit is included to retain the adsorbent.

2.2 Sample Recovery.

2.2.1 Fitting Caps. Ground glass, Teflon tape, or aluminum foil (Section 2.2.6) to cap off the sample exposed sections of the train.

2.2.2 Wash Bottles. Teflon, 500-ml.

2.2.3 Probe-Liner Probe-Nozzle, and Filter-Holder Brushes. Inert bristle brushes with precleaned stainless steel or Teflon handles. The probe brush shall have extensions of stainless steel or Teflon, at least as long as the probe. The brushes shall be properly sized and shaped to brush out the nozzle, probe liner, and transfer line, if used.

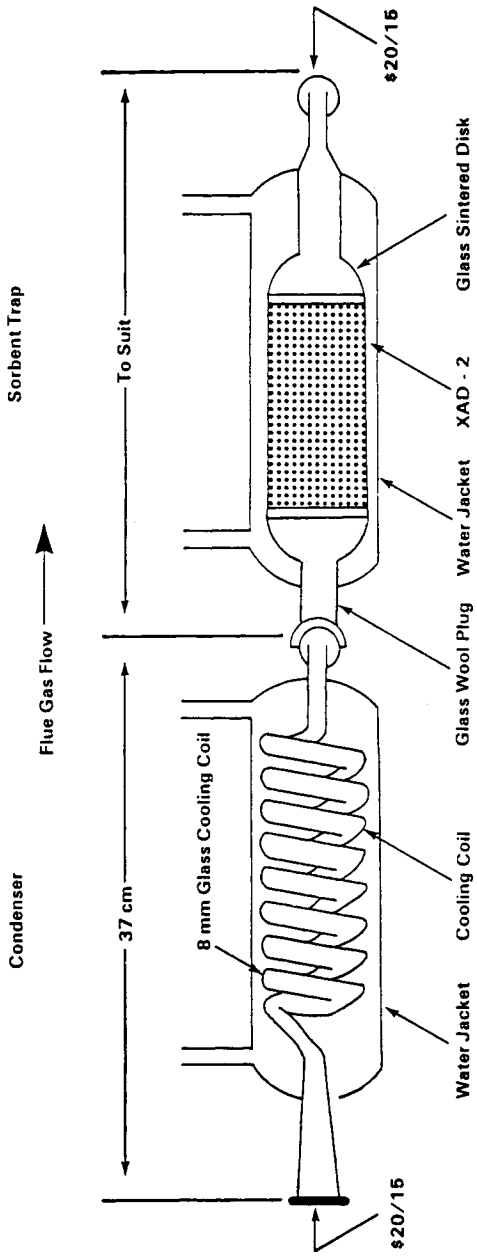

Figure 23.2. Condenser and adsorbent trap

2.2.4 Filter Storage Container. Sealed filter holder, wide-mouth amber glass jar with Teflon-lined cap, or glass petri dish.

2.2.5 Balance. Triple beam.

2.2.6 Aluminum Foil. Heavy duty, hexane-rinsed.

2.2.7 Metal Storage Container. Air tight container to store silica gel.

2.2.8 Graduated Cylinder. Glass, 250-ml with 2-ml graduation.

2.2.9 Glass Sample Storage Container. Amber glass bottle for sample glassware washes, 500- or 1000-ml, with leak free Teflon-lined caps.

2.3 Analysis.

2.3.1 Sample Container. 125- and 250-ml flint glass bottles with Teflon-lined caps.

2.3.2 Test Tube. Glass.

2.3.3 Soxhlet Extraction Apparatus. Capable of holding 43 x 123 mm extraction thimbles.

2.3.4 Extraction Thimble. Glass, precleaned cellulosic, or glass fiber.

2.3.5 Pasteur Pipettes. For preparing liquid chromatographic columns.

2.3.6 Reacti-vials. Amber glass, 2-ml, silanized prior to use.

2.3.7 Rotary Evaporator. Buchi/Brinkman RF–121 or equivalent.

2.3.8 Nitrogen Evaporative Concentrator. N-Evap Analytical Evaporator Model III or equivalent.

2.3.9 Separatory Funnels. Glass, 2-liter.

2.3.10 Gas Chromatograph. Consisting of the following components:

2.3.10.1 Oven. Capable of maintaining the separation column at the proper operating temperature ± °C and performing programmed increases in temperature at rates of at least 40 °C/min.

2.3.10.2 Temperature Gauge. To monitor column oven, detector, and exhaust temperatures ±1 °C.

2.3.10.3 Flow System. Gas metering system to measure sample, fuel, combustion gas, and carrier gas flows.

2.3.10.4 Capillary Columns. A fused silica column, 60 × 0.25 mm inside diameter (ID), coated with DB–5 and a fused silica column, 30 m × 0.25 mm ID coated with DB–225. Other column systems may be used provided that the user is able to demonstrate using calibration and performance checks that the column system is able to meet the specifications of section 6.1.2.2.

2.3.11 Mass Spectrometer. Capable of routine operation at a resolution of 1:10000 with a stability of ±5 ppm.

2.3.12 Data System. Compatible with the mass spectrometer and capable of monitoring at least five groups of 25 ions.

2.3.13 Analytical Balance. To measure within 0.1 mg.

3. Reagents

3.1 Sampling.

3.1.1 Filters. Glass fiber filters, without organic binder, exhibiting at least 99.95 percent efficiency (<0.05 percent penetration) on 0.3-micron dioctyl phthalate smoke particles. The filter efficiency test shall be conducted in accordance with ASTM Standard Method D 2986–71 (Reapproved 1978) (incorporated by reference—see §60.17).

3.1.1.1 Precleaning. All filters shall be cleaned before their initial use. Place a glass extraction thimble and 1 g of silica gel and a plug of glass wool into a Soxhlet apparatus, charge the apparatus with toluene, and reflux for a minimum of 3 hours. Remove the toluene and discard it, but retain the silica gel. Place no more than 50 filters in the thimble onto the silica gel bed and top with the cleaned glass wool. Charge the Soxhlet with toluene and reflux for 16 hours. After extraction, allow the Soxhlet to cool, remove the filters, and dry them under a clean N_2 stream. Store the filters in a glass petri dish sealed with Teflon tape.

3.1.2 Adsorbent Resin. Amberlite XAD–2 resin. Thoroughly cleaned before initial use.

3.1.2.1 Cleaning Procedure. This procedure may be carried out in a giant Soxhlet extractor. An all-glass filter thimble containing an extra-course frit is used for extraction of XAD–2. The frit is recessed 10–15 mm above a crenelated ring at the bottom of the thimble to facilitate drainage. The resin must be carefully retained in the extractor cup with a glass wool plug and a stainless steel ring because it floats on methylene chloride. This process involves sequential extraction in the following order.

Solvent	Procedure
Water	Initial rinse: Place resin in a beaker, rinse once with water, and discard. Fill with water a second time, let stand overnight, and discard.
Water	Extract with water for 8 hours.
Methanol	Extract for 22 hours.
Methylene Chloride	Extract for 22 hours.
Toluene	Extract for 22 hours.

3.1.2.2 Drying.

3.1.2.2.1 Drying Column. Pyrex pipe, 10.2 cm ID by 0.6 m long, with suitable retainers.

3.1.2.2.2 Procedure. The adsorbent must be dried with clean inert gas. Liquid nitrogen from a standard commercial liquid nitrogen cylinder has proven to be a reliable source of large volumes of gas free from organic contaminants. Connect the liquid nitrogen cylinder to the column by a length of cleaned copper tubing, 0.95 cm ID, coiled to pass through a heat source. A convenient heat source is a water-bath heated from a steam line. The final nitrogen temperature should only be warm to the touch and not over 40 °C. Continue flowing nitrogen through the adsorbent until all the residual solvent is removed. The flow rate should be sufficient to gently agitate the particles but not so excessive as the cause the particles to fracture.

3.1.2.3 Quality Control Check. The adsorbent must be checked for residual toluene.

3.1.2.3.1 Extraction. Weigh 1.0 g sample of dried resin into a small vial, add 3 ml of toluene, cap the vial, and shake it well.

3.1.2.3.2 Analysis. Inject a 2 µl sample of the extract into a gas chromatograph operated under the following conditions:

Column: 6 ft × ⅛ in stainless steel containing 10 percent OV–101 on 100/120 Supelcoport.

Carrier Gas: Helium at a rate of 30 ml/min.

Detector: Flame ionization detector operated at a sensitivity of 4×10^{-11} A/mV.

Injection Port Temperature: 250 °C.

Detector Temperature: 305 °C.

Oven Temperature: 30 °C for 4 min; programmed to rise at 40 °C/min until it reaches 250 °C; return to 30 °C after 17 minutes.

Compare the results of the analysis to the results from the reference solution. Prepare the reference solution by injection 2.5 µl of methylene chloride into 100 ml of toluene. This corresponds to 100 µg of methylene chloride per g of adsorbent. The maximum acceptable concentration is 1000 µg/g of adsorbent. If the adsorbent exceeds this level, drying must be continued until the excess methylene chloride is removed.

3.1.2.4 Storage. The adsorbent must be used within 4 weeks of cleaning. After cleaning, it may be stored in a wide mouth amber glass container with a Teflon-lined cap or placed in one of the glass adsorbent modules tightly sealed with glass stoppers. If precleaned adsorbent is purchased in sealed containers, it must be used within 4 weeks after the seal is broken.

3.1.3 Glass Wool. Cleaned by sequential immersion in three aliquots of methylene chloride, dried in a 110 °C oven, and stored in a methylene chloride-washed glass jar with a Teflon-lined screw cap.

3.1.4 Water. Deionized distilled and stored in a methylene chloride-rinsed glass container with a Teflon-lined screw cap.

3.1.5 Silica Gel. Indicating type, 6 to 16 mesh. If previously used, dry at 175 °C (350 °F) for two hours. New silica gel may be used as received. Alternately other types of desiccants (equivalent or better) may be used, subject to the approval of the Administrator.

3.1.6 Chromic Acid Cleaning Solution. Dissolve 20 g of sodium dichromate in 15 ml of water, and then carefully add 400 ml of concentrated sulfuric acid.

3.2 Sample Recovery.

3.2.2 Acetone. Pesticide quality.

3.2.2 Methylene Chloride. Pesticide qualtity.

3.2.3 Toluene. Pesticide quality.

3.3 Analysis.

3.3.1 Potassium Hydroxide. ACS grade, 2-percent (weight/volume) in water.

3.3.2 Sodium Sulfate. Granulated, reagent grade. Purify prior to use by rinsing with methylene chloride and oven drying. Store the cleaned material in a glass container with a Teflon-lined screw cap.

3.3.3 Sulfuric Acid. Reagent grade.

3.3.4 Sodium Hydroxide. 1.0 N. Weigh 40 g of sodium hydroxide into a 1-liter volumetric flask. Dilute to 1 liter with water.

3.3.5 Hexane. Pesticide grade.

3.3.6 Methylene Chloride. Pesticide grade.

3.3.7 Benzene. Pesticide Grade.

3.3.8 Ethyl Acetate.

3.3.9 Methanol. Pesticide Grade.

3.3.10 Toluene. Pesticide Grade.

3.3.11 Nonane. Pesticide Grade.

3.3.12 Cyclohexane. Pesticide Grade.

3.3.13 Basic Alumina. Activity grade 1, 100–200 mesh. Prior to use, activate the alumina by heating for 16 hours at 130 °C before use. Store in a desiccator. Pre-activated alumina may be purchased from a supplier and may be used as received.

3.3.14 Silica Gel. Bio-Sil A, 100–200 mesh. Prior to use, activate the silica gel by heating for at least 30 minutes at 180 °C. After cooling, rinse the silica gel sequentially with methanol and methylene chloride. Heat the rinsed silica gel at 50 °C for 10 minutes, then increase the temperature gradually to 180 °C over 25 minutes and maintain it at this temperature for 90 minutes. Cool at room temperature and store in a glass container with a Teflon-lined screw cap.

3.3.15 Silica Gel Impregnated with Sulfuric Acid. Combine 100 g of silica gel with 44 g of concentrated sulfuric acid in a screw capped glass bottle and agitate thoroughly. Disperse the solids with a stirring rod until a uniform mixture is obtained. Store the mixture in a glass container with a Teflon-lined screw cap.

3.3.16 Silica Gel Impregnated with Sodium Hydroxide. Combine 39 g of 1 N sodium hydroxide with 100 g of silica gel in a screw capped glass bottle and agitate thoroughly. Disperse solids with a stirring rod until a uniform mixture is obtained. Store the mixture in glass container with a Teflon-lined screw cap.

3.3.17 Carbon/Celite. Combine 10.7 g of AX–21 carbon with 124 g of Celite 545 in a 250-ml glass bottle with a Teflon-lined screw cap. Agitate the mixture thoroughly until a uniform mixture is obtained. Store in the glass container.

3.3.18 Nitrogen. Ultra high purity.

3.3.19 Hydrogen. Ultra high purity.

3.3.20 Internal Standard Solution. Prepare a stock standard solution containing the isotopically labelled PCDD's and PCDF's at the concentrations shown in Table 1 under the heading ''Internal Standards'' in 10 ml of nonane.

3.3.21 Surrogate Standard Solution. Prepare a stock standard solution containing the isotopically labelled PCDD's and PCDF's at the concentrations shown in Table 1 under the heading ''Surrogate Standards'' in 10 ml of nonane.

3.3.22 Recovery Standard Solution. Prepare a stock standard solution containing the isotopically labelled PCDD's and PCDF's

at the concentrations shown in Table 1 under the heading ''Recovery Standards'' in 10 ml of nonane.

4. Procedure

4.1 Sampling. The complexity of this method is such that, in order to obtain reliable results, testers should be trained and experienced with the test procedures.

4.1.1 Pretest Preparation.

4.1.1.1 Cleaning Glassware. All glass components of the train upstream of and including the adsorbent module, shall be cleaned as described in section 3A of the ''Manual of Analytical Methods for the Analysis of Pesticides in Human and Environmental Samples.'' Special care shall be devoted to the removal of residual silicone grease sealants on ground glass connections of used glassware. Any residue shall be removed by soaking the glassware for several hours in a chromic acid cleaning solution prior to cleaning as described above.

4.1.1.2 Adsorbent Trap. The traps must be loaded in a clean area to avoid contamination. They may not be loaded in the field. Fill a trap with 20 to 40 g of XAD–2. Follow the XAD–2 with glass wool and tightly cap both ends of the trap. Add 100 µl of the surrogate standard solution (section 3.3.21) to each trap.

4.1.1.3 Sample Train. It is suggested that all components be maintained according to the procedure described in APTD–0576.

4.1.1.4 Silica Gel. Weigh several 200 to 300 g portions of silica gel in an air tight container to the nearest 0.5 g. Record the total weight of the silica gel plus container, on each container. As an alternative, the silica gel may be weighed directly in its impinger or sampling holder just prior to sampling.

4.1.1.5 Filter. Check each filter against light for irregularities and flaws or pinhole leaks. Pack the filters flat in a clean glass container.

4.1.2 Preliminary Determinations. Same as section 4.1.2 of Method 5.

4.1.3 Preparation of Collection Train.

4.1.3.1 During preparation and assembly of the sampling train, keep all train openings where contamination can enter, sealed until just prior to assembly or until sampling is about to begin.

NOTE: Do not use sealant grease in assembling the train.

4.1.3.2 Place approximately 100 ml of water in the second and third impingers, leave the first and fourth impingers empty, and transfer approximately 200 to 300 g of preweighed silica gel from its container to the fifth impinger.

4.1.3.3 Place the silica gel container in a clean place for later use in the sample recovery. Alternatively, the weight of the silica gel plus impinger may be determined to the nearest 0.5 g and recorded.

4.1.3.4 Assemble the train as shown in Figure 23–1.

4.1.3.5 Turn on the adsorbent module and condenser coil recirculating pump and begin monitoring the adsorbent module gas entry temperature. Ensure proper sorbent temperature gas entry temperature before proceeding and before sampling is initiated. It is extremely important that the XAD–2 adsorbent resin temperature never exceed 50 °C because thermal decomposition will occur. During testing, the XAD–2 temperature must not exceed 20 °C for efficient capture of the PCDD's and PCDF's.

4.1.4 Leak-Check Procedure. Same as Method 5, section 4.1.4.

4.1.5 Sample Train Operation. Same as Method 5, section 4.1.5.

4.2 Sample Recovery. Proper cleanup procedure begins as soon as the probe is removed from the stack at the end of the sampling period. Seal the nozzle end of the sampling probe with Teflon tape or aluminum foil.

When the probe can be safely handled, wipe off all external particulate matter near the tip of the probe. Remove the probe from the train and close off both ends with aluminum foil. Seal off the inlet to the train with Teflon tape, a ground glass cap, or aluminum foil.

Transfer the probe and impinger assembly to the cleanup area. This area shall be clean and enclosed so that the chances of losing or contaminating the sample are minimized. Smoking, which could contaminate the sample, shall not be allowed in the cleanup area.

Inspect the train prior to and during disassembly and note any abnormal conditions, e.g., broken filters, colored impinger liquid, etc. Treat the samples as follows:

4.2.1 Container No. 1. Either seal the filter holder or carefully remove the filter from the filter holder and place it in its identified container. Use a pair of cleaned tweezers to handle the filter. If it is necessary to fold the filter, do so such that the particulate cake is inside the fold. Carefully transfer to the container any particulate matter and filter fibers which adhere to the filter holder gasket, by using a dry inert bristle brush and a sharp-edged blade. Seal the container.

4.2.2 Adsorbent Module. Remove the module from the train, tightly cap both ends, label it, cover with aluminum foil, and store it on ice for transport to the laboratory.

4.2.3 Container No. 2. Quantitatively recover material deposited in the nozzle, probe transfer lines, the front half of the filter holder, and the cyclone, if used, first, by brushing while rinsing three times each with acetone and then, by rinsing the probe three times with methylene chloride. Collect all the rinses in Container No. 2.

Rinse the back half of the filter holder three times with acetone. Rinse the connecting line between the filter and the condenser three times with acetone. Soak the connecting line with three separate portions of methylene chloride for 5 minutes each. If using a separate condenser and adsorbent trap, rinse the condenser in the same manner as the connecting line. Collect all the rinses in Container No. 2 and mark the level of the liquid on the container.

4.2.4 Container No. 3. Repeat the methylene chloride-rinsing described in Section 4.2.3 using toluene as the rinse solvent. Collect the rinses in Container No. 3 and mark the level of the liquid on the container.

4.2.5 Impinger Water. Measure the liquid in the first three impingers to within ±1 ml by using a graduated cylinder or by weighing it to within ±0.5 g by using a balance. Record the volume or weight of liquid present. This information is required to calculate the moisture content of the effluent gas.

Discard the liquid after measuring and recording the volume or weight.

4.2.7 Silica Gel. Note the color of the indicating silica gel to determine if it has been completely spent and make a mention of its condition. Transfer the silica gel from the fifth impinger to its original container and seal.

5. Analysis

All glassware shall be cleaned as described in section 3A of the ''Manual of Analytical Methods for the Analysis of Pesticides in Human and Environmental Samples.'' All samples must be extracted within 30 days of collection and analyzed within 45 days of extraction.

5.1 Sample Extraction.

5.1.1 Extraction System. Place an extraction thimble (section 2.3.4), 1 g of silica gel, and a plug of glass wool into the Soxhlet apparatus, charge the apparatus with toluene, and reflux for a minimum of 3 hours. Remove the toluene and discard it, but retain the silica gel. Remove the extraction thimble from the extraction system and place it in a glass beaker to catch the solvent rinses.

5.1.2 Container No. 1 (Filter). Transfer the contents directly to the glass thimble of the extraction system and extract them simultaneously with the XAD–2 resin.

5.1.3 Adsorbent Cartridge. Suspend the adsorbent module directly over the extraction thimble in the beaker (See section 5.1.1). The glass frit of the module should be in the up position. Using a Teflon squeeze bottle containing toluene, flush the XAD–2 into the thimble onto the bed of cleaned silica gel. Thoroughly rinse the glass module catching the rinsings in the beaker containing the thimble. If the resin is wet, effective extraction can be accomplished by loosely packing the resin in the thimble. Add the XAD–2 glass wool plug into the thimble.

5.1.4 Container No. 2 (Acetone and Methylene Chloride). Concentrate the sample to a volume of about 1–5 ml using the rotary evaporator apparatus, at a temperature of less than 37 °C. Rinse the sample container three times with small portions of methylene chloride and add these to the concentrated solution and concentrate further to near dryness. This residue contains particulate matter removed in the rinse of the train probe and nozzle. Add the concentrate to the filter and the XAD–2 resin in the Soxhlet apparatus described in section 5.1.1.

5.1.5 Extraction. Add 100 µl of the internal standard solution (Section 3.3.20) to the extraction thimble containing the contents of the adsorbent cartridge, the contents of Container No. 1, and the concentrate from section 5.1.4. Cover the contents of the extraction thimble with the cleaned glass wool plug to prevent the XAD–2 resin from floating into the solvent reservoir of the extractor. Place the thimble in the extractor, and add the toluene contained in the beaker to the solvent reservoir. Pour additional toluene to fill the reservoir approximately 2/3 full. Add Teflon boiling chips and assemble the apparatus. Adjust the heat source to cause the extractor to cycle three times per hour. Extract the sample for 16 hours. After extraction, allow the Soxhlet to cool. Transfer the toluene extract and three 10-ml rinses to the rotary evaporator. Concentrate the extract to approximately 10 ml. At this point the analyst may choose to split the sample in half. If so, split the sample, store one half for future use, and analyze the other according to the procedures in sections 5.2 and 5.3. In either case, use a nitrogen evaporative concentrator to reduce the volume of the sample being analyzed to near dryness. Dissolve the residue in 5 ml of hexane.

5.1.6 Container No. 3 (Toluene Rinse). Add 100 µl of the Internal Standard solution (section 3.3.2) to the contents of the container. Concentrate the sample to a volume of about 1–5 ml using the rotary evaporator apparatus at a temperature of less than 37 °C. Rinse the sample container apparatus at a temperature of less than 37 °C. Rinse the sample container three times with small portions of toluene and add these to the concentrated solution and concentrate further to near dryness. Analyze the extract separately according to the procedures in sections 5.2 and 5.3, but concentrate the solution in a rotary evaporator apparatus rather than a nitrogen evaporative concentrator.

5.2 Sample Cleanup and Fractionation.

5.2.1 Silica Gel Column. Pack one end of a glass column, 20 mm x 230 mm, with glass wool. Add in sequence, 1 g silica gel, 2 g of sodium hydroxide impregnated silica gel, 1 g silica gel, 4 g of acid-modified silica gel, and 1 g of silica gel. Wash the column with 30 ml

of hexane and discard it. Add the sample extract, dissolved in 5 ml of hexane to the column with two additional 5-ml rinses. Elute the column with an additional 90 ml of hexane and retain the entire eluate. Concentrate this solution to a volume of about 1 ml using the nitrogen evaporative concentrator (section 2.3.7).

5.2.2 Basic Alumina Column. Shorten a 25-ml disposable Pasteur pipette to about 16 ml. Pack the lower section with glass wool and 12 g of basic alumina. Transfer the concentrated extract from the silica gel column to the top of the basic alumina column and elute the column sequentially with 120 ml of 0.5 percent methylene chloride in hexane followed by 120 ml of 35 percent methylene chloride in hexane. Discard the first 120 ml of eluate. Collect the second 120 ml of eluate and concentrate it to about 0.5 ml using the nitrogen evaporative concentrator.

5.2.3 AX–21 Carbon/Celite 545 Column. Remove the botton 0.5 in. from the tip of a 9-ml disposable Pasteur pipette. Insert a glass fiber filter disk in the top of the pipette 2.5 cm from the constriction. Add sufficient carbon/celite mixture to form a 2 cm column. Top with a glass wool plug. In some cases AX–21 carbon fines may wash through the glass wool plug and enter the sample. This may be prevented by adding a celite plug to the exit end of the column. Rinse the column in sequence with 2 ml of 50 percent benzene in ethyl acetate, 1 ml of 50 percent methylene chloride in cyclohexane, and 2 ml of hexane. Discard these rinses. Transfer the concentrate in 1 ml of hexane from the basic alumina column to the carbon/celite column along with 1 ml of hexane rinse. Elute the column sequentially with 2 ml of 50 percent methylene chloride in hexane and 2 ml of 50 percent benzene in ethyl acetate and discard these eluates. Invert the column and elute in the reverse direction with 13 ml of toluene. Collect this eluate. Concentrate the eluate in a rotary evaporator at 50 °C to about 1 ml. Transfer the concentrate to a Reacti-vial using a toluene rinse and concentrate to a volume of 200 µl using a stream of N_2. Store extracts at room temperature, shielded from light, until the analysis is performed.

5.3 Analysis. Analyze the sample with a gas chromatograph coupled to a mass spectrometer (GC/MS) using the instrumental parameters in sections 5.3.1 and 5.3.2. Immediately prior to analysis, add a 20 µl aliquot of the Recovery Standard solution from Table 1 to each sample. A 2 µl aliquot of the extract is injected into the GC. Sample extracts are first analyzed using the DB–5 capillary column to determine the concentration of each isomer of PCDD's and PCDF's (tetra-through octa-). If tetra-chlorinated dibenzofurans are detected in this analysis, then analyze another aliquot of the sample in a separate run, using the DB–225 column to measure the 2,3,7,8 tetra-chloro dibenzofuran isomer. Other column systems may be used, provided that the user is able to demonstrate using calibration and performance checks that the column system is able to meet the specifications of section 6.1.2.2.

5.3.1 Gas Chromatograph Operating Conditions.

5.3.1.1 Injector. Configured for capillary column, splitless, 250 °C.

5.3.1.2 Carrier Gas. Helium, 1–2 ml/min.

5.3.1.3 Oven. Initially at 150 °C. Raise by at least 40 °C/min to 190 °C and then at 3 °C/min up to 300 °C.

5.3.2 High Resolution Mass Spectrometer.

5.3.2.1 Resolution. 10000 m/e.

5.3.2.2 Ionization Mode. Electron impact.

5.3.2.3 Source Temperature 250 °C.

5.3.2.4 Monitoring Mode. Selected ion monitoring. A list of the various ions to be monitored is summarized in Table 3.

5.3.2.5 Identification Criteria. The following identification criteria shall be used for the characterization of polychlorinated dibenzodioxins and dibenzofurans.

1. The integrated ion-abundance ratio (M/M+2 or M+2/M+4) shall be within 15 percent of the theoretical value. The acceptable ion-abundance ratio ranges for the identification of chlorine-containing compounds are given in Table 4.

2. The retention time for the analytes must be within 3 seconds of the corresponding ^{13}C-labeled internal standard, surrogate or alternate standard.

3. The monitored ions, shown in Table 3 for a given analyte, shall reach their maximum within 2 seconds of each other.

4. The identification of specific isomers that do not have corresponding ^{13}C-labeled standards is done by comparison of the relative retention time (RRT) of the analyte to the nearest internal standard retention time with reference (i.e., within 0.005 RRT units) to the comparable RRT's found in the continuing calibration.

5. The signal to noise ratio for all monitored ions must be greater than 2.5.

6. The confirmation of 2, 3, 7, 8–TCDD and 2, 3, 7, 8–TCDF shall satisfy all of the above identification criteria.

7. For the identification of PCDF's, no signal may be found in the corresponding PCDPE channels.

5.3.2.6 Quantification. The peak areas for the two ions monitored for each analyte are summed to yield the total response for each analyte. Each internal standard is used to quantify the indigenous PCDD's or PCDF's in its homologous series. For example, the $^{13}C_{12}$–2,3,7,8-tetra chlorinated dibenzodioxin is used to calculate the concentrations of all other tetra chlorinated isomers. Recoveries of the tetra- and penta- internal standards are calculated using the $^{13}C_{12}$–1,2,3,4–TCDD. Recoveries of the hexa- through octa- internal standards are calculated using $^{13}C_{12}$–

1,2,3,7,8,9–HxCDD. Recoveries of the surrogate standards are calculated using the corresponding homolog from the internal standard.

6. Calibration

Same as Method 5 with the following additions.

6.1 GC/MS System.

6.1.1 Initial Calibration. Calibrate the GC/MS system using the set of five standards shown in Table 2. The relative standard deviation for the mean response factor from each of the unlabeled analytes (Table 2) and of the internal, surrogate, and alternate standards shall be less than or equal to the values in Table 5. The signal to noise ratio for the GC signal present in every selected ion current profile shall be greater than or equal to 2.5. The ion abundance ratios shall be within the control limits in Table 4.

6.1.2 Daily Performance Check.

6.1.2.1 Calibration Check. Inject on µl of solution Number 3 from Table 2. Calculate the relative response factor (RRF) for each compound and compare each RRF to the corresponding mean RRF obtained during the initial calibration. The analyzer performance is acceptable if the measured RRF's for the labeled and unlabeled compounds for the daily run are within the limits of the mean values shown in Table 5. In addition, the ion-abundance ratios shall be within the allowable control limits shown in Table 4.

6.1.2.2 Column Separation Check. Inject a solution of a mixture of PCDD's and PCDF's that documents resolution between 2,3,7,8–TCDD and other TCDD isomers. Resolution is defined as a valley between peaks that is less than 25 percent of the lower of the two peaks. Identify and record the retention time windows for each homologous series.

Perform a similar resolution check on the confirmation column to document the resolution between 2,3,7,8 TCDF and other TCDF isomers.

6.2 Lock Channels. Set mass spectrometer lock channels as specified in Table 3. Monitor the quality control check channels specified in Table 3 to verify instrument stability during the analysis.

7. Quality Control

7.1 Sampling Train Collection Efficiency Check. Add 100 µl of the surrogate standards in Table 1 to the absorbent cartridge of each train before collecting the field samples.

7.2 Internal Standard Percent Recoveries. A group of nine carbon labeled PCDD's and PCDF's representing, the tetra-through octachlorinated homologues, is added to every sample prior to extraction. The role of the internal standards is to quantify the native PCDD's and PCDF's present in the sample as well as to determine the overall method efficiency. Recoveries of the internal standards must be between 40 to 130 percent for the tetra-through hexachlorinated compounds while the range is 25 to 130 percent for the higher hepta- and octachlorinated homologues.

7.3 Surrogate Recoveries. The five surrogate compounds in Table 2 are added to the resin in the adsorbent sampling cartridge before the sample is collected. The surrogate recoveries are measured relative to the internal standards and are a measure of collection efficiency. They are not used to measure native PCDD's and PCDF's. All recoveries shall be between 70 and 130 percent. Poor recoveries for all the surrogates may be an indication of breakthrough in the sampling train. If the recovery of all standards is below 70 percent, the sampling runs must be repeated. As an alternative, the sampling runs do not have to be repeated if the final results are divided by the fraction of surrogate recovery. Poor recoveries of isolated surrogate compounds should not be grounds for rejecting an entire set of the samples.

7.4 Toluene QA Rinse. Report the results of the toluene QA rinse separately from the total sample catch. Do not add it to the total sample.

8. Quality Assurance

8.1 Applicability. When the method is used to analyze samples to demonstrate compliance with a source emission regulation, an audit sample must be analyzed, subject to availability.

8.2 Audit Procedure. Analyze an audit sample with each set of compliance samples. The audit sample contains tetra through octa isomers of PCDD and PCDF. Concurrently, analyze the audit sample and a set of compliance samples in the same manner to evaluate the technique of the analyst and the standards preparation. The same analyst, analytical reagents, and analytical system shall be used both for the compliance samples and the EPA audit sample.

8.3 Audit Sample Availability. Audit samples will be supplied only to enforcement agencies for compliance tests. The availability of audit samples may be obtained by writing: Source Test Audit Coordinator (MD–77B), Quality Assurance Division, Atmospheric Research and Exposure Assessment Laboratory, U.S. Environmental Protection Agency, Research Triangle Park, NC 27711, or by calling the Source Test Audit Coordinator (STAC) at (919) 541–7834. The request for the audit sample must be made at least 30 days prior to the scheduled compliance sample analysis.

8.4 Audit Results. Calculate the audit sample concentration according to the calculation procedure described in the audit instructions included with the audit sample. Fill in the audit sample concentration and the analyst's name on the audit response form included with the audit instructions.

Send one copy to the EPA Regional Office or the appropriate enforcement agency and a second copy to the STAC. The EPA Regional office or the appropriate enforcement agency will report the results of the audit to the laboratory being audited. Include this response with the results of the compliance samples in relevant reports to the EPA Regional Office or the appropriate enforcement agency.

9. Calculations

Same as Method 5, section 6 with the following additions.

9.1 Nomenclature.

A_{ai}=Integrated ion current of the noise at the retention time of the analyte.

A^*_{ci}=Integrated ion current of the two ions characteristic of the internal standard i in the calibration standard.

A_{cij}=Integrated ion current of the two ions characteristic of compound i in the jth calibration standard.

A^*_{cij}=Integrated ion current of the two ions characteristic of the internal standard i in the jth calibration standard.

A_{csi}=Integrated ion current of the two ions characteristic of surrogate compound i in the calibration standard.

A_i=Integrated ion current of the two ions characteristic of compound i in the sample.

A^*_i=Integrated ion current of the two ions characteristic of internal standard i in the sample.

A_{rs}=Integrated ion current of the two ions characteristic of the recovery standard.

A_{si}=Integrated ion current of the two ions characteristic of surrogate compound i in the sample.

C_i=Concentration of PCDD or PCDF i in the sample, pg/M^3.

C_T=Total concentration of PCDD's or PCDF's in the sample, pg/M^3.

m_{ci}=Mass of compound i in the calibration standard injected into the analyzer, pg.

m_{rs}=Mass of recovery standard in the calibration standard injected into the analyzer, pg.

m_{si}=Mass of surrogate compound in the calibration standard, pg.

RRF_i=Relative response factor.

RRF_{rs}=Recovery standard response factor.

RRF_s=Surrogate compound response factor.

9.2 Average Relative Response Factor.

$$RRF_i = \frac{1}{n}\sum_{j=1}^{n}\frac{A_{cij}\, m^*_{ci}}{A^*_{cij}\, m_{ci}} \qquad \text{Eq. 23-1}$$

9.3 Concentration of the PCDD's and PCDF's.

$$C_i = \frac{m_i^* A_i}{A_i^* RRF_i V_{mstd}} \qquad \text{Eq. 23-2}$$

9.4 Recovery Standard Response Factor.

$$RRF_{rs} = \frac{A_{ci}^* m_{rs}}{A_{rs} m_{ci}^*} \qquad \text{Eq. 23-3}$$

9.5 Recovery of Internal Standards (R*).

$$R^* = \frac{A_i^* m_{rs}}{A_{rs} RF_{rs} m_i^*} \times 100\% \qquad \text{Eq. 23-4}$$

9.6 Surrogate Compound Response Factor.

$$RRF_s = \frac{A_{ci}^* m_s}{A_{cis} m_{ci}^*} \qquad \text{Eq. 23-5}$$

9.7 Recovery of Surrogate Compounds (R_s).

$$R_s = \frac{A_s m_i^*}{A_i^* RRF_s m_s} \times 100\% \qquad \text{Eq. 23-6}$$

9.8 Minimum Detectable Limit (MDL).

$$MDL = \frac{2.5\, A_{ai} m_i^*}{A_{ci}^* RRF_i} \qquad \text{Eq. 23-7}$$

9.9 Total Concentration of PCDD's and PCDF's in the Sample.

$$C_{Tr} = \sum_{i=1}^{n} C_i \qquad \text{Eq. 23-8}$$

Any PCDD's or PCDF's that are reported as nondetected (below the MDL) shall be counted as zero for the purpose of calculating the total concentration of PCDD's and PCDF's in the sample.

10. Bibliography

1. American Society of Mechanical Engineers. Sampling for the Determination of Chlorinated Organic Compounds in Stack Emissions. Prepared for U.S. Department of Energy and U.S. Environmental Protection Agency. Washington DC. December 1984. 25 p.

2. American Society of Mechanical Engineers. Analytical Procedures to Assay Stack Effluent Samples and Residual Combustion Products for Polychlorinated Dibenzo-p-Dioxins (PCDD) and Polychlorinated Dibenzofurans (PCDF). Prepared for the U.S. Department of Energy and U.S. Environmental Protection Agency. Washington, DC. December 1984. 23 p.

3. Thompson, J. R. (ed.). Analysis of Pesticide Residues in Human and Environmental Samples. U.S. Environmental Protection Agency. Research Triangle Park, NC. 1974.

4. Triangle Laboratories. Case Study: Analysis of Samples for the Presence of Tetra Through Octachloro-p-Dibenzodioxins and Dibenzofurans. Research Triangle Park, NC. 1988. 26 p.

5. U.S. Environmental Protection Agency. Method 8290—The Analysis of Polychlorinated Dibenzo-p-dioxin and Polychlorinated Dibenzofurans by High-Resolution Gas Chromotography/High-Resolution Mass Spectrometry. In: Test Methods for Evaluating Solid Waste. Washington, DC. SW–846.

TABLE 1—COMPOSITION OF THE SAMPLE FORTIFICATION AND RECOVERY STANDARDS SOLUTIONS

Analyte	Concentration (pg/µl)
Internal Standards:	
$^{13}C_{12}$-2,3,7,8-TCDD	100
$^{13}C_{12}$-1,2,3,7,8-PeCDD	100
$^{13}C_{12}$-1,2,3,6,7,8-HxCDD	100
$^{13}C_{12}$-1,2,3,4,6,7,8-HpCDD	100
$^{13}C_{12}$-OCDD	100
$^{13}C_{12}$-2,3,7,8-TCDF	100
$^{13}C_{12}$-1,2,3,7,8-PeCDF	100
$^{13}C_{12}$-1,2,3,6,7,8-HxCDF	100
$^{13}C_{12}$-1,2,3,4,6,7,8-HpCDF	100
Surrogate Standards:	
$^{37}Cl_4$-2,3,7,8-TCDD	100

TABLE 1—COMPOSITION OF THE SAMPLE FORTIFICATION AND RECOVERY STANDARDS SOLUTIONS—Continued

Analyte	Concentration (pg/µl)
$^{13}C_{12}$-1,2,3,4,7,8-HxCDD	100
$^{13}C_{12}$-2,3,4,7,8-PeCDF	100
$^{13}C_{12}$-1,2,3,4,7,8-HxCDF	100
$^{13}C_{12}$-1,2,3,4,7,8,9-HpCDF	100
Recovery Standards:	
$^{13}C_{12}$-1,2,3,4-TCDD	500
$^{13}C_{12}$-1,2,3,7,8,9-HxCDD	500

TABLE 2—COMPOSITION OF THE INITIAL CALIBRATION SOLUTIONS

Compound	Concentrations (pg/µL)				
	Solution No.				
	1	2	3	4	5
Alternate Standard:					
$^{13}C_{12}$-1,2,3,7,8,9-HxCDF	2.5	5	25	250	500
Recovery Standards:					
$^{13}C_{12}$-1,2,3,4-TCDD	100	100	100	100	100
$^{13}C_{12}$-1,2,3,7,8,9-HxCDD	100	100	100	100	100

TABLE 3—ELEMENTAL COMPOSITIONS AND EXACT MASSES OF THE IONS MONITORED BY HIGH RESOLUTION MASS SPECTROMETRY FOR PCDD'S AND PCDF'S

Descriptor No.	Accurate mass	Ion type	Elemental composition	Analyte
2	292.9825	LOCK	C_7F_{11}	PFK
	303.9016	M	$C_{12}H_4{}^{35}Cl_4O$	TCDF
	305.8987	M+2	$C_{12}H_4{}^{35}Cl^{37}O$	TCDF
	315.9419	M	$^{13}C_{12}H_4{}^{35}Cl_4O$	TCDF (S)
	317.9389	M+2	$^{13}C_{12}H_4{}^{35}Cl_3{}^{37}ClO$	TCDF (S)
	319.8965	M	$C_{12}H_4{}^{35}ClO_2$	TCDD
	321.8936	M+2	$C_{12}H_4{}^{35}Cl_3{}^{37}ClO_2$	TCDD
	327.8847	M	$C_{12}H_4{}^{37}Cl_4O_2$	TCDD (S)
	330.9792	QC	C_7F_{13}	PFK
	331.9368	M	$^{13}C_{12}H_4{}^{35}Cl_4O_2$	TCDD (S)
	333.9339	M+2	$^{13}C_{12}H_4{}^{35}Cl^{37}ClO_2$	TCDD (S)
	339.8597	M+2	$C_{12}H_3{}^{35}Cl_4{}^{37}ClO$	PECDF
	341.8567	M+4	$C_{12}H_3{}^{35}Cl_3{}^{37}Cl_2O$	PeCDF
	351.9000	M+2	$^{13}C_{12}H_3{}^{35}Cl_4{}^{37}ClO$	PeCDF (S)
	353.8970	M+4	$^{13}C_{12}H_3{}^{35}Cl^{3537}Cl_2O$	PeCDF (S)
	355.8546	M+2	$C_{12}H_3{}^{35}Cl_3 37ClO_2$	PeCDD
	357.8516	M+4	$C_{12}H_3{}^{35}Cl_3{}^{37}Cl_2O_2$	PeCDD
	367.8949	M+2	$^{13}C_{12}H_3{}^{35}Cl_4{}^{37}ClO_2$	PeCDD (S)
	369.8919	M+4	$^{13}C_{12}H_3{}^{35}Cl_3{}^{37}\ Cl_2O_2$	PeCDD (S)
	375.8364	M+2	$C_{12}H_4{}^{35}Cl_5{}^{37}ClO$	HxCDPE
	409.7974	M+2	$C_{12}H_3{}^{35}Cl_6{}^{37}ClO$	HpCPDE
3	373.8208	M+2	$C_{12}H_2 35Cl_5{}^{37}ClO$	HxCDF
	375.8178	M+4	$C_{12}H_2{}^{35}Cl_4{}^{37}Cl_2O$	HxCDF
	383.8639	M	$^{13}C_{12}H_2{}^{35}Cl_6O$	HxCDF (S)
	385.8610	M+2	$^{13}C_{12}H_2{}^{35}Cl_5{}^{37}ClO$	HxCDF (S)
	389.8157	M+2	$C_{12}H_2{}^{35}Cl_5{}^{37}ClO_2$	HxCDD
	391.8127	M+4	$C_{12}H_2{}^{35}Cl_4{}^{37}Cl_2O_2$	HxCDD
	392.9760	LOCK	C_9F_{15}	PFK
	401.8559	M+2	$^{13}C_{12}H_2{}^{35}Cl_5{}^{37}ClO_2$	HxCDD (S)
	403.8529	M+4	$^{13}C_{12}H_2{}^{35}Cl_4{}^{37}Cl_2O$	HxCDD (S)
	445.7555	M+4	$C_{12}H_2{}^{35}Cl_6{}^{37}Cl_2O$	OCDPE
	430.9729	QC	C_9F_{17}	PFK
4	407.7818	M+2	$C_{12}H^{35}Cl_6{}^{37}ClO$	HpCDF
	409.7789	M+4	$C_{12}H^{35}Cl_5{}^{37}Cl_2O$	HpCDF

TABLE 3—ELEMENTAL COMPOSITIONS AND EXACT MASSES OF THE IONS MONITORED BY HIGH RESOLUTION MASS SPECTROMETRY FOR PCDD'S AND PCDF'S—Continued

Descriptor No.	Accurate mass	Ion type	Elemental composition	Analyte
	417.8253	M	$^{13}C_{12}H^{35}Cl_7O$	HpCDF (S)
	419.8220	M+2	$^{13}C_{12}H^{35}Cl_6{}^{37}ClO$	HpCDF (S)
	423.7766	M+2	$C_{12}H^{35}Cl_6{}^{37}ClO_2$	HpCDD
	425.7737	M+4	$C_{12}H^{35}Cl_5{}^{37}Cl_2O_2$	HpCDD
	435.8169	M+2	$^{13}C_{12}H^{35}Cl_6{}^{37}ClO_2$	HpCDD (S)
	437.8140	M+4	$^{13}C_{12}H^{35}Cl_5{}^{37}Cl_2O_2$	HpCDD (S)
	479.7165	M+4	$C_{12}H^{35}Cl_7{}^{37}Cl_2O$	NCPDE
	430.9729	LOCK	C_9F_{17}	PFK
	441.7428	M+2	$C_{12}{}^{35}Cl_7{}^{37}ClO$	OCDF
	443.7399	M+4	$C_{12}{}^{35}Cl_6{}^{37}Cl_2O$	OCDF
	457.7377	M+2	$C_{12}{}^{35}Cl_7{}^{37}ClO_2$	OCDD
	459.7348	M+4	$C_{12}{}^{35}Cl_6{}^{37}Cl_2O_2$	OCDD
	469.7779	M+2	$^{13}C_{12}{}^{35}Cl_7{}^{37}ClO_2$	OCDD (S)
	471.7750	M+4	$^{13}C_{12}{}^{35}Cl_6{}^{37}Cl_2O_2$	OCDD (S)
	513.6775	M+4	$C_{12}{}^{35}Cl_8{}^{37}Cl_2O_2$	DCDPE
	442.9728	QC	$C_{10}F_{17}$	PFK

(a) The following nuclidic masses were used:
H = 1.007825
C = 12.000000
^{13}C = 13.003355
F = 18.9984
O = 15.994915
^{35}Cl = 34.968853
^{37}Cl = 36.965903
S = Labeled Standard
QC = Ion selected for monitoring instrument stability during the GC/MS analysis.

TABLE 4—ACCEPTABLE RANGES FOR ION-ABUNDANCE RATIOS OF PCDD'S AND PCDF'S

No. of chlorine atoms	Ion type	Theoretical ratio	Control limits	
			Lower	Upper
4	M/M+2	0.77	0.65	0.89
5	M+2/M+4	1.55	1.32	1.78
6	M+2/M+4	1.24	1.05	1.43
6 [a]	M/M+2	0.51	0.43	0.59
7 [b]	M/M+2	0.44	0.37	0.51
7	M+2/M+4	1.04	0.88	1.20
8	M+2/M+4	0.89	0.76	1.02

[a] Used only for ^{13}C-HxCDF.
[b] Used only for ^{13}C-HpCDF.

TABLE 5—MINIMUM REQUIREMENTS FOR INITIAL AND DAILY CALIBRATION RESPONSE FACTORS

Compound	Relative response factors	
	Initial calibration RSD	Daily calibration % difference
Unlabeled Analytes:		
2,3,7,8-TCDD	25	25
2,3,7,8-TCDF	25	25
1,2,3,7,8-PeCDD	25	25
1,2,3,7,8-PeCDF	25	25
2,3,4,7,8-PeCDF	25	25
1,2,4,5,7,8-HxCDD	25	25
1,2,3,6,7,8-HxCDD	25	25
1,2,3,7,8,9-HxCDD	25	25
1,2,3,4,7,8-HxCDF	25	25
1,2,3,6,7,8-HxCDF	25	25
1,2,3,7,8,9-HxCDF	25	25
2,3,4,6,7,8-HxCDF	25	25
1,2,3,4,6,7,8-HpCDD	25	25
1,2,3,4,6,7,8-HpCDF	25	25
OCDD	25	25

TABLE 5—MINIMUM REQUIREMENTS FOR INITIAL AND DAILY CALIBRATION RESPONSE FACTORS—Continued

Compound	Relative response factors	
	Initial calibration RSD	Daily calibration % difference
OCDF	30	30
Internal Standards:		
$^{13}C_{12}$-2,3,7,8-TCDD	25	25
$^{13}C_{12}$-1,2,3,7,8-PeCDD	30	30
$^{13}C_{12}$-1,2,3,6,7,8-HxCDD	25	25
$^{13}C_{12}$-1,2,3,4,6,7,8-HpCDD	30	30
$^{13}C_{12}$-OCDD	30	30
$^{13}C_{12}$-2,3,7,8-TCDF	30	30
$^{13}C_{12}$-1,2,3,7,8-PeCDF	30	30
$^{13}C_{12}$-1,2,3,6,7,8-HxCDF	30	30
$^{13}C_{12}$-1,2,3,4,6,7,8-HpCDF	30	30
Surrogate Standards:		
$^{37}Cl_4$-2,3,7,8-TCDD	25	25
$^{13}C_{12}$-2,3,4,7,8-PeCDF	25	25
$^{13}C_{12}$-1,2,3,4,7,8-HxCDD	25	25
$^{13}C_{12}$-1,2,3,4,7,8-HxCDF	25	25
$^{13}C_{12}$-1,2,3,4,7,8,9-HpCDF	25	25
Alternate Standard:		
$^{13}C_{12}$-1,2,3,7,8,9-HxCDF	25	25

METHOD 24—DETERMINATION OF VOLATILE MATTER CONTENT, WATER CONTENT, DENSITY, VOLUME SOLIDS, AND WEIGHT SOLIDS OF SURFACE COATINGS

1. *Applicability and Principle*

1.1 Applicability. This method applies to the determination of volatile matter content, water content, density, volume solids, and weight solids of paint, varnish, lacquer, or related surface coatings.

1.2 Principle. Standard methods are used to determine the volatile matter content, water content, density, volume solids, and weight solids of the paint, varnish, lacquer, or related surface coatings.

2. *Applicable Standard Methods*

Use the apparatus, reagents, and procedures specified in the standard methods below:

2.1 ASTM D1475–60 (Reapproved 1980), Standard Test Method for Density of Paint, Varnish, Lacquer, and Related Products (incorporated by reference—see §60.17).

2.2 ASTM D2369–81, Standard Test Method for Volatile Content of Coatings (incorporated by reference—see §60.17).

2.3 ASTM D3792–79, Standard Test Method for Water Content of Water-Reducible Paints by Direct Injection into a Gas Chromatograph (incorporated by reference—see §60.17).

2.4 ASTM D4017–81, Standard Test Method for Water in Paints and Paint Materials by the Karl Fischer Titration Method (incorporated by reference—see §60.17).

2.5 ASTM D4457–85 Standard Test Method for Determination of Dichloromethane and 1,1,1–Trichloroethane in Paints and Coatings by Direct Injection into a Gas Chromatograph (incorporated by reference—see §60.17).

2.6 ASTM D 5403–93 Standard Test Methods for Volatile Content of Radiation Curable Materials (incorporated by reference—see §60.17).

3. *Procedure*

3.1 Multicomponent Coatings. Multicomponent coatings are coatings that are packaged in two or more parts, which are combined before application. Upon combination a coreactant from one part of the coating chemically reacts, at ambient conditions, with a coreactant from another part of the coating. To determine the total volatile content, water content, and density of multicomponent coatings, follow the procedures in section 3.7.

3.2 Non Thin-film Ultraviolet Radiation-cured Coating. To determine volatile content of non thin-film ultraviolet radiation-cured (UV radiation-cured) coatings, follow the procedures in Section 3.9. Determine water content, density and solids content of the UV-cured coatings according to Sections 3.4, 3.5, and 3.6, respectively. The UV-cured coatings are coatings which contain unreacted monomers that are polymerized by exposure to ultraviolet light. To determine if a coating or ink can be classified as a thin-film UV cured coating or ink, use the following equation:

C=F A D Eq. 24–1

Where:

A=Area of substrate, in^2, cm^2.

C=Amount of coating or ink added to the substrate, g.

D=Density of coating or ink, g/in^3 (g/cm^3)

F=Manufacturer's recommended film thickness, in (cm).

If C is less than 0.2 g and A is greater than or equal to 35 in^2 (225 cm^2) then the coating or ink is considered a thin-film UV radiation-cured coating for determining applicability of ASTM D 5403–93.

NOTE: As noted in Section 1.4 of ASTM D 5403–93, this method may not be applicable to radiation curable materials wherein the volatile material is water. For all other coatings not covered by Sections 3.1 or 3.2 analyze as follows:

3.3 Volatile Matter Content. Use the procedure in ASTM D2369–81 (incorporated by reference—see §60.17) to determine the volatile matter content (may include water) of the coating. Record the following information:

W_1=Weight of dish and sample before heating, g.

W_2=Weight of dish and sample after heating, g.

W_3=Sample weight, g.

Run analyses in pairs (duplicate sets) for each coating until the criterion in Section 4.3 is met. Calculate the weight fraction of the volatile matter (W_v) for each analysis as follows:

$$W_v = \frac{W_1 - W_2}{W_3} \qquad \text{Eq. 24-2}$$

Record the arithmetic average ($\bar{W}_v$).

3.4 Water Content. For waterborne (water reducible) coatings only, determine the weight fraction of water (W_W) using either ''Standard Content Method Test for Water of Water-Reducible Paints by Direct Injection into a Gas Chromatograph'' or ''Standard Test Method for Water in Paint and Paint Materials by Karl Fischer Method.'' (These two methods are incorporated by reference—see §60.17.) A waterborne coating is any coating which contains more than 5 percent water by weight in its volatile fraction. Run duplicate sets of determinations until the criterion in Section 4.3 is met. Record the arithmetic average ($\bar{W}_w$).

3.5 Coating Density. Determine the density (D_c, kg/liter) of the surface coating using the procedure in ASTM D1475–60 (Reapproved 1980) (incorporated by reference—see §60.17).

Run duplicate sets of determinations for each coating until the criterion in Section 4.3 is met. Record the arithmetic average ($\bar{D}_c$).

3.6 Solids Content. Determine the volume fraction (V_s) solids of the coating by calculation using the manufacturer's formulation.

3.7 Exempt Solvent Content. Determine the weight fraction of exempt solvents (W_E) by using ASTM Method D4457–85 (incorporated by reference—see §60.17). Run a duplicate set of determinations and record the arithmetic average (W_E)

NOTE: Exempt solvents are defined as those solvents listed in 57 FR 3941, February 3, 1992. Dichloromethane and 1,1,1-trichloroethane are listed exempt solvents and may be used in coatings.

3.8 To determine the total volatile content, water content, and density of multicomponent coatings, use the following procedures:

3.8.1 Prepare about 100 ml of sample by mixing the components in a storage container, such as a glass jar with a screw top or a metal can with a cap. The storage container should be just large enough to hold the mixture. Combine the components (by weight or volume) in the ratio recommended by the manufacturer. Tightly close the container between additions and during mixing to prevent loss of volatile materials. However, most manufacturers mixing instructions are by volume. Because of possible error caused by expansion of the liquid when measuring the volume, it is recommended that the components be combined by weight. When weight is used to combine the components and the manufacturer's recommended ratio is by volume, the density must be determined by section 3.5.

3.8.2 Immediately after mixing, take aliquots from this 100 ml sample for determination of the total volatile content, water content, and density. To determine water content, follow section 3.4. To determine density, follow section 3.5. To determine total volatile content, use the apparatus and reagents described in ASTM D2369–81, sections 3 and 4, respectively (incorporated by reference, and see §60.17) the following procedures:

3.8.2.1 Weigh and record the weight of an aluminum foil weighing dish. Add 31±l of suitable solvent as specified in ASTM D2369–81 to the weighing dish. Using a syringe as specified in ASTM D2369–81, weigh to 1 mg, by difference, a sample of coating into the weighing dish. For coatings believed to have a volatile content less than 40 weight percent, a suitable size is 0.3±0.10 g, but for coatings believed to have a volatile content greater than 40 weight percent, a suitable size is 0.5±0.10 g.

NOTE: If the volatile content determined pursuant to section 5 is not in the range corresponding to the sample size chosen repeat the test with the appropriate sample size. Add the specimen dropwise, shaking (swirling) the dish to disperse the specimen completely in the solvent. If the material forms a lump that cannot be dispersed, discard the specimen and prepare a new one. Similarly, prepare a duplicate. The sample shall stand for a minimum of 1 hour, but no more than 24 hours prior to being oven dried at 110 °C±5 °C. for 1 hour.

3.8.2.2 Heat the aluminum foil dishes containing the dispersed specimens in the forced draft oven for 60 min at 110±5 °C. Caution—provide adequate ventilation, consistent with accepted laboratory practice, to prevent solvent vapors from accumulating to a dangerous level.

3.8.2.3 Remove the dishes from the oven, place immediately in a desiccator, cool to ambient temperature, and weigh to within 1 mg.

3.8.2.4 Run analyses in pairs (duplicate sets) for each coating mixture until the criterion in section 4.3 is met. Calculate W_v following Equation 24–2 and record the arithmetic average.

3.9 UV-cured Coating's Volatile Matter Content. Use the procedure in ASTM D 5403–93 (incorporated by reference—see §60.17) to determine the volatile matter content of the coating except the curing test described in NOTE 2 of ASTM D 5403–93 is required.

4. *Data Validation Procedure*

4.1 Summary. The variety of coatings that may be subject to analysis makes it necessary to verify the ability of the analyst and the analytical procedures to obtain reproducible results for the coatings tested. This is done by running duplicate analyses on each sample tested and comparing results with the within-laboratory precision statements for each parameter. Because of the inherent increased imprecision in the determination of the VOC content of waterborne coatings as the weight percent water increases, measured parameters for waterborne coatings are modified by the appropriate confidence limits based on between-laboratory precision statements.

4.2 Analytical Precision Statements. The within-laboratory and between-laboratory precision statements are given below:

	Within-laboratory	Between-laboratory
Volatile matter content, W_v	1.5 pct W_v.	4.7 pct W_v.
Water content, W_w	2.9 pct W_w.	7.5 pct W_w.
Density, D_c	0.001 kg/liter.	0.002 kg/liter.

4.3 Sample Analysis Criteria. For W_v and W_w, run duplicate analyses until the difference between the two values in a set is less than or equal to the within-laboratory precision statement for that parameter. For D_c run duplicate analyses until each value in a set deviates from the mean of the set by no more than the within-laboratory precision

statement. If after several attempts it is concluded that the ASTM procedures cannot be used for the specific coating with the established within-laboratory precision, the Administrator will assume responsibility for providing the necessary procedures for revising the method or precision statements upon written request to: Director, Emission Standards and Engineering Division, (MD–13) Office of Air Quality Planning and Standards, U.S. Environmental Protection Agency, Research Triangle Park, NC 27711.

4.4 Confidence Limit Calculations for Waterborne Coatings. Based on the between-laboratory precision statements, calculate the confidence limits for waterborne coatings as follows:

To calculate the lower confidence limit, subtract the appropriate between-laboratory precision value from the measured mean value for that parameter. To calculate the upper confidence limit, add the appropriate between-laboratory precision value to the measured mean value for that parameter. For W_v and D_c, use the lower confidence limits, and for W_w, use the upper confidence limit. Because V_s is calculated, there is no adjustment for the parameter.

5. *Calculations*

5.1 Nonaqueous Volatile Matter.

5.1.1 Solvent-borne Coatings.

$$W_o = W_v \qquad \text{Eq. 24–3}$$

Where:

W_o=Weight fraction nonaqueous volatile matter, g/g.

5.1.2 Waterborne Coatings.

$$W_o = W_v - W_w \qquad \text{Eq. 24–4}$$

5.1.3 Coatings Containing Exempt Solvents.

$$W_o = W_v - W_E - W_w \qquad \text{Eq. 24-5}$$

where:

W_E=weight fraction of exempt solvents, g/g.

5.2 Weight Fraction Solids.

$$W_s = 1 - W_v \qquad \text{Eq. 25-5}$$

where:

W_s=weight fraction of solids, g/g.

METHOD 24A—DETERMINATION OF VOLATILE MATTER CONTENT AND DENSITY OF PRINTING INKS AND RELATED COATINGS

1. *Applicability and Principle*

1.1 Applicability. This method applies to the determination of the volatile organic compound (VOC) content and density of solvent-borne (solvent reducible) printing inks or related coatings.

1.2 Principle. Separate procedures are used to determine the VOC weight fraction and density of the coating and the density of the solvent in the coating. The VOC weight fraction is determined by measuring the weight loss of a known sample quantity which has been heated for a specified length of time at a specified temperature. The density of both the coating and solvent are measured by a standard procedure. From this information, the VOC volume fraction is calculated.

2. *Procedure*

2.1 Weight Fraction VOC.

2.1.1 Apparatus.

2.1.1.1 Weighing Dishes. Aluminum foil, 58 mm in diameter by 18 mm high, with a flat bottom. There must be at least three weighing dishes per sample.

2.1.1.2 Disposable Syringe. 5 ml.

2.1.1.3 Analytical Balance. To measure to within 0.1 mg.

2.1.1.4 Oven. Vacuum oven capable of maintaining a temperature of 120±2 °C and an absolute pressure of 510 ±51 mm Hg for 4 hours. Alternatively, a forced draft oven capable of maintaining a temperature of 120±2 °C for 24 hours.

2.1.2 Analysis. Shake or mix the sample thoroughly to assure that all the solids are completely suspended. Label and weigh to the nearest 0.1 mg a weighing dish and record this weight (M_{xl}).

Using a 5-ml syringe without a needle remove a sample of the coating. Weigh the syringe and sample to the nearest 0.1 mg and record this weight (M_{cYl}). Transfer 1 to 3 g of the sample to the tared weighing dish. Reweigh the syringe and sample to the nearest 0.1 mg and record this weight (M_{cY2}). Heat the weighing dish and sample in a vacuum oven at an absolute pressure of 510±51 mm Hg and a temperature of 120±2 °C for 4 hours. Alternatively, heat the weighing dish and sample in a forced draft oven at a temperature of 120±2 °C for 24 hours. After the weighing dish has cooled, reweigh it to the nearest 0.1 mg and record the weight (M_{x2}). Repeat this procedure for a total of three determinations for each sample.

2.2 Coating Density. Determine the density of the ink or related coating according to the procedure outlined in ASTM D 1475–60 (Reapproved 1980), (incorporated by reference—see § 60.17).

2.3 Solvent Density. Determine the density of the solvent according to the procedure outlined in ASTM D 1475–60 (reapproved 1980). Make a total of three determinations for each coating. Report the density D_o as the arithmetic average of the three determinations.

3. *Calculations*

3.1 Weight Fraction VOC. Calculate the weight fraction volatile organic content W_o using the following equation:

$$W_o = \frac{M_{x1} + M_{cY1} - M_{cY2} - M_{x2}}{M_{cY1} - M_{cY2}} \qquad \text{Eq. 24A-1}$$

Report the weight fraction VOC W_o as the arithmetic average of the three determinations.

3.2 Volume Fraction VOC. Calculate the volume fraction volatile organic content V_o using the following equation:

$$V_o = (W_o D_c / D_o$$

Eq. 24A–2

4. *Bibliography*

1. Standard Test Method for Density of Paint, Varnish, Lacquer, and Related Products. ASTM Designation D 1475–60 (Reapproved 1980).

2. Teleconversation. Wright, Chuck, Inmont Corporation with Reich, R. A., Radian Corporation. September 25, 1979. Gravure Ink Analysis.

3. Teleconversation. Oppenheimer, Robert, Gravure Research Institute with Burt, Rick, Radian Corporation, November 5, 1979. Gravure Ink Analysis.

METHOD 25—DETERMINATION OF TOTAL GASEOUS NONMETHANE ORGANIC EMISSIONS AS CARBON

1. Applicability and Principle

1.1 Applicability. This method applies to the measurement of volatile organic compounds (VOC) as total gaseous nonmethane organics (TGNMO) as carbon in source emissions. Organic particulate matter will interfere with the analysis and, therefore, a particulate filter is required. The minimum detectable for the method is 50 ppm as carbon.

When carbon dioxide (CO_2) and water vapor are present together in the stack, they can produce a positive bias in the sample. The magnitude of the bias depends on the concentrations of CO_2 and water vapor. As a guideline, multiply the CO_2 concentration, expressed as volume percent, times the water vapor concentration. If this product does not exceed 100, the bias can be considered insignificant. For example, the bias is not significant for a source having 10 percent CO_2 and 10 percent water vapor, but it would be significant for a source near the detection limit having 10 percent CO_2 and 20 percent water vapor.

This method is not the only method that applies to the measurement of TGNMO. Costs, logistics, and other practicalities of source testing may make other test methods more desirable for measuring VOC contents of certain effluent streams. Proper judgment is required in determining the most applicable VOC test method. For example, depending upon the molecular weight of the organics in the effluent stream, a totally automated semicontinuous nonmethane organics (NMO) analyzer interfaced directly to the source may yield accurate results. This approach has the advantage of providing emission data semicontinuously over an extended time period.

Direct measurement of an effluent with a flame ionization detector (FID) analyzer may be appropriate with prior characterization of the gas stream and knowledge that the detector responds predictably to the organic compounds in the stream. If present, methane (CH_4) will, of course, also be measured. The FID can be applied to the determination of the mass concentration of the total molecular structure of the organic emissions under any of the following limited conditions: (1) Where only one compound is known to exist; (2) when the organic compounds consist of only hydrogen and carbon; (3) where the relative percentages of the compounds are known or can be determined, and the FID responses to the compounds are known; (4) where a consistent mixture of the compounds exists before and after emission control and *only* the relative concentrations are to be assessed; or (5) where the FID can be calibrated against mass standards of the compounds emitted (solvent emissions, for example).

Another example of the use of a direct FID is as a screening method. If there is enough information available to provide a rough estimate of the analyzer accuracy, the FID analyzer can be used to determine the VOC content of an uncharacterized gas stream. With a sufficient buffer to account for possible inaccuracies, the direct FID can be a useful tool to obtain the desired results without costly exact determination.

In situations where a qualitative/quantitative analysis of an effluent stream is desired or required, a gas chromatographic FID system may apply. However, for sources emitting numerous organics, the time and expense of this approach will be formidable.

1.2 Principle. An emission sample is withdrawn from the stack at a constant rate through a heated filter and a chilled condensate trap by means of an evacuated sample tank. After sampling is completed, the TGNMO are determined by independently analyzing the condensate trap and sample tank fractions and combining the analytical results. The organic content of the condensate trap fraction is determined by oxidizing the NMO to CO_2 and quantitatively collecting the effluent in an evacuated vessel; then a portion of the CO_2 is reduced to CH_4 and measured by an FID. The organic content of the sample tank fraction is measured by injecting a portion of the sample into a gas chromatographic column to separate the NMO from carbon monoxide (CO), CO_2, and CH_4; the NMO are oxidized to CO_2, reduced to CH_4, and measured by an FID. In this manner, the variable response of the FID associated with different types of organics is eliminated.

2. Apparatus

2.1 Sampling. The sampling system consists of a heated probe, heated filter, condensate trap, flow control system, and sample tank (Figure 25–1). The TGNMO sampling equipment can be constructed from commercially available components and components fabricated in a machine shop. The following equipment is required:

2.1.1 Heated Probe. 6.4-mm (¼-in.) OD stainless steel tubing with a heating system capable of maintaining a gas temperature at the exit end of at least 129 °C (265 °F). The probe shall be equipped with a thermocouple at the exit end to monitor the gas temperature.

A suitable probe is shown in Figure 25–1. The nozzle is an elbow fitting attached to the front end of the probe while the thermocouple is inserted in the side arm of a tee fitting attached to the rear of the probe. The probe is wrapped with a suitable length of high temperature heating tape, and then covered with two layers of glass cloth insulation and one layer of aluminum foil.

NOTE. If it is not possible to use a heating system for safety reasons, an unheated system with an in-stack filter is a suitable alternative.

2.1.2 Filter Holder. 25-mm (15⁄16-in.) ID Gelman filter holder with stainless steel body and stainless steel support screen with the Viton O-ring replaced by a Teflon O-ring.

NOTE. Mention of trade names or specific products does not constitute endorsement by the Environmental Protection Agency.

2.1.3 Filter Heating System. A metal box consisting of an inner and an outer shell separated by insulating material with a heating element in the inner shell capable of maintaining a gas temperature at the filter of 121±3 °C (250±5 °F).

A suitable heating box is shown in Figure 25–2. The outer shell is a metal box that measures 102 mm×280 mm×292 mm (4 in.×11 in.×11½ in.), while the inner shell is a metal box measuring 76 mm×229 mm×241 mm (3 in.×9 in.×9½ in.). The inner box is supported by 13-mm (½-in.) phenolic rods. The void space between the boxes is filled with fiberfrax insulation which is sealed in place by means of a silicon rubber bead around the upper sides of the box. A removable lid made in a similar manner, with a 25-mm (1-in.) gap between the parts, is used to cover the heating chamber.

The inner box is heated witn a 250-watt cartridge heater, shielded by a stainless steel shroud. The heater is regulated by a thermostatic temperature controller which is set to maintain a temperature of 121 °C as measured by a thermocouple in the gas line just before the filter. An additional thermocouple is used to monitor the temperature of the gas behind the filter.

2.1.4 Condensate Trap. 9.5-mm (⅜-in.) OD 316 stainless steel tubing bent into a U-shape. Exact dimensions are shown in Figure 25–3. The tubing shall be packed with coarse quartz wool, to a density of approximately 0.11 g/cc before bending. While the condensate trap is packed with dry ice in the Dewar, an ice bridge may form between the arms of the condensate trap making it difficult to remove the condensate trap. This problem can be prevented by attaching a steel plate between the arms of the condensate trap in the same plane as the arms to completely fill the intervening space.

2.1.5 Valve. Stainless steel shut-off valve for starting and stopping sample flow.

2.1.6 Metering Valve. Stainless steel control valve for regulating the sample flow rate through the sample train.

2.1.7 Rotameter. Glass tube with stainless steel fittings, capable of measuring sample flow in the range of 60 to 100 cc/min.

2.1.8 Sample Tank. Stainless steel or aluminum tank with a minimum volume of 4 liters.

2.1.9 Mercury Manometer or Absolute Pressure Gauge. Capable of measuring pressure to within 1 mm Hg in the range of 0 to 900 mm.

2.1.10 Vacuum Pump. Capable of evacuating to an absolute pressure of 10 mm Hg.

2.2 Condensate Recovery Apparatus. The system for the recovery of the organics captured in the condensate trap consists of a heat source, oxidation catalyst, nondispersive infrared (NDIR) analyzer and an intermediate collection vessel (ICV). Figure 25–4 is a schematic of a typical system. The system shall be capable of proper oxidation and recovery, as specified in Section 5.1. The following major components are required:

2.2.1 Heat Source. Sufficient to heat the condensate trap (including connecting tubing) to a temperature of 200 °C. A system using both a heat gun and an electric tube furnace is recommended.

2.2.2 Heat Tape. Sufficient to heat the connecting tubing between the water trap and the oxidation catalyst to 100 °C.

2.2.3 Oxidation Catalyst. A suitable length of 9.5-mm (⅜-in.) OD Inconel 600 tubing packed with 15 cm (6 in.) of 3.2-mm (⅛-1n.) diameter 19 percent chromia on alumina pellets. The catalyst material is packed in the center of the catalyst tube with quartz wool packed on either end to hold it in place. The catalyst tube shall be mounted vertically in a 650 °C tube furnace.

2.2.4 Water Trap. Leak proof, capable of removing moisture from the gas stream

2.2.5 Syringe Port. A 6.4-mm (¼-in.) OD stainless steel tee fitting with a rubber septum placed in the side arm.

2.2.6 NDIR Detector. Capable of indicating CO_2 concentration in the range of zero to 5

percent, to monitor the progress of combustion of the organic compounds from the condensate trap.

2.2.7 Flow-Control Valve. Stainless steel, to maintain the trap conditioning system near atmospheric pressure.

2.2.8 Intermediate Collection Vessel. Stainless steel or aluminum, equipped with a female quick connect. Tanks with nominal volumes of at least 6 liters are recommended.

2.2.9 Mercury Manometer or Absolute Pressure Gauge. Capable of measuring pressure to within 1 mm Hg in the range of 0 to 900 mm.

2.2.10 Syringe. 10-ml gas-tight, glass syringe equipped with an appropriate needle.

2.3 NMO Analyzer. The NMO analyzer is a gas chromatograph (GC) with backflush capability for NMO analysis and is equipped with an oxidation catalyst, reduction catalyst, and FID. Figures 25–5 and 25–6 are schematics of a typical NMO analyzer. This semicontinuous GC/FID analyzer shall be capable of: (1) Separating CO, CO_2, and CH_4 from NMO, (2) reducing the CO_2 to CH_4 and quantifying as CH_4, and (3) oxidizing the NMO to CO_2, reducing the CO_2 to CH_4 and quantifying as CH_4, according to Section 5.2. The analyzer consists of the following major components:

2.3.1 Oxidation Catalyst. A suitable length of 9.5-mm (⅜-in.) OD Inconel 600 tubing packed with 5.1 cm (2 in.) of 19 percent chromia on 3.2-mm (⅛-in.) alumina pellets. The catalyst material is packed in the center of the tube supported on either side by quartz wool. The catalyst tube must be mounted vertically in a 650 °C furnace.

2.3.2 Reduction Catalyst. A 7.6-cm (3-in.) length of 6.4-mm (¼-in.) OD Inconel tubing fully packed with 100-mesh pure nickel powder. The catalyst tube must be mounted vertically in a 400 °C furnace.

2.3.3 Separation Column(s). A 30-cm (1-ft) length of 3.2-mm (⅛-in.) OD stainless steel tubing packed with 60/80 mesh Unibeads 1S followed by a 61-cm (2-ft) length of 3.2-mm (⅛-in.) OD stainless steel tubing packed with 60/80 mesh Carbosieve G. The Carbosieve and Unibeads columns must be baked separately at 200 °C with carrier gas flowing through them for 24 hours before initial use.

2.3.4 Sample Injection System. A 10-port GC sample injection valve fitted with a sample loop properly sized to interface with the NMO analyzer (1-cc loop recommended).

2.3.5 FID. An FID meeting the following specifications is required:

2.3.5.1 Linearity. A linear response (±5 percent) over the operating range as demonstrated by the procedures established in Section 5.2.3.

2.3.5.2 Range. A full scale range of 10 to 50,000 ppm CH_4. Signal attenuators shall be available to produce a minimum signal response of 10 percent of full scale.

2.3.6 Data Recording System. Analog strip chart recorder or digital integration system compatible with the FID for permanently recording the analytical results.

2.4 Other Analysis Apparatus.

2.4.1 Barometer. Mercury, aneroid, or other barometer capable of measuring atmospheric pressure to within 1 mm Hg.

2.4.2 Thermometer. Capable of measuring the laboratory temperature to within 1 °C.

2.4.3 Vacuum Pump. Capable of evacuating to an absolute pressure of 10 mm Hg.

2.4.4 Syringes. 10-µl and 50-µl liquid injection syringes.

2.4.5 Liquid Sample Injection Unit. 316 SS U-tube fitted with an injection septum, see Figure 25–7.

3. Reagents

3.1 Sampling. The following are required for sampling:

3.1.1 Crushed Dry Ice.

3.1.2 Coarse Quartz Wool. 8 to 15 µm.

3.1.3 Filters. Glass fiber filters, without organic binder.

3.2 NMO Analysis. The following gases are needed:

3.2.1 Carrier Gases. Zero grade helium (He) and oxygen (O_2 containing less than 1 ppm CO_2 and less than 0.1 ppm C as hydrocarbon.

3.2.2 Fuel Gas. Zero grade hydrogen (H_2), 99.999 percent pure.

3.2.3 Combustion Gas. Zero grade air or O_2 as required by the detector.

3.3 Condensate Analysis. The following gases are needed:

3.3.1 Carrier Gas. Zero grade air, containing less than 1 ppm C.

3.3.2 Auxiliary O_2. Zero grade O_2, containing less than 1 ppm C.

3.3.3 Hexane. ACS grade, for liquid injection.

3.3.4 Decane. ACS grade, for liquid injection.

3.4 Calibration. For all calibration gases, the manufacturer must recommend a maximum shelf life for each cylinder (i.e., the length of time the gas concentration is not expected to change more than ±5 percent from its certified value). The date of gas cylinder preparation, certified organic concentration, and recommended maximum shelf life must be affixed to each cylinder before shipment from the gas manufacturer to the buyer. The following calibration gases are required:

3.4.1 Oxidation Catalyst Efficiency Check Calibration Gas. Gas mixture standard with nominal concentration of 1 percent methane in air.

3.4.2 FID Linearity and NMO Calibration Gases. Three gas mixture standards with nominal propane concentrations of 20 ppm, 200 ppm, and 3000 ppm, in air.

3.4.3 CO_2 Calibration Gases. Three gas mixture standards with nominal CO_2 concentrations of 50 ppm, 500 ppm, and 1 percent, in air.

NOTE.— Total NMO of less than 1 ppm required for 1 percent mixture.

3.4.4 NMO Analyzer System Check Calibration Gases. Four calibration gases are needed as follows:

3.4.4.1 Propane Mixture. Gas mixture standard containing (nominal) 50 ppm CO, 50 ppm CH_4, 2 percent CO_2, and 20 ppm C_3H_8, prepared in air.

3.4.4.2 Hexane. Gas mixture standard containing (nominal) 50 ppm hexane in air.

3.4.4.3 Toluene. Gas mixture standard containing (nominal) 20 ppm toluene in air.

3.4.4.4 Methanol. Gas mixture standard containing (nominal) 100 ppm methanol in air.

4. Procedure

4.1 Sampling.

4.1.1 Cleaning Sampling Equipment. Before its initial use and after each subsequent use, a condensate trap should be thoroughly cleaned and checked to ensure that it is not contaminated. Both cleaning and checking can be accomplished by installing the trap in the condensate recovery system and treating it as if it were a sample. The trap should be heated as described in the final paragraph of Section 4.3.3. A trap may be considered clean when the CO_2 concentration in its effluent gas drops below 10 ppm. This check is optional for traps that have been used to collect samples which were then recovered according to the procedure in Section 4.3.3.

4.1.2 Sample Tank Evacuation and Leak Check. Evacuate the sample tank to 10 mm Hg absolute pressure or less. Then close the sample tank valve, and allow the tank to sit for 60 minutes. The tank is acceptable if no change in tank vacuum is noted. The evacuation and leak check may be conducted either in the laboratory or the field. The results of the leak check should be included in the test report.

4.1.3 Sample Train Assembly. Just before assembly, measure the tank vacuum using a mercury U-tube manometer or absolute pressure gauge. Record this vacuum, the ambient temperature, and the barometric pressure at this time. Close the sample tank valve and assemble the sampling system as shown in Figure 25–1. Immerse the condensate trap body in dry ice. The point where the inlet tube joins the trap body should be 2.5 to 5 cm above the top of the dry ice.

4.1.4 Pretest Leak Check. A pretest leak check is required. Calculate or measure the approximate volume of the sampling train from the probe trip to the sample tank valve. After assembling the sampling train, plug the probe tip, and make certain that the sample tank valve is closed. Turn on the vacuum pump, and evacuate the sampling system from the probe tip to the sample tank valve to an absolute pressure of 10 ppm Hg or less. Close the purge valve, turn off the pump, wait a minimum period of 5 minutes, and recheck the indicated vacuum. Calculate the maximum allowable pressure change based on a leak rate of 1 percent of the sampling rate using Equation 25–1, Section 6.2. If the measured pressure change exceeds the calculated limit, correct the problem before beginning sampling. The results of the leak check should be included in the test report.

4.1.5 Sample Train Operation. Unplug the probe tip, and place the probe into the stack such that the probe is perpendicular to the duct or stack axis; locate the probe tip at a single preselected point of average velocity facing away from the direction of gas flow. For stacks having a negative static pressure, seal the sample port sufficiently to prevent air in-leakage around the probe. Set the probe temperature controller to 129 °C (265 °F) and the filter temperature controller to 121 °C (250 °F). Allow the probe and filter to heat for about 30 minutes before purging the sample train.

Close the sample valve, open the purge valve, and start the vacuum pump. Set the flow rate between 60 and 100 cc/min, and purge the train with stack gas for at least 10 minutes. When the temperatures at the exit ends of the probe and filter are within their specified range, sampling may begin.

Check the dry ice level around the condensate trap, and add dry ice if necessary. Record the clock time. To begin sampling, close the purge valve and stop the pump. Open the sample valve and the sample tank valve. Using the flow control valve, set the flow through the sample train to the proper rate. Adjust the flow rate as necessary to maintain a constant rate (±10 percent) throughout the duration of the sampling period. Record the sample tank vacuum and flowmeter setting at 5-minute intervals. (See Figure 25–8.) Select a total sample time greater than or equal to the minimum sampling time specified in the applicable subpart of the regulation; end the sampling when this time period is reached or when a constant flow rate can no longer be maintained because of reduced sample tank vacuum.

NOTE: If sampling had to be stopped before obtaining the minimum sampling time (specified in the applicable subpart) because a constant flow rate could not be maintained, proceed as follows: After closing the sample tank valve, remove the used sample tank from the sampling train (without disconnecting other portions of the sampling train). Take another evacuated and leak-checked sample tank, measure and record the tank vacuum, and attach the new tank to the sampling train. After the new tank is attached to the sample train, proceed with the sampling until the required minimum sampling time has been exceeded.

4.2 Sample Recovery. After sampling is completed, close the flow control valve, and record the final tank vacuum; then record the tank temperature and barometric pressure. Close the sample tank valve, and disconnect the sample tank from the sample system. Disconnect the condensate trap at the flowmetering system, and tightly seal both ends of the condensate trap. Do not include the probe from the stack to the filter as part of the condensate sample. Keep the trap packed in dry ice until the samples are returned to the laboratory for analysis. Ensure that the test run number is properly identified on the condensate trap and the sample tank(s).

4.3 Condensate Recovery. See Figure 25–9. Set the carrier gas flow rate, and heat the catalyst to its operating temperature to condition the apparatus.

4.3.1 Daily Performance Checks. Each day before analyzing any samples, perform the following tests:

4.3.1.1 Leak Check. With the carrier gas inlets and the flow control valve closed, install a clean condensate trap in the system, and evacuate the system to 10 mm Hg absolute pressure or less. Close the vacuum pump valve and turn off the vacuum pump. Monitor the system pressure for 10 minutes. The system is acceptable if the pressure change is less than 2 mm Hg.

4.3.1.2 System Background Test. Adjust the carrier gas and auxiliary oxygen flow rate to their normal values of 100 cc/min and 150 cc/min, respectively, with the sample recovery valve in vent position. Using a 10-ml syringe withdraw a sample from the system effluent through the syringe port. Inject this sample into the NMO analyzer, and measure the CO_2 content. The system background is acceptable if the CO_2 concentration is less than 10 ppm.

4.3.1.3 Oxidation Catalyst Efficiency Check. Conduct a catalyst efficiency test as specified in Section 5.1.2 of this method. If the criterion of this test cannot be met, make the necessary repairs to the system before proceeding.

4.3.2 Condensate Trap CO_2 Purge and Sample Tank Pressurization. After sampling is completed, the condensate trap will contain condensed water and organics and a small volume of sampled gas. This gas from the stack may contain a significant amount of CO_2 which must be removed from the condensate trap before the sample is recovered. This is accomplished by purging the condensate trap with zero air and collecting the purged gas in the original sample tank.

Begin with the sample tank and condensate trap from the test run to be analyzed. Set the four-port valve of the condensate recovery system in the CO_2 purge position as shown in Figure 25–9. With the sample tank valve closed, attach the sample tank to the sample recovery system. With the sample recovery valve in the vent position and the flow control valve fully open, evacuate the manometer or pressure gauge to the vacuum of the sample tank. Next, close the vacuum pump valve, open the sample tank valve, and record the tank pressure.

Attach the dry-ice-cooled condensate trap to the recovery system, and initiate the purge by switching the sample recovery valve from vent to collect position. Adjust the flow control valve to maintain atmospheric pressure in the recovery system. Continue the purge until the CO_2 concentration of the trap effluent is less than 5 ppm. CO_2 concentration in the trap effluent should be measured by extracting syringe samples from the recovery system and analyzing the samples with the NMO analyzer. This procedure should be used only after the NDIR response has reached a minimum level. Using a 10-ml syringe, extract a sample from the syringe port prior to the NDIR, and inject this sample into the NMO analyzer.

After the completion of the CO_2 purge, use the carrier gas bypass valve to pressurize the sample tank to approximately 1060 mm Hg absolute pressure with zero air.

4.3.3 Recovery of the Condensate Trap Sample. See Figure 25–10. Attach the ICV to the sample recovery system. With the sample recovery valve in a closed position, between vent and collect, and the flow control and ICV valves fully open, evacuate the manometer or gauge, the connecting tubing, and the ICV to 10 mm Hg absolute pressure. Close the flow-control and vacuum pump valves.

Begin auxiliary oxygen flow to the oxidation catalyst at a rate of 150 cc/min, then switch the four-way valve to the trap recovery position and the sample recovery valve to collect position. The system should now be set up to operate as indicated in Figure 25–10. After the manometer or pressure gauge begins to register a slight positive pressure, open the flow control valve. Adjust the flow-control valve to maintain atmospheric pressure in the system within 10 percent.

Now, remove the condensate trap from the dry ice, and allow it to warm to ambient temperature while monitoring the NDIR response. If after 5 minutes, the CO_2 concentration of the catalyst effluent is below 10,000 ppm, discontinue the auxiliary oxygen flow to the oxidation catalyst. Begin heating the trap by placing it in a furnace preheated to 200 °C. Once heating has begun, carefully monitor the NDIR response to ensure that the catalyst effluent concentration does not exceed 50,000 ppm. Whenever the CO_2 concentration exceeds 50,000 ppm, supply auxiliary oxygen to the catalyst at the rate of 150 cc/min. Begin heating the tubing that connected the heated sample box to the condensate trap only after the CO_2 concentration falls below 10,000 ppm. This tubing may be heated in the same oven as the condensate

trap or with an auxiliary heat source such as a heat gun. Heating temperature must not exceed 200 °C. If a heat gun is used, heat the tubing slowly along its entire length from the upstream end to the downstream end, and repeat the pattern for a total of three times. Continue the recovery until the CO_2 concentration drops to less than 10 ppm as determined by syringe injection as described under the condensate trap CO_2 purge Procedure, Section 4.3.2.

After the sample recovery is completed, use the carrier gas bypass valve to pressurize the ICV to approximately 1060 mm Hg absolute pressure with zero air.

4.4 Analysis. Before putting the NMO analyzer into routine operation, conduct an initial performance test. Start the analyzer, and perform all the necessary functions in order to put the analyzer into proper working order; then conduct the performance test according to the procedures established in Section 5.2. Once the performance test has been successfully completed and the CO_2 and NMO calibration response factors have been determined, proceed with sample analysis as follows:

4.4.1 Daily Operations and Calibration Checks. Before and immediately after the analysis of each set of samples or on a daily basis (whichever occurs first), conduct a calibration test according to the procedures established in Section 5.3. If the criteria of the daily calibration test cannot be met, repeat the NMO analyzer performance test (Section 5.2) before proceeding.

4.4.2 Operating Conditions. The carrier gas flow rate is 29.5 cc/min He and 2.2 cc/min O_2. The column oven is heated to 85 °C. The order of elution for the sample from the column is CO, CH_4, CO_2, and NMO.

4.4.3 Analysis of Recovered Condensate Sample. Purge the sample loop with sample, and then inject the sample. Under the specified operating conditions, the CO_2 in the sample will elute in approximately 100 seconds. As soon as the detector response returns to baseline following the CO_2 peak, switch the carrier gas flow to backflush, and raise the column oven temperature to 195 °C as rapidly as possible. A rate of 30 °C/min has been shown to be adequate. Record the value obtained for the condensible organic material (C_{cm}) measured as CO_2 and any measured NMO. Return the column oven temperature to 85 °C in preparation for the next analysis. Analyze each sample in triplicate, and report the average C_{cm}.

4.4.4 Analysis of Sample Tank. Perform the analysis as described in Section 4.4.3, but record only the value measured for NMO (C_{tm}).

4.5 Audit Samples. Analyze a set of two audit samples concurrently with any compliance samples and in exactly the same manner to evaluate the analyst's technique and the instrument calibration. The same analysts, analytical reagents, and analytical system shall be used for the compliance samples and the EPA audit samples; if this condition is met, auditing of subsequent compliance analyses for the same enforcement agency within 30 days is not required. An audit sample set may not be used to validate different sets of compliance samples under the jurisdiction of different enforcement agencies, unless prior arrangements are made with both enforcement agencies.

Calculate the concentrations of the audit samples in ppm using the specified sample volume in the audit instructions. (NOTE.—Indication of acceptable results may be obtained immediately by reporting the audit results in ppm and compliance results in ppm by telephone to the responsible enforcement agency.) Include the results of both audit samples, their identification numbers, and the analyst's name with the results of the compliance determination samples in appropriate reports to the EPA regional office or the appropriate enforcement agency during the 30-day period.

The concentration of the audit samples obtained by the analyst shall agree within 20 percent of the actual concentrations. Failure to meet the 20-percent specification may require retests until the audit problems are resolved. However, if the audit results do not affect the compliance or noncompliance status of the affected facility, the Administrator may waive the reanalysis requirement, further audits, or retests and accept the results of the compliance test. While steps are being taken to resolve audit analysis problems, the Administrator may also choose to use the data to determine the compliance or noncompliance of the affected facility.

5. Calibration and Operational Checks

Maintain a record of performance of each item.

5.1 Initial Performance Check of Condensate Recovery Apparatus. Perform these tests before the system is first placed in operation, after any shutdown of 6 months or more, and after any major modification of the system, or at the specified frequency.

5.1.1 Carrier Gas and Auxiliary O_2 Blank Check. Analyze each new tank of carrier gas or auxiliary O_2 with the NMO analyzer to check for contamination. Treat the gas cylinders as noncondensible gas samples, and analyze according to the procedure in Section 4.4.3. Add together any measured CH_4, CO, CO_2, or NMO. The total concentration must be less than 5 ppm.

5.1.2 Catalyst Efficiency Check. With a clean condensate trap installed in the recovery system, replace the carrier gas cylinder with the high level methane standard gas cylinder (Section 3.4.1). Set the four-port valve to the recovery position, and attach an ICV to the recovery system. With the sample

recovery valve in vent position and the flow-control and ICV valves fully open, evacuate the manometer or gauge, the connecting tubing, and the ICV to 10 mm Hg absolute pressure. Close the flow-control and vacuum pump valves.

After the NDIR response has stabilized, switch the sample recovery valve from vent to collect. When the manometer or pressure gauge begins to register a slight positive pressure, open the flow-control valve. Keep the flow adjusted so that atmospheric pressure is maintained in the system within 10 percent. Continue collecting the sample in a normal manner until the ICV is filled to a nominal gauge pressure of 300 mm Hg. Close the ICV valve, and remove the ICV from the system. Place the sample recovery valve in the vent position, and return the recovery system to its normal carrier gas and normal operating conditions. Analyze the ICV for CO_2 using the NMO analyzer; the catalyst efficiency is acceptable if the CO_2 concentration is within 2 percent of the methane standard concentration.

5.1.3 System Performance Check. Construct a liquid sample injection unit similar in design to the unit shown in Figure 25–7. Insert this unit into the condensate recovery and conditioning system in place of a condensate trap, and set the carrier gas and auxiliary O_2 flow rates to normal operating levels. Attach an evacuated ICV to the system, and switch from system vent to collect. With the carrier gas routed through the injection unit and the oxidation catalyst, inject a liquid sample (See Sections 5.1.3.1 to 5.1.3.4) into the injection port. Operate the trap recovery system as described in Section 4.3.3. Measure the final ICV pressure, and then analyze the vessel to determine the CO_2 concentration. For each injection, calculate the percent recovery using the equation in Section 6.6.

The performance test is acceptable if the average percent recovery is 100±10 percent with a relative standard deviation (Section 6.9) of less than 5 percent for each set of triplicate injections as follows:

5.1.3.1 50 µl Hexane.

5.1.3.2 10 µl Hexane.

5.1.3.3 50 µl Decane.

5.1.3.4 10 µl Decane.

5.2 Initial NMO Analyzer Performance Test. Perform these tests before the system is first placed in operation, after any shutdown longer than 6 months, and after any major modification of the system.

5.2.1 Oxidation Catalyst Efficiency Check. Turn off or bypass the NMO analyzer reduction catalyst. Make triplicate injections of the high level methane standard (Section 3.4.1). The oxidation catalyst operation is acceptable if the FID response is less than 1 percent of the injected methane concentration.

5.2.2 Reduction Catalyst Efficiency Check. With the oxidation catalyst unheated or bypassed and the heated reduction catalyst bypassed, make triplicate injections of the high level methane standard (Section 3.4.1). Repeat this procedure with both catalysts operative. The reduction catalyst operation is acceptable if the response under both conditions agree within 5 percent.

5.2.3 Analyzer Linearity Check and NMO Calibration. While operating both the oxidation and reduction catalysts, conduct a linearity check of the analyzer using the propane standards specified in Section 3.4.2. Make triplicate injections of each calibration gas, and then calculate the average response factor (area/ppm C) for each gas, as well as the overall mean of the response factor values. The instrument linearity is acceptable if the average response factor of each calibration gas is within 2.5 percent of the overall mean value and if the relative standard deviation (Section 6.9) for each set of triplicate injections is less than 2 percent. Record the overall mean of the propane response factor values as the NMO calibration response factor (RF_{NMO}).

Repeat the linearity check using the CO_2 standards specified in Section 3.4.3. Make triplicate injections of each gas, and then calculate the average response factor (area/ppm C) for each gas, as well as the overall mean of the response factor values. Record the overall mean of the response factor values as the CO_2 calibration response factor (RF_{CO2}). Linearity is acceptable if the average response factor of each calibration gas is within 2.5 percent of the overall mean value and if the relative standard deviation for each set of triplicate injections is less than 2 percent. The RF_{CO2} must be witnin 10 percent of the RF_{NMO}.

5.2.4 System Peformance Check. Check the column separation and overall performance of the analyzer by making triplicate injections of the calibration gases listed in Section 3.4.4. The analyzer performance is acceptable if the measured NMO value for each gas (average of triplicate injections) is within 5 percent of the expected value.

5.3 NMO Analyzer Daily Calibration.

5.3.1 CO_2 Response Factor. Inject triplicate samples of the high level CO_2 calibration gas (Section 3.4.3), and calculate the average response factor. The system operation is adequate if the calculated response factor is within 5 percent of the RF_{CO2} calculated during the initial performance test (Section 5.2.3). Use the daily response factor (DRF_{CO2}) for analyzer calibration and the calculation of measured CO_2 concentrations in the ICV samples.

5.3.2 NMO Response Factors. Inject triplicate samples of the mixed propane calibration cylinder (Section 3.4.4.1), and calculate the average NMO response factor. The system operation is adequate if the calculated

response factor is within 5 percent of the RF_{NMO} calculated during the initial performance test (Section 5.2.4). Use the daily response factor (DRF_{NMO}) for analyzer calibration and calculation of NMO concentrations in the sample tanks.

5.4 Sample Tank and ICV Volume. The volume of the gas sampling tanks used must be determined. Determine the tank and ICV volumes by weighing them empty and then filled with deionized distilled water; weigh to the nearest 5 g, and record the results. Alternatively, measure the volume of water used to fill them to the nearest 5 ml.

6. Calculations

All equations are written using absolute pressure; absolute pressures are determined by adding the measured barometric pressure to the measured gauge or manometer pressure.

6.1 Nomenclature.

C=TGNMO concentration of the effluent, ppm C equivalent.

C_c=Calculated condensible organic (condensate trap) concentration of the effluent, ppm C equivalent.

C_{cm}=Measured concentration (NMO analyzer) for the condensate trap ICV, ppm CO_2.

C_t=Calculated noncondensible organic concentration (sample tank) of the effluent, ppm C equivalent.

C_{tm}=Measured concentration (NMO analyzer) for the sample tank, ppm NMO.

F=Sampling flow rate, cc/min.

L=Volume of liquid injected, µl.

M=Molecular weight of the liquid injected, g/g-mole.

m_C=TGNMO mass concentration of the effluent, mg C/dsm^3.

N=Carbon number of the liquid compound injected (N=12 for decane, N=6 for hexane).

P_f=Final pressure of the intermediate collection vessel, mm Hg absolute.

P_b=Barometric pressure, cm Hg.

P_{ti}=Gas sample tank pressure before sampling, mm Hg absolute.

P_t=Gas sample tank pressure after sampling, but before pressurizing, mm Hg absolute.

P_{tf}=Final gas sample tank pressure after pressurizing, mm Hg absolute.

T_f=Final temperature of intermediate collection vessel, °K.

T_{ti}=Sample tank temperature before sampling, °K.

T_t=Sample tank temperature at completion of sampling, °K.

T_{tf}=Sample tank temperature after pressurizing, °K.

V=Sample tank volume, m^3.

V_t=Sample train volume, cc.

V_v=Intermediate collection vessel volume, m^3.

V_s=Gas volume sampled, dsm^3.

n=Number of data points.

q=Total number of analyzer injections of intermediate collection vessel during analysis (where k=injection number, 1 . . . q).

r=Total number of analyzer injections of sample tank during analysis (where j=injection number, 1 . . . r).

x_i=Individual measurements.

x=Mean value.

ρ=Density of liquid injected, g/cc.

Θ=Leak check period, min.

ΔP=Allowable pressure change, cm Hg.

6.2 Allowable Pressure Change. For the pretest leak check, calculate the allowable pressure change:

$$\Delta P = 0.01 \frac{F P_b \theta}{V_t} \qquad \text{Eq. 25-1}$$

6.3 Sample Volume. For each test run, calculate the gas volume sampled:

$$V_s = 0.3857\ V \left[\frac{P_t}{T_t} - \frac{P_{ti}}{T_{ti}} \right] \qquad \text{Eq. 25-2}$$

6.4 Noncondensible Organics. For each sample tank, determine the concentration of nonmethane organics (ppm C):

$$C_t = \left[\frac{\dfrac{P_{tf}}{T_{tf}}}{\dfrac{P_t}{T_t} - \dfrac{P_{ti}}{T_{ti}}} \right] \left[\frac{1}{r} \sum_{j=1}^{r} C_{tm_j} \right] \qquad \text{Eq. 25-3}$$

6.5 Condensible Organics. For each condensate trap determine the concentration of organics (ppm C):

$$C_c = 0.3857 \frac{V_v P_f}{V_s T_f} \left[\frac{1}{q} \sum_{k=1}^{q} C_{cm_k} \right]$$

Eq. 25-4

6.6 TGNMO. To determine the TGNMO concentration for each test run, use the following equation:

$C=C_t+C_c$

Eq. 25–5

6.7 TGNMO Mass Concentration. To determine the TGNMO mass concentration as carbon for each test run, use the following equation:

$m_c=0.4993\ C$

Eq. 25–6

6.8 Percent Recovery. To calculate the percent recovery for the liquid injections to the condensate recovery and conditioning system use the following equation.

$$\text{Percent recovery} = 1.604 \frac{M}{L} \frac{V_v}{P} \frac{P_t}{T_f} \frac{C_{cm}}{N} \qquad \text{Eq. 25-7}$$

6.9 Relative Standard Deviation.

$$RSD = \frac{100}{\bar{x}} \sqrt{\frac{\Sigma (x_i - \bar{x})^2}{n - 1}}$$

Eq. 25-8

7. Bibliography

1. Salo, Albert E., Samuel Witz, and Robert D. MacPhee. Determination of Solvent Vapor Concentrations by Total Combustion Analysis: A Comparison of Infrared with Flame Ionization Detectors. Paper No. 75–33.2. (Presented at the 68th Annual Meeting of the Air Pollution Control Association. Boston, Massachusetts. June 15–20, 1975.) 14 p.

2. Salo, Albert E., William L. Oaks, and Robert D. MacPhee. Measuring the Organic Carbon Content of Source Emissions for Air Pollution Control. Paper No. 74–190. (Presented at the 67th Annual Meeting of the Air Pollution Control Association. Denver, Colorado. June 9–13, 1974.) 25 p.

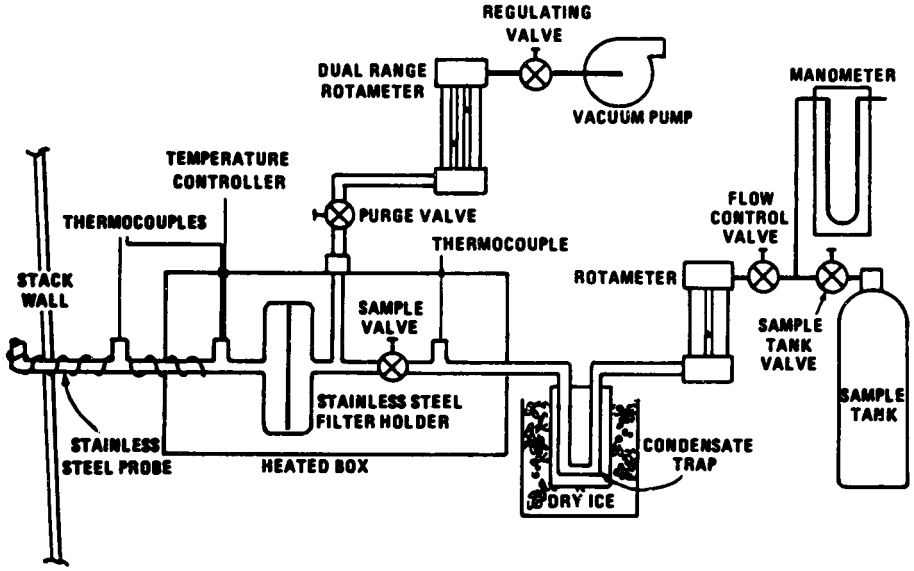

Figure 25-1. Sampling train.

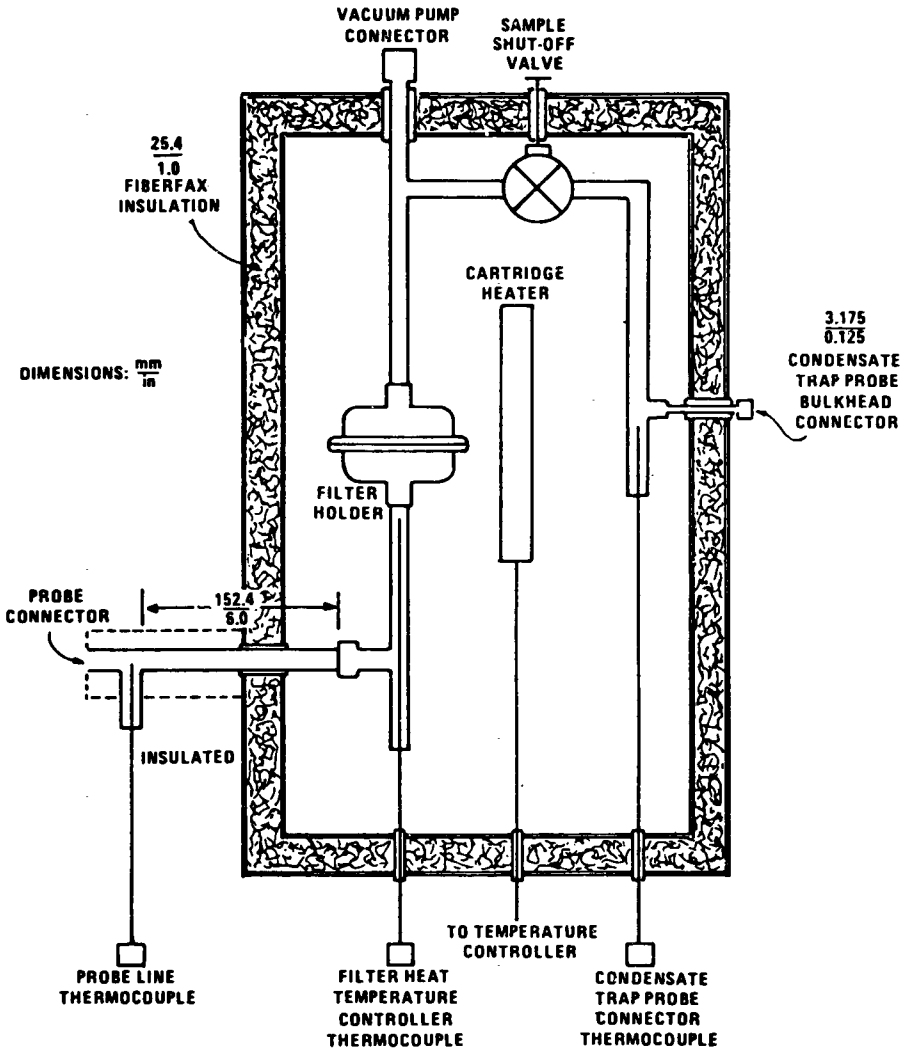

Figure 25-2. Out-of-stack filter box.

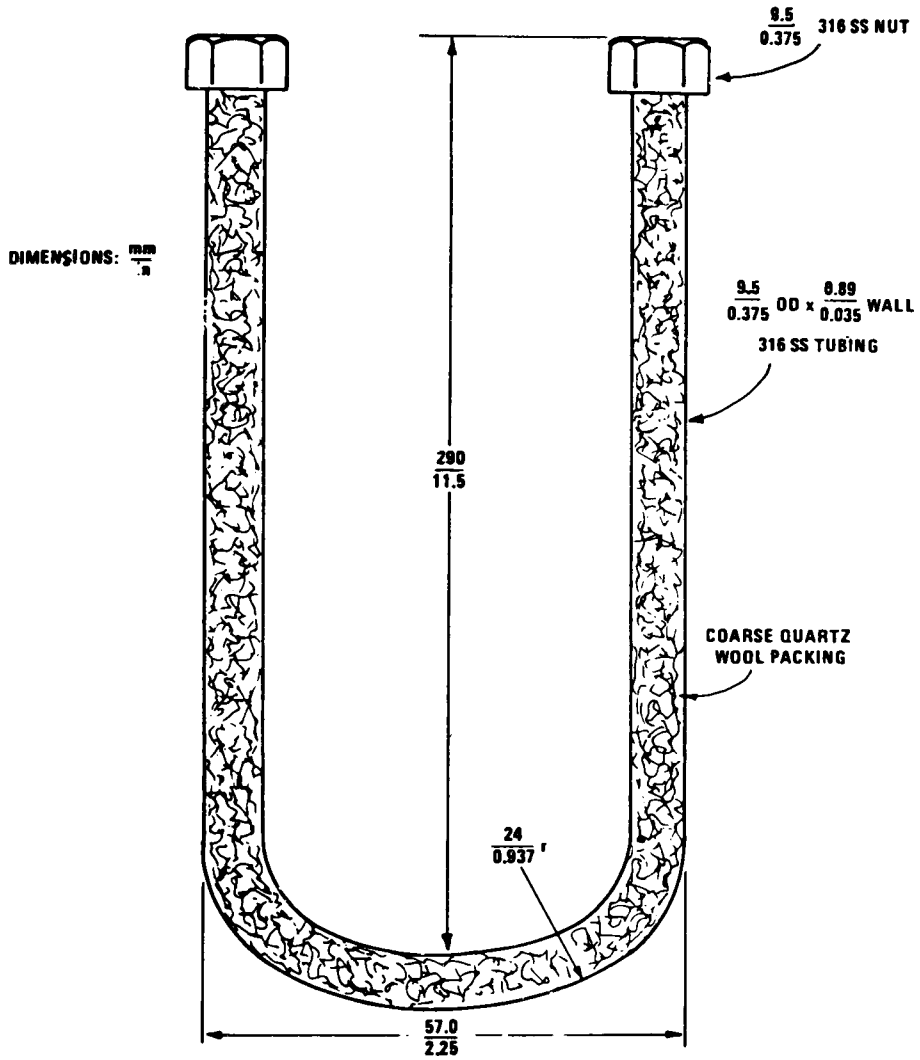

Figure 25-3. Condensate trap.

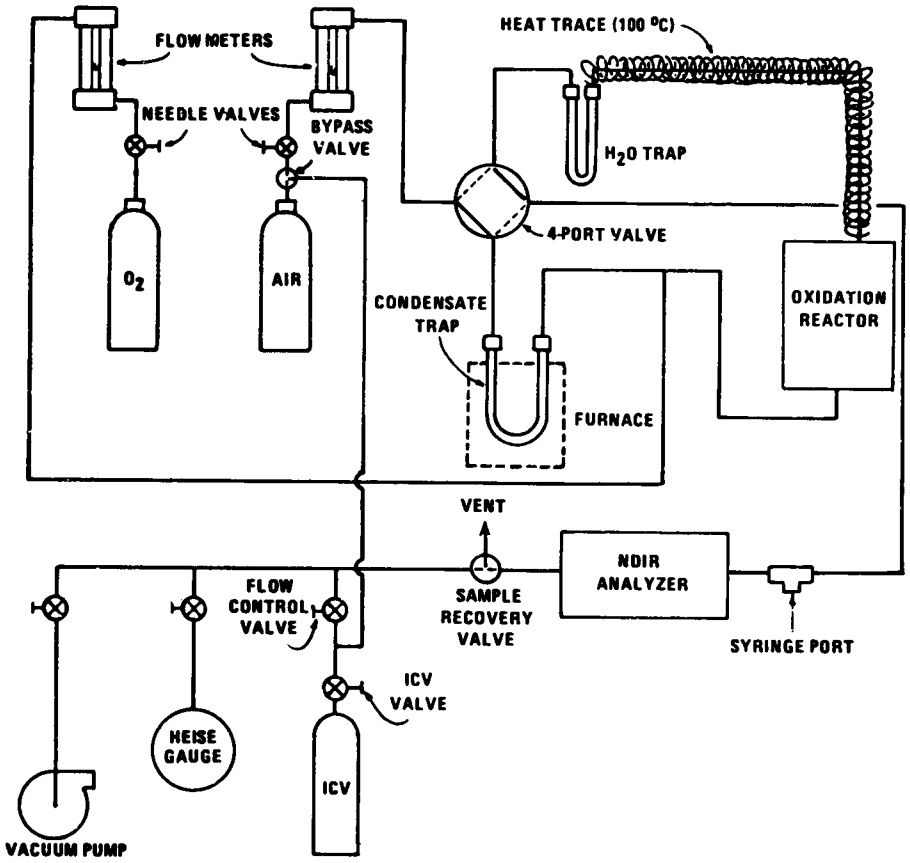

Figure 25-4. Condensate recovery system.

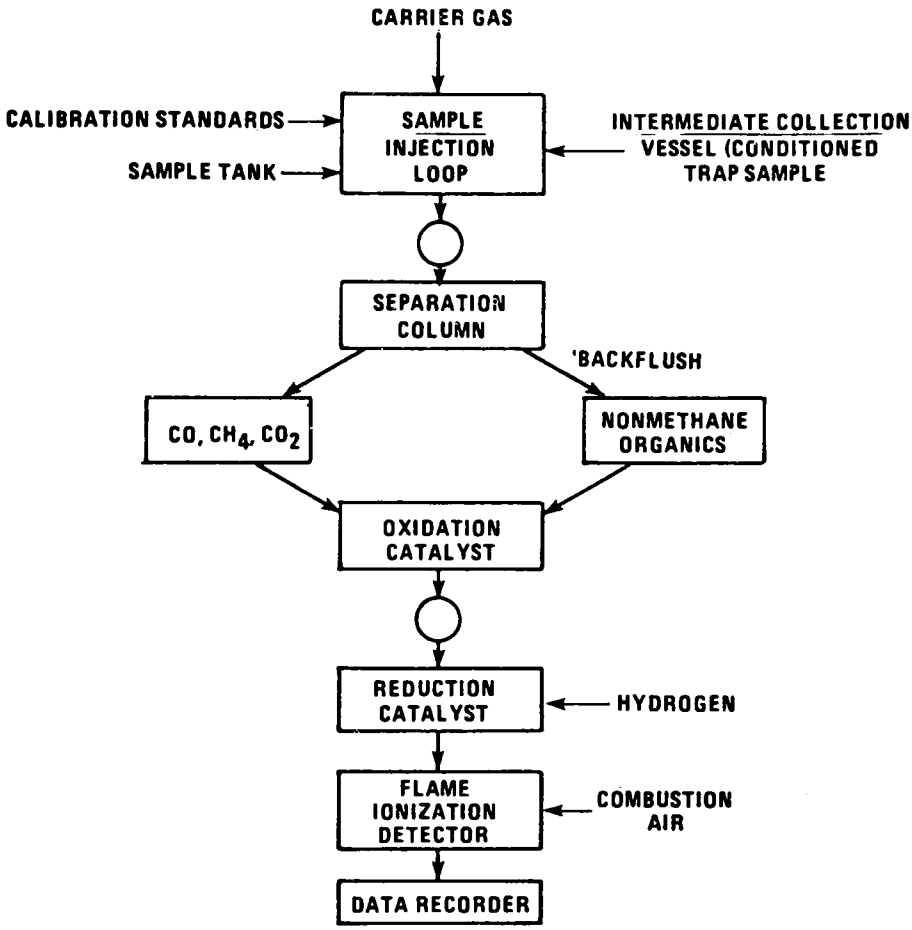

Figure 25-5. Simplified schematic of nonmethane organic (NMO) analyzer.

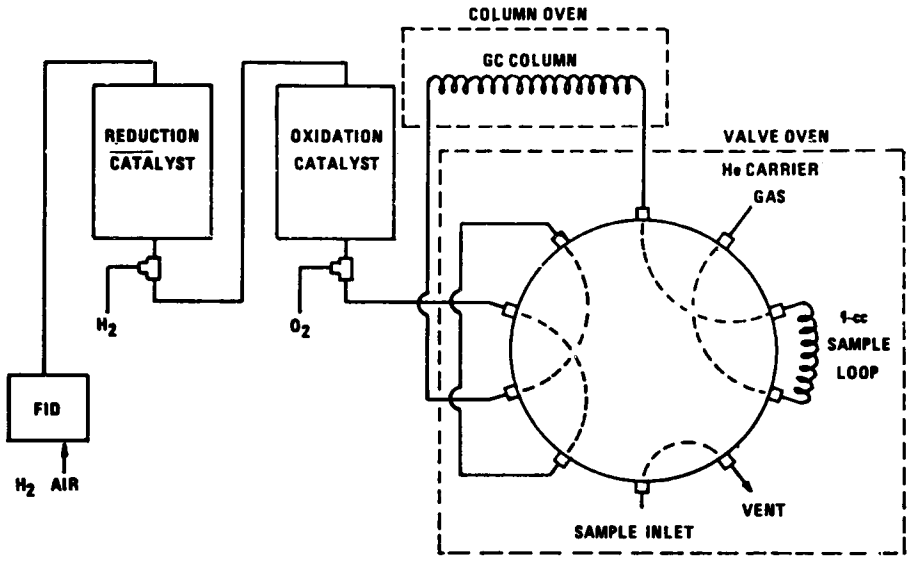

Figure 25-6. Nonmethane organic analyzer (NMO).

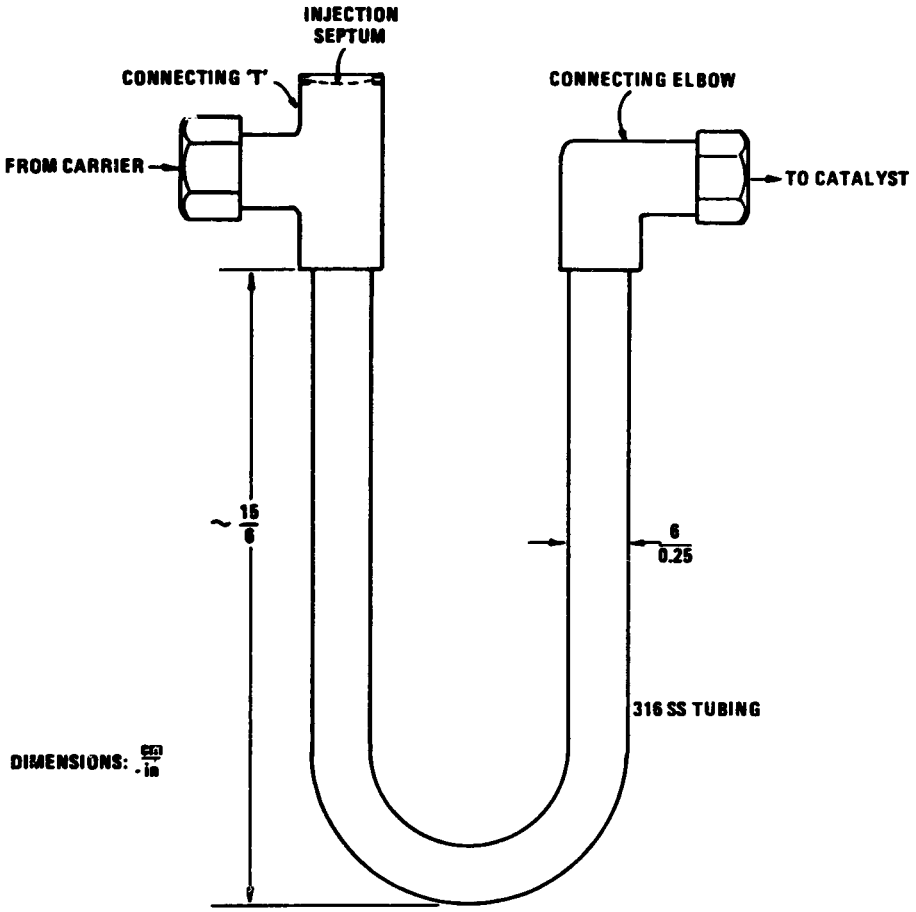

Figure 25-7. Liquid sample injection unit.

VOLATILE ORGANIC CARBON

FACILITY _____ SAMPLE LOCATION _____

LOCATION _____ OPERATOR _____

DATE _____ RUN NUMBER _____

TANK NUMBER _____ TRAP NUMBER _____ SAMPLE ID NUMBER _____

	TANK VACUUM, mm Hg	cm Hg	BAROMETRIC PRESSURE, mm Hg	AMBIENT TEMPERATURE, °C
PRETEST (MANOMETER)		(GAUGE)		
POST TEST (MANOMETER)		(GAUGE)		

LEAK RATE _____ cm Hg / 10 min

PRETEST _____

TIME CLOCK/SAMPLE	VACUUM cm Hg	FLOWMETER SETTING	COMMENTS

Figure 25-8. Example field data form.

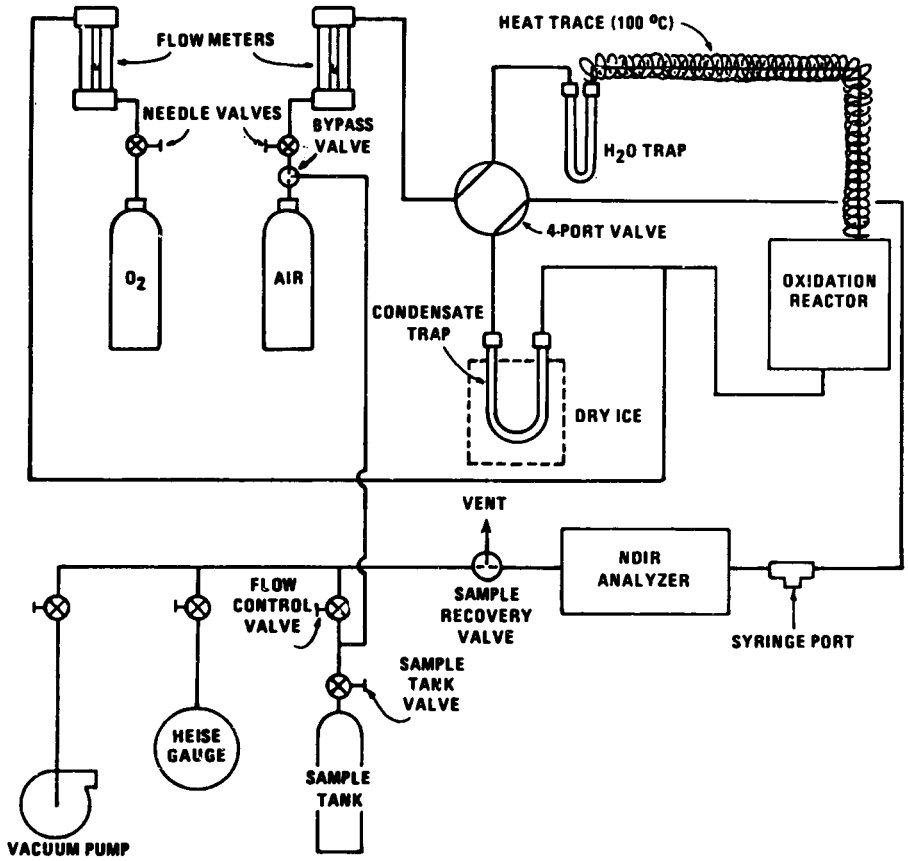

Figure 25-9. Condensate recovery system, CO_2 purge.

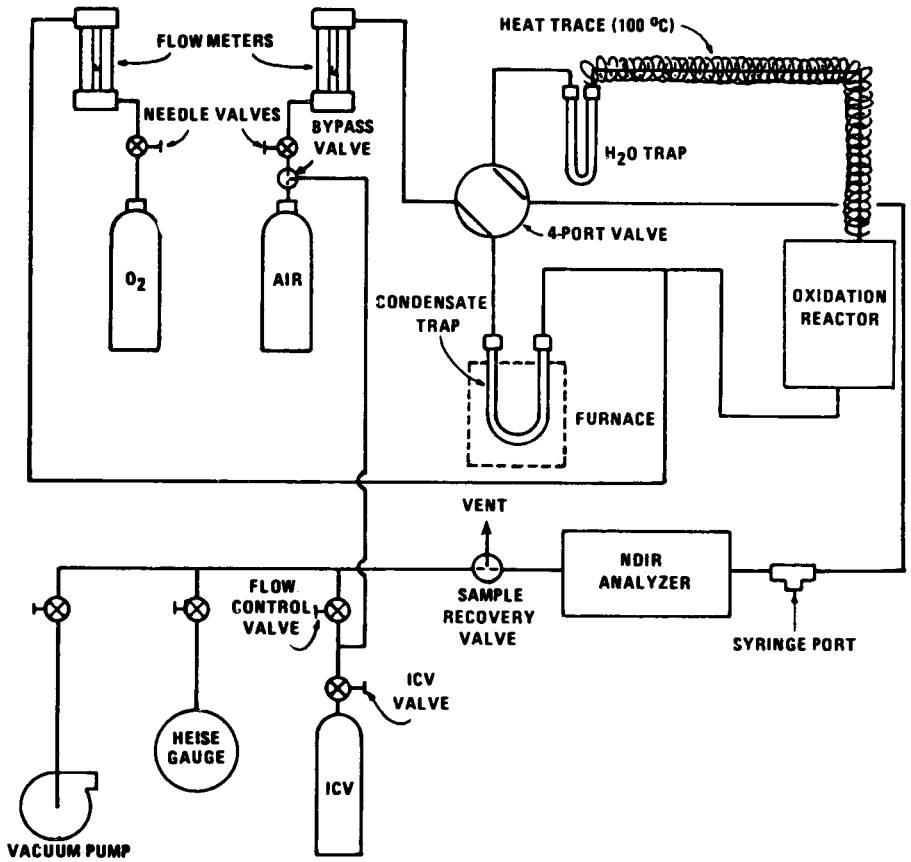

Figure 25-10. Condensate recovery system, collection of trap organics.

METHOD 25A—DETERMINATION OF TOTAL GASEOUS ORGANIC CONCENTRATION USING A FLAME IONIZATION ANALYZER

1. *Applicability and Principle*

1.1 Applicability. This method applies to the measurement of total gaseous organic concentration of vapors consisting primarily of alkanes, alkenes, and/or arenes (aromatic hydrocarbons). The concentration is expressed in terms of propane (or other appropriate organic calibration gas) or in terms of carbon.

1.2 Principle. A gas sample is extracted from the source through a heated sample line, if necessary, and glass fiber filter to a flame ionization analyzer (FIA). Results are reported as volume concentration equivalents of the calibration gas or as carbon equivalents.

2. *Definitions*

2.1 Measurement System. The total equipment required for the determination of the gas concentration. The system consists of the following major subsystems:

2.1.1 Sample Interface. That portion of the system that is used for one or more of the following: sample acquisition, sample transportation, sample conditioning, or protection of the analyzer from the effects of the stack effluent.

2.1.2 Organic Analyzer. That portion of the system that senses organic concentration and generates an output proportional to the gas concentration.

2.2 Span Value. The upper limit of a gas concentration measurement range that is specified for affected source categories in the applicable part of the regulations. The span

value is established in the applicable regulation and is usually 1.5 to 2.5 times the applicable emission limit. If no span value is provided, use a span value equivalent to 1.5 to 2.5 times the expected concentration. For convenience, the span value should correspond to 100 percent of the recorder scale.

2.3 Calibration Gas. A known concentration of a gas in an appropriate diluent gas.

2.4 Zero Drift. The difference in the measurement system response to a zero level calibration gas before and after a stated period of operation during which no unscheduled maintenance, repair, or adjustment took place.

2.5 Calibration Drift. The difference in the measurement system response to a mid-level calibration gas before and after a stated period of operation during which no unscheduled maintenance, repair or adjustment took place.

2.6 Response Time. The time interval from a step change in pollutant concentration at the inlet to the emission measurement system to the time at which 95 percent of the corresponding final value is reached as displayed on the recorder.

2.7 Calibration Error. The difference between the gas concentration indicated by the measurement system and the known concentration of the calibration gas.

3. *Apparatus*

A schematic of an acceptable measurement system is shown in Figure 25A–1. The essential components of the measurement system are described below:

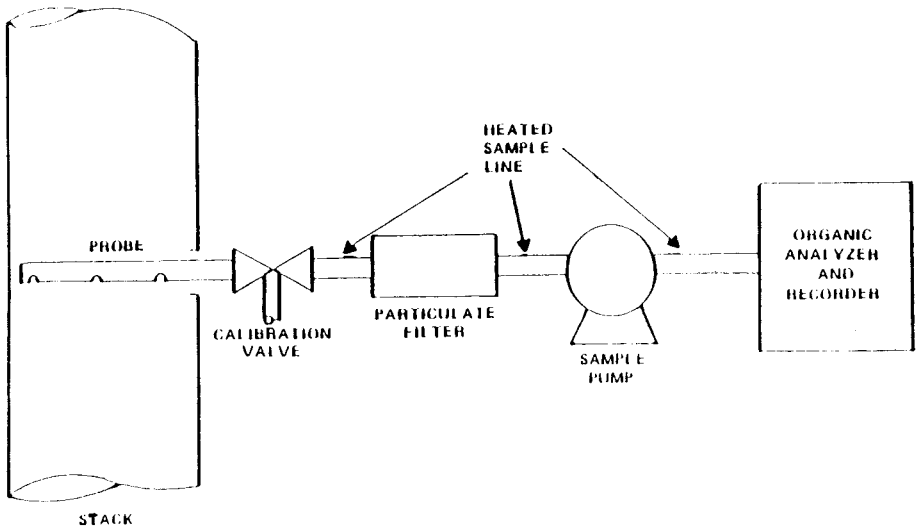

Figure 25A–1. Organic Concentration Measurement System

3.1 Organic Concentration Analyzer. A flame ionization analyzer (FIA) capable of meeting or exceeding the specifications in this method.

3.2 Sample Probe. Stainless steel, or equivalent, three-hole rake type. Sample holes shall be 4 mm in diameter or smaller and located at 16.7, 50, and 83.3 percent of the equivalent stack diameter. Alternatively, a single opening probe may be used so that a gas sample is collected from the centrally located 10 percent area of the stack cross-section.

3.3 Sample Line. Stainless steel or Teflon* tubing to transport the sample gas to the analyzer. The sample line should be heated, if necessary, to prevent condensation in the line.

3.4 Calibration Valve Assembly. A three-way valve assembly to direct the zero and calibration gases to the analyzers is recommended. Other methods, such as quick-connect lines, to route calibration gas to the analyzers are applicable.

*Mention of trade names or specific products does not constitute endorsement by the Environmental Protection Agency.

3.5 Particulate Filter. An in-stack or an out-of-stack glass fiber filter is recommended if exhaust gas particulate loading is significant. An out-of-stack filter should be heated to prevent any condensation.

3.6 Recorder. A strip-chart recorder, analog computer, or digital recorder for recording measurement data. The minimum data recording requirement is one measurement value per minute. Note: This method is often applied in highly explosive areas. Caution and care should be exercised in choice of equipment and installation.

4. *Calibration and Other Gases*

Gases used for calibrations, fuel, and combustion air (if required) are contained in compressed gas cylinders. Preparation of calibration gases shall be done according to the procedure in Protocol No. 1, listed in Citation 2 of Bibliography. Additionally, the manufacturer of the cylinder should provide a recommended shelf life for each calibration gas cylinder over which the concentration does not change more than ±2 percent from the certified value. For calibration gas values not generally available (i.e., organics between 1 and 10 percent by volume), alternative methods for preparing calibration gas mixtures, such as dilution systems, may be used with prior approval of the Administrator.

Calibration gases usually consist of propane in air or nitrogen and are determined in terms of the span value. Organic compounds other than propane can be used following the above guidelines and making the appropriate corrections for response factor.

4.1 Fuel. A 40 percent H_2/60 percent He or 40 percent H_2/60 percent N_2 gas mixture is recommended to avoid an oxygen synergism effect that reportedly occurs when oxygen concentration varies significantly from a mean value.

4.2 Zero Gas. High purity air with less than 0.1 parts per million by volume (ppmv) of organic material (propane or carbon equivalent) or less than 0.1 percent of the span value, whichever is greater.

4.3 Low-level Calibration Gas. An organic calibration gas with a concentration equivalent to 25 to 35 percent of the applicable span value.

4.4 Mid-level Calibration Gas. An organic calibration gas with a concentration equivalent to 45 to 55 percent of the applicable span value.

4.5 High-level Calibration Gas. An organic calibration gas with a concentration equivalent to 80 to 90 percent of the applicable span value.

5. *Measurement System Performance Specifications*

5.1 Zero Drift. Less than ±3 percent of the span value.

5.2 Calibration Drift. Less than ±3 percent of span value.

5.3 Calibration Error. Less than ±5 percent of the calibration gas value.

6. *Pretest Preparations*

6.1 Selection of Sampling Site. The location of the sampling site is generally specified by the applicable regulation or purpose of the test; i.e., exhaust stack, inlet line, etc. The sample port shall be located at least 1.5 meters or 2 equivalent diameters upstream of the gas discharge to the atmosphere.

6.2 Location of Sample Probe. Install the sample probe so that the probe is centrally located in the stack, pipe, or duct and is sealed tightly at the stack port connection.

6.3 Measurement System Preparation. Prior to the emission test, assemble the measurement system following the manufacturer's written instructions in preparing the sample interface and the organic analyzer. Make the system operable.

FIA equipment can be calibrated for almost any range of total organics concentrations. For high concentrations of organics (>1.0 percent by volume as propane) modifications to most commonly available analyzers are necessary. One accepted method of equipment modification is to decrease the size of the sample to the analyzer through the use of a smaller diameter sample capillary. Direct and continuous measurement of organic concentration is a necessary consideration when determining any modification design.

6.4 Calibration Error Test. Immediately prior to the test series, (within 2 hours of the start of the test) introduce zero gas and high-level calibration gas at the calibration valve assembly. Adjust the analyzer output to the appropriate levels, if necessary. Calculate the predicted response for the low-level and mid-level gases based on a linear response line between the zero and high-level responses. Then introduce low-level and mid-level calibration gases successively to the measurement system. Record the analyzer responses for low-level and mid-level calibration gases and determine the differences between the measurement system responses and the predicted responses. These differences must be less than 5 percent of the respective calibration gas value. If not, the measurement system is not acceptable and must be replaced or repaired prior to testing. No adjustments to the measurement system shall be conducted after the calibration and before the drift check (Section 7.3). If adjustments are necessary before the completion of the test series, perform the drift checks prior to the required adjustments and repeat the calibration following the adjustments. If multiple electronic ranges are to be used, each additional range must be checked with a mid-level calibration gas to verify the multiplication factor.

6.5 Response Time Test. Introduce zero gas into the measurement system at the

calibration valve assembly. When the system output has stabilized, switch quickly to the high-level calibration gas. Record the time from the concentration change to the measurement system response equivalent to 95 percent of the step change. Repeat the test three times and average the results.

7. *Emission Measurement Test Procedure*

7.1 Organic Measurement. Begin sampling at the start of the test period, recording time and any required process information as appropriate. In particular, note on the recording chart periods of process interruption or cyclic operation.

7.2 Drift Determination. Immediately following the completion of the test period and hourly during the test period, reintroduce the zero and mid-level calibration gases, one at a time, to the measurement system at the calibration valve assembly. (Make no adjustments to the measurement system until after both the zero and calibration drift checks are made.) Record the analyzer response. If the drift values exceed the specified limits, invalidate the test results preceding the check and repeat the test following corrections to the measurement system. Alternatively, recalibrate the test measurement system as in Section 6.4 and report the results using both sets of calibration data (i.e., data determined prior to the test period and data determined following the test period).

8. *Organic Concentration Calculations*

Determine the average organic concentration in terms of ppmv as propane or other calibration gas. The average shall be determined by the integration of the output recording over the period specified in the applicable regulation.

If results are required in terms of ppmv as carbon, adjust measured concentrations using Equation 25A–1.

$$C_c = K\ C_{meas} \qquad \text{Eq. 25A–1}$$

Where:

C_c=Organic concentration as carbon, ppmv.

C_{meas}=Organic concentration as measured, ppmv.

K=Carbon equivalent correction factor,

K=2 for ethane.

K=3 for propane.

K=4 for butane.

K=Appropriate response factor for other organic calibration gases.

9. *Bibliography*

1. Measurement of Volatile Organic Compounds—Guideline Series. U.S. Environmental Protection Agency. Research Triangle Park, NC. Publication No. EPA–450/2–78–041. June 1978. p. 46–54.

2. Traceability Protocol for Establishing True Concentrations of Gases Used for Calibration and Audits of Continuous Source Emission Monitors (Protocol No. 1). U.S. Environmental Protection Agency, Environmental Monitoring and Support Laboratory. Research Triangle Park, NC. June 1978.

3. Gasoline Vapor Emission Laboratory Evaluation—Part 2. U.S. Environmental Protection Agency, Office of Air Quality Planning and Standards. Research Triangle Park, NC. EMB Report No. 75–GAS–6. August 1975.

METHOD 25B—DETERMINATION OF TOTAL GASEOUS ORGANIC CONCENTRATION USING A NONDISPERSIVE INFRARED ANALYZER

1. *Applicability and Principle*

1.1 Applicability. This method applies to the measurement of total gaseous organic concentration of vapors consisting primarily of alkanes. (Other organic materials may be measured using the general procedure in this method, the appropriate calibration gas, and an analyzer set to the appropriate absorption band.) The concentration is expressed in terms of propane (or other appropriate organic calibration gas) or in terms of carbon.

1.2 Principle. A gas sample is extracted from the source through a heated sample line, if necessary, and glass fiber filter to a nondispersive infrared analyzer (NDIR). Results are reported as volume concentration equivalents of the calibration gas or as carbon equivalents.

2. *Definitions*

The terms and definitions are the same as for Method 25A.

3. *Apparatus*

The apparatus is the same as for Method 25A with the exception of the following:

3.1 Organic Concentration Analyzer. A nondispersive infrared analyzer designed to measure alkane organics and capable of meeting or exceeding the specifications in this method.

4. *Calibration Gases*

The calibration gases are the same as required for Method 25A, Section 4. No fuel gas is required for an NDIR.

5. *Measurement System Performance Specifications*

5.1 Zero Drift. Less than ±3 percent of the span value.

5.2 Calibration Drift. Less than ±3 percent of the span value.

5.3 Calibration Error. Less than ±5 percent of the calibration gas value.

6. *Pretest Preparations*

6.1 Selection of Sampling Site. Same as in Method 25A, Section 6.1.

6.2 Location of Sample Probe. Same as in Method 25A, Section 6.2.

6.3 Measurement System Preparation. Prior to the emission test, assemble the measurement system following the manufacturer's written instructions in preparing the sample interface and the organic analyzer. Make the system operable.

6.4 Calibration Error Test. Same as in Method 25A, Section 6.4.

6.5 Response Time Test Procedure. Same as in Method 25A, Section 6.5.

7. *Emission Measurement Test Procedure*

Proceed with the emission measurement immediately upon satisfactory completion of the calibration.

7.1 Organic Measurement. Same as in Method 25A, Section 7.1.

7.2 Drift Determination. Same as in Method 25A, Section 7.2.

8. *Organic Concentration Calculations*

The calculations are the same as in Method 25A, Section 8.

9. *Bibliography*

The bibliography is the same as in Method 25A.

METHOD 25C—DETERMINATION OF NONMETHANE ORGANIC COMPOUNDS (NMOC) IN MSW LANDFILL GASES

1. Applicability and Principle

1.1 Applicability. This method is applicable to the sampling and measurement of nonmethane organic compounds (NMOC) as carbon in MSW landfill gases.

1.2 Principle. A sample probe that has been perforated at one end is driven or augered to a depth of 1.0 meter below the bottom of the landfill cover. A sample of the landfill gas is extracted with an evacuated cylinder. The NMOC content of the gas is determined by injecting a portion of the gas into a gas chromatographic column to separate the NMOC from carbon monoxide (CO), carbon dioxide (CO_2), and methane (CH_4); the NMOC are oxidized to CO_2, reduced to CH_4, and measured by a flame ionization detector (FID). In this manner, the variable response of the FID associated with different types of organics is eliminated.

2. Apparatus

2.1 Sample Probe. Stainless steel, with the bottom third perforated. The sample probe shall be capped at the bottom and shall have a threaded cap with a sampling attachment at the top. The sample probe shall be long enough to go through and extend no less than 1.0 meter below the landfill cover. If the sample probe is to be driven into the landfill, the bottom cap should be designed to facilitate driving the probe into the landfill.

2.2 Sampling Train.

2.2.1 Rotameter with Flow Control Valve. Capable of measuring a sample flow rate of 500 ml/min or less (30.5±3.1 m^3/min). The control valve shall be made of stainless steel.

2.2.2 Sampling Valve. Stainless steel.

2.2.3 Pressure Gauge. U-tube mercury manometer, or equivalent, capable of measuring pressure to within 1 mm Hg in the range of 0 to 1,100 mm Hg.

2.2.4 Sample Tank. Stainless steel or aluminum cylinder, with a minimum volume of 4 liters and equipped with a stainless steel sample tank valve.

2.3 Vacuum Pump. Capable of evacuating to an absolute pressure of 10 mm Hg.

2.4 Purging Pump. Portable, explosion proof, and suitable for sampling NMOC.

2.5 Pilot Probe Procedure. The following are needed only if the tester chooses to use the procedure described in section 4.2.1.

2.5.1 Pilot Probe. Tubing of sufficient strength to withstand being driven into the landfill by a post driver and an outside diameter of at least 6.0 millimeters smaller than the sample probe. The pilot probe shall be capped on both ends and long enough to go through the landfill cover and extend no less than 1.0 meter into the landfill.

2.5.2 Post Driver and Compressor. Capable of driving the pilot probe and the sampling probe into the landfill.

2.6 Auger Procedure. The following are needed only if the tester chooses to use the procedure described in section 4.2.2.

2.6.1 Auger. Capable of drilling through the landfill cover and to a depth of no less than 0.9 meters into the landfill.

2.6.2 Pea Gravel.

2.6.3 Bentonite.

2.7 NMOC Analyzer, Barometer, Thermometer, and Syringes. Same as in sections 2.3, 2.4.1, 2.4.2, 2.4.4, respectively, of Method 25.

3. Reagents

3.1 NMOC Analysis. Same as in Method 25, section 3.2.

3.2 Calibration. Same as in Method 25, section 3.4, except omit section 3.4.3.

4. Procedure

4.1 Sample Tank Evacuation and Leak Check. Conduct the sample tank evacuation and leak check either in the laboratory or the field. Connect the pressure gauge and sampling valve to the sample tank. Evacuate the sample tank to 10 mm Hg absolute pressure or less. Close the sampling valve, and allow the tank to sit for 60 minutes. The tank is acceptable if no change is noted. Include the results of the leak check in the test report.

4.2 Sample Probe Installation. The tester may use the procedure in sections 4.2.1 or 4.2.2. CAUTION: Since this method is complex, only experienced personnel should perform this test. LFG contains methane, therefore explosive mixtures may exist on or near the landfill. It is advisable to take appropriate safety precautions when testing landfills, such as refraining from smoking and installing explosion-proof equipment.

4.2.1 Pilot Probe Procedure. Use the post driver to drive the pilot probe at least 1.0 meter below the landfill cover. Alternative procedures to drive the probe into the landfill may be used subject to the approval of the Administrator.

Remove the pilot probe and drive the sample probe into the hole left by the pilot probe. The sample probe shall extend not less than 1.0 meter below the landfill cover and shall protrude about 0.3 meters above the landfill cover. Seal around the sampling probe with bentonite and cap the sampling probe with the sampling probe cap.

4.2.2 Auger Procedure. Use an auger to drill a hole through the landfill cover and to at least 1.0 meter below the landfill cover. Place the sample probe in the hole and backfill with pea gravel to a level 0.6 meters from the surface. The sample probe shall protrude at least 0.3 meters above the landfill cover. Seal the remaining area around the probe with bentonite. Allow 24 hours for the landfill gases to equilibrate inside the augered probe before sampling.

4.3 Sample Train Assembly. Prepare the sample by evacuating and filling the sample tank with helium three times. After the third evacuation, charge the sample tank with helium to a pressure of approximately 325 mm Hg. Record the pressure, the ambient temperature, and the barometric pressure. Assemble the sampling probe purging system as shown in figure 1.

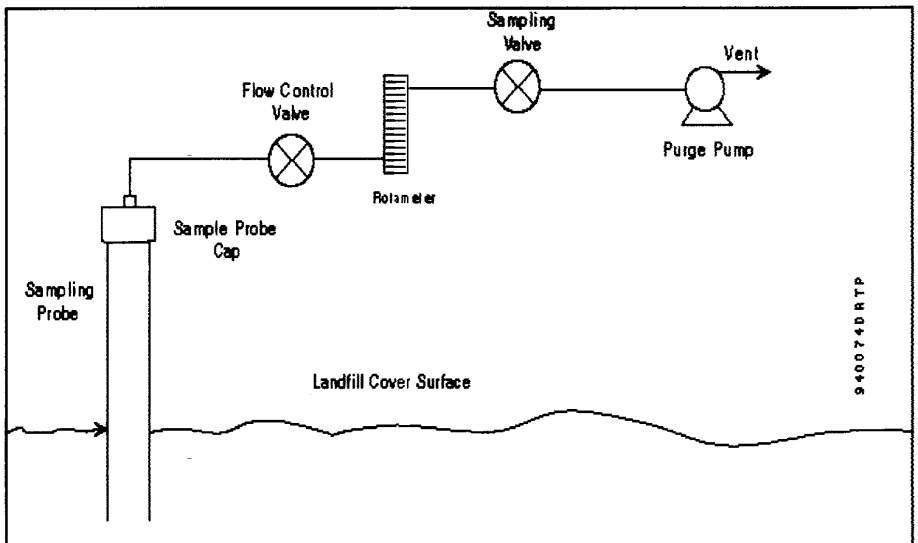

Figure 1. Schematic of sampling probe purging system.

4.4 Sampling Procedure. Open the sampling valve and use the purge pump and the flow control valve to evacuate at least two sample probe volumes from the system at a flow rate of 500 ml/min or less (30.5±3.1 m^3/min). Close the sampling valve and replace the purge pump with the sample tank apparatus as shown in figure 2. Open the sampling valve and the sample tank valves and, using the flow control valve, sample at a flow rate of 500 ml/min or less (30.5±3.1 m^3/min) until the sample tank gauge pressure is zero. Disconnect the sampling tank apparatus and use the carrier gas bypass valve to pressurize the sample cylinder to approximately 1,060 mm Hg absolute pressure with helium and record the final pressure. Alternatively, the sample tank may be pressurized in the lab. If not analyzing for N_2, the sample cylinder may be pressurized with zero air. Use Method 3C to determine the percent N_2 in the sample. Presence of N_2 indicates infiltration of ambient air into the gas sample. The landfill sample is acceptable if the concentration of N_2 is less than 20 percent.

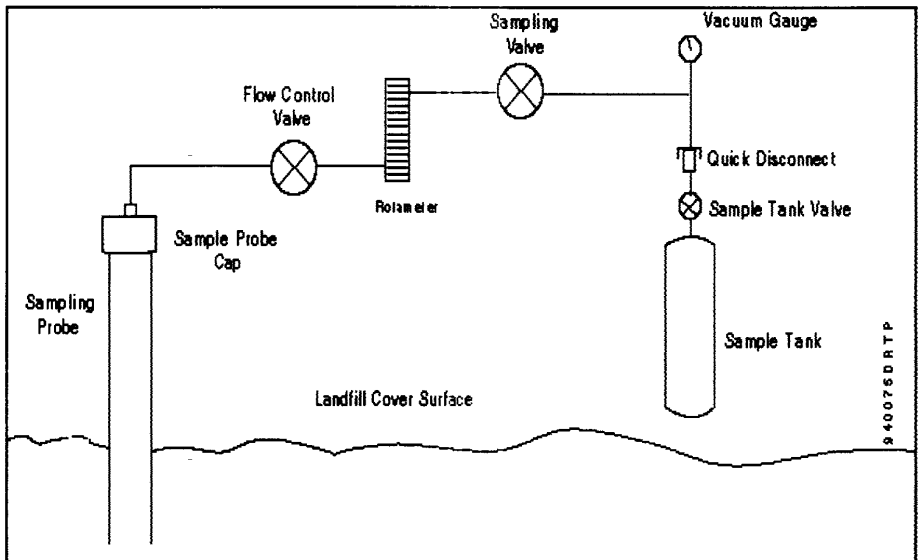

Figure 2. Schematic of sampling train.

4.5 Analysis. The oxidation, reduction, and measurement of NMOC is similar to Method 25. Before putting the NMOC analyzer into routine operation, conduct an initial performance test. Start the analyzer, and perform all the necessary functions to put the analyzer into proper working order. Conduct the performance test according to the procedures established in section 5.1. Once the performance test has been successfully completed and the NMOC calibration response factor has been determined, proceed with sample analysis as follows:

4.5.1 Daily Operations and Calibration Checks. Before and immediately after the analysis of each set of samples or on a daily basis (whichever occurs first), conduct a calibration test according to the procedures established in section 5.2. If the criteria of the daily calibration test cannot be met, repeat the NMOC analyzer performance test (section 5.1) before proceeding.

4.5.2 Operating Conditions. Same as in Method 25, section 4.4.2.

4.5.3 Analysis of Sample Tank. Purge the sample loop with sample, and then inject the sample. Under the specified operating conditions, the CO_2 in the sample will elute in approximately 100 seconds. As soon as the detector response returns to baseline following the CO_2 peak, switch the carrier gas flow to backflush, and raise the column oven temperature to 195 °C as rapidly as possible. A rate of 30 °C/min has been shown to be adequate. Record the value obtained for any measured NMOC. Return the column oven temperature to 85 °C in preparation for the next analysis. Analyze each sample in triplicate, and report the average as C_{tm}.

4.6 Audit Samples. Same as in Method 25, section 4.5.

4.7 Deactivation of Sample Probe Holes. Once sampling has taken place, either plug the sampling probes with a cap or remove the probes and refill the hole with cover material.

5. Calibration and Operational Checks

Maintain a record of performance of each item.

5.1 Initial NMOC Analyzer Performance Test. Same as in Method 25, section 5.2, except omit the linearity checks for CO_2 standards.

5.2 NMOC Analyzer Daily Calibration. NMOC response factors, same as in Method 25, section 5.3.2.

6. Calculations

All equations are written using absolute pressure; absolute pressures are determined by adding the measured barometric pressure to the measured gauge of manometer pressure.

6.1 Nomenclature.

B_w=moisture content in the sample, fraction

C_{N2}=measured N_2 concentration, fraction

C_t=calculated NMOC concentration, ppmv C equivalent
C_{tm}=measured NMOC concentration, ppmv C equivalent
P_b=barometric pressure, mm Hg
P_{ti}=gas sample tank pressure before sampling, mm Hg absolute
P_t=gas sample tank pressure at completion of sampling, but before pressurizing, mm Hg absolute
P_{tf}=final gas sample tank pressure after pressurizing, mm Hg absolute
P_w=vapor pressure of H_2O (from table 25C–1), mm Hg
T_{ti}=sample tank temperature before sampling, °K
T_t=sample tank temperature at completion of sampling, but before pressuring, °K
T_{tf}=sample tank temperature after pressurizing, °K
r=total number of analyzer injections of sample tank during analysis (where j=injection number, 1. . .r)

6.2 Water Correction. Use table 25C–1, the LFG temperature, and barometric pressure at the sampling site to calculate B_w.

$$B_w = \frac{P_w}{P_b}$$

TABLE 25C–1.—MOISTURE CORRECTION

Temperature, °C	Vapor Pressure of H_2O, mm Hg
4	6.1
6	7.0
8	8.0
1	9.2
12	10.5
14	12.0
16	13.6
18	15.5
20	17.5
22	19.8
24	22.4
26	25.2
28	28.3
30	31.8

6.3 NMOC Concentration. Use the following equation to calculate the concentration of NMOC for each sample tank.

$$C_t = \frac{\dfrac{P_{tf}}{T_{tf}}}{\dfrac{P_t}{T_t} - \dfrac{P_{ti}}{T_{ti}}} \; \frac{1}{\left(1 - B_w - C_{N2}\right) r} \sum_{j=1}^{r} C_{tm}^{(j)}$$

7. Bibliography

1. Salon, Albert E., Samuel Witz, and Robert D. MacPhee. Determination of Solvent Vapor Concentrations by Total Combustion Analysis: A Comparison of Infrared with Flame Ionization Detectors. Paper No. 75–33.2. (Presented at the 68th Annual Meeting of the Air Pollution Control Association. Boston, Massachusetts. June 15–20, 1975.) p. 14.

2. Salon, Albert E., William L. Oaks, and Robert D. MacPhee. Measuring the Organic Carbon Content of Source Emissions for Air Pollution Control. Paper No. 74–190. (Presented at the 67th Annual Meeting of the Air Pollution Control Association. Denver, Colorado. June 9–13, 1974.) p. 25.

METHOD 25D—DETERMINATION OF THE VOLATILE ORGANIC CONCENTRATION OF WASTE SAMPLES

Introduction

Performance of this method should not be attempted by persons unfamiliar with the operation of a flame ionization detector (FID) or an electrolytic conductivity detector (ELCD) because knowledge beyond the scope of this presentation is required.

1. Applicability and Principle

1.1 Applicability. This method is applicable for determining the volatile organic (VO) concentration of a waste sample.

1.2 Principle. A sample of waste is obtained at a point which is most representative of the unexposed waste (where the waste has had minimum opportunity to volatilize to the atmosphere). The sample is suspended in an organic/aqueous matrix, then heated and purged with nitrogen for 30 min in order to separate certain organic compounds. Part of the sample is analyzed for carbon concentration, as methane, with an FID, and part of the sample is analyzed for chlorine concentration, as chloride, with an ELCD. The VO concentration is the sum of the carbon and chlorine content of the sample.

2. Apparatus

2.1 Sampling. The following equipment is required:

2.1.1 Sampling Tube. Flexible Teflon, 0.25 in. ID.

NOTE: Mention of trade names or specific products does not constitute endorsement by the Environmental Protection Agency.

2.1.2 Sample Container. Borosilicate glass, 40 mL, and a Teflon lined screw cap capable of forming an air tight seal.

2.1.3 Cooling Coil. Fabricated from 0.25 in. ID 304 stainless steel tubing with a thermocouple at the coil outlet.

2.2 Analysis. The following equipment is required:

2.2.1 Purging Apparatus. For separating the VO from the waste sample. A schematic of the system is shown in Figure 25D–1. The purging apparatus consists of the following major components.

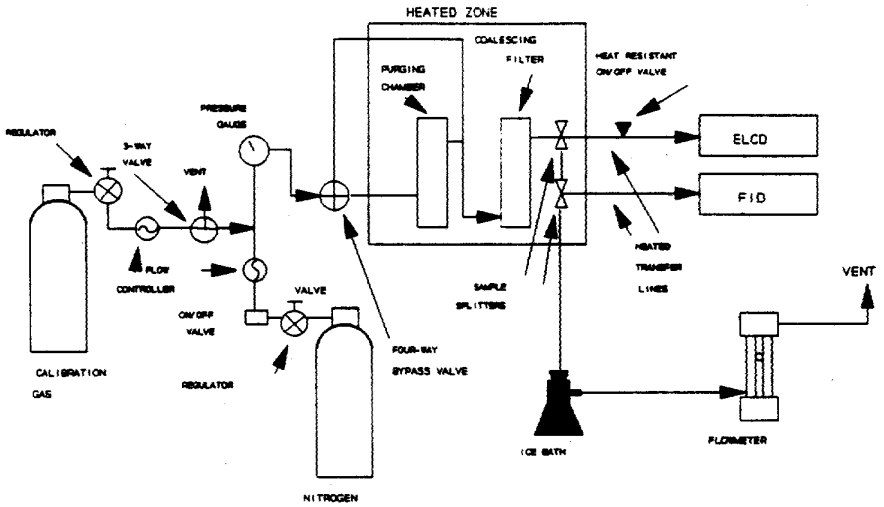

Figure 25D-1. Schematic of Purging Apparatus.

2.2.1.1 Purging Flask. A glass container to hold the sample while it is heated and purged with dry nitrogen. The cap of the purging flask is equipped with three fittings: one for a purging lance (fitting with the #7 Ace-thread), one for the Teflon exit tubing (side fitting, also a #7 Ace-thread), and a third (a 50-mm Ace-thread) to attach the base of the purging flask as shown in Figure 25D–2. The base of the purging flask is a 50-mm ID cylindrical glass tube. One end of the tube is open while the other end is sealed. Exact dimensions are shown in Figure 25D–2.

2.2.1.2 Purging Lance. Glass tube, 6-mm OD by 30 cm long. The purging end of the tube is fitted with a four-arm bubbler with each tip drawn to an opening 1 mm in diameter.

Details and exact dimensions are shown in Figure 25D–2.

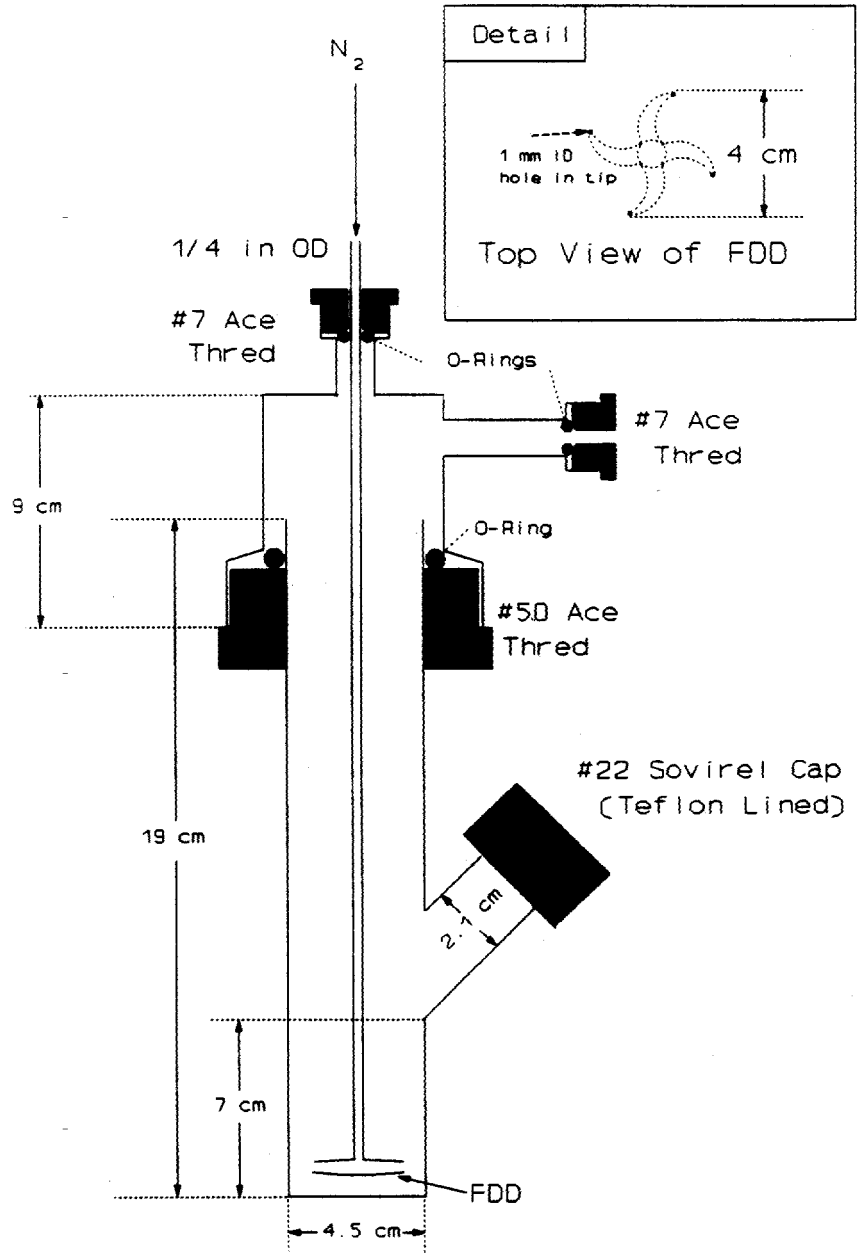

Figure 25D-2. Schematic of Purge Chamber

2.2.1.3 Coalescing Filter. Porous fritted disc incorporated into a container with the same dimensions as the purging flask. The details of the design are shown in Figure 25D–3.

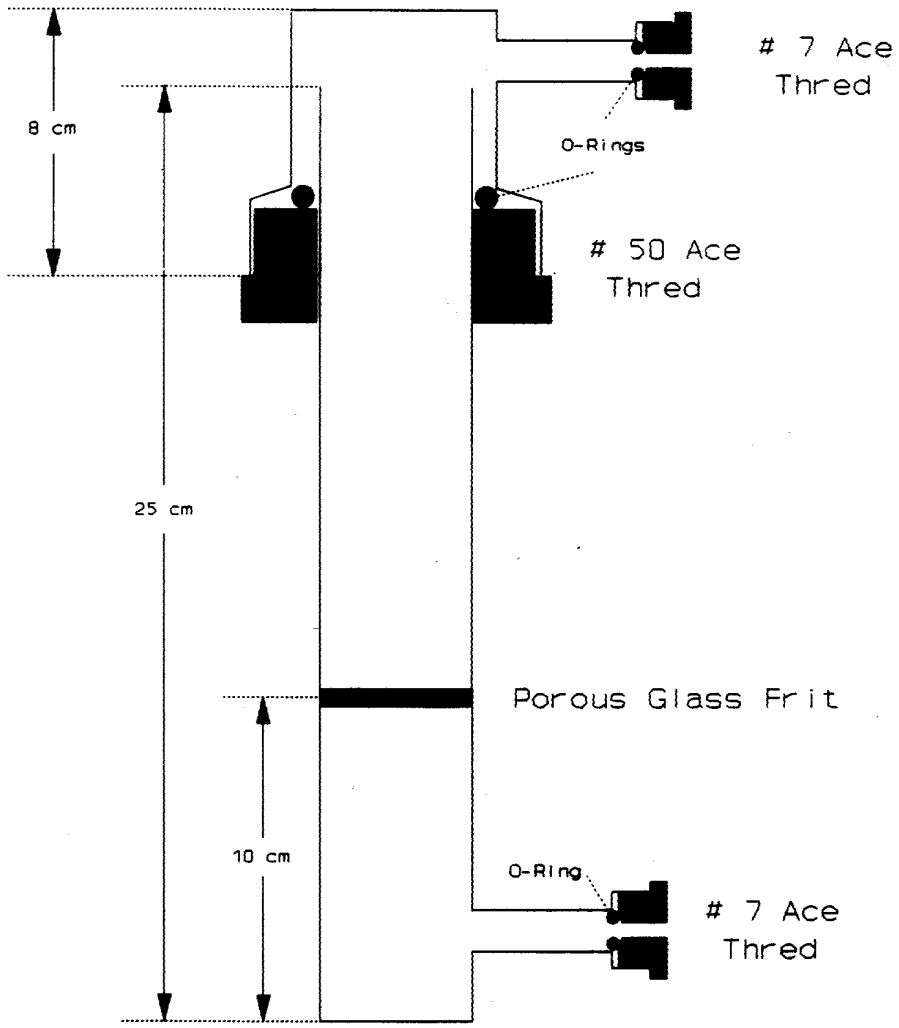

Figure 25D-3. Schematic of Coalescing Filter

2.2.1.4 Constant Temperature Chamber. A forced draft oven capable of maintaining a uniform temperature around the purging flask and coalescing filter of 75±2 °C.

2.2.1.5 Three-way Valve. Manually operated, stainless steel. To introduce calibration gas into system.

2.2.1.6 Flow Controllers. Two, adjustable. One capable of maintaining a purge gas flow

rate of 6±.06 L/min. The other capable of maintaining a calibration gas flow rate of 1–100 mL/min.

2.2.1.7 Rotameter. For monitoring the air flow through the purging system (0–10 L/min).

2.2.1.8 Sample Splitters. Two heated flow restrictors (placed inside oven or heated to 120±10 °C). At a purge rate of 6 L/min, one will supply a constant flow to the first detector (the rest of the flow will be directed to the second sample splitter). The second splitter will split the analytical flow between the second detector and the flow restrictor. The approximate flow to the FID will be 40 mL/min and to the ELCD will be 15 mL/min, but the exact flow must be adjusted to be compatible with the individual detector and to meet its linearity requirement. The two sample splitters will be connected to each other by ⅛″ OD stainless steel tubing.

2.2.1.9 Flow Restrictor. Stainless steel tubing, ⅛″ OD, connecting the second sample splitter to the ice bath. Length is determined by the resulting pressure in the purging flask (as measured by the pressure gauge). The resulting pressure from the use of the flow restrictor shall be 6–7 psiG.

2.2.1.10 Filter Flask. With one-hole stopper. Used to hold ice bath. Excess purge gas is vented through the flask to prevent condensation in the flowmeter and to trap volatile organic compounds.

2.2.1.11 Four-way Valve. Manually operated, stainless steel. Placed inside oven, used to bypass purging flask.

2.2.1.12 On/Off Valves. Two, stainless steel. One heat resistant up to 130 °C and placed between oven and ELCD. The other a toggle valve used to control purge gas flow.

2.2.1.13 Pressure Gauge. Range 0–40 psi. To monitor pressure in purging flask and coalescing filter.

2.2.1.14 Sample Lines. Teflon®, 1/4≤″ OD, used inside the oven to carry purge gas to and from purging chamber and to and from coalescing filter to four-way valve. Also used to carry sample from four-way valve to first sample splitter.

2.2.1.15 Detector Tubing. Stainless steel, ⅛″ OD, heated to 120±10 °C. Used to carry sample gas from each sample splitter to a detector. Each piece of tubing must be wrapped with heat tape and insulating tape in order to insure that no cold spots exist. The tubing leading to the ELCD will also contain a heat-resistant on-off valve (Section 2.2.1.12) which shall also be wrapped with heat-tape and insulation.

2.2.2 Volatile Organic Measurement System. Consisting of an FID to measure the carbon concentration of the sample and an ELCD to measure the chlorine concentration.

2.2.2.1 FID. A heated FID meeting the following specifications is required.

2.2.2.1.1 Linearity. A linear response (+ 5 percent) over the operating range as demonstrated by the procedures established in Section 5.1.1.

2.2.2.1.2 Range. A full scale range of 50 pg carbon/sec to 50 µKg carbon/sec. Signal attenuators shall be available to produce a minimum signal response of 10 percent of full scale.

2.2.2.1.3 Data Recording System. A digital integration system compatible with the FID for permanently recording the output of the detector. The recorder shall have the capability to start and stop integration at points selected by the operator or it shall be capable of the ''integration by slices'' technique (this technique involves breaking down the chromatogram into smaller increments, integrating the area under the curve for each portion, subtracting the background for each portion, and then adding all of the areas together for the final area count).

2.2.2.2 ELCD. An ELCD meeting the following specifications is required. The ELCD components shall consist of quartz reactor tubing and 1-propanol as electrolyte. The electrolyte flow through the conductivity cell shall be 1 to 2 mL/min.

NOTE: A ¼-in. ID quartz reactor tube is recommended to reduce carbon buildup and the resulting detector maintenance.

2.2.2.2.1 Linearity. A linear response (± 10 percent) over the response range as demonstrated by the procedures in Section 5.1.2.

2.2.2.2.2 Range. A full scale range of 5.0 pg/sec to 500 ng/sec chloride. Signal attenuators shall be available to produce a minimum signal response of 10 percent of full scale.

2.2.2.2.3 Data Recording System. A digital integration system compatible with the output voltage range of the ELCD. The recorder must have the capability to start and stop integration at points selected by the operator or it shall be capable of performing the ''integration by slices'' technique.

3. Reagents

3.1 Sampling.

3.1.1 Polyethylene Glycol (PEG). Ninety-eight percent pure with an average molecular weight of 400. Before using the PEG, remove any organic compounds that might be detected as volatile organics by heating it to 120 °C and purging it with nitrogen at a flow rate of 1 to 2 L/min for 2 hours. The cleaned PEG must be stored under a 1 to 2 L/min nitrogen purge until use. The purge apparatus is shown in Figure 25D–4.

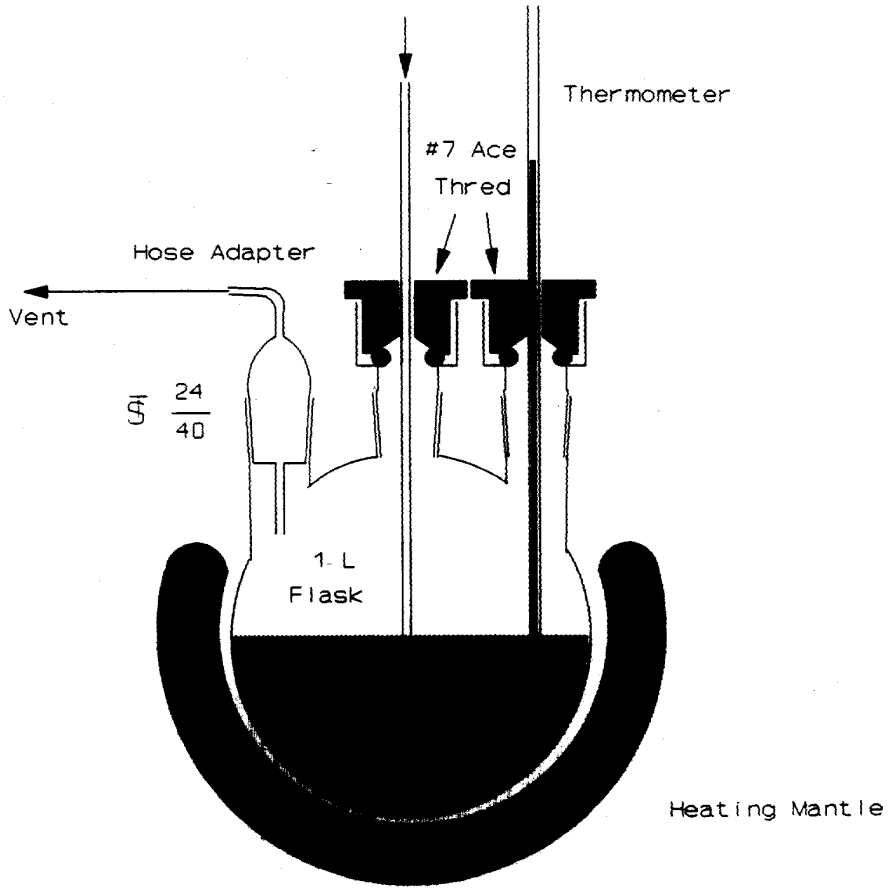

Figure 25D-4. Schematic of PEG Cleaning System

3.2 Analysis.

3.2.1 Sample Separation. The following are required for the sample purging step.

3.2.1.1 PEG. Same as Section 3.1.1.

3.2.1.2 Purge Gas. Zero grade nitrogen (N_2), containing less than 1 ppm carbon.

3.2.2 Volatile Organics Measurement. The following are required for measuring the VO concentration.

3.2.2.1 Hydrogen (H_2). Zero grade H_2, 99.999 percent pure.

3.2.2.2 Combustion Gas. Zero grade air or oxygen as required by the FID.

3.2.2.3 Calibration Gas. Pressurized gas cylinder containing 10 percent propane and 1 percent 1,1-dichloroethylene by volume in nitrogen.

3.2.2.4 Water. Deionized distilled water that conforms to American Society for Testing and Materials Specification D 1193–77, Type 3 (incorporated by reference as specified in §60.17), is required for analysis. At the option of the analyst, the $KMnO_4$ test for oxidizable organic matter may be omitted when high concentrations are not expected to be present.

3.2.2.5 1–Propanol. ACS grade or better. Electrolyte Solution. For use in the ELCD.

4. Procedure

4.1 Sampling.

4.1.1 Sampling Plan Design and Development. Use the procedures in chapter nine of the Office of Solid Waste's publication, *Test Methods for Evaluating Solid Waste,* third edition (SW–846), as guidance in developing a sampling plan.

4.1.2 Single Phase or Well-mixed Waste. Well-mixed in the context of this method refers to turbulent flow which results in multiple-phase waste in effect behaving as single-phase waste due to good mixing.

4.1.2.1 Install a sampling tap to obtain the sample at a point which is most representative of the unexposed waste (where the waste has had minimum opportunity to volatilize to the atmosphere). Assemble the sampling apparatus as shown in Figure 25D–5.

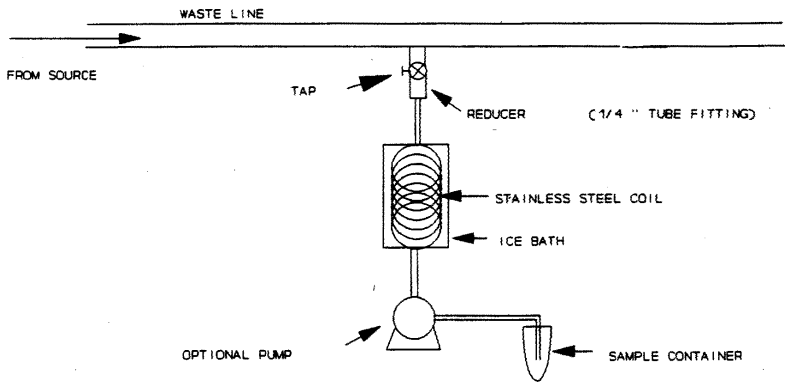

Figure 25D-5. Schematic of Sampling Apparatus.

4.1.2.2 Prepare the sampling containers as follows: Pour 30 mL of clean PEG into the container. PEG will reduce but not eliminate the loss of organics during sample collection. Weigh the sample container with the screw cap, the PEG, and any labels to the nearest 0.01 g and record the weight (m_{st}). Store the containers in an ice bath until 1 h before sampling (PEG will solidify at ice bath temperatures; allow the containers to reach room temperature before sampling).

4.1.2.3 Begin sampling by purging the sample lines and cooling coil with at least four volumes of waste. Collect the purged material in a separate container and dispose of it properly.

4.1.2.4 After purging, stop the sample flow and direct the sampling tube to a preweighed sample container, prepared as described in Section 4.1.2.2. Keep the tip of the tube below the surface of the PEG during sampling to minimize contact with the atmosphere. Sample at a flow rate such that the temperature of the waste is less than 10 °C. Fill the sample container and immediately cap it (within 5 seconds) so that a minimum headspace exists in the container. Store immediately in a cooler and cover with ice.

4.1.3 Multiple-phase Waste. Collect a 10 g sample of each phase of waste generated using the procedures described in Section 4.1.2 or 4.1.5. Each phase of the waste shall be analyzed as a separate sample. Calculate the weighted average VO concentration of the waste using Equation 13 (Section 6.14).

4.1.4 Solid waste. Add approximately 10 g of the solid waste to a container prepared in the manner described in Section 4.1.2.2, minimizing headspace. Cap and chill immediately.

4.1.5 Alternative to Tap Installation. If tap installation is impractical or impossible, fill a large, clean, empty container by submerging the container into the waste below the surface of the waste. Immediately fill a container prepared in the manner described in Section 4.1.2.2 with approximately 10 g of the waste collected in the large container. Minimize headspace, cap and chill immediately.

4.1.6 Alternative sampling techniques may be used upon the approval of the Administrator.

4.2 Sample Recovery.

4.2.1 Assemble the purging apparatus as shown in Figures 25D–1 and 25D–2. The oven

shall be heated to 75 ± 2 °C. The sampling lines leading from the oven to the detectors shall be heated to 120 ± 10 °C with no cold spots. The flame ionization detector shall be operated with a heated block. Adjust the purging lance so that it reaches the bottom of the chamber.

4.2.2 Remove the sample container from the cooler, and wipe the exterior of the container to remove any extraneous ice, water, or other debris. Reweigh the sample container to the nearest 0.01 g, and record the weight (m_{sf}). Pour the contents of the sample container into the purging flask, rinse the sample container three times with a total of 20 mL of PEG (since the sample container originally held 30 mL of PEG, the total volume of PEG added to the purging flask will be 50 mL), transferring the rinsings to the purging flask after each rinse. Cap purging flask between rinses. The total volume of PEG in the purging flask shall be 50 mL. Add 50 mL of water to the purging flask.

4.3 Sample Analysis.

4.3.1 Turn on the constant temperature chamber and allow the temperature to equilibrate at 75 ± 2 °C. Turn the four-way valve so that the purge gas bypasses the purging flask, the purge gas flowing through the coalescing filter and to the detectors (standby mode). Turn on the purge gas. Allow both the FID and the ELCD to warm up until a stable baseline is achieved on each detector. Pack the filter flask with ice. Replace ice after each run and dispose of the waste water properly. When the temperature of the oven reaches 75±2 °C, start both integrators and record baseline. After 1 min, turn the four-way valve so that the purge gas flows through the purging flask, to the coalescing filter and to the sample splitters (purge mode). Continue recording the response of the FID and the ELCD. Monitor the readings of the pressure gauge and the rotameter. If the readings fall below established setpoints, stop the purging, determine the source of the leak, and resolve the problem before resuming. Leaks detected during a sampling period invalidate that sample.

4.3.2 As the purging continues, monitor the output of the detectors to make certain that the analysis is proceeding correctly and that the results are being properly recorded. Every 10 minutes read and record the purge flow rate, the pressure and the chamber temperature. Continue the purging for 30 minutes.

4.3.3 For each detector output, integrate over the entire area of the peak starting at 1 minute and continuing until the end of the run. Subtract the established baseline area from the peak area. Record the corrected area of the peak. See Figure 25D–6 for an example integration.

4.4 Water Blank. A water blank shall be analyzed for each batch of cleaned PEG prepared. Transfer about 60 mL of water into the purging flask. Add 50 mL of the cleaned PEG to the purging flask. Treat the blank as described in Sections 4.2 and 4.3, excluding Section 4.2.2. Calculate the concentration of carbon and chlorine in the blank sample (assume 10 g of waste as the mass). A VO concentration equivalent to ≤10 percent of the applicable standard may be subtracted from the measured VO concentration of the waste samples. Include all blank results and documentation in the test report.

5. Operational Checks and Calibration.

Maintain a record of performance of each item.

5.1 Initial Performance Check of Purging System.

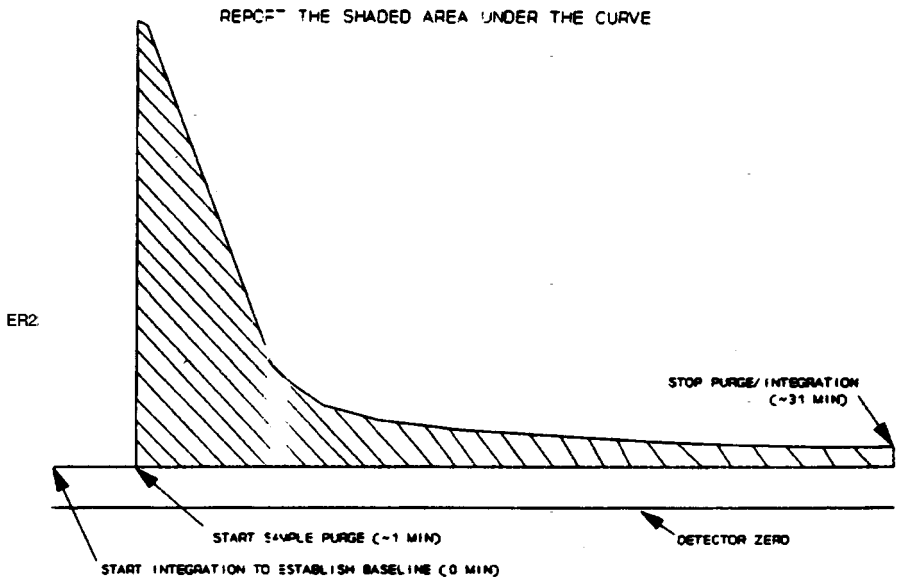

Figure 25D-6. Example integration for either detector.

Before placing the system in operation, after a shutdown of greater than six months, after any major modifications, and at least once per month during continuous operation, conduct the linearity checks described in Sections 5.1.1 and 5.1.2. Install calibration gas at the three-way calibration gas valve. See Figure 25D–1.

5.1.1 Linearity Check Procedure. Using the calibration standard described in Section 3.2.2.3 and by varying the injection time, it is possible to calibrate at multiple concentration levels. Use Equation 3 to calculate three sets of calibration gas flow rates and run times needed to introduce a total methane mass (m_{co}) of 1, 5, and 10 mg into the system (low, medium and high FID calibration, respectively). Use Equation 4 to calculate three sets of calibration gas flow rates and run times needed to introduce a total chloride mass (m_{ch}) of 1, 5, and 10 mg into the system (low, medium and high ELCD calibration, respectively). With the system operating in standby mode, allow the FID and the ELCD to establish a stable baseline. Set the secondary pressure regulator of the calibration gas cylinder to the same pressure as the purge gas cylinder and set the proper flow rate with the calibration flow controller (see Figure 25D–1). The calibration gas flow rate can be measured with a flowmeter attached to the vent position of the calibration gas valve. Set the four-way bypass valve to standby position so that the calibration gas flows through the coalescing filter only. Inject the calibration gas by turning the calibration gas valve from vent position to inject position. Continue the calibration gas flow for the appropriate period of time before switching the calibration valve to vent position. Continue recording the response of the FID and the ELCD for 5 min after switching off calibration gas flow. Make triplicate injections of all six levels of calibration.

5.1.2 Linearity Criteria. Calculate the average response factor (Equations 5 and 6) and the relative standard deviation (RSD) (Equation 10) at each level of the calibration curve for both detectors. Calculate the overall mean of the three response factor averages for each detector. The FID linearity is acceptable if each response factor is within 5 percent of the overall mean and if the RSD for each set of triplicate injections is less than 5 percent. The ELCD linearity is acceptable if each response factor is within 10 percent of the overall mean and if the RSD for each set of triplicate injections is less than 10 percent. Record the overall mean value of the response factors for the FID and the ELCD. If the calibration for either the FID or the ELCD does not meet the criteria, correct the detector/system problem and repeat Sections 5.1.1 and 5.1.2.

5.2 Daily Calibrations.

5.2.1 Daily Linearity Check. Follow the procedures outlined in Section 5.1.1 to analyze the medium level calibration for both the FID and the ELCD in duplicate at the start of the day. Calculate the response factors and the RSDs for each detector. For the FID, the calibration is acceptable if the average response factor is within 5 percent of the overall mean response factor (Section 5.1.2) and if the RSD for the duplicate injection is less than 5 percent. For the ELCD, the calibration is acceptable if the average response factor is within 10 percent of the overall mean response factor (Section 5.1.2) and if the RSD for the duplicate injection is less than 10 percent. If the calibration for either the FID or the ELCD does not meet the criteria, correct the detector/system problem and repeat Sections 5.1.1 and 5.1.2.

5.2.2 Calibration Range Check.

5.2.2.1 If the waste concentration for either detector falls below the range of calibration for that detector, use the procedure outlined in Section 5.1.1 to choose 2 calibration points that bracket the new target concentration. Analyze each of these points in triplicate (as outlined in Section 5.1.1) and use the criteria in Section 5.1.2 to determine the linearity of the detector in this ''minicalibration'' range.

5.2.2.2 After the initial linearity check of the minicalibration curve, it is only necessary to test one of the points in duplicate for the daily calibration check (in addition to the points specified in Section 5.2.1). The average daily mini-calibration point should fit the linearity criteria specified in Section 5.2.1. If the calibration for either the FID or the ELCD does not meet the criteria, correct the detector/system problem and repeat the calibration procedure mentioned in the first paragraph of Section 5.2.2. A mini-calibration curve for waste concentrations above the calibration curve for either detector is optional.

5.3 Analytical Balance. Calibrate against standard weights.

5.4 Audit Procedure. Concurrently analyze the audit sample and a set of compliance samples in the same manner to evaluate the technique of the analyst and the standards preparation. The same analyst, analytical reagents, and analytical system shall be used both for compliance samples and the EPA audit sample. If this condition is met, auditing of subsequent compliance analyses for the same enforcement agency within 30 days is not required. An audit sample set may not be used to validate different sets of compliance samples under the jurisdiction of different enforcement agencies, unless prior arrangements are made with both enforcement agencies.

5.5 Audit Samples. Audit Sample Availability. Audit samples will be supplied only to enforcement agencies for compliance tests. The availability of audit samples may be determined by writing: Source Test Audit Coordinator (MD–77B), Quality Assurance Division, Atmospheric Research and Exposure Assessment Laboratory, U.S. Environmental Protection Agency, Research Triangle Park, NC 27711 or by calling the Source Test Audit Coordinator (STAC) at (919) 541–7834. The request for the audit sample must be made at least 30 days prior to the scheduled compliance sample analysis. If audit samples are not available, follow the quality control sample procedures in Section 5.7.

5.6 Audit Results. Calculate the audit sample concentration according to the calculation procedure described in the audit instructions included with the audit sample. Fill in the audit sample concentration and the analyst's name on the audit response form included with the audit instructions. Send one copy to the EPA Regional Office or the appropriate enforcement agency and a second copy to the STAC. The EPA Regional office or the appropriate enforcement agency will report the results of the audit to the laboratory being audited. Include this response with the results of the compliance samples in relevant reports to the EPA Regional Office or the appropriate enforcement agency.

5.7 Quality Control Samples. If audit samples are not available, prepare and analyze the two types of quality control samples (QCS) listed in Sections 5.7.1 and 5.7.2. Before placing the system in operation, after a shutdown of greater than six months, and after any major modifications, analyze each QCS in triplicate. For each detector, calculate the percent recovery by dividing measured concentration by theoretical concentration and multiplying by 100. Determine the mean percent recovery for each detector for each QCS triplicate analysis. The RSD for any triplicate analysis shall be ≤10 percent. For QCS 1 (methylene chloride), the percent recovery shall be ≥90 percent for carbon as methane, and ≥55 percent for chlorine as chloride. For QCS 2 (1,3-dichloro-2-propanol), the percent recovery shall be ≤15 percent for carbon as methane, and ≤6 percent for chlorine as chloride. If the analytical system does not meet the above-mentioned criteria for both detectors, check the system parameters (temperature, system pressure, purge rate, etc.), correct the problem, and repeat the triplicate analysis of each QCS.

5.7.1 QCS 1, Methylene Chloride. Prepare a stock solution by weighing, to the nearest 0.1 mg, 55 µL of HPLC grade methylene chloride in a tared 5 mL volumetric flask. Record the weight in milligrams, dilute to 5 mL with cleaned PEG, and inject 100 µL of the stock solution into a sample prepared as a water blank (50 mL of cleaned PEG and 60 mL of water in the purging flask). Analyze

the QCS according to the procedures described in Sections 4.2 and 4.3, excluding Section 4.2.2. To calculate the theoretical carbon concentration (in mg) in QCS 1, multiply mg of methylene chloride in the stock solution by 3.777×10^{-3}. To calculate the theoretical chlorine concentration (in mg) in QCS 1, multiply mg of methylene chloride in the stock solution by 1.670×10^{-2}.

5.7.2 QCS 2, 1,3-dichloro-2-propanol. Prepare a stock solution by weighing, to the nearest 0.1 mg, 60 µL of high purity grade 1,3-dichloro-2-propanol in a tared 5 mL volumetric flask. Record the weight in milligrams, dilute to 5 mL with cleaned PEG, and inject 100 µL of the stock solution into a sample prepared as a water blank (50 mL of cleaned PEG and 60 mL of water in the purging flask).

Analyze the QCS according to the procedures described in Sections 4.2 and 4.3, excluding Section 4.2.2. To calculate the theoretical carbon concentration (in mg) in QCS 2, multiply mg of 1,3-dichloro-2-propanol in the stock solution by 7.461×10^{-3}. To calculate the theoretical chlorine concentration (in mg) in QCS 2, multiply mg of 1,3-dichloro-2-propanol in the stock solution by 1.099×10^{-2}.

5.7.3 Routine QCS Analysis. For each set of compliance samples (in this context, set is per facility, per compliance test), analyze one QCS 1 and one QCS 2 sample. The percent recovery for each sample for each detector shall be ± 13 percent of the mean recovery established for the most recent set of QCS triplicate analysis (Section 5.7). If the sample does not meet this criteria, check the system components and analyze another QCS 1 and 2 until a single set of QCS meet the ± 13 percent criteria.

6. Calculations

6.1 Nomenclature.

A_b=Area under the water blank response curve, counts.

A_c=Area under the calibration response curve, counts.

A_s=Area under the sample response curve, counts.

C=Concentration of volatile organics in the sample, ppmw.

C_c=Concentration of carbon, as methane, in the calibration gas, mg/L.

Ch_h=Concentration of chloride in the calibration gas, mg/L.

C_j=VO concentration of phase j, ppmw.

DR_t=Average daily response factor of the FID, mg CH_4 counts.

DR_{th}=Average daily response factor of the ELCD, mg Cl^- counts.

F_j= Weight fraction of phase j present in the waste.

m_{co}=Mass of carbon, as methane, in a calibration run, mg.

m_{ch}=Mass of chloride in a calibration run, mg.

m_s=Mass of the waste sample, g.

m_{sc}=Mass of carbon, as methane, in the sample, mg.

m_{sf}=Mass of sample container and waste sample, g.

m_{sh}=Mass of chloride in the sample, mg.

m_{st}=Mass of sample container prior to sampling, g.

m_{vo}=Mass of volatile organics in the sample, mg.

n=Total number of phases present in the waste.

P_p=Percent propane in calibration gas (L/L).

P_{vc}=Percent 1,1-dichloroethylene in calibration gas (L/L).

Q_c=Flow rate of calibration gas, L/min.

t_c=Length of time standard gas is delivered to the analyzer, min.

W=Weighted average VO concentration, ppmw.

6.2 Concentration of Carbon, as Methane, in the Calibration Gas.

$C_c=(19.681 \times P_p) + (13.121 \times P_{vc})$ Eq. 1

6.3 Concentration of Chloride in the Calibration Gas.

$C_h=28.998 \times P_{vc}$ Eq. 2

6.4 Mass of Carbon, as Methane, in a Calibration Run.

$m_{co}=C_c \times Q_c \times t_c$ Eq. 3

6.5 Mass of Chloride in a Calibration Run.

$m_{ch}=C_{ch} \times Q_c \times t_c$ Eq. 4

6.6 FID Response Factor, mg/counts.

$R_t=m_{co}/A_c$ Eq. 5

6.7 ELCD Response Factor, mg/counts.

$R_{th}=m_{ch}/A_c$ Eq. 6

6.8 Mass of Carbon in the Sample.

$m_{sc}=DR_t\,(A_s-A_b)$ Eq. 7

6.9 Mass of Chloride in the Sample.

$m_{sh}=DR_{th}\,(A_s-A_b)$ Eq. 8

6.10 Mass of Volatile Organics in the Sample.

$m_{vo}=m_{sc} + m_{sh}$ Eq. 9

6.11 Relative Standard Deviation.

$$RSD = \frac{100}{\overline{X}}\sqrt{\frac{\sum_{i=1}^{n}\left(X_i-\overline{X}\right)^2}{n-1}} \qquad \text{Eq. 10}$$

6.12 Mass of Sample.

$m_s = m_{sf} - m_{st}$ Eq. 11

6.13 Concentration of Volatile Organics in Waste.

$C = (m_{vo} \times 1000)/m_s$ Eq. 12

6.14 Weighted Average VO Concentration of Multi-phase Waste.

$$W = \sum_{j=1}^{n} F_j \times \overline{C}_j \qquad \text{Eq. 13}$$

METHOD 25E—DETERMINATION OF VAPOR PHASE ORGANIC CONCENTRATION IN WASTE SAMPLES

Introduction

Performance of this method should not be attempted by persons unfamiliar with the operation of a flame ionization detector (FID) nor by those who are unfamiliar with source sampling because knowledge beyond the scope of this presentation is required.

1. Applicability and Principle

1.1 Applicability. This method is applicable for determining the vapor pressure of waste samples which represent waste which is or will be managed in tanks.

1.2 Principle. The headspace vapor of the sample is analyzed for carbon content by a headspace analyzer, which uses an FID.

2. Interferences

2.1 The analyst shall select the operating parameters best suited to the requirements for a particular analysis. The analyst shall produce confirming data through an adequate supplemental analytical technique and have the data available for review by the Administrator.

3. Apparatus

3.1 Sampling. The following equipment is required:

3.1.1 Sample Containers. Vials, glass, with butyl rubber septa, Perkin-Elmer Corporation Numbers 0105–0129 (glass vials), B001–0728 (gray butyl rubber septum, plug style), 0105–0131 (butyl rubber septa), or equivalent. The seal must be made from butyl rubber. Silicone rubber seals are not acceptable.

3.1.2 Vial Sealer. Perkin-Elmer Number 105–0106, or equivalent.

3.1.3 Gas-Tight Syringe. Perkin-Elmer Number 00230117, or equivalent.

3.1.4 The following equipment is required for sampling.

3.1.4.1 Tap.

3.1.4.2 Tubing. Telfon, 0.25-in. ID. Note: Mention of trade names or specific products does not constitute endorsement by the Environmental Protection Agency.

3.1.4.3 Cooling Coil. Stainless steel (304), 0.25 in.–ID, equipped with a thermocouple at the coil outlet.

3.2 Analysis. The following equipment is required:

3.2.1 Balanced Pressure Headspace Sampler. Perkin-Elmer HS–6, HS–100, or equivalent, equipped with a glass bead column instead of a chromatographic column.

3.2.2 FID. An FID meeting the following specifications is required:

3.2.2.1 Linearity. A linear response (±5 percent) over the operating range as demonstrated by the procedures established in Section 6.1.2.

3.2.2.2 Range. A full scale range of 1 to 10,000 ppm CH_4. Signal attenuators shall be available to produce a minimum signal response of 10 percent of full scale.

3.2.3 Data Recording System. Analog strip chart recorder or digital integration system compatible with the FID for permanently recording the output of the detector.

3.2.4 Thermometer. Capable of reading temperatures in the range of 30° to 60 °C with an accuracy of ±0.1 °C.

4. Reagents

4.1 Analysis. The following items are required for analysis:

4.1.1 Hydrogen (H_2). Zero grade.

4.1.2 Carrier Gas. Zero grade nitrogen, containing less than 1 ppm carbon (C) and less than 1 ppm carbon dioxide.

4.1.3 Combustion Gas. Zero grade air or oxygen as required by the FID.

4.2 Calibration and Linearity Check.

4.2.1 Stock Cylinder Gas Standard. 100 percent propane. The manufacturer shall:

(a) Certify the gas composition to be accurate to ±3 percent or better (see Section 4.2.1.1);

(b) Recommend a maximum shelf life over which the gas concentration does not change by greater than ±5 percent from the certified value; and

(c) Affix the date of gas cylinder preparation, certified propane concentration, and recommended maximum shelf life to the cylinder before shipment to the buyer.

4.2.1.1 Cylinder Standards Certification. The manufacturer shall certify the concentration of the calibration gas in the cylinder by (a) directly analyzing the cylinder and (b) calibrating his analytical procedure on the day of cylinder analysis. To calibrate his analytical procedure, the manufacturer shall use, as a minimum, a three-point calibration curve.

4.2.1.2 Verification of Manufacturer's Calibration Standards. Before using, the manufacturer shall verify each calibration standard by (a) comparing it to gas mixtures prepared in accordance with the procedure described in Section 7.1 of Method 106 of part 61, appendix B, or by (b) calibrating it against Standard Reference Materials (SRM's) prepared by the National Bureau of Standards, if such SRM's are available. The agreement between the initially determined concentration value and the verification concentration value shall be within ±5 percent. The manufacturer must reverify all calibration standards on a time interval consistent with the shelf life of the cylinder standards sold.

5. Procedure

5.1 Sampling.

5.1.1 Install a sampling tap to obtain the sample at a point which is most representative of the unexposed waste (where the waste has had minimum opportunity to volatilize to the atmosphere). Assemble the sampling apparatus as shown in Figure 25E–1.

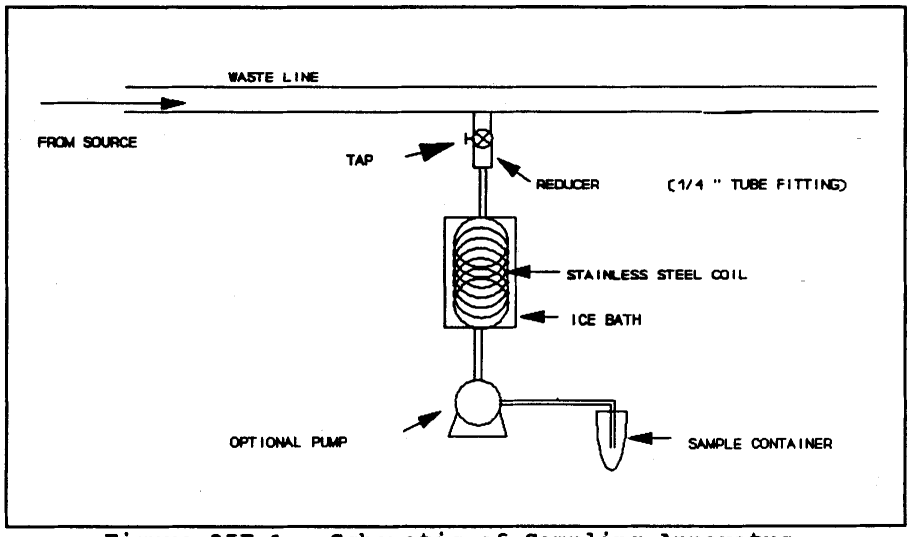

Figure 25E-1. Schematic of Sampling Apparatus.

5.1.2 Begin sampling by purging the sample lines and cooling coil with at least four volumes of waste. Collect the purged material in a separate container and dispose of it properly.

5.1.3 After purging, stop the sample flow and transfer the Teflon sampling tube to a sample container. Sample at a flow rate such that the temperature of the waste is <10 °C (<50 °F). Fill the sample container halfway (±5 percent) and cap it within 5 seconds. Store immediately in a cooler and cover with ice.

5.1.4 Alternative sampling techniques may be used upon the approval of the Administrator.

5.2 Analysis.

5.2.1 Allow one hour for the headspace vials to equilibrate at the temperature specified in the regulation. Allow the FID to warm up until a stable baseline is achieved on the detector.

5.2.2 Check the calibration of the FID daily using the procedures in Section 6.1.2.

5.2.3 Follow the manufacturer's recommended procedures for the normal operation of the headspace sampler and FID.

5.2.4 Use the procedures in Sections 7.4 and 7.5 to calculate the vapor phase organic vapor pressure in the samples.

5.2.5 Monitor the output of the detector to make certain that the results are being properly recorded.

6. Operational Checks and Calibration

Maintain a record of performance of each item.

6.1 Use the procedures in Section 6.1.1 to calibrate the headspace analyzer and FID and check for linearity before the system is first placed in operation, after any shutdown longer than 6 months, and after any modification of the system.

6.1.1 Calibration and Linearity. Use the procedures in Section 6.2.1 of Method 18 of Part 60, Appendix A, to prepare the standards and calibrate the flowmeters, using propane as the standard gas. Fill the calibration standard vials halfway (±5 percent) with deionized water. Purge and fill the airspace with calibration standard. Prepare a minimum of three calibration standards in triplicate at concentrations that will bracket the applicable cutoff. For a cutoff of 5.2 kPa, prepare nominal concentrations of 30,000, 50,000, and 70,000 ppm as propane. For a cutoff of 27.6 kPa, prepare nominal concentrations of 200,000, 300,000, and 400,000 ppm as propane.

6.1.1.1 Use the procedures in Section 5.2.3 to measure the FID response of each standard. Use a linear regression analysis to calculate the values for the slope (k) and the y-intercept (b). Use the procedures in Sections 7.2 and 7.3 to test the calibration and the linearity.

6.1.2 Daily FID Calibration Check. Check the calibration at the beginning and at the end of the daily runs by using the following procedures. Prepare two calibration standards at the nominal cutoff concentration using the procedures in Section 6.1.1. Place one at the beginning and one at the end of the daily run. Measure the FID response of the daily calibration standard and use the values for k and b from the most recent calibration to calculate the concentration of the daily standard. Use an equation similar to 25E–2 to calculate the percent difference between the daily standard and C_s. If the difference is within 5 percent, then the previous values for k and b may be used. Otherwise, use the procedures in Section 6.1.1 to recalibrate the FID.

7. Calculations

7.1 Nomenclature.

A = Measurement of the area under the response curve, counts.

b = y-intercept of the linear regression line.

C_a = Measured vapor phase organic concentration of sample, ppm as propane.

C_{ma} = Average measured vapor phase organic concentration of standard, ppm as propane.

C_m = Measured vapor phase organic concentration of standard, ppm as propane.

C_s = Calculated standard concentration, ppm as propane.

k = Slope of the linear regression line.

P_{bar} = Atmospheric pressure at analysis conditions, mm Hg (in. Hg).

P* = Organic vapor pressure in the sample, kPa (psi).

β = 1.333 X 10^{-7} kPa/[(mm Hg)(ppm)], (4.91 X 10^{-7} psi/[(in. Hg)(ppm)])

7.2 Linearity. Use the following equation to calculate the measured standard concentration for each standard vial.

$C_m = k\ A + b$ Eq. 25E–1

7.2.1 Calculate the average measured standard concentration (C_{ma}) for each set of triplicate standards and use the following equation to calculate the percent difference (PD) between C_{ma} and C_s.

$$PD = \frac{C_s - C_{ma}}{C_s} \times 100 \qquad \text{Eq. 25E-2}$$

The instrument linearity is acceptable if the percent difference is within five for each standard.

7.3 Relative Standard Deviation (RSD). Use the following equation to calculate the RSD for each triplicate set of standards.

$$RSD = \frac{100}{C_{ma}} \sqrt{\frac{\sum (C_m - C_{ma})^2}{2}} \qquad \text{Eq. 25E-3}$$

The calibration is acceptable if the RSD is within five for each standard concentration.

7.4 Concentration of organics in the headspace. Use the following equation to calculate the concentration of vapor phase organics in each sample.

$C_a = k\ A + b$ Eq. 25E–4

7.5 Vapor Pressure of Organics in the Headspace Sample. Use the following equation to calculate the vapor pressure of organics in the sample.

$P^* = \beta\ P_{bar}\ C_a$ Eq. 25E–5

METHOD 26—DETERMINATION OF HYDROGEN CHLORIDE EMISSIONS FROM STATIONARY SOURCES

1. Applicability, Principle, Interferences, Precision, Bias, and Stability

1.1 Applicability. This method is applicable for determining emissions of hydrogen halides (HX) [hydrogen chloride (HCl), hydrogen bromide (HBr), and hydrogen fluoride (HF)] and halogens (X_2) [chlorine (Cl_2) and bromine (Br_2)] from stationary sources. Sources, such as those controlled by wet scrubbers, that emit acid particulate matter must be sampled using Method 26A.

NOTE: Mention of trade names or specific products does not constitute endorsement by the Environmental Protection Agency.]

1.2 Principle. An integrated sample is extracted from the source and passed through

a prepurged heated probe and filter into dilute sulfuric acid and dilute sodium hydroxide solutions which collect the gaseous hydrogen halides and halogens, respectively. The filter collects other particulate matter including halide salts. The hydrogen halides are solubilized in the acidic solution and form chloride (Cl^-), bromide (Br^-), and fluoride (F^-) ions. The halogens have a very low solubility in the acidic solution and pass through to the alkaline solution where they are hydrolyzed to form a proton ($H^=$), the halide ion, and the hypohalous acid (HClO or HBrO). Sodium thiosulfate is added in excess to the alkaline solution to assure reaction with the hypohalous acid to form a second halide ion such that 2 halide ions are formed for each molecule of halogen gas. The halide ions in the separate solutions are measured by ion chromatography (IC).

1.3 Interferences. Volatile materials, such as chlorine dioxide (ClO_2) and ammonium chloride (NH_4Cl), which produce halide ions upon dissolution during sampling are potential interferents. Interferents for the halide measurements are the halogen gases which disproportionate to a hydrogen halide and a hydrohalous acid upon dissolution in water. However, the use of acidic rather than neutral or basic solutions for collection of the hydrogen halides greatly reduces the dissolution of any halogens passing through this solution. The simultaneous presence of HBr and CL_2 may cause a positive bias in the HCL result with a corresponding negative bias in the Cl_2 result as well as affecting the HBr/Br_2 split. High concentrations of nitrogen oxides (NO_X) may produce sufficient nitrate (NO_3-) to interfere with measurements of very low Br^- levels.

1.4 Precision and Bias. The within-laboratory relative standard deviations are 6.2 and 3.2 percent at HCl concentrations of 3.9 and 15.3 ppm, respectively. The method does not exhibit a bias to Cl_2 when sampling at concentrations less than 50 ppm.

1.5 Sample Stability. The collected Cl^- samples can be stored for up to 4 weeks.

1.6 Detection Limit. The analytical detection limit for Cl^- is 0.1 μg/ml. Detection limits for the other analyses should be similar.

2. Apparatus

2.1 Sampling. The sampling train is shown in Figure 26–1, and component parts are discussed below.

2.1.1 Probe. Borsilicate glass, approximately 3/8-in. (9-mm) I.D. with a heating system to prevent moisture condensation. A Teflon-glass filter in a mat configuration shall be installed behind the probe to remove particulate matter from the gas stream (see section 2.1.5). A glass wool plug should *not* be used to remove particulate matter since a negative bias in the data could result.

2.1.2 Three-Way Stopcock. A borosilicate glass three-way stopcock with a heating system to prevent moisturecondensation. The heated stopcock should connect to the outlet of the heated filter and the inlet of the first impinger. The heating system shall be capable of preventing condensation up to the inlet of the first impinger. Silicone grease may be used, if necessary, to prevent leakage.

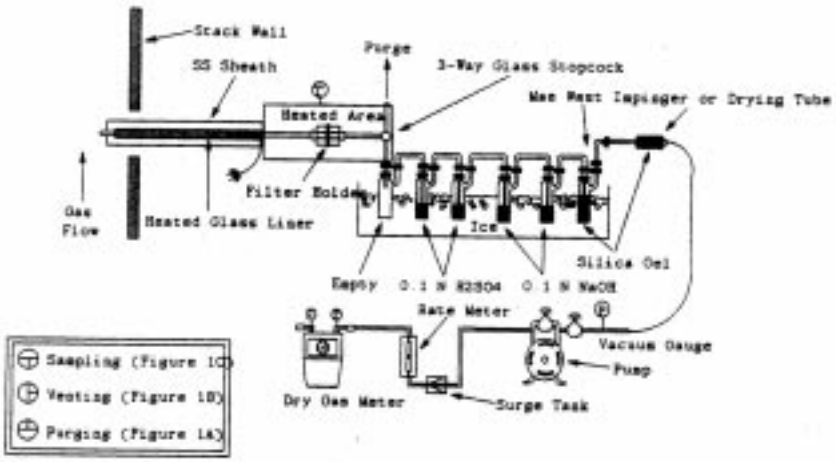

Figure 26-1. Sampling train.

2.1.3 Impingers. Four 30-ml midget impingers with leak-free glass connectors. Silicone grease may be used, if necessary, to prevent leakage. For sampling at high moisture sources or for sampling times greater than 1 hour, a midget impinger with a shortened stem (such that the gas sample does not bubble through the collected condensate) should be used in front of the first impinger.

2.1.4 Drying Tube or Impinger. Tube or impinger, of Mae West design, filled with 6- to 16-mesh indicating type silica gel, or equivalent, to dry the gas sample and to protect the dry gas meter and pump. If the silica gel has been used previously, dry at 175 °C (350 °F) for 2 hours. New silica gel may be used as received. Alternatively, other types of desiccants (equivalent or better) may be used.

2.1.5 Filter. When the stack gas temperature exceeds 210 °C (410 °F) and the HCl concentration is greater than 20 ppm, a quartz-fiber filter may be used.

2.1.6 Filter Holder and Support. The filter holder should be made of Teflon or quartz. The filter support shall be made of Teflon. All-Teflon filter holders and supports are available from Savillex Corp., 5325 Hwy 101, Minnetonka, MN 55345.

2.1.7 Sample Line. Leak-free, with compatible fittings to connect the last impinger to the needle valve.

2.1.8 Rate Meter. Rotameter, or equivalent, capable of measuring flow rate to within 2 percent of the selected flow rate of 2 liters/min.

2.1.9 Purge Pump, Purge Line, Drying Tube, Needle Valve, and Rate Meter. Pump capable of purging the sampling probe at 2 liters/min, with drying tube, filled with silica gel or equivalent, to protect pump, and a rate meter capable of measuring 0 to 5 liters/min.

2.1.10 Stopcock Grease, Valve, Pump, Volume Meter, Barometer, and Vacuum Gauge. Same as in Method 6, Sections 2.1.4, 2.1.7, 2.1.8, 2.1.10, 2.1.11, and 2.1.12.

2.1.11 Temperature Measuring Devices. Temperature measuring device to monitor the temperature of the probe and a thermometer or other temperature measuring device to monitor the temperature of the sampling system from the outlet of the probe to the inlet of the first impinger.

2.1.12 Ice Water Bath. To minimize loss of absorbing solution.

2.2 Sample Recovery.

2.2.1 Wash Bottles. Polyethylene or glass, 500-ml or larger, two.

2.2.2 Storage Bottles. 100- or 250-ml, high-density polyethylene bottles with Teflon® screw cap liners to store impinger samples.

2.3 Sample Preparation and Analysis. The materials required for volumetric dilution and chromatographic analysis of samples are described below.

2.3.1 Volumetric Flasks. Class A, 100-ml size.

2.3.2 Volumetric Pipets. Class A, assortment. To dilute samples into the calibration range of the instrument.

2.3.3 Ion Chromatograph. Suppressed or nonsuppressed, with a conductivity detector and electronic integrator operating in the peak area mode. Other detectors, strip chart recorders, and peak height measurements may be used.

3. Reagents

Unless otherwise indicated, all reagents must conform to the specifications established by the Committee on Analytical Reagents of the American Chemical Society (ACS reagent grade). When such specifications are not available, the best available grade shall be used.

3.1 Sampling.

3.1.1 Water. Deionized, distilled water that conforms to ASTM Specification D 1193–77, Type 3.

3.1.2 Acidic Absorbing solution, 0.1 N Sulfuric Acid (H_2SO_4). To prepare 100 ml of the absorbing solution for the front impinger pair, slowly add 0.28 ml of concentrated H_2SO_4 to about 90 ml of water while stirring, and adjust the final volume to 100 ml using additional water. Shake well to mix the solution.

3.1.3 Alkaline Absorbing Solution, 0.1 N Sodium Hydroxide (NaOH). To prepare 100 ml of the scrubber solution for the back pair of impingers, dissolve 0.40 g of solid NaOH in about 90 ml of water, and adjust the final solution volume to 100 ml using additional water. Shake well to mix the solution.

3.1.4 Sodium Thiosulfate ($Na_2S_2O_3.5H_2O$)

3.2 Sample Preparation and Analysis.

3.2.1 Water. Same as in Section 3.1.1.

3.2.2 Absorbing Solution Blanks. A separate blank solution of each absorbing reagent should be prepared for analysis with the field samples. Dilute 30 ml of each absorbing solution to approximately the same final volume as the field samples using the blank sample of rinse water.

3.2.3 Halide Salt Stock Standard Solutions. Prepare concentrated stock solutions from reagent grade sodium chloride (NaCl), sodium bromide (NaBr), and sodium fluoride (NaF). Each must be dried at 110 °C for two or more hours and then cooled to room temperature in a desiccator immediately before weighing. Accurately weigh 1.6 to 1.7 g of the dried NaCl to within 0.1 mg, dissolve in water, and dilute to 1 liter. Calculate the exact Cl^- concentration using Equation 26–1.

$$\mu g\ Cl^-/ml = g\ of\ NaCl \times 10^3 \times 35.453/58.44 \quad \text{Eq. 26–1}$$

In a similar manner, accurately weigh and solubilize 1.2 to 1.3 g of dried NaBr and 2.2 to 2.3 g of NaF to make 1-liter solutions. Use Equations 26–2 and 26–3 to calculate the Br^- and F^- concentrations.

$$\mu g\ Br^-/ml = g\ of\ NaBr \times 10^3 \times 79.904/102.90 \quad \text{Eq. 26–2}$$

$$\mu g\ F^-/ml = g\ of\ NaF \times 10^3 \times 18.998/41.99 \quad \text{Eq. 26–3}$$

Alternately, solutions containing a nominal certified concentration of 1000 mg/l NaCl are commercially available as convenient stock solutions from which standards can be made by appropriate volumetric dilution. Refrigerate the stock standard solutions and store no longer than one month.

3.2.4 Chromatographic Eluent. Effective eluents for nonsuppressed IC using a resin- or silica-based weak ion exchange column are a 4 mM potassium hydrogen phthalate solution, adjusted to pH 4.0 using a saturated sodium borate solution, and a 4 mM 4-hydroxy benzoate solution, adjusted to pH 8.6 using 1 N NaOH. An effective eluent for suppressed ion chromatography is a solution containing 3 mM sodium bicarbonate and 2.4 mM sodium carbonate. Other dilute solutions buffered to a similar pH and containing no interfering ions may be used. When using suppressed ion chromatography, if the ''water dip'' resulting from sample injection interferes with the chloride peak, use a 2 mM NaOH/2.4 mM sodium bicarbonate eluent.

4. Procedure

4.1 Sampling.

4.1.1 Preparation of Collection Train. Prepare the sampling train as follows: Pour 15 ml of the acidic absorbing solution into each one of the first pair of impingers, and 15 ml of the alkaline absorbing solution into each one of the second pair of impingers. Connect the impingers in series with the knockout impinger first, if used, followed by the two impingers containing the acidic absorbing solution and the two impingers containing the alkaline absorbing solution. Place a fresh charge of silica gel, or equivalent, in the drying tube or impinger at the end of the impinger train.

4.1.2 Adjust the probe temperature and the temperature of the filter and the stopcock, i.e., the heated area in Figure 26–1 to a temperature sufficient to prevent water condensation. This temperature should be at least 20°C above the source temperature, but not greater than 120 °C. The temperature should be monitored throughout a sampling run to ensure that the desired temperature is maintained.

4.1.3 Leak-Check Procedure. A leak-check prior to the sampling run is optional; however, a leak-check after the sampling run is mandatory. The leak-check procedure is as follows: Temporarily attach a suitable (e.g., 0–40 cc/min) rotameter to the outlet of the dry gas meter and place a vacuum gauge at or near the probe inlet. Plug the probe inlet, pull a vacuum of at least 250 mm Hg (10 in. Hg), and note the flow rate as indicated by the rotameter. A leakage rate not in excess of 2 percent of the average sampling rate is acceptable. (*NOTE:* Carefully release the probe inlet plug before turning off the

pump.) It is suggested (not mandatory) that the pump be leak-checked separately, either prior to or after the sampling run. If done prior to the sampling run, the pump leak-check shall precede the leak-check of the sampling train described immediately above; if done after the sampling run, the pump leak-check shall follow the train leak-check. To leak-check the pump, proceed as follows: Disconnect the drying tube from the probe-impinger assembly. Place a vacuum gauge at the inlet to either the drying tube or pump, pull a vacuum of 250 mm (10 in.) Hg, plug or pinch off the outlet of the flowmeter, and then turn off the pump. The vacuum should remain stable for at least 30 sec. Other leak-check procedures may be used, subject to the approval of the Administrator, U.S. Environmental Protection Agency.

4.1.4 Purge Procedure. Immediately before sampling, connect the purge line to the stopcock, and turn the stopcock to permit the purge pump to purge the probe (see Figure 1A of Figure 26–1). Turn on the purge pump, and adjust the purge rate to 2 liters/min. Purge for at least 5 minutes before sampling.

4.1.5 Sample Collection. Turn on the sampling pump, pull a slight vacuum of approximately 25 mm Hg (1 in. Hg) on the impinger train, and turn the stopcock to permit stack gas to be pulled through the impinger train (see Figure 1C of Figure 26–1). Adjust the sampling rate to 2 liters/min, as indicated by the rate meter, and maintain this rate to within 10 percent during the entire sampling run. Take readings of the dry gas meter volume and temperature, rate meter, and vacuum gauge at least once every 5 minutes during the run. A sampling time of 1 hour is recommended. Shorter sampling times may introduce a significant negative bias in the HCl concentration. At the conclusion of the sampling run, remove the train from the stack, cool, and perform a leak-check as described in section 4.1.2.

4.2 Sample Recovery. Disconnect the impingers after sampling. Quantitatively transfer the contents of the acid impingers and the knockout impinger, if used, to a leak-free storage bottle. Add the water rinses of each of these impingers and connecting glassware to the storage bottle. Repeat this procedure for the alkaline impingers and connecting glassware using a separate storage bottle. Add 25 mg sodium thiosulfate per the product of ppm of halogen anticipated to be in the stack gas times the dscm stack gas sampled. [Note: This amount of sodium thiosulfate includes a safety factor of approximately 5 to assure complete reaction with the hypohalous acid to form a second Cl^- ion in the alkaline solution.] Save portions of the absorbing reagents (0.1 N H_2SO_4 and 0.1 N NaOH) equivalent to the amount used in the sampling train (these are the absorbing solution blanks described in Section 3.2.2); dilute to the approximate volume of the corresponding samples using rinse water directly from the wash bottle being used. Add the same amount of sodium thiosulfate solution to the 0.1 N NaOH absorbing solution blank. Also, save a portion of the rinse water used to rinse the sampling train. Place each in a separate, prelabeled storage bottle. The sample storage bottles should be sealed, shaken to mix, and labeled. Mark the fluid level.

4.3 Sample Preparation for Analysis. Note the liquid levels in the storage bottles and confirm on the analysis sheet whether or not leakage occurred during transport. If a noticeable leakage has occurred, either void the sample or use methods, subject to the approval of the Administrator, to correct the final results. Quantitatively transfer the sample solutions to 100-ml volumetric flasks, and dilute to 100 ml with water.

4.4 Sample Analysis.

4.4.1 The IC conditions will depend upon analytical column type and whether suppressed or nonsuppressed IC is used. An example chromatogram from a nonsuppressed system using a 150-mm Hamilton PRP–X100 anion column, a 2 ml/min flow rate of 4 mM 4-hydroxy benzoate solution adjusted to a pH of 8.6 using 1 N NaOH, a 50-µl sample loop, and a conductivity detector set on 1.0 µS full scale is shown in Figure 26–2.

4.4.2 Before sample analysis, establish a stable baseline. Next, inject a sample of water, and determine if any Cl^-, Br^-, or F^- appears in the chromatogram. If any of these ions are present, repeat the load/injection procedure until they are no longer present. Analysis of the acid and alkaline absorbing solution samples requires separate standard calibration curves; prepare each according to Section 5.2. Ensure adequate baseline separation of the analyses.

4.4.3 Between injections of the appropriate series of calibration standards, inject in duplicate the reagent blanks, quality control sample, and the field samples. Measure the areas or heights of the Cl^-, Br^-, and F^- peaks. Use the mean response of the duplicate injections to determine the concentrations of the field samples and reagent blanks using the linear calibration curve. The values from duplicate injections should agree within 5 percent of their mean for the analysis to be valid. Dilute any sample and the blank with equal volumes of water if the concentration exceeds that of the highest standard.

4.5 Audit Analysis. An audit sample must be analyzed, subject to availability.

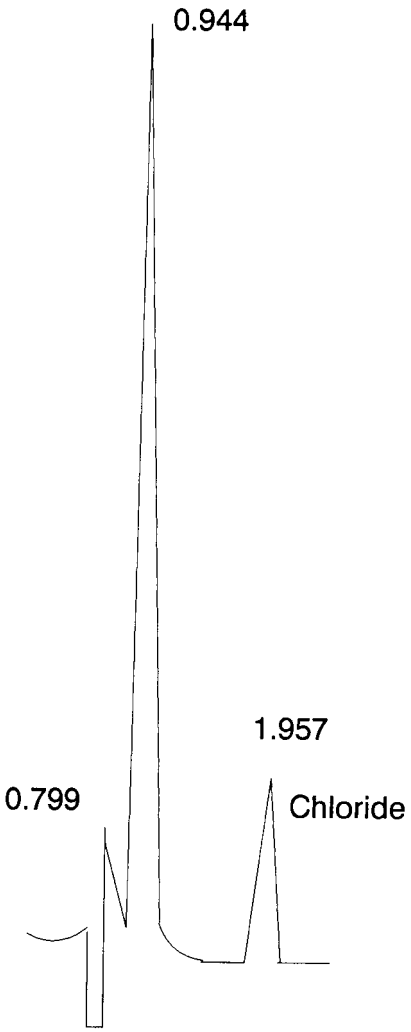

Figure 26-2. Example Chromatogram

5. Calibration

5.1 Dry Gas Metering System. Thermometers, Rate Meter, and Barometer. Same as in Method 6, sections 5.1, 5.2, 5.3, and 5.4.

5.2 Ion Chromatograph. To prepare the calibration standards, dilute given amounts (1.0 ml or greater) of the stock standard solutions to convenient volumes, using 0.1 N H_2SO_2 or 0.1 N NaOH, as appropriate. Prepare at least four calibration standards for each absorbing reagent containing the appropriate stock solutions such that they are within the linear range of the field samples. Using one of the standards in each series, ensure adequate baseline separation for the peaks of interest. Inject the appropriate series of calibration standards, starting with the lowest concentration standard first both before and after injection of the quality control check sample, reagent blanks, and field samples. This allows compensation for any instrument drift occurring during sample analysis.

Determine the peak areas, or heights, for the standards and plot individual values versus halide ion concentrations in µg/ml. Draw a smooth curve through the points. Use linear regression to calculate a formula describing the resulting linear curve.

6. Quality Assurance

6.1 Applicability. When the method is used to analyze samples to demonstrate compliance with a source emission regulation, a set of two audit samples must be analyzed.

6.2 Audit Procedure. The audit sample are chloride solutions. Concurrently analyze the two audit samples and a set of compliance samples in the same manner to evaluate the technique of the analyst and the standards preparation. The same analyst, analytical reagents, and analytical system shall be used both for compliance samples and the EPA audit samples. If this condition is met, auditing the subsequent compliance analyses for the same enforcement agency within 30 days is not required. An audit sample set may not be used to validate different sets of compliance samples under the jurisdiction of different enforcement agencies, unless prior arrangements are made with both enforcement agencies.

6.3 Audit Sample Availability. The audit samples may be obtained by writing or calling the EPA Regional Office or the appropriate enforcement agency. The request for the audit samples must be made at least 30 days prior to the scheduled compliance sample analyses.

6.4 Audit Results.

6.4.1 Calculate the concentrations in mg/dscm using the specified sample volume in the audit instructions.

NOTE: Indication of acceptable results may be obtained immediately by reporting the audit results in mg/dscm and compliance results in total µg HCl/sample to the responsible enforcement agency. Include the results of both audit samples, their identification numbers, and the analyst's name with the results of the compliance determination samples in appropriate reports to the EPA Regional Office or the appropriate enforcement agency. Include this information with subsequent analyses for the same enforcement agency during the 30-day period.

6.4.2 The concentrations of the audit samples obtained by the analyst shall agree within 10 percent of the actual concentrations. If the 10 percent specification is not met, reanalyze the compliance samples and audit samples, and include initial and reanalysis values in the test report.

6.4.3 Failure to meet the 10 percent specification may require retests until the audit problems are resolved. However, if the audit results do not affect the compliance or noncompliance status of the affected facility, the Administrator may waive the reanalysis requirement, further audits, or retests and accept the results of the compliance test. While steps are being taken to resolve audit analysis problems, the Administrator may also choose to use the data to determine the compliance or noncompliance status of the affected facility.

7. Calculations

Retain at least one extra decimal figure beyond those contained in the available data in intermediate calculations, and round off only the final answer appropriately.

7.1 Sample Volume, Dry Basis, Corrected to Standard Conditions. Calculate the sample volume using Eq. 6–1 of Method 6.

7.2 Total µg HCl, HBr, or HF Per Sample.

$m_{HX}=K\ V_s\ (S_X^- - B_X^-)$ Eq. 26–4

where:

B_X^-=Mass concentration of applicable absorbing solution blank, µg halide ion (Cl^-, Br^-, F^-)/ml, not to exceed 1 µg/ml which is 10 times the published analytical detection limit of 0.1 µg/ml.

m_{HX}=Mass of HCl, HBr, or HF in sample, µg.

S_X^-=Analysis of sample, µg halide ion (Cl^-, Br^-, F^-)/ml.

V_s=Volume of filtered and diluted sample, ml.

K_{HCl}=1.028 (µg HCl/µg−mole)/(µg Cl^-/µg−mole).

K_{HBr}=1.013 (µg HBr/µg−mole)/(µg Br^-/µg−mole).

K_{HF}=1.053 (µg HF/µg−mole)/(µg F^-/µg−mole).

7.3 Total µg Cl_2 or Br_2 Per Sample.

$m_{X2}=V_s\ (S_X^- - B_X^-)$ Eq. 26–5

where:

m_{X2}=Mass of Cl_2 or Br_2 in sample, µg.

7.4 Concentration of Hydrogen Halide or Halogen in Flue Gas.

$C=K\ m_{HX,X2}/V_{m(std)}$ Eq. 26–6

where:

C=Concentration of hydrogen halide (HX) or halogen (X_2), dry basis, mg/dscm.

$V_{m(std)}$= Dry gas volume measured by the dry gas meter, corrected to standard conditions, dscm.

$K=10^{-3}$ mg/µg.

8. Bibliography

1. Steinsberger, S.C. and J.H. Margeson, ''Laboratory and Field Evaluation of a Methodology for Determination of Hydrogen Chloride Emissions form Municipal and Hazardous Waste Incinerators,'' U.S. Environmental Protection Agency, Office of Research and Development, Report No. 600/3–89/064, April 1989. Available from the National Technical Information Service, Springfield, VA 22161 as PB89220586/AS.

2. State of California, Air Resources Board. Method 421. ''Determination of Hydrochloric Acid Emissions from Stationary Sources.'' March 18, 1987.

3. Cheney, J.L. and C.R. Fortune. Improvements in the Methodology for Measuring Hydrochloric Acid in Combustion Source Emissions. J. Environ. Sci. Health. *A19*(3): 337–350. 1984.

4. Stern, D. A., B. M. Myatt, J. F. Lachowski, and K. T. McGregor. Speciation of Halogen and Hydrogen Halide Compounds in Gaseous Emissions. In: Incineration and Treatment of Hazardous Waste: Proceedings of the 9th Annual Research Symposium, Cincinnati, Ohio, May 2–4, 1983. Publication No. 600/9–84–015. July 1984. Available from National Technical Information Service, Springfield, VA 22161 as PB84–234525.

5. Holm, R. D. and S. A. Barksdale. Analysis of Anions in Combustion Products. In: Ion Chromatographic Analysis of Environmental Pollutants. E. Sawicki, J. D. Mulik, and E. Wittgenstein (eds.). Ann Arbor, Michigan, Ann Arbor Science Publishers. 1978. pp. 99–110.

Method 26A—Determination of Hydrogen Halide and Halogen Emissions from Stationary Sources—Isokinetic Method

1. Applicability, Principle, Interferences, Precision, Bias, and Stability

1.1 Applicability. This method is applicable for determining emissions of hydrogen halides (HX) [hydrogen chloride (HCl), hydrogen bromide (HBr), and hydrogen fluoride (HF)] and halogens (X_2) [chlorine (Cl_2) and bromine (Br_2)] from stationary sources. This method collects the emission sample isokinetically and is therefore particularly suited for sampling at sources, such as those controlled by wet scrubbers, emitting acid particulate matter (e.g., hydrogen halides dissolved in water droplets). [Note: Mention of trade names or specific products does not constitute endorsement by the Environmental Protection Agency.]

1.2 Principle. Gaseous and particulate pollutants are withdrawn isokinetically from the source and collected in an optional cyclone, on a filter, and in absorbing solutions. The cyclone collects any liquid droplets and is not necessary if the source emissions do not contain them; however, it is preferable

to include the cyclone in the sampling train to protect the filter from any moisture present. The filter collects other particulate matter including halide salts. Acidic and alkaline absorbing solutions collect the gaseous hydrogen halides and halogens, respectively. Following sampling of emissions containing liquid droplets, any halides/halogens dissolved in the liquid in the cyclone and on the filter are vaporized to gas and collected in the impingers by pulling conditioned ambient air through the sampling train. The hydrogen halides are solubilized in the acidic solution and form chloride (Cl^-), bromide (Br^-), and fluoride (F^-) ions. The halogens have a very low solubility in the acidic solution and pass through to the alkaline solution where they are hydrolyzed to form a proton ($H^=$), the halide ion, and the hypohalous acid (HClO or HBrO). Sodium thiosulfate is added to the alkaline solution to assure reaction with the hypohalous acid to form a second halide ion such that 2 halide ions are formed for each molecule of halogen gas. The halide ions in the separate solutions are measured by ion chromatography (IC). If desired, the particulate matter recovered from the filter and the probe is analyzed following the procedures in Method 5. [NOTE: If the tester intends to use this sampling arrangement to sample concurrently for particulate matter, the alternative Teflon^R probe liner, cyclone, and filter holder should not be used. The Teflon^R filter support must be used. The tester must also meet the probe and filter temperature requirements of both sampling trains.]

1.3 Interferences. Volatile materials, such as chlorine dioxide (ClO_2) and ammonium chloride (NH_4Cl), which produce halide ions upon dissolution during sampling are potential interferents. Interferents for the halide measurements are the halogen gases which disproportionate to a hydrogen halide and an hypohalous acid upon dissolution in water. The use of acidic rather than neutral or basic solutions for collection of the hydrogen halides greatly reduces the dissolution of any halogens passing through this solution. The simultaneous presence of both HBr and $C1_2$ may cause a positive bias in the HCl result with a corresponding negative bias in the $C1_2$ result as well as affecting the HBr/Br_2 split. High concentrations of nitrogen oxides (NO_x) may produce sufficient nitrate (NO_3-) to interfere with measurements of very low Br- levels.

1.4 Precision and Bias. The method has a possible measurable negative bias below 20 ppm HCl perhaps due to reaction with small amounts of moisture in the probe and filter. Similar bias for the other hydrogen halides is possible.

1.5 Sample Stability. The collected Cl^- samples can be stored for up to 4 weeks for analysis for HCl and $C1_2$.

1.6 Detection Limit. The in-stack detection limit for HCl is approximately 0.02µg per liter of stack gas; the analytical detection limit for HCl is 0.1 1µg/ml. Detection limits for the other analyses should be similar.

2. Apparatus

2.1 Sampling. The sampling train is shown in Figure 26A–1; the apparatus is similar to the Method 5 train where noted as follows:

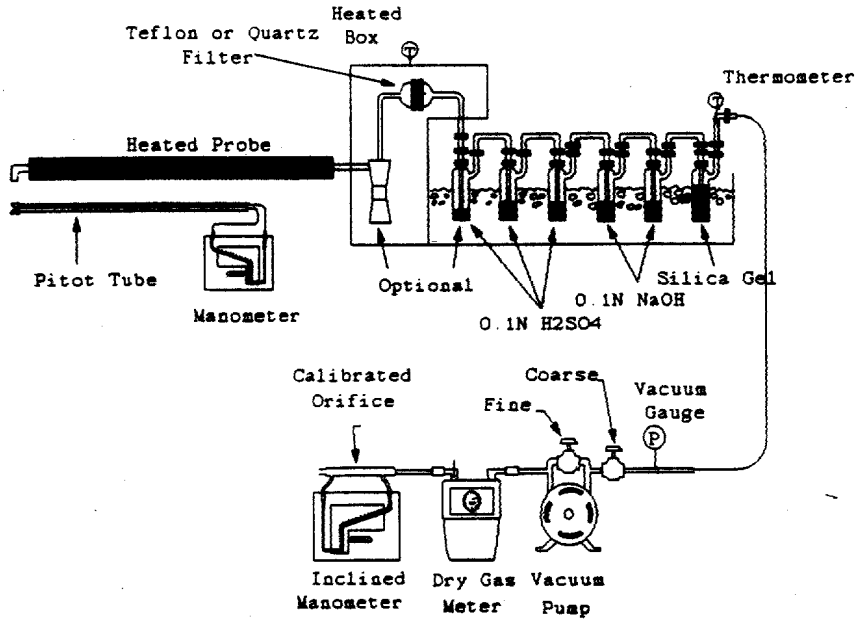

Figure 26A-1. Sampling Train

2.1.1 Probe Nozzle. Borosilicate or quartz glass; constructed and calibrated according to Method 5, Sections 2.1.1 and 5.1, and coupled to the probe liner using a Teflon ® union; a stainless steel nut is recommended for this union. When the stack temperature exceeds 210 °C (410 °F), a one-piece glass nozzle/liner assembly must be used.

2.1.2 Probe Liner. Same as Method 5, Section 2.1.2, except metal liners shall not be used. Water-cooling of the stainless steel sheath is recommended at temperatures exceeding 500 °C. Teflon ® may be used in limited applications where the minimum stack temperature exceeds 120 °C (250 °F) but never exceeds the temperature where Teflon® is estimated to become unstable (approximately 210 °C).

2.1.3 Pitot Tube, Differential Pressure Gauge, Filter Heating System, Metering System, Barometer, Gas Density Determination Equipment. Same as Method 5, Sections 2.1.3, 2.1.4, 2.1.6, 2.1.8, 2.1.9, and 2.1.10.

2.1.4 Cyclone (Optional). Glass or Teflon ®. Use of the cyclone is required only when the sample gas stream is saturated with moisture; however, the cyclone is recommended to protect the filter from any moisture droplets present.

2.1.5 Filter Holder. Borosilicate or quartz glass, or Teflon® filter holder, with a Teflon® filter support and a sealing gasket. The sealing gasket shall be constructed of Teflon® or equivalent materials. The holder design shall provide a positive seal against leakage at any point along the filter circumference. The holder shall be attached immediately to the outlet of the cyclone.

2.1.6 Impinger Train. The following system shall be used to determine the stack gas moisture content and to collect the hydrogen halides and halogens: five or six impingers connected in series with leak-free ground glass fittings or any similar leak-free noncontaminating fittings. The first impinger shown in Figure 26A–1 (knockout or condensate impinger) is optional and is recommended as a water knockout trap for use under high moisture conditions. If used, this impinger should be constructed as described below for the alkaline impingers, but with a shortened stem, and should contain 50 ml of 0.1 N H_2SO_4. The following two impingers (acid impingers which each contain 100 ml of 0.1 N H_2SO_4) shall be of the Greenburg-Smith design with the standard tip (Method 5, Section 2.1.7). The next two impingers (alkaline impingers which each contain 100 ml of 0.1 N

NaOH) and the last impinger (containing silica gel) shall be of the modified Greenburg-Smith design (Method 5, Section 2.1.7). The condensate, acid, and alkaline impingers shall contain known quantities of the appropriate absorbing reagents. The last impinger shall contain a known weight of silica gel or equivalent desiccant. Teflon® impingers are an acceptable alternative.

2.1.7 Ambient Air Conditioning Tube (Optional). Tube tightly packed with approximately 150 g of fresh 8 to 20 mesh sodium hydroxide-coated silica, or equivalent, (Ascarite II® has been found suitable) to dry and remove acid gases from the ambient air used to remove moisture from the filter and cyclone, when the cyclone is used. The inlet and outlet ends of the tube should be packed with at least 1-cm thickness of glass wool or filter material suitable to prevent escape of fines. Fit one end with flexible tubing, etc. to allow connection to probe nozzle following the test run.

2.2 Sample Recovery. The following items are needed:

2.2.1 Probe-Liner and Probe-Nozzle Brushes, Wash Bottles,

Glass Sample Storage Containers, Petri Dishes, Graduated Cylinder or Balance, and Rubber Policeman. Same as Method 5, Sections 2.2.1, 2.2.2, 2.2.3, 2.2.4, 2.2.5, and 2.2.7.

2.2.2 Plastic Storage Containers. Screw-cap polypropylene or polyethylene containers to store silica gel. High-density polyethylene bottles with Teflon screw cap liners to store impinger reagents, 1-liter.

2.2.3 Funnels. Glass or high-density polyethylene, to aid in sample recovery.

2.3 Analysis. For analysis, the following equipment is needed:

2.3.1 Volumetric Flasks. Class A, various sizes.

2.3.2 Volumetric Pipettes. Class A, assortment, to dilute samples to calibration range of the ion chromatograph (IC).

2.3.3 Ion Chromatograph. Suppressed or nonsuppressed, with a conductivity detector and electronic integrator operating in the peak area mode. Other detectors, a strip chart recorder, and peak heights may be used.

3. Reagents

Unless otherwise indicated, all reagents must conform to the specifications of the Committee on Analytical Reagents of the American Chemical Society (ACS reagent grade). When such specifications are not available, the best available grade shall be used.

3.1 Sampling.

3.1.1 Water. Deionized, distilled water that conforms to American Society of Testing and Materials (ASTM) Specification D 1193–77, Type 3 (incorporated by reference as specified in §60.17).

3.1.2 Acidic Absorbing Solution, 0.1 N Sulfuric Acid (H_2SO_4). To prepare 1 L, slowly add 2.80 ml of concentrated H_2SO_4 to about 900 ml of water while stirring, and adjust the final volume to 1 L using additional water. Shake well to mix the solution.

3.1.3 Alkaline Absorbing Solution, 0.1 N Sodium Hydroxide (NaOH). To prepare 1 L, dissolve 4.00 g of solid NaOH in about 900 ml of water and adjust the final volume to 1 L using additional water. Shake well to mix the solution.

3.1.4 Filter. Teflon® mat (e.g., Pallflex® TX40H145) filter. When the stack gas temperature exceeds 210 °C (410 °F) a quartz fiber filter may be used.

3.1.5 Silica Gel, Crushed Ice, and Stopcock Grease. Same as Method 5, Sections 3.1.2, 3.1.4, and 3.1.5, respectively.

3.1.6 Sodium Thiosulfate, ($Na_2S_2O_3 3.5H_2O$).

3.2 Sample Recovery

3.2.1 Water. Same as Section 3.1.1.

3.2.2 Acetone. Same as Method 5, Section 3.2.

3.3 Sample Analysis.

3.3.1 Water. Same as Section 3.1.1.

3.3.2 Reagent Blanks. A separate blank solution of each absorbing reagent should be prepared for analysis with the field samples. Dilute 200 ml of each absorbing solution (250 ml of the acidic absorbing solution, if a condensate impinger is used) to the same final volume as the field samples using the blank sample of rinse water. If a particulate determination is conducted, collect a blank sample of acetone.

3.3.3 Halide Salt Stock Standard Solutions. Prepare concentrated stock solutions from reagent grade sodium chloride (NaCl), sodium bromide (NaBr), and sodium fluoride (NaF). Each must be dried at 110 °C for 2 or more hours and then cooled to room temperature in a desiccator immediately before weighing. Accurately weigh 1.6 to 1.7 g of the dried NaCl to within 0.1 mg, dissolve in water, and dilute to 1 liter. Calculate the exact Cl^- concentration using Equation 26A–1.

$$\mu g\ Cl^-/ml = g\ of\ NaCl \times 10^3 \times 35.453/58.44 \quad \text{Eq. 26A–1}$$

In a similar manner, accurately weigh and solubilize 1.2 to 1.3 g of dried NaBr and 2.2 to 2.3 g of NaF to make 1-liter solutions. Use Equations 26A–2 and 26A–3 to calculate the Br^- and F^- concentrations.

$$\mu g\ Br^-/ml = g\ of\ NaBr \times 10^3 \times 79.904/102.90 \quad \text{Eq. 26A–2}$$

$$\mu g\ F^-/ml = g\ of\ NaF \times 10^3 \times 18.998/41.99 \quad \text{Eq. 26A–3}$$

Alternately, solutions containing a nominal certified concentration of 1000 mg/L NaCl are commercially available as convenient stock solutions from which standards can be made by appropriate volumetric dilution.

Refrigerate the stock standard solutions and store no longer than 1 month.

3.3.4 Chromatographic Eluent. Same as Method 26, Section 3.2.4.

4. Procedure

Because of the complexity of this method, testers and analysts should be trained and experienced with the procedures to ensure reliable results.

4.1 Sampling.

4.1.1 Pretest Preparation. Follow the general procedure given in Method 5, Section 4.1.1, except the filter need only be desiccated and weighed if a particulate determination will be conducted.

4.1.2 Preliminary Determinations. Same as Method 5, Section 4.1.2.

4.1.3 Preparation of Sampling Train. Follow the general procedure given in Method 5, Section 4.1.3, except for the following variations:

Add 50 ml of 0.1 N H_2SO_4 to the condensate impinger, if used. Place 100 ml of 0.1 N H_2SO_4 in each of the next two impingers. Place 100 ml of 0.1 N NaOH in each of the following two impingers. Finally, transfer approximately 200–300 g of preweighed silica gel from its container to the last impinger. Set up the train as in Figure 26A–1. When used, the optional cyclone is inserted between the probe liner and filter holder and located in the heated filter box.

4.1.4 Leak-Check Procedures. Follow the leak-check procedures given in Method 5, Sections 4.4.1 (Pretest Leak-Check), 4.1.4.2 (Leak-Checks During the Sample Run), and 4.1.4.3 (Post-Test Leak-Check).

4.1.5 Train Operation. Follow the general procedure given in Method 5, Section 4.1.5. Maintain a temperature around the filter and (cyclone, if used) of greater than 120 °C (248 °F).

For each run, record the data required on a data sheet such as the one shown in Method 5, Figure 5–2. If the condensate impinger becomes too full, it may be emptied, recharged with 50 ml of 0.1 N H_2SO_4, and replaced during the sample run. The condensate emptied must be saved and included in the measurement of the volume of moisture collected and included in the sample for analysis. The additional 50 ml of absorbing reagent must also be considered in calculating the moisture. After the impinger is reinstalled in the train, conduct a leak-check as described in Method 5, Section 4.1.4.2.

4.1.6 Post-Test Moisture Removal (Optional). When the optional cyclone is included in the sampling train or when moisture is visible on the filter at the end of a sample run even in the absence of a cyclone, perform the following procedure. Upon completion of the test run, connect the ambient air conditioning tube at the probe inlet and operate the train with the filter heating system at least 120 °C (248 °F) at a low flow rate (e.g., Δ H=1 in. H_2O) to vaporize any liquid and hydrogen halides in the cyclone or on the filter and pull them through the train into the impingers. After 30 minutes, turn off the flow, remove the conditioning tube, and examine the cyclone and filter for any visible moisture. If moisture is visible, repeat this step for 15 minutes and observe again. Keep repeating until the cyclone is dry. [Note: It is critical that this is repeated until the cyclone is completely dry.]

4.2 Sample Recovery. Allow the probe to cool. When the probe can be handled safely, wipe off all the external surfaces of the tip of the probe nozzle and place a cap loosely over the tip. Do not cap the probe tip tightly while the sampling train is cooling down because this will create a vacuum in the filter holder, drawing water from the impingers into the holder. Before moving the sampling train to the cleanup site, remove the probe, wipe off any silicone grease, and cap the open outlet of the impinger train, being careful not to lose any condensate that might be present. Wipe off any silicone grease and cap the filter or cyclone inlet. Remove the umbilical cord from the last impinger and cap the impinger. If a flexible line is used between the first impinger and the filter holder, disconnect it at the filter holder and let any condensed water drain into the first impinger. Wipe off any silicone grease and cap the filter holder outlet and the impinger inlet. Ground glass stoppers, plastic caps, serum caps, Teflon® tape, Parafilm®, or aluminum foil may be used to close these openings. Transfer the probe and filter/impinger assembly to the cleanup area. This area should be clean and protected from the weather to minimize sample contamination or loss. Inspect the train prior to and during disassembly and note any abnormal conditions. Treat samples as follows:

4.2.1 Container No. 1 (Optional; Filter Catch for Particulate Determination). Same as Method 5, Section 4.2, Container No. 1.

4.2.2 Container No. 2 (Optional; Front-Half Rinse for Particulate Determination). Same as Method 5, Section 4.2, Container No. 2.

4.2.3 Container No. 3 (Knockout and Acid Impinger Catch for Moisture and Hydrogen Halide Determination). Disconnect the impingers. Measure the liquid in the acid and knockout impingers to ±1 ml by using a graduated cylinder or by weighing it to ±0.5 g by using a balance. Record the volume or weight of liquid present. This information is required to calculate the moisture content of the effluent gas. Quantitatively transfer this liquid to a leak-free sample storage container. Rinse these impingers and connecting glassware including the back portion of the filter holder (and flexible tubing, if used) with water and add these rinses to the storage container. Seal the container, shake to mix, and label. The fluid level should be

marked so that if any sample is lost during transport, a correction proportional to the lost volume can be applied. Retain rinse water and acidic absorbing solution blanks and analyze with the samples.

4.2.4 Container No. 4 (Alkaline Impinger Catch for Halogen and Moisture Determination). Measure and record the liquid in the alkaline impingers as described in Section 4.2.3. Quantitatively transfer this liquid to a leak-free sample storage container. Rinse these two impingers and connecting glassware with water and add these rinses to the container. Add 25 mg of sodium thiosulfate per ppm halogen-dscm of stack gas sampled. [Note: This amount of sodium thiosulfate includes a safety factor of approximately 5 to assure complete reaction with the hypohalous acid to form a second Cl^- ion in the alkaline solution.] Seal the container, shake to mix, and label; mark the fluid level. Retain alkaline absorbing solution blank and analyze with the samples.

4.2.5 Container No. 5 (Silica Gel for Moisture Determination). Same as Method 5, Section 4.2, Container No. 3.

4.2.6 Container Nos. 6 through 9 (Reagent Blanks). Save portions of the absorbing reagents (0.1 N H_2SO_4 and 0.1 N NaOH) equivalent to the amount used in the sampling train; dilute to the approximate volume of the corresponding samples using rinse water directly from the wash bottle being used. Add the same ratio of sodium thiosulfate solution used in container No. 4 to the 0.1 N NaOH absorbing reagent blank. Also, save a portion of the rinse water alone and a portion of the acetone equivalent to the amount used to rinse the front half of the sampling train. Place each in a separate, prelabeled sample container.

4.2.7 Prior to shipment, recheck all sample containers to ensure that the caps are well-secured. Seal the lids of all containers around the circumference with Teflon® tape. Ship all liquid samples upright and all particulate filters with the particulate catch facing upward.

4.3 Sample Preparation and Analysis. Note the liquid levels in the sample containers and confirm on the analysis sheet whether or not leakage occurred during transport. If a noticeable leakage has occurred, either void the sample or use methods, subject to the approval of the Administrator, to correct the final results.

4.3.1 Container Nos. 1 and 2 and Acetone Blank (Optional; Particulate Determination). Same as Method 5, Section 4.3.

4.3.2 Container No. 5. Same as Method 5, Section 4.3 for silica gel.

4.3.3 Container Nos. 3 and 4 and Absorbing Solution and Water Blanks. Quantitatively transfer each sample to a volumetric flask or graduated cylinder and dilute with water to a final volume within 50 ml of the largest sample.

4.3.3.1 The IC conditions will depend upon analytical column type and whether suppressed or nonsuppressed IC is used. Prior to calibration and sample analysis, establish a stable baseline. Next, inject a sample of water, and determine if any Cl^-, Br^-, or F^- appears in the chromatogram. If any of these ions are present, repeat the load/injection procedure until they are no longer present. Analysis of the acid and alkaline absorbing solution samples requires separate standard calibration curves; prepare each according to Section 5.2. Ensure adequate baseline separation of the analyses.

4.3.3.2 Between injections of the appropriate series of calibration standards, inject in duplicate the reagent blanks and the field samples. Measure the areas or heights of the Cl^-, Br^-, and F^- peaks. Use the average response to determine the concentrations of the field samples and reagent blanks using the linear calibration curve. If the values from duplicate injections are not within 5 percent of their mean, the duplicate injection shall be repeated and all four values used to determine the average response. Dilute any sample and the blank with equal volumes of water if the concentration exceeds that of the highest standard.

4.4 Audit Sample Analysis. Audit samples must be analyzed subject to availability.

5. Calibration

Maintain a laboratory log of all calibrations.

5.1 Probe Nozzle, Pitot Tube, Dry Gas Metering System, Probe Heater, Temperature Gauges, Leak-Check of Metering System, and Barometer. Same as Method 5, Sections 5.1, 5.2, 5.3, 5.4, 5.5, 5.6, and 5.7, respectively.

5.2 Ion Chromatograph. To prepare the calibration standards, dilute given amounts (1.0 ml or greater) of the stock standard solutions to convenient volumes, using 0.1 N H_2SO_4 or 0.1 N NaOH, as appropriate. Prepare at least four calibration standards for each absorbing reagent containing the three stock solutions such that they are within the linear range of the field samples. Using one of the standards in each series, ensure adequate baseline separation for the peaks of interest. Inject the appropriate series of calibration standards, starting with the lowest concentration standard first both before and after injection of the quality control check sample, reagent blanks, and field samples. This allows compensation for any instrument drift occurring during sample analysis. Determine the peak areas, or height, of the standards and plot individual values versus halide ion concentrations in µg/ml. Draw a smooth curve through the points. Use linear regression to calculate a formula describing the resulting linear curve.

6. Quality Control

Same as Method 5, Section 4.4.

7. Quality Assurance

7.1 Applicability. When the method is used to demonstrate compliance with a regulation, a set of two audit samples shall be analyzed.

7.2 Audit Procedure. The currently available audit samples are chloride solutions. Concurrently analyze the two audit samples and a set of compliance samples in the same manner to evaluate the technique of the analyst and the standards preparation. The same analyst, analytical reagents, and analytical system shall be used both for compliance samples and the Environmental Protection Agency (EPA) audit samples.

7.3 Audit Sample Availability. Audit samples will be supplied only to enforcement agencies for compliance tests. Audit samples may be obtained by writing the Source Test Audit Coordinator (MD–77B), Quality Assurance Division, Atmospheric Research and Exposure Assessment Laboratory, U.S. Environmental Protection Laboratory, Research Triangle Park, NC 27711 or by calling the Source Test Audit Coordinator (STAC) at (919) 541–7834. The request for the audit samples should be made at least 30 days prior to the scheduled compliance sample analysis.

7.4 Audit Results. Calculate the concentrations in mg/dscm using the specified sample volume in the audit instructions. Include the results of both audit samples, their identification numbers, and the analyst's name with the results of the compliance determination samples in appropriate reports to the EPA regional office or the appropriate enforcement agency. (NOTE: Acceptability of results may be obtained immediately by reporting the audit results in mg/dscm and compliance results in total µg HCl/sample to the responsible enforcement agency.) The concentrations of the audit samples obtained by the analyst shall agree within 10 percent of the actual concentrations. If the 10 percent specification is not met, reanalyze the compliance samples and audit samples, and include initial and reanalysis values in the test report. Failure to meet the 10 percent specification may require retests until the audit problems are resolved.

8. Calculations

Retain at least one extra decimal figure beyond those contained in the available data in intermediate calculations, and round off only the final answer appropriately.

8.1 Nomenclature. Same as Method 5, Section 6.1. In addition:

1 B_{X-}=Mass concentration of applicable absorbing solution blank, µg halide ion (Cl^-, Br^-, F^-)/ml, not to exceed 1 µg/ml which is 10 times the published analytical detection limit of 0.1 µg/ml. (It is also approximately 5 percent of the mass concentration anticipated to result from a one hour sample at 10 ppmv HCl.)

C=Concentration of hydrogen halide (HX) or halogen (X_2), dry basis, mg/dscm.

m_{HX}=Mass of HCl, HBr, or HF in sample, µg.

m_{X2}=Mass of Cl_2 or Br_2 in sample, µg.

S_{X-}-=Analysis of sample, µg halide ion (Cl^-, Br^-, F^-)/ml.

V_S=Volume of filtered and diluted sample, ml.

8.2 Average Dry Gas Meter Temperature and Average Orifice Pressure Drop. See data sheet (Figure 5–2 of Method 5).

8.3 Dry Gas Volume. Calculate $V_{m(std)}$ and adjust for leakage, if necessary, using the equation in Section 6.3 of Method 5.

8.4 Volume of Water Vapor and Moisture Content. Calculate the volume of water vapor $V_{w(std)}$ and moisture content B_{ws} from the data obtained in this method (Figure 5–2 of Method 5); use Equations 5–2 and 5–3 of Method 5.

8.5 Isokinetic Variation and Acceptable Results. Use Method 5, Sections 6.11 and 6.12.

8.6 Acetone Blank Concentration, Acetone Wash Blank Residue Weight, Particulate Weight, and Particulate Concentration. For particulate determination.

8.7 Total µg HCl, HBr, or HF Per Sample.

$$m_{HX}=K\ V_s\ (S_{X-}-B_{X-}) \qquad \text{Eq. 26A–4}$$

where:

K_{HC1} = 1.028 (µg HCl/µg-mole)/(µg Cl^-/µg-mole).

K_{HBr}=1.013 (µg HBr/µg-mole)/(µg Br^-/µg-mole).

K_{HF}=1.053 (µg HF/µg-mole)/(µg F^-/µg-mole).

8.8 Total µg Cl_2 or Br_2 Per Sample.

$$m_{X2}= V_s\ (S_{X-}-B_{X-}) \qquad \text{Eq. 26A–5}$$

8.9 Concentration of Hydrogen Halide or Halogen in Flue Gas.

$$C=K\ m_{HX,X2}/V_{m(std)} \qquad \text{Eq. 26A–6}$$

where: $K=10^{10-}$ mg/µg

8.10 Stack Gas Velocity and Volumetric Flow Rate. Calculate the average stack gas velocity and volumetric flow rate, if needed, using data obtained in this method and the equations in Sections 5.2 and 5.3 of Method 2.

9. Bibliography

1. Steinsberger, S. C. and J. H. Margeson. Laboratory and Field Evaluation of a Methodology for Determination of Hydrogen Chloride Emissions from Municipal and Hazardous Waste Incinerators. U.S. Environmental Protection Agency, Office of Research and Development. Publication No. 600/3–89/064. April 1989. Available from National Technical Information Service, Springfield, VA 22161 as PB89220586/AS.

2. State of California Air Resources Board. Method 421—Determination of Hydrochloric Acid Emissions from Stationary Sources. March 18, 1987.

3. Cheney, J.L. and C.R. Fortune. Improvements in the Methodology for Measuring Hydrochloric Acid in Combustion Source Emissions. J. Environ. Sci. Health. *A19*(3): 337–350. 1984.

4. Stern, D.A., B.M. Myatt, J.F. Lachowski, and K.T. McGregor. Speciation of Halogen and Hydrogen Halide Compounds in Gaseous Emissions. In: Incineration and Treatment of Hazardous Waste: Proceedings of the 9th Annual Research Symposium, Cincinnati, Ohio, May 2–4, 1983. Publication No. 600/9–84–015. July 1984. Available from National Technical Information Service, Springfield, VA 22161 as PB84–234525.

5. Holm, R.D. and S.A. Barksdale. Analysis of Anions in Combustion Products. In: Ion Chromatographic Analysis of Environmental Pollutants, E. Sawicki, J.D. Mulik, and E. Wittgenstein (eds.). Ann Arbor, Michigan, Ann Arbor Science Publishers. 1978. pp. 99–110.

METHOD 27—DETERMINATION OF VAPOR TIGHTNESS OF GASOLINE DELIVERY TANK USING PRESSURE-VACUUM TEST

1. *Applicability and Principle*

1.1 Applicability. This method is applicable for the determination of vapor tightness of a gasoline delivery tank which is equipped with vapor collection equipment.

1.2 Principle. Pressure and vacuum are applied alternately to the compartments of a gasoline delivery tank and the change in pressure or vacuum is recorded after a specified period of time.

2. *Definitions and Nomenclature*

2.1 Gasoline. Any petroleum distillate or petroleum distillate/alcohol blend having a Reid vapor pressure of 27.6 kilopascals or greater which is used as a fuel for internal combustion engines.

2.2 Delivery Tank. Any container, including associated pipes and fittings, that is attached to or forms a part of any truck, trailer, or railcar used for the transport of gasoline.

2.3 Compartment. A liquid-tight division of a delivery tank.

2.4 Delivery Tank Vapor Collection Equipment. Any piping, hoses, and devices on the delivery tank used to collect and route gasoline vapors either from the tank to a bulk terminal vapor control system or from a bulk plant or service station into the tank.

2.5 Time Period of the Pressure or Vacuum Test (t). The time period of the test, as specified in the appropriate regulation, during which the change in pressure or vacuum is monitored, in minutes.

2.6 Initial Pressure (P_i). The pressure applied to the delivery tank at the beginning of the static pressure test, as specified in the appropriate regulation, in mm H_2O.

2.7 Initial Vacuum (V_i). The vacuum applied to the delivery tank at the beginning of the static vacuum test, as specified in the appropriate regulation, in mm H_2O.

2.8 Allowable Pressure Change (Δp). The allowable amount of decrease in pressure during the static pressure test, within the time period t, as specified in the appropriate regulation, in mm H_2O.

2.9 Allowable Vacuum Change (Δv). The allowable amount of decrease in vacuum during the static vacuum test, within the time period t, as specified in the appropriate regulation, in mm H_2O.

3. *Apparatus*

3.1 Pressure Source. Pump or compressed gas cylinder of air or inert gas sufficient to pressurize the delivery tank to 500 mm H_2O above atmospheric pressure.

3.2 Regulator. Low pressure regulator for controlling pressurization of the delivery tank.

3.3 Vacuum Source. Vacuum pump capable of evacuating the delivery tank to 250 mm H_2O below atmospheric pressure.

3.4 Pressure-Vacuum Supply Hose.

3.5 Manometer. Liquid manometer, or equivalent instrument, capable of measuring up to 500 mm H_2O gauge pressure with ±2.5 mm H_2O precision.

3.6 Pressure-Vacuum Relief Valves. The test apparatus shall be equipped with an in-line pressure-vacuum relief valve set to activate at 675 mm H_2O above atmospheric pressure or 250 mm H_2O below atmospheric pressure, with a capacity equal to the pressurizing or evacuating pumps.

3.7 Test Cap for Vapor Recovery Hose. This cap shall have a tap for manometer connection and a fitting with shut-off valve for connection to the pressure-vacuum supply hose.

3.8 Caps for Liquid Delivery Hoses.

4. *Pretest Preparations*

4.1 Summary. Testing problems may occur due to the presence of volatile vapors and/or temperature fluctuations inside the delivery tank. Under these conditions, it is often difficult to obtain a stable initial pressure at the beginning of a test, and erroneous test results may occur. To help prevent this, it is recommended that, prior to testing, volatile vapors be removed from the tank and the temperature inside the tank be allowed to stabilize. Because it is not always possible to attain completely these pretest conditions a provision to ensure reproducible results is included. The difference in results for two consecutive runs must meet the criterion in Sections 5.2.5 and 5.3.5.

4.2 Emptying of Tank. The delivery tank shall be emptied of all liquid.

4.3 Purging of Vapor. As much as possible, the delivery tank shall be purged of all volatile vapors by any safe, acceptable method. One method is to carry a load of non-volatile

liquid fuel, such as diesel or heating oil, immediately prior to the test, thus flushing out all the volatile gasoline vapors. A second method is to remove the volatile vapors by blowing ambient air into each tank compartment for at least 20 minutes. This second method is usually not as effective and often causes stabilization problems, requiring a much longer time for stabilization during the testing.

4.4 Temperature Stabilization. As much as possible, the test shall be conducted under isothermal conditions. The temperature of the delivery tank should be allowed to equilibrate in the test environment. During the test, the tank should be protected from extreme environmental and temperature variability, such as direct sunlight.

5. *Test Procedure*

5.1 Preparations.

5.1.1 Open and close each dome cover.

5.1.2 Connect static electrical ground connections to tank. Attach the liquid delivery and vapor return hoses, remove the liquid delivery elbows, and plug the liquid delivery fittings.

NOTE: The purpose of testing the liquid delivery hoses is to detect tears or holes that would allow liquid leakage during a delivery. Liquid delivery hoses are not considered to be possible sources of vapor leakage, and thus, do not have to be attached for a vapor leakage test. Instead, a liquid delivery hose could be either visually inspected, or filled with water to detect any liquid leakage.)

5.1.3 Attach the test cap to the end of the vapor recovery hose.

5.1.4 Connect the pressure-vacuum supply hose and the pressure-vacuum relief valve to the shut-off valve. Attach a manometer to the pressure tap.

5.1.5 Connect compartments of the tank internally to each other if possible. If not possible, each compartment must be tested separately, as if it were an individual delivery tank.

5.2 Pressure Test.

5.2.1 Connect the pressure source to the pressure-vacuum supply hose.

5.2.2 Open the shut-off valve in the vapor recovery hose cap. Applying air pressure slowly, pressurize the tank to P_i, the initial pressure specified in the regulation.

5.2.3 Close the shut-off valve and allow the pressure in the tank to stabilize, adjusting the pressure if necessary to maintain pressure of P_i. When the pressure stabilizes, record the time and initial pressure.

5.2.4 At the end of t minutes, record the time and final pressure.

5.2.5 Repeat steps 5.2.2 through 5.2.4 until the change in pressure for two consecutive runs agrees within ±12.5 mm H_2O. Calculate the arithmetic average of the two results.

5.2.6 Compare the average measured change in pressure to the allowable pressure change, Δ p, as specified in the regulation. If the delivery tank does not satisfy the vapor tightness criterion specified in the regulation, repair the sources of leakage, and repeat the pressure test until the criterion is met.

5.2.7 Disconnect the pressure source from the pressure-vacuum supply hose, and slowly open the shut-off valve to bring the tank to atmospheric pressure.

5.3 Vacuum Test.

5.3.1 Connect the vacuum source to the pressure-vacuum supply hose.

5.3.2 Open the shut-off valve in the vapor recovery hose cap. Slowly evacuate the tank to V_i, the initial vacuum specified in the regulation.

5.3.3 Close the shut-off valve and allow the pressure in the tank to stabilize, adjusting the pressure if necessary to maintain a vacuum of V_i. When the pressure stabilizes, record the time and initial vacuum.

5.3.4 At the end of t minutes, record the time and final vacuum.

5.3.5 Repeat steps 5.3.2 through 5.3.4 until the change in vacuum for two consecutive runs agrees within ±12.5 mm H_2O. Calculate the arithmetic average of the two results.

5.3.6 Compare the average measured change in vacuum to the allowable vacuum change, Δ v, as specified in the regulation. If the delivery tank does not satisfy the vapor tightness criterion specified in the regulation, repair the sources of leakage, and repeat the vacuum test until the criterion is met.

5.3.7 Disconnect the vacuum source from the pressure-vacuum supply hose, and slowly open the shut-off valve to bring the tank to atmospheric pressure.

5.4 Post-Test Clean-Up. Disconnect all test equipment and return the delivery tank to its pretest condition.

6. *Alternative Procedures*

6.1 The pumping of water into the bottom of a delivery tank is an acceptable alternative to the pressure source described above. Likewise, the draining of water out of the bottom of a delivery tank may be substituted for the vacuum source. Note that some of the specific step-by-step procedures in the method must be altered slightly to accommodate these different pressure and vacuum sources.

6.2 Techniques other than specified above may be used for purging and pressurizing a delivery tank, if prior approval is obtained from the Administrator. Such approval will be based upon demonstrated equivalency with the above method.

METHOD 28—CERTIFICATION AND AUDITING OF WOOD HEATERS

1. Applicability and Principle

1.1 Applicability. This method is applicable for the certification and auditing of wood heaters. This method describes the test facility, test fuel charge, and wood heater operation as well as procedures for determining burn rates and particulate emission rates and for reducing data.

1.2 Principle. Particulate matter emissions are measured from a wood heater burning a prepared test fuel crib in a test facility maintained at a set of prescribed conditions.

2. Definitions

2.1 Burn Rate. The rate at which test fuel is consumed in a wood heater. Measured in kilograms of wood (dry basis) per hour (kg/hr).

2.2 Certification or Audit Test. A series of at least four test runs conducted for certification or audit purposes that meets the burn rate specifications in Section 5.

2.3 Firebox. The chamber in the wood heater in which the test fuel charge is placed and combusted.

2.4 Secondary Air Supply. An air supply that introduces air to the wood heater such that the burn rate is not altered by more than 25 percent when the secondary air supply is adjusted during the test run. The wood heater manufacturer can document this through design drawings that show the secondary air is introduced only into a mixing chamber or secondary chamber outside the firebox.

2.5 Test Facility. The area in which the wood heater is installed, operated, and sampled for emissions.

2.6 Test Fuel Charge. The collection of test fuel pieces placed in the wood heater at the start of the emission test run.

2.7 Test Fuel Crib. The arrangement of the test fuel charge with the proper spacing requirements between adjacent fuel pieces.

2.8 Test Fuel Loading Density. The weight of the as-fired test fuel charge per unit volume of usable firebox.

2.9 Test Fuel Piece. The 2 x 4 or 4 x 4 wood piece cut to the length required for the test fuel charge and used to construct the test fuel crib.

2.10 Test Run. An individual emission test which encompasses the time required to consume the mass of the test fuel charge.

2.11 Usable Firebox Volume. The volume of the firebox determined using the following definitions:

2.11.1 Height. The vertical distance extending above the loading door, if fuel could reasonably occupy that space, but not more than 2 inches above the top (peak height) of the loading door, to the floor of the firebox (i.e., below a permanent grate) if the grate allows a 1-inch diameter piece of wood to pass through the grate, or, if not, to the top of the grate. Firebox height is not necessarily uniform but must account for variations caused by internal baffles, air channels, or other permanent obstructions.

2.11.2 Length. The longest horizontal fire chamber dimension that is parallel to a wall of the chamber.

2.11.3 Width. The shortest horizontal fire chamber dimension that is parallel to a wall of the chamber.

2.12 Wood Heater. An enclosed, wood-burning appliance capable of and intended for space heating or domestic water heating, as defined in the applicable regulation.

2.13 Pellet Burning Wood Heater. A wood heater which meets the following criteria: (1) The manufacturer makes no reference to burning cord wood in advertising or other literature, (2) the unit is safety listed for pellet fuel only, (3) the unit operating and instruction manual must state that the use of cordwood is prohibited by law, and (4) the unit must be manufactured and sold including the hopper and auger combination as integral parts.

3. Apparatus

3.1 Insulated Solid Pack Chimney. For installation of wood heaters. Solid pack insulated chimneys shall have a minimum of 2.5 cm (1 in.) solid pack insulating material surrounding the entire flue and possess a label demonstrating conformance to U.L. Standard 103 (incorporated by reference. See §60.17).

3.2 Platform Scale and Monitor. For monitoring of fuel load weight change. The scale shall be capable of measuring weight to within 0.05 kg (0.1 lb) or 1 percent of the initial test fuel charge weight, whichever is greater.

3.3 Wood Heater Temperature Monitors. Seven, each capable of measuring temperature to within 1.5 percent of expected absolute temperatures.

3.4 Test Facility Temperature Monitor. A thermocouple located centrally in a vertically oriented 150 mm (6 in.) long, 50 mm (2 in.) diameter pipe shield that is open at both ends, capable of measuring temperature to within 1.5 percent of expected temperatures.

3.5 Balance (optional). Balance capable of weighing the test fuel charge to within 0.05 kg (0.1 1b).

3.6 Moisture Meter. Calibrated electrical resistance meter for measuring test fuel moisture to within 1 percent moisture content.

3.7 Anemometer. Device capable of detecting air velocities less than 0.10 m/sec (20 ft/min), for measuring air velocities near the test appliance.

3.8 Barometer. Mercury, aneroid or other barometer capable of measuring atmospheric pressure to within 2.5 mm Hg (0.1 in. Hg).

3.9 Draft Gauge. Electromanometer or other device for the determination of flue draft or static pressure readable to within 0.50 Pa (0.002 in. H_2O).

3.10 Humidity Gauge. Psychrometer or hygrometer for measuring room humidity.

3.11 Sampling Methods. Use particulate emission measurement Method 5G or Method 5H to determine particulate concentrations, gas flow rates, and particulate emission rates.

4. Test Facility. Test Fuel Properties, and Test Fuel Charge Specifications

4.1 Test Facility.

4.1.1 Wood Heater Flue. Steel flue pipe extending to 2.6±0.15 m (8.5±0.5 ft) above the top of the platform scale, and above this level, insulated solid pack type chimney extending to 4.6+0.3 m (15±1 ft) above the platform scale, and of the size specified by the wood heater manufacturer. This applies to both freestanding and insert type wood heaters.

Other chimney types (e.g., solid pack insulated pipe) may be used in place of the steel flue pipe if the wood heater manufacturer's written appliance specifications require such chimney for home installation (e.g., zero clearance wood heater inserts). Such alternative chimney or flue pipe must remain and be sealed with the wood heater following the certification test.

4.1.2 Test Facility Conditions. The test facility temperature shall be maintained between 18 and 32 °C (65 and 90 °F) during each test run.

Air velocities within 0.6 m (2 ft) of the test appliance and exhaust system shall be less than 0.25 m/sec (50 ft/min) without fire in the unit.

The flue shall discharge into the same space or into a space freely communicating with the test facility. Any hood or similar device used to vent combustion products shall not induce a draft greater than 1.25 Pa (0.005 in. H_2O) on the wood heater measured when the wood heater is not operating.

For test facilities with artificially induced barometric pressures (e.g., pressurized chambers), the barometric pressure in the test facility shall not exceed 1,033 mb (30.5 in. Hg) during any test run.

4.2 Test Fuel Properties. The test fuel shall conform to the following requirements:

4.2.1 Fuel Species. Untreated, air-dried, Douglas fir lumber. Kiln-dried lumber is not permitted. The lumber shall be certified C grade (standard) or better Douglas fir by a lumber grader at the mill of origin as specified in the West Coast Lumber Inspection Bureau standard No. 16 (incorporated by reference. See §60.17).

4.2.2 Fuel Moisture. The test fuel shall have a moisture content range between 16 to 20 percent on a wet basis (19 to 25 percent dry basis).

Addition of moisture to previously dried wood is not allowed. It is recommended that the test fuel be stored in a temperature and humidity-controlled room.

4.2.3 Fuel Temperature. The test fuel shall be at the test facility temperature 18 to 32 °C (65 to 90 °F).

4.3 Test Fuel Charge Specifications.

4.3.1 Fuel Dimensions. The dimensions of each test fuel piece shall conform to the nominal measurements of 2 x 4 and 4 x 4 lumber. Each piece of test fuel (not including spacers) shall be of equal length, except as necessary to meet requirements in Section 6.2.5, and shall closely approximate ⅝ the dimensions of the length of the usable firebox. The fuel piece dimensions shall be determined in relation to the appliance's firebox volume according to guidelines listed below:

4.3.1.1 If the usable firebox volume is less than or equal to 0.043 m^3 (1.5 ft^3), use 2 x 4 lumber.

4.3.1.2 If the usable firebox volume is greater than 0.043 m^3 (1.5 ft^3) and less than or equal to 0.085 m^3 (3.0 ft^3), use 2 x 4 and 4 x 4 lumber. About half the weight of the test fuel charge shall be 2 x 4 lumber, and the remainder shall be 4 x 4 lumber.

4.3.1.3 If the usable firebox volume is greater than 0.085 m^3 (3.0 ft^3), use 4 x 4 lumber.

4.3.2 Test Fuel Spacers. Air-dried, Douglas fir lumber meeting the fuel properties in Section 4.2. The spacers shall be 130 x 40 x 20 mm (5 x 1.5 x 0.75 in.).

4.3.3 Test Fuel Charge Density. The test fuel charge density shall be 112 ± 11.2 kg/m^3 (7 ± 0.7 lb/ft^3) of usable firebox volume on a wet basis.

4.4 Wood Heater Thermal Equilibrium. The average of the wood heater surface temperatures at the end of the test run shall agree with the average surface temperature at the start of the test run to within 70 °C (125 °F).

5. Burn Rate Criteria

5.1 Burn Rate Categories. One emission test run is required in each of the following burn rate categories:

BURN RATE CATEGORIES
(Average kg/hr, dry basis)

Category 1	Category 2	Category 3	Category 4
<0.80	0.80 to 1.25	1.25 to 1.90	Maximum burn rate.

5.1.1 Maximum Burn Rate. For Category 4, the wood heater shall be operated with the primary air supply inlet controls fully open

(or, if thermostatically controlled, the thermostat shall be set at maximum heat output) during the entire test run, or the maximum burn rate setting specified by the manufacturer's written instructions.

5.1.2 Other Burn Rate Categories. For burn rates in Categories 1 through 3, the wood heater shall be operated with the primary air supply inlet control, or other mechanical control device, set at a predetermined position necessary to obtain the average burn rate required for the category.

5.2 Alternative Burn Rates for Burn Rate Categories 1 and 2. If a wood heater cannot be operated at a burn rate below 0.80 kg/hr, two test runs shall be conducted with burn rates within Category 2. If a wood heater cannot be operated at a burn rate below 1.25 kg/hr, the flue shall be dampered or the air supply otherwise controlled in order to achieve two test runs within Category 2.

Evidence that a wood heater cannot be operated at a burn rate less than 0.80 kg/hr shall include documentation of two or more attempts to operate the wood heater in burn rate Category 1 and fuel combustion has stopped, or results of two or more test runs demonstrating that the burn rates were greater than 0.80 kg/hr when the air supply controls were adjusted to the lowest possible position or settings. Stopped fuel combustion is evidenced when an elapsed time of 30 minutes or more has occurred without a measurable (< 0.05 kg (0.1 lb) or 1.0 percent, whichever is greater) weight change in the test fuel charge. See also Section 6.4.3. Report the evidence and the reasoning used to determine that a test in burn rate Category 1 cannot be achieved; for example, two attempts to operate at a burn rate of 0.4 kg/hr are not sufficient evidence that burn rate Category 1 cannot be achieved.

NOTE: After July 1, 1990, if a wood heater cannot be operated at a burn rate less than 0.80 kg/hr, at least one test run with an average burn rate of 1.00 kg/hr or less shall be conducted. Additionally, if flue dampering must be used to achieve burn rates below 1.25 kg/hr (or 1.0 kg/hr), results from a test run conducted at burn rates below 0.90 kg/hr need not be reported or included in the test run average provided that such results are replaced with results from a test run meeting the criteria above.

6. Procedures

6.1 Catalytic Combustor and Wood Heater Aging. The catalyst-equipped wood heater or a wood heater of any type shall be aged before the certification test begins. The aging procedure shall be conducted and documented by a testing laboratory accredited according to procedures in §60.535 of 40 CFR Part 60.

6.1.1 Catalyst-equipped Wood Heater. Operate the catalyst-equipped wood heater using fuel described in Section 4.2 or cordwood with a moisture content between 15 and 25 percent on a wet basis. Operate the wood heater at a medium burn rate (Category 2 or 3) with a new catalytic combustor in place and in operation for at least 50 hours. Record and report hourly catalyst exit temperature data (Section 6.2.2) and the hours of operation.

6.1.2 Non-Catalyst Wood Heater. Operate the wood heater using the fuel described in Section 6.1.1 at a medium burn rate for at least 10 hours. Record and report the hours of operation.

6.2 Pretest Preparation. Record the test fuel charge dimensions and weights, and wood heater and catalyst descriptions as shown in the example in Figure 28–3.

6.2.1 Wood Heater Installation. Assemble the wood heater appliance and parts in conformance with the manufacturer's written installation instructions. Place the wood heater centrally on the platform scale and connect the wood heater to the flue described in Section 4.1.1. Clean the flue with an appropriately sized, wire chimney brush before each certification test.

6.2.2 Wood Heater Temperature Monitors. For catalyst-equipped wood heaters, locate a temperature monitor (optional) about 25 mm (1 in.) upstream of the catalyst at the centroid of the catalyst face area, and locate a temperature monitor (mandatory) that will indicate the catalyst exhaust temperature. This temperature monitor is centrally located within 25 mm (1 in.) downstream at the centroid of catalyst face area. Record these locations.

Locate wood heater surface temperature monitors at five locations on the wood heater firebox exterior surface. Position the temperature monitors centrally on the top surface, on two sidewall surfaces, and on the bottom and back surfaces. Position the monitor sensing tip on the firebox exterior surface inside of any heat shield, air circulation walls, or other wall or shield separated from the firebox exterior surface. Surface temperature locations for unusual design shapes (e.g., spherical, etc.) shall be positioned so that there are four surface temperature monitors in both the vertical and horizontal planes passing at right angles through the centroid of the firebox, not including the fuel loading door (total of five temperature monitors).

6.2.3 Test Facility Conditions. Locate the test facility temperature monitor on the horizontal plane that includes the primary air intake opening for the wood heater. Locate the temperature monitor 1 to 2 m (3 to 6 ft) from the front of the wood heater in the 90° sector in front of the wood heater.

Use an anemometer to measure the air velocity. Measure and record the room air velocity before the pretest ignition period (Section 6.3) and once immediately following the test run completion.

Measure and record the test facility's ambient relative humidity, barometric pressure, and temperature before and after each test run.

Measure and record the flue draft or static pressure in the flue at a location no greater than 0.3 m (1 ft) above the flue connector at the wood heater exhaust during the test run at the recording intervals (Section 6.4.2).

6.2.4 Wood Heater Firebox Volume. Determine the firebox volume using the definitions for height, width, and length in Section 2. Volume adjustments due to presence of firebrick and other permanent fixtures may be necessary. Adjust width and length dimensions to extend to the metal wall of the wood heater above the firebrick or permanent obstruction if the firebrick or obstruction extending the length of the side(s) or back wall extends less than one-third of the usable firebox height. Use the width or length dimensions inside the firebrick if the firebrick extends more than one-third of the usable firebox height. If a log retainer or grate is a permanent fixture and the manufacturer recommends that no fuel be placed outside the retainer, the area outside of the retainer is excluded from the firebox volume calculations.

In general, exclude the area above the ash lip if that area is less than 10 percent of the usable firebox volume. Otherwise, take into account consumer loading practices. For instance, if fuel is to be loaded front-to-back, an ash lip may be considered usable firebox volume.

Include areas adjacent to and above a baffle (up to two inches above the fuel loading opening) if four inches or more horizontal space exist between the edge of the baffle and a vertical obstruction (e.g., sidewalls or air channels).

6.2.5 Test Fuel Charge. Prepare the test fuel pieces in accordance with the specifications in Section 4.3. Determine the test fuel moisture content with a calibrated electrical resistance meter or other equivalent performance meter. (To convert moisture meter readings from the dry basis to the wet basis: (100)(percent dry reading) ÷ (100 + percent dry reading) = percent moisture wet basis.) Determine fuel moisture for each fuel piece (not including spacers) by averaging at least three moisture meter readings, one from each of three sides, measured parallel to the wood grain. Average all the readings for all the fuel pieces in the test fuel charge. If an electrical resistance type meter is used, penetration of insulated electrodes shall be one-fourth the thickness of the test fuel piece or 19 mm (0.75 in.), whichever is greater. Measure the moisture content within a 4-hour period prior to the test run. Determine the fuel temperature by measuring the temperature of the room where the wood has been stored for at least 24 hours prior to the moisture determination.

Attach the spacers to the test fuel pieces with uncoated, ungalvanized nails or staples as illustrated in Figure 28–1. Attachment of spacers to the top of the test fuel piece(s) on top of the test fuel charge is optional.

To avoid stacking difficulties, or when a whole number of test fuel pieces does not result, all piece lengths shall be adjusted uniformly to remain within the specified loading density. The shape of the test fuel crib shall be geometrically similar to the shape of the firebox volume without resorting to special angular or round cuts on the individual fuel pieces.

6.2.6 Sampling Method. Prepare the sampling equipment as defined by the selected method. Collect one particulate emission sample for each test run.

6.2.7 Secondary Air Adjustment Validation. If design drawings do not show the introductions of secondary air into a chamber outside the firebox (Section 2.4), conduct a separate test of the wood heater's secondary air supply. Operate the wood heater at a burn rate in Category 1 (Sections 5.1 or 5.2) with the secondary air supply operated following the manufacturer's written instructions. Start the secondary air validation test run as described in Section 6.4.1, except no emission sampling is necessary and burn rate data shall be recorded at 5-minute intervals.

After the start of the test run, operate the wood heater with the secondary air supply set as per the manufacturer's instructions, but with no adjustments to this setting. After 25 percent of the test fuel has been consumed, adjust the secondary air supply controls to another setting, as per the manufacturer's instructions. Record the burn rate data (5-minute intervals) for 20 minutes following the air supply adjustment.

Adjust the air supply control(s) to the original position(s), operate at this condition for at least 20 minutes, and repeat the air supply adjustment procedure above. Repeat the procedure three times at equal intervals over the entire burn period as defined in Section 6.4. If the secondary air adjustment results in a burn rate change of more than an average of 25 percent between the 20-minute periods before and after the secondary adjustments, the secondary air supply shall be considered a primary air supply, and no adjustment to this air supply is allowed during the test run.

6.3 Pretest Ignition. Build a fire in the wood heater in accordance with the manufacturer's written instructions.

6.3.1 Pretest Fuel Charge. Crumpled newspaper loaded with kindling may be used to help ignite the pretest fuel. The pretest fuel, used to sustain the fire, shall meet the same fuel requirements prescribed in Section 4.2. The pretest fuel charge shall consist of whole 2 x 4's that are no less than 1/3 the length of the test fuel pieces. Pieces of 4 x 4 lumber in approximately the same weight ratio as for

the test fuel charge may be added to the pretest fuel charge.

6.3.2 Wood Heater Operation and Adjustments. Set the air inlet supply controls at any position that will maintain combustion of the pretest fuel load. At least one hour before the start of the test run, set the air supply controls at the approximate positions necessary to achieve the burn rate desired for the test run. Adjustment of the air supply controls, fuel addition or subtractions, and coalbed raking shall be kept to a minimum but are allowed up to 15 minutes prior to the start of the test run. For the purposes of this method, coalbed raking is the use of a metal tool (poker) to stir coals, break burning fuel into smaller pieces, dislodge fuel pieces from positions of poor combustion, and check for the condition of uniform charcoalization. Record all adjustments made to the air supply controls, adjustments to and additions or subtractions of fuel, and any other changes to wood heater operations that occur during pretest ignition period. Record fuel weight data and wood heater temperature measurements at 10-minute intervals during the hour of the pretest ignition period preceding the start of the test run. During the 15-minute period prior to the start of the test run, the wood heater loading door shall not be open more than a total of 1 minute. Coalbed raking is the only adjustment allowed during this period.

NOTE: One purpose of the pretest ignition period is to achieve uniform charcoalization of the test fuel bed prior to loading the test fuel charge. Uniform charcoalization is a general condition of the test fuel bed evidenced by an absence of large pieces of burning wood in the coal bed and the remaining fuel pieces being brittle enough to be broken into smaller charcoal pieces with a metal poker. Manipulations to the fuel bed prior to the start of the test run should be done to achieve uniform charcoalization while maintaining the desired burn rate. In addition, some wood heaters (e.g., high mass units) may require extended pretest burn time and fuel additions to reach an initial average surface temperature sufficient to meet the thermal equilibrium criteria in Section 4.4.

The weight of pretest fuel remaining at the start of the test run is determined as the difference between the weight of the wood heater with the remaining pretest fuel and the tare weight of the cleaned, dry wood heater with or without dry ash or sand added consistent with the manufacturer's instructions and the owner's manual. The tare weight of the wood heater must be determined with the wood heater (and ash, if added) in a dry condition.

6.4 Test Run. Complete a test run in each burn rate category, as follows:

6.4.1 Test Run Start. When the kindling and pretest fuel have been consumed to leave a fuel weight between 20 and 25 percent of the weight of the test fuel charge, record the weight of the fuel remaining and start the test run. Record and report any other criteria, in addition to those specified in this section, used to determine the moment of the test run start (e.g., firebox or catalyst temperature), whether such criteria are specified by the wood heater manufacturer or the testing laboratory. Record all wood heater individual surface temperatures, catalyst temperatures, any initial sampling method measurement values, and begin the particulate emission sampling. Within 1 minute following the start of the test run, open the wood heater door, load the test fuel charge, and record the test fuel charge weight. Recording of average, rather than individual, surface temperatures is acceptable for tests conducted in accordance with §60.533(o)(3)(i) of 40 CFR Part 60.

Position the fuel charge so that the spacers are parallel to the floor of the firebox, with the spacer edges abutting each other. If loading difficulties result, some fuel pieces may be placed on edge. If the usable firebox volume is between 0.043 and 0.085 m^3 (1.5 and 3.0 ft^3), alternate the piece sizes in vertical stacking layers to the extent possible. For example, place 2 x 4's on the bottom layer in direct contact with the coal bed and 4 x 4's on the next layer, etc. (See Figure 28–2). Position the fuel pieces parallel to each other and parallel to the longest wall of the firebox to the extent possible within the specifications in Section 6.2.5.

Load the test fuel in appliances having unusual or unconventional firebox design maintaining air space intervals between the test fuel pieces and in conformance with the manufacturer's written instructions. For any appliance that will not accommodate the loading arrangement specified in the paragraph above, the test facility personnel shall contact the Administrator for an alternative loading arrangement.

The wood heater door may remain open and the air supply controls adjusted up to five minutes after the start of the test run in order to make adjustments to the test fuel charge and to ensure ignition of the test fuel charge has occurred. Within the five minutes after the start of the test run, close the wood heater door and adjust the air supply controls to the position determined to produce the desired burn rate. No other adjustments to the air supply controls or the test fuel charge are allowed (except as specified in Sections 6.4.3 and 6.4.4) after the first five minutes of the test run. Record the length of time the wood heater door remains open, the adjustments to the air supply controls, and any other operational adjustments.

6.4.2 Data Recording. Record fuel weight data, wood heater individual surface and catalyst temperature measurements, other wood heater operational data (e.g., draft), test facility temperature and sampling

method data at 10-minute intervals (or more frequently at the option of the tester) as shown on example data sheet, Figure 28–4.

6.4.3 Test Fuel Charge Adjustment. The test fuel charge may be adjusted (i.e., re-positioned) once during a test run if more than 60 percent of the initial test fuel charge weight has been consumed and more than 10 minutes have elapsed without a measurable (< 0.05 kg (0.1 lb) or 1.0 percent, whichever is greater) weight change. The time used to make this adjustment shall be less than 15 seconds.

6.4.4 Air Supply Adjustment. Secondary air supply controls may be adjusted once during the test run following the manufacturer's written instructions (see Section 6.2.7). No other air supply adjustments are allowed during the test run.

Recording of wood heater flue draft during the test run is optional for tests conducted in accordance with §60.533(o)(3)(i) of 40 CFR Part 60.

6.4.5 Auxiliary Wood Heater Equipment Operation. Heat exchange blowers sold with the wood heater shall be operated during the test run following the manufacturer's written instructions. If no manufacturer's written instructions are available, operate the heat exchange blower in the ''high'' position. (Automatically operated blowers shall be operated as designed.) Shaker grates, by-pass controls, or other auxiliary equipment may be adjusted only one time during the test run following the manufacturer's written instructions.

Record all adjustments on a wood heater operational written record.

NOTE: If the wood heater is sold with a heat exchange blower as an option, test the wood heater with the heat exchange blower operating as described in Sections 5 and 6 and report the results. As an alternative to repeating all test runs without the heat exchange blower operating, the tester may conduct one test run without the blower operating as described in Section 6.4.5 at a burn rate in Category 2 (Section 5.1). If the emission rate resulting from this test run without the blower operating is equal to or less than the emission rate plus 1.0 g/hr for the test run in burn rate Category 2 with the blower operating, the wood heater may be considered to have the same average emission rate with or without the blower operating. Additional test runs without the blower operating are unnecessary.

6.5 Consecutive Test Runs. Test runs on a wood heater may be conducted consecutively provided that a minimum one-hour interval occurs between test runs.

6.6 Additional Test Runs. The testing laboratory may conduct more than one test run in each of the burn rate categories specified in Section 5.1. If more than one test run is conducted at a specified burn rate, the results from at least two-thirds of the test runs in that burn rate category shall be used in calculating the weighted average emission rate (see Section 8.1). The measurement data and results of all test runs shall be reported regardless of which values are used in calculating the weighted average emission rate (see NOTE: in Section 5.2).

6.7 Pellet Burning Heaters. Certification testing procedures for pellet burning wood heaters are based on the procedures in this method. The differences in the procedures from the sections in Method 28 are as follows:

6.7.1 Test Fuel Properties. The test fuel shall be all wood pellets with a moisture content no greater than 20 percent on a wet basis (25 percent on a dry basis). Determine the wood moisture content with either ASTM–D2016–74(82)(Method A) or ASTM D4442–84. (incorporated by reference. See Section 60.17).

6.7.2 Test Fuel Charge Specifications. The test fuel charge size shall be as per the manufacturer s written instructions for maintaining the desired burn rate.

6.7.3 Wood Heater Firebox Volume. The firebox volume need not be measured or determined for establishing the test fuel charge size. The firebox dimensions and other heater specifications needed to identify the heater for certification purposes shall be reported.

6.7.4 Heater Installation. Arrange the heater with the fuel supply hopper on the platform scale as described in Section 6.2.1.

6.7.5 Pretest Ignition. Start a fire in the heater as directed by the manufacturer's written instructions, and adjust the heater controls to achieve the desired burn rate. Operate the heater at the desired burn rate for at least 1 hour before the start of the test run.

6.7.6 Sampling Method. Method 5G or 5H shall be used for the certification testing of pellet burners. Prepare the sampling equipment as described in Method 5G or 5H. Collect one particulate emission sample for each test run.

6.7.7 Test Run. Complete a test run in each burn rate category as follows:

6.7.7.1 Test Run Start. When the wood heater has operated for at least 1 hour at the desired burn rate, add fuel to the supply hopper as necessary to complete the test run, record the weight of the fuel in the supply hopper (the wood heater weight), and start the test run. Add no additional fuel to the hopper during the test run.

Record all the wood heater surface temperatures, the initial sampling method measurement values, the time at the start of the test, and begin the emission sampling. Make no adjustments to the wood heater air supply or wood supply rate during the test run.

6.7.7.2 Data Recording. Record the fuel (wood heater) weight data, wood heater temperature and operational data, and emission sampling data as described in Section 6.4.2.

6.7.7.3 Test Run Completion. Continue emission sampling and wood heater operation for 2 hours. At the end of the test run, stop the particulate sampling, and record the final fuel weight, the run time, and all final measurement values.

6.7.8 Calculations. Determine the burn rate using the difference between the initial and final fuel (wood heater) weights and the procedures described in Section 8.3. Complete the other calculations as described in Section 8.

7. Calibrations

7.1 Platform Scale. Perform a multipoint calibration (at least five points spanning the operational range) of the platform scale before its initial use. The scale manufacturer's calibration results are sufficient for this purpose. Before each certification test, audit the scale with the wood heater in place by weighing at least one calibration weight (Class F) that corresponds to 20 percent to 80 percent of the expected test fuel charge weight. If the scale cannot reproduce the value of the calibration weight within 0.05 kg (0.1 lbs) or 1 percent of the expected test fuel charge weight, whichever is greater, recalibrate the scale before use with at least five calibration weights spanning the operational range of the scale.

7.2 Balance (optional). Calibrate as described in Section 7.1.

7.3 Temperature Monitor. Calibrate as in Method 2, Section 4.3, before the first certification test and semiannually thereafter.

7.4 Moisture Meter. Calibrate as per the manufacturer's instructions before each certification test.

7.5 Anemometer. Calibrate the anemometer as specified by the manufacturer's instructions before the first certification test and semiannually thereafter.

7.6 Barometer. Calibrate against a mercury barometer before the first certification test and semiannually thereafter.

7.7 Draft Gauge. Calibrate as per the manufacturer's instructions; a liquid manometer does not require calibration.

7.8 Humidity Gauge. Calibrate as per the manufacturer's instructions before the first certification test and semiannually thereafter.

8. Calculations and Reportinq

Carry out calculations retaining at least one extra decimal figure beyond that of the acquired data. Round off figures after the final calculation.

8.1 Weighted Average Emission Rate.

$$E_w = \frac{\sum_{i=1}^{n} (K_i E_i)}{\sum_{i=1}^{n} K_i} \qquad \text{Eq. 28-1}$$

where:

E_w = Weighted average emission rate, g/hr;

E_i = Emission rate for test run, i, from Method 5G or 5H, g/hr;

k_i = Test run weighting factor = $P_{i=1}$—P_{i-1};

n = Total number of test runs;

P_i = Probability for burn rate during test run, i, obtained from Table 28–1. Use linear interpolation to determine probability values for burn rates between those listed on the table.

NOTE: P_o always equals 0, $P_{(n=1)}$ always equals 1, P_1 corresponds to the probability of the lowest recorded burn rate, P_2 corresponds to the probability of the next lowest burn rate, etc. An example calculation is shown on Figure 28–5.

8.2 Average Wood Heater Surface Temperatures. Calculate the average of the wood heater surface temperatures for the start of the test run (Section 6.3.1) and for the test run completion (Section 6.3.6). If the two average temperatures do not agree within 70 °C (125 °F), report the test run results, but do not include the test run results in the test average. Replace such test run results with results from another test run in the same burn rate category.

8.3 Burn Rate.

$$BR = \frac{60\ W_{wd}}{\theta} \frac{100 - \%M_w}{100} \qquad \text{Eq. 28-2}$$

Where:

BR = Dry wood burn rate, kg/hr (lb/hr)

W_{wd} = Total mass of wood burned during the test run, kg (lb)

θ - Total time of test run, min.

$\%M_w$ = Average moisture in test fuel charge, wet basis, percent.

8.4 Reporting Criteria. Submit both raw and reduced test data for wood heater tests. Specific reporting requirements are as follows:

8.4.1 Wood Heater Identification. Report wood heater identification information. An example data form is shown on Figure 28–4.

8.4.2 Test Facility Information. Report test facility temperature, air velocity, and humidity information. An example data form is shown on Figure 28–4.

8.4.3 Test Equipment Calibration and Audit Information. Report calibration and audit results for the platform scale, test fuel balance, test fuel moisture meter, and sampling equipment including volume metering systems and gaseous analyzers.

8.4.4 Pretest Procedure Description. Report all pretest procedures including pretest fuel weight, burn rates, wood heater temperatures, and air supply settings. An example data form is shown on Figure 28–4.

8.4.5 Particulate Emission Data. Report a summary of test results for all test runs and the weighted average emission rate. Submit copies of all data sheets and other records collected during the testing. Submit examples of all calculations.

8.4.6 Suggested Test Report Format.

a. Introduction

1. Purpose of test—certification, audit, efficiency, research and development.
2. Wood heater identification—manufacturer, model number, catalytic/ noncatalytic, options.
3. Laboratory—name, location (altitude), participants.
4. Test information—date wood heater received, date of tests, sampling methods used, number of test runs.

b. Summary and Discussion of Results

1. Table of results (in order of increasing burn rate)—test run number, burn rate, particulate emission rate, efficiency (if determined), averages (indicate which test runs are used).
2. Summary of other data—test facility conditions, surface temperature averages, catalyst temperature averages, pretest fuel weights, test fuel charge weights, run times.
3. Discussion—Burn rate categories achieved, test run result selection, specific test run problems and solutions.

c. Process Description

1. Wood heater dimensions—volume, height, width, lengths (or other linear dimensions), weight, volume adjustments.
2. Firebox configuration—air supply locations and operation, air supply introduction location, refractory location and dimensions, catalyst location, baffle and by-pass location and operation (include line drawings or photographs).
3. Process operation during test—air supply settings and adjustments, fuel bed adjustments, draft.
4. Test fuel—test fuel properties (moisture and temperature), test fuel crib description (include line drawing or photograph), test fuel charge density.

d. Sampling Locations

Describe sampling location relative to wood heater. Include drawing or photograph.

e. Sampling and Analytical Procedures

1. Sampling methods—brief reference to operational and sampling procedures and optional and alternative procedures used.
2. Analytical methods—brief description of sample recovery and analysis procedures.

f. Quality Control and Assurance Procedures and Results

1. Calibration procedures and results—certification procedures, sampling and analysis procedures.
2. Test method quality control procedures—leak-checks, volume meter checks, stratification (velocity) checks, proportionality results.

APPENDICES

1. Results and Example Calculations. Complete summary tables and accompanying examples of all calculations.
2. Raw Data. Copies of all uncorrected data sheets for sampling measurements, temperature records and sample recovery data. Copies of all pretest burn rate and wood heater temperature data.
3. Sampling and Analytical Procedures. Detailed description of procedures followed by laboratory personnel in conducting the certification test, emphasizing particularly parts of the procedures differing from the methods (e.g., approved alternatives).
4. Calibration Results. Summary of all calibrations, checks, and audits pertinent to certification test results with dates.
5. Participants. Test personnel, manufacturer representatives, and regulatory observers.
6. Sampling And Operation Records. Copies of uncorrected records of activities not included on raw data sheets (e.g., wood heater door open times and durations).
7. Additional Information. Wood heater manufacturer's written instructions for operation during the certification test.

9. Bibliography

1. Oregon Department of Environmental Quality Standard Method for Measuring the Emissions and Efficiencies of Woodstoves, June 8, 1984. Pursuant to Oregon Administrative Rules Chapter 340, Division 21.
2. American Society for Testing Materials. Proposed Test Methods for Heating Performance and Emissions of Residential Wood-Fired Closed Combustion-Chamber Heating Appliances. E–6 Proposal P 180. August, 1986.
3. Radian Corporation, OMNI Environmental Services, Inc., Cumulative Probability for a Given Burn Rate Based on Data Generated in the CONEG and BPA Studies. Package of materials submitted to the Fifth Session of the Regulatory Negotiation Committee, July 16–17, 1986.

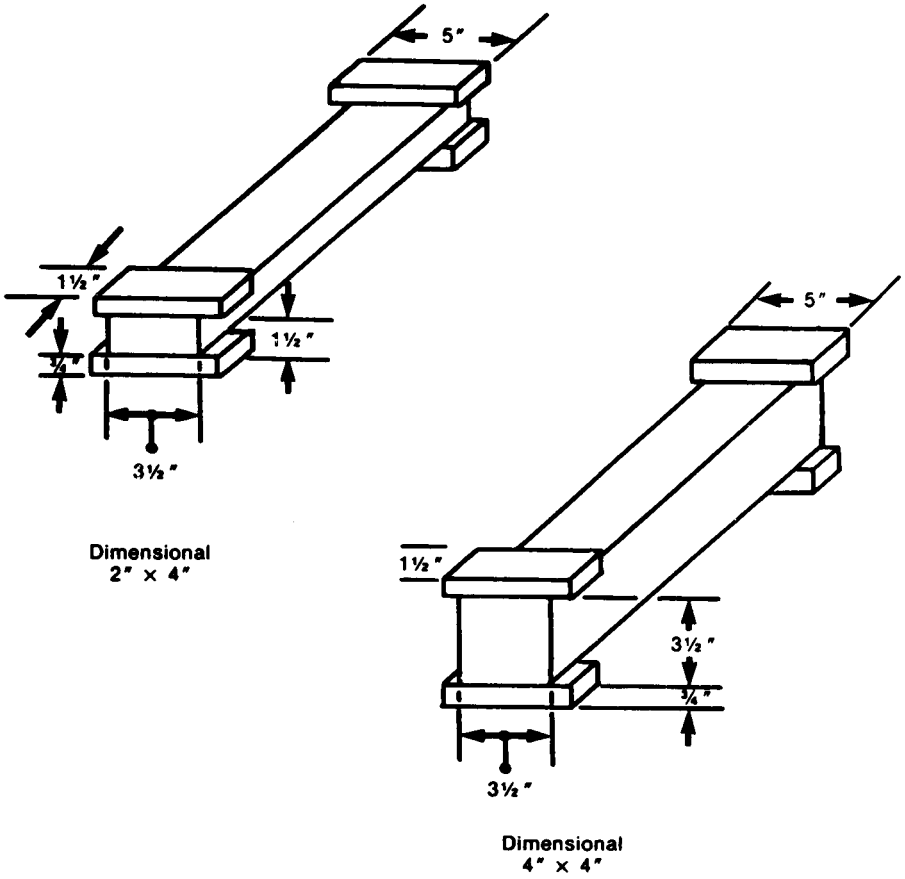

Figure 28-1. Test fuel spacer dimensions.

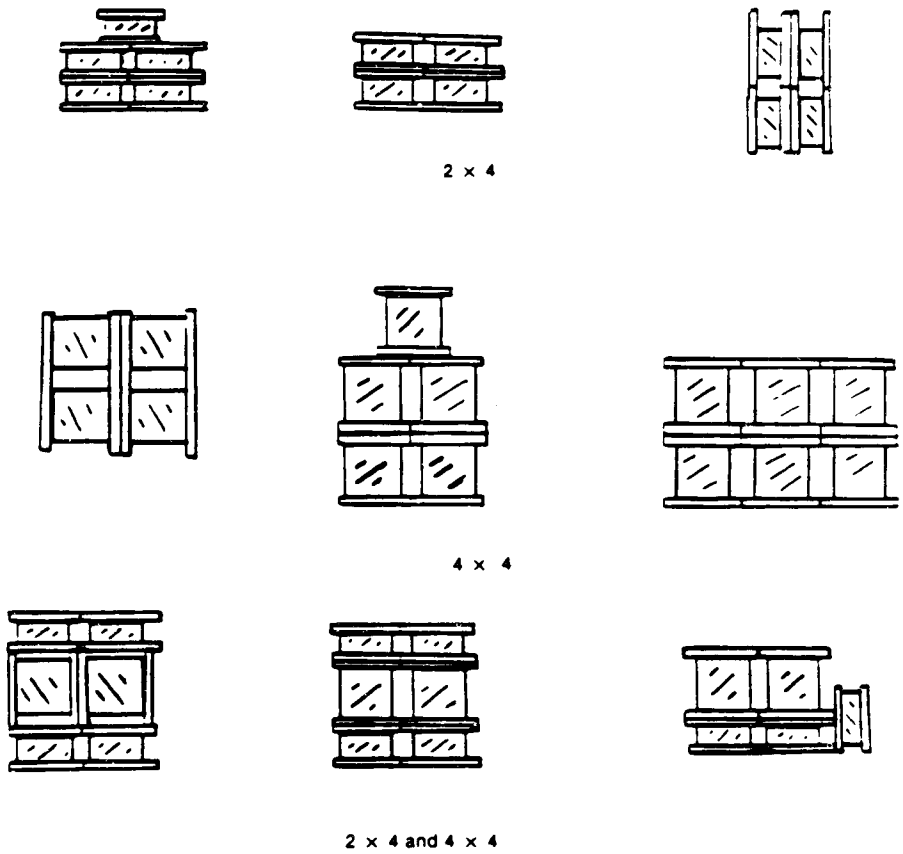

Figure 28 - 2. Test fuel crib arrangements

Appliance Identification

Appliance Manufacturer _____

Address _____

Agent and phone number _____

Name and Model number _____

Weight _____

Serial number _____

Design : Catalytic _____ Noncatalytic _____

Insert _____ Freestanding _____

Woodheater Description : (Attach figure showing air supplies and firebox configuration)

Materials of construction : _____

Air Introduction System : _____

Combustion Control Mechanisms : _____

Internal Baffles : _____

Other Features : _____

Catalyst Specifications

Manufacturer _____

Serial Number _____

Age _____ (Hours)

Dimensions _____ (in.)

Firebox Dimensions :

Volume _____ (ft^3)

Length _____ (in.)

Width _____ (in.)

Height _____ (in.)

Adjustments (Describe) _____ (in.)

Test Fuel Information
(For each Test Run)

Weight of Test Charge _____ (lb)

Number of 2 × 4's _____

Number of 4 × 4's _____

Length of test pieces _____ (in.)

Fuel Grade (Certification) _____

Fuel Moisture Content _____ (%)

Diagram or Photograph of Test Fuel Crib

Figure 28-3. Wood Heater and Test Fuel Information.

Date _____ Sheet _____ of _____

Operator _____

Sampling Method _____

Wood Heater Information

Manufacturer_____

Model_____

Primary Air Setting _____

Secondary Air Setting _____

Thermostat Setting _____

Other Settings _____

Test Run Information

Test Run No. _____

Burn Rate_____

Room Temperature before/after ____/____

Barometric Pressure before/after ____/____

Relative Humidity before/after ____/____

Room Air Velocity before/after ____/____

Surface Temp Average Pretest_____end_____

Test Run Time (minutes)	Test Fuel Scale Reading (lb)	Surface Temperature					Catalyst Temperature		Flue Draft (in. H_2O)
							Inlet (°F)	Outlet (°F)	
(Pretest Period)									
(Test Run Start)									

88704652R

Figure 28 - 4. Test run wood heater operation data sheet

FIGURE 28–5—EXAMPLE CALCULATION OF WEIGHTED AVERAGE EMISSION RATE

Burn rate category	Test number	Burn rate (Dry-kg/hr)	Emissions (g/hr)
1	1	0.65	5.0
2[1]	2	0.85	6.7
2	3	0.90	4.7
2	4	1.00	5.3
3	5	1.45	3.8
4	6	2.00	5.1

[1] As permitted in Section 6.6, this test run may be omitted from the calculation of the weighted average emission rate because three runs were conducted for this burn rate category.

Test number	Burn rate	P_i	E_i	K_i
1	0.65	0.121	5.0	0.300
2	0.90	0.300	4.7	0.259
3	1.00	0.380	5.3	0.422
4	1.45	0.722	3.8	0.532
5	2.00	0.912	5.1	0.278

$K_1 = P_2 - P_o = 0.300 - 0 = 0.300$

$K_2 = P_3 - P_1 = 0.380 - 0.121 = 0.259$

$K_3 = P_4 - P_2 = 0.722 - 0.300 = 0.422$

$K_4 = P_5 - P_3 = 0.912 - 0.380 = 0.532$

$K_5 = P_6 - P_4 = 1 - 0.722 = 0.278$

$$\sum_{i=1}^{n} K_i = 0.300 + 0.259 + 0.422 + 0.532 + 0.278$$

$$\sum_{i=1}^{n} = 1.791$$

$$E_w = \frac{\sum_{i=1}^{n} (K_i E_i)}{\sum_{i=1}^{n} K_i}$$

E_w equals (0.3)(5.0) + (0.259)(4.7) + (0.422)(5.3) + (0.532)(3.8) + (0.278)(5.1) divided by 1.791

E_w=4.69 g/hr.

TABLE 28–1—BURN RATE WEIGHTED PROBABILITIES FOR CALCULATING WEIGHTED AVERAGE EMISSION RATES

Burn rate (kg/hr-dry)	Cumulative Probability (P)
0.00	0.000
0.05	0.002
0.10	0.007
0.15	0.012
0.20	0.016
0.25	0.021
0.30	0.028
0.35	0.033
0.40	0.041
0.45	0.054
0.50	0.065
0.55	0.086
0.60	0.100
0.65	0.121
0.70	0.150
0.75	0.185
0.80	0.220
0.85	0.254
0.90	0.300
0.95	0.328

TABLE 28–1—BURN RATE WEIGHTED PROBABILITIES FOR CALCULATING WEIGHTED AVERAGE EMISSION RATES—Continued

Burn rate (kg/hr-dry)	Cumulative Probability (P)
1.00	0.380
1.05	0.407
1.10	0.460
1.15	0.490
1.20	0.550
1.25	0.572
1.30	0.620
1.35	0.654
1.40	0.695
1.45	0.722
1.50	0.750
1.55	0.779
1.60	0.800
1.65	0.825
1.70	0.840
1.75	0.857
1.80	0.875
1.85	0.882
1.90	0.895
1.95	0.906
2.00	0.912
2.05	0.920
2.10	0.925
2.15	0.932

TABLE 28–1—BURN RATE WEIGHTED PROBABILITIES FOR CALCULATING WEIGHTED AVERAGE EMISSION RATES—Continued

Burn rate (kg/hr-dry)	Cumulative Probability (P)
2.20	0.936
2.25	0.940
2.30	0.945
2.35	0.951
2.40	0.956
2.45	0.959
2.50	0.964
2.55	0.968
2.60	0.972
2.65	0.975
2.70	0.977
2.75	0.979
2.80	0.980
2.85	0.981
2.90	0.982
2.95	0.984
3.00	0.984
3.05	0.985
3.10	0.986
3.15	0.987
3.20	0.987
3.25	0.988
3.30	0.988
3.35	0.989
3.40	0.989
3.45	0.989
3.50	0.990
3.55	0.991
3.60	0.991
3.65	0.992
3.70	0.992
3.75	0.992
3.80	0.993
3.85	0.994
3.90	0.994
3.95	0.994
4.00	0.994
4.05	0.995
4.10	0.995
4.15	0.995
4.20	0.995
4.25	0.995
4.30	0.996
4.35	0.996
4.40	0.996
4.45	0.996
4.50	0.996
4.55	0.996
4.60	0.996
4.65	0.996
4.70	0.996
4.75	0.997
4.80	0.997
4.85	0.997
4.90	0.997
4.95	0.997
≥5.00	1.000

METHOD 28A—MEASUREMENT OF AIR TO FUEL RATIO AND MINIMUM ACHIEVABLE BURN RATES FOR WOOD-FIRED APPLIANCES

1. Applicability and Principle

1.1 Applicability. This method is applicable for the measurement of air to fuel ratios and minimum achievable burn rates, for determining whether a wood-fired appliance is an affected facility, as specified in 40 CFR 60.530.

1.2 Principle. A gas sample is extracted from a location in the stack of a wood-fired appliance while the appliance is operating at a prescribed set of conditions. The gas sample is analyzed for percent carbon dioxide (CO_2), percent oxygen (O_2), and percent carbon monoxide (CO). These stack gas components are measured for determining dry molecular weight of exhaust gas. Total moles of exhaust gas are determined stoichiometrically. Air to fuel ratio is determined by relating the mass of dry combustion air to the mass of dry fuel consumed.

2. Definitions

2.1 Burn Rate, Firebox, Secondary Air Supply, Test Facility, Test Fuel Charge, Test Fuel Crib, Test Fuel Loading Density, Test Fuel Piece, Test Run, Usable Firebox Volume, and Wood Heater. Same as Method 28, Sections 2.1 and 2.3 to 2.12.

2.2 Air to Fuel Ratio. Ratio of the mass of dry combustion air introduced into the firebox, to the mass of dry fuel consumed (grams of dry air per gram of dry wood burned).

3. Apparatus

3.1 Test Facility. Insulated Solid Pack Chimney, Platform Scale and Monitor, Room Temperature Monitor, Balance, Moisture Meter, Anemometer, Barometer, Draft Gauge, and Humidity Gauge. Same as Method 28, Sections 3.1, 3.2, and 3.4 to 3.10, respectively.

3.2 Sampling System. Probe, Condenser, Valve, Pump, Rate Meter, Flexible Bag, Pressure Gauge, and Vacuum Gauge. Same as Method 3, Sections 2.2.1 to 2.2.8, respectively. The sampling systems described in Method 5H, Sections 2.2.1, 2.2.2, and 2.2.3, may be used.

3.3 Analysis. Orsat analyzer, same as Method 3, Section 2.3; or instrumental analyzers, same as Method 5H, Sections 2.2.4 and 2.2.5, for CO_2 and CO analyzers, except use a CO analyzer with a range of 0 to 5 percent and use a CO_2 analyzer with a range of 0 to 5 percent. Use an O_2 analyzer capable of providing a measure of O_2 in the range of 0 to 25 percent by volume at least once every 10 minutes. Prepare cylinder gases for the three analyzers as described in Method 5H, Section 3.3.

4. Test Preparation

4.1 Test Facility, Wood Heater Appliance Installation, and Test Facility Conditions. Same as Method 28, Sections 4.1.1 and 4.1.2, respectively, with the exception that barometric dampers or other devices designed to introduce dilution air downstream of the firebox shall be sealed.

4.2 Wood Heater Air Supply Adjustments. This section describes how dampers are to be

set or adjusted and air inlet ports closed or sealed during Method 28A tests. The specifications in this section are intended to ensure that affected facility determinations are made on the facility configurations that could reasonably be expected to be employed by the user. They are also intended to prevent circumvention of the standard through the addition of an air port that would often be blocked off in actual use. These specifications are based on the assumption that consumers will remove such items as dampers or other closure mechanism stops if this can be done readily with household tools; that consumers will block air inlet passages not visible during normal operation of the appliance using aluminum tape or parts generally available at retail stores; and that consumers will cap off any threaded or flanged air inlets. They also assume that air leakage around glass doors, sheet metal joints or through inlet grilles visible during normal operation of the appliance would not be further blocked or taped off by a consumer.

It is not the intention of this section to cause an appliance that is clearly designed, intended, and, in most normal installations, used as a fireplace to be converted into a wood heater for purposes of applicability testing. Such a fireplace would be identifiable by such features as large or multiple glass doors or panels that are not gasketed, relatively unrestricted air inlets intended, in large part, to limit smoking and fogging of glass surfaces, and other aesthetic features not normally included in wood heaters.

4.2.1 Adjustable Air Supply Mechanisms. Any commercially available flue damper, other adjustment mechanism or other air inlet port that is designed, intended or otherwise reasonably expected to be adjusted or closed by consumers, installers, or dealers and which could restrict air into the firebox shall be set so as to achieve minimum air into the firebox, i.e., closed off or set in the most closed position.

Flue dampers, mechanisms and air inlet ports which could reasonably be expected to be adjusted or closed would include:

(a) All internal or externally adjustable mechanisms (including adjustments that affect the tightness of door fittings) that are accessible either before and/or after installation.

(b) All mechanisms, other inlet ports, or inlet port stops that are identified in the owner's manual or in any dealer literature as being adjustable or alterable. For example, an inlet port that could be used to provide access to an outside air duct but which is identified as being closable through use of additional materials whether or not they are supplied with the facility.

(c) Any combustion air inlet port or commercially available flue damper or mechanism stop, which would readily lend itself to closure by consumers who are handy with household tools by the removal of parts or the addition of parts generally available at retail stores (e.g., addition of a pipe cap or plug, addition of a small metal plate to an inlet hole on a nondecorative sheet metal surface, or removal of riveted or screwed damper stops).

(d) Any flue damper, other adjustment mechanisms or other air inlet ports that are found and documented in several (e.g., a number sufficient to reasonably conclude that the practice is not unique or uncommon) actual installations as having been adjusted to a more closed position, or closed by consumers, installers, or dealers.

4.2.2 Air Supply Adjustments During Test. The test shall be performed with all air inlets identified under this section in the closed or most closed position or in the configuration which otherwise achieves the lowest air inlet (e.g., greatest blockage).

For the purposes of this section, air flow shall not be minimized beyond the point necessary to maintain combustion or beyond the point that forces smoke into the room.

Notwithstanding Section 4.2.1, any flue damper, adjustment mechanism or air inlet port (whether or not equipped with flue dampers or adjusting mechanisms) that is visible during normal operation of the appliance and which could not reasonably be closed further or blocked except through means that would significantly degrade the aesthetics of the facility (e.g., through use of duct tape) will not be closed further or blocked.

4.3 Test Fuel Properties and Test Fuel Charge Specifications. Same as Method 28, Sections 4.2 to 4.3, respectively.

4.4 Sampling System.

4.4.1 Sampling Location. Same as Method 5H, Section 5.1.2.

4.4.2 Sampling System Set Up. Set up the sampling equipment as described in Method 3, Section 3.2, or as in Method 3A, Section 7.

5. Procedures

5.1 Pretest Preparation. Same as Method 28, Sections 6.2.1 and 6.2.3 to 6.2.5.

5.2 Pretest Ignition. Same as Method 28, Section 6.3. Set the wood heater air supply settings to achieve a burn rate in Category 1 or the lowest achievable burn rate (see Section 4.2).

5.3 Test Run. Same as Method 28, Section 6.4. Begin sample collection at the start of the test run as defined in Method 28, Section 6.4.1. If Method 3 is used, collect a minimum of two bag samples simultaneously at a constant sampling rate for the duration of the test run. A minimum sample volume of 30 1 per bag is recommended. If instrumental gas concentration measurement procedures are used, conduct the gas measurement system performance specifications checks as described in Method 5H, Sections 6.7, 6.8, and 6.9. The zero drift and calibration drift limits

for all three analyzers shall be 0.2 percent O_2, CO_2, or CO, as applicable, or less. Other measurement system performance specifications are as defined in Method 5H, Section 4. Sample at a constant rate for the duration of the test run.

5.3.1 Data Recording. Record wood heater operational data, test facility temperature, sample train flow rate, and fuel weight data at 10-minute intervals.

5.3.2 Test Run Completion. Same as Method 28, Section 6.4.6.

5.4 Analysis Procedure.

5.4.1 Method 3 Integrated Bag Samples. Within 4 hours after the sample collection, analyze each bag sample for percent CO_2, O_2, and CO using an Orsat analyzer as described in Method 3, Sections 4.2.5 through 4.2.7.

5.4.2 Instrumental Analyzers. Average the percent CO_2, CO, and O_2 values for the test run.

5.5 Quality Control Procedures.

5.5.1 Data Validation. The following quality control procedure is suggested to provide a check on the quality of the data.

5.5.1.1 Calculate a fuel factor, F_0, using the following equation:

$$F_o = \left(\frac{20.9 - \%O_2}{\%CO_2} \right) \qquad \text{Eq. 28a-4}$$

where:

$\%O_2$ Percent O_2 by volume (dry basis).
$\%CO_2$ Percent CO_2 by volume (dry basis).
20.9 Percent O_2 by volume in ambient air.

If CO is present in quantities measurable by this method, adjust the O_2 and CO_2 values before performing the calculation for F_0 as follows:

$\%CO_2\ (adj) = \%CO_2 + \%CO$
$\%O_2\ (adj) = \%O_2 - 0.5\ \%CO$

where:

%CO = Percent CO by volume (dry basis).

5.5.1.2 Compare the calculated F_0 factor with the expected F_0 range for wood (1.000 - 1.120). Calculated F_0 values beyond this acceptable range should be investigated before accepting the test results. For example, the strength of the solutions in the gas analyzer and the analyzing technique should be checked by sampling and analyzing a known concentration, such as air. If no detectable or correctable measurement error can be identified, the test should be repeated. Alternatively, determine a range of air to fuel ratio results that could include the correct value by using an F_0 value of 1.05 and calculating a potential range of CO_2 and O_2 values. Acceptance of such results will be based on whether the calculated range includes the exemption limit and the judgment of the administrator.

5.5.1.3 Method 3 Analyses. Compare the results of the analyses of the two bag samples. If all the gas components (O_2, CO, and CO_2) values for the two analyses agree within 0.5 percent (e.g., 6.0 percent O_2 for bag 1 and 6.5 percent O_2 for bag 2, agree within 0.5 percent), the results of the bag analyses may be averaged for the calculations in Section 6. If the analysis results do not agree within 0.5 percent for each component, calculate the air-to-fuel ratio using both sets of analyses and report the results.

6. Calculations

Carry out calculations, retaining at least one extra decimal figure beyond that of the acquired data. Round off figure after the final calculation. Other forms of the equations may be used as long as they give equivalent results.

6.1 Nomenclature.

M_d=Dry molecular weight, g/g-mole(lb/lb-mole).
$\%CO_2$=Percent CO_2 by volume (dry basis).
$\%O_2$=Percent O_2 by volume (dry basis).
%CO=Percent CO by volume (dry basis).
$\%N_2$=Percent N_2 by volume (dry basis).
N_T=Total gram-moles of dry exhaust gas per kg of wood burned (lb-moles/lb).
Y_{CO2}=Measured mole fraction of CO_2 (e.g., 10 percent CO_2=.10 mole fraction), g/g-mole (lb/lb-mole).
Y_{CO}=Measured mole fraction of CO (e.g., 1 percent CO=.01 mole fraction), g/g-mole (lb/lb-mole).
Y_{HC}=Assumed mole fraction of HC (dry as CH_4)
=0.0088 for catalytic wood heaters;
=0.0132 for noncatalytic wood heaters.
=0.0080 for pellet-fired wood heaters.
0.280=Molecular weight of N_2 or CO, divided by 100.
0.320=Molecular weight of O_2 divided by 100.
0.440=Molecular weight of CO_2 divided by 100.
42.5=Gram-moles of carbon in 1 kg of dry wood assuming 51 percent carbon by weight dry basis (.0425 lb/lb).
510=Grams of carbon in exhaust gas per kg of wood burned.
1,000=Grams in 1 kg.

6.2 Dry Molecular Weight. Use Equation 28a–1 to calculate the dry molecular weight of the stack gas.

M_d=0.440(%CO_2)+0.320(%$O)_2$)+0.280(%N_2+%CO) Eq. 28a–1

NOTE: The above equation does not consider argon in air (about 0.9 percent, molecular weight of 37.7). A negative error of about 0.4 percent is introduced. The tester may opt to include argon in the analysis using procedures subject to approval of the Administrator.

6.3 Dry Moles of Exhaust Gas. Use Equation 28a–2 to calculate the total moles of dry exhaust gas produced per kilogram of dry wood burned.

$$N_T = \left(\frac{42.5}{\left(Y_{CO2} + Y_{CO} + Y_{HC}\right)} \right) \quad \text{Eq. 28a-2}$$

6.4 Air to Fuel Ratio. Use Equation 28a–3 to calculate the air to fuel ratio on a dry mass basis.

$$A/F = \left(\frac{\left(N_T \times M_d\right) - (510)}{(1000)} \right) \quad \text{Eq. 28a-3}$$

6.5 Burn Rate. Calculate the fuel burn rate as in Method 28, Section 8.3.

7. Bibliography

Same as Method 3, Section 7, and Method 5H, Section 7.

METHOD 29—DETERMINATION OF METALS EMISSIONS FROM STATIONARY SOURCES

1. Applicability and Principle

1.1 Applicability. This method is applicable to the determination of antimony (Sb), arsenic (As), barium (Ba), beryllium (Be), cadmium (Cd), chromium (Cr), cobalt (Co), copper (Cu), lead (Pb), manganese (Mn), mercury (Hg), nickel (Ni), phosphorus (P), selenium (Se), silver (Ag), thallium (T1), and zinc (Zn) emissions from stationary sources. This method may be used to determine particulate emissions in addition to the metals emissions if the prescribed procedures and precautions are followed.

1.1.1 Hg emissions can be measured, alternatively, using EPA Method 101A of Appendix B, 40 CFR Part 61. Method 101–A measures only Hg but it can be of special interest to sources which need to measure both Hg and Mn emissions.

1.2 Principle. A stack sample is withdrawn isokinetically from the source, particulate emissions are collected in the probe and on a heated filter, and gaseous emissions are then collected in an aqueous acidic solution of hydrogen peroxide (analyzed for all metals including Hg) and an aqueous acidic solution of potassium permanganate (analyzed only for Hg). The recovered samples are digested, and appropriate fractions are analyzed for Hg by cold vapor atomic absorption spectroscopy (CVAAS) and for Sb, As, Ba, Be, Cd, Cr, Co, Cu, Pb, Mn, Ni, P, Se, Ag, Tl, and Zn by inductively coupled argon plasma emission spectroscopy (ICAP) or atomic absorption spectroscopy (AAS). Graphite furnace atomic absorption spectroscopy (GFAAS) is used for analysis of Sb, As, Cd, Co, Pb, Se, and Tl if these elements require greater analytical sensitivity than can be obtained by ICAP. If one so chooses, AAS may be used for analysis of all listed metals if the resulting in-stack method detection limits meet the goal of the testing program. Similarly, inductively coupled plasma-mass spectroscopy (ICP–MS) may be used for analysis of Sb, As, Ba, Be, Cd, Cr, Co, Cu, Pb, Mn, Ni, As, Tl and Zn.

2. Range, Detection Limits, Precision, and Interferences

2.1 Range. For the analysis described and for similar analyses, the ICAP response is linear over several orders of magnitude. Samples containing metal concentrations in the nanograms per ml (ng/ml) to micrograms per ml (µg/ml) range in the final analytical solution can be analyzed using this method. Samples containing greater than approximately 50 µg/ml As, Cr, or Pb should be diluted to that level or lower for final analysis. Samples containing greater than approximately 20 µg/ml of Cd should be diluted to that level before analysis.

2.2 Analytical Detection Limits. (NOTE: See section 2.3 for the description of in-stack detection limits.)

2.2.1 ICAP analytical detection limits for the sample solutions (based on Method 6010 in EPA Publication SW–846, Third Edition (November 1986) including updates I, II, IIA, and IIB, as incorporated by reference in §60.17(i)) are approximately as follows: Sb (32 ng/ml), As (53 ng/ml), Ba (2 ng/ml), Be (0.3 ng/ml), Cd (4 ng/ml), Cr (7 ng/ml), Co (7 ng/ml), Cu (6 ng/ml), Pb (42 ng/ml), Mn (2 ng/ml), Ni (15 ng/ml), P (75 ng/ml), Se (75 ng/ml), Ag (7 ng/ml), Tl (40 ng/ml), and Zn (2 ng/ml). ICP–MS analytical detection limits (based on based on Method 6020 in EPA Publication SW–846, Third Edition (November 1986) as incorporated by reference in §60.17(i)) are lower generally by a factor of ten or more. Be is lower by a factor of three. The actual sample analytical detection limits are sample dependent and may vary due to the sample matrix.

2.2.2 The analytical detection limits for analysis by direct aspiration AAS are approximately as follow: Sb (200 ng/ml), As (2 ng/ml), Ba (100 ng/ml), Be (5 ng/ml), Cd (5 ng/ml), Cr (50 ng/ml), Co (50 ng/ml), Cu (20 ng/ml), Pb (100 ng/ml), Mn (10 ng/ml), Ni (40 ng/ml), Se (2 ng/ml), Ag (10 ng/ml), Tl (100 ng/ml), and Zn (5 ng/ml).

2.2.3 The detection limit for Hg by CVAAS (on the resultant volume of the *disgestion* of the aliquots taken for Hg analyses) can be approximately 0.02 to 0.2ng/ml, depending upon the type of CVAAS analytical instrument used.

2.2.4 The use of GFAAS can enhance the detection limits compared to direct aspiration AAS as follows: Sb (3 ng/ml), As (1 ng/ml), Be (0.2 ng/ml), Cd (0.1 ng/ml), Cr (1 ng/ml), Co (1 ng/ml), Pb (1 ng/ml), Se (2 ng/ml), and T1 (ng/ml).

2.3 *In-stack Detection Limits.*

2.3.1 For test planning purposes in-stack detection limits can be developed by using the following information (1) the procedures

described in this method, (2) the analytical detection limits described in Section 2.2 and in EPA Publication SW–846, Third Edition (November 1986) including updates I, II, IIA and IIB, as incorporated by reference in §60.17(i), (3) the normal volumes of 300 ml (Analytical Fraction 1) for the front-half and 150 ml (Analytical Fraction 2A) for the back-half samples, and (4) a stack gas sample volume of 1.25 m^3. The resultant in-stack method detection limits for the above set of conditions are presented in Table 29–1 and were calculated by using Eq. 29–1.

$$A \times B/C = D \qquad \text{Eq. 29–1}$$

Where:

A=Analytical detectin limit, μg/ml.
B=Liquid volume of digested sample prior to aliquotting for analysis, Ml.
C=Stack sample gas volume, dsm^3.
D=In-stack detection limit, μg/m^3.

TABLE 29–1.—IN-STACK METHOD DETECTION LIMITS (μG/M^3) FOR THE FRONT-HALF, THE BACK-HALF, AND THE TOTAL SAMPLING TRAIN USING ICAP AND AAS

Metal	Front-half: Probe and filter	Back-half: Impingers 1–3	Back-half: Impingers (4–6)[a]	Total train:
Antimony	[1] 7.7 (0.7)	[1] 3.8 (0.4)		[1] 11.5 (1.1)
Arsenic	[1] 12.7 (0.3)	[1] 6.4 (0.1)		[1] 19.1 (0.4)
Barium	0.5	0.3		0.8
Beryllium	[1] 0.07 (0.05)	[1] 0.04 (0.03)		[1] 0.11 (0.08)
Cadmium	[1] 1.0 (0.02)	[1] 0.5 (0.01)		[1] 1.5 (0.03)
Chromium	[1] 1.7 (0.2)	[1] 0.8 (0.1)		[1] 2.5 (0.3)
Cobalt	[1] 1.7 (0.2)	[1] 0.8 (0.1)		[1] 2.5 (0.3)
Copper	1.4	0.7		2.1
Lead	[1] 10.1 (0.2)	[1] 5.0 (0.1)		[1] 15.1 (0.3)
Manganese	[1] 0.5 (0.2)	[1] 0.2 (0.1)		[1] 0.7 (0.3)
Mercury	[2] 0.06	[2] 0.3	[2] 0.2	[2] 0.56
Nickel	3.6	1.8		5.4
Phosphorus	18	9		27
Selenium	[1] 18 (0.5)	[1] 9 (0.3)		[1] 27 (0.8)
Silver	1.7	0.9		2.6
Thallium	[1] 9.6 (0.2)	[1] 4.8 (0.1)		[1] 14.4 (0.3)
Zinc	0.5	0.3		0.8

[a] Mercury analysis only.
[1] Detection limit when analyzed by GFAAS.
[2] Detection limit when analyzed by CVAAS, estimated for Back-Half and Total Train. See Sections 2.2 and 5.4.3.
Note: Actual method in-stack detection limits may vary from these values, as described in Section 2.3.3.

2.3.2 To ensure optimum precision/resolution in the analyses, the target concentrations of metals in the analytical solutions should be at least ten times their respective analytical detection limits. Under certain conditions, and with greater care in the analytical procedure, these concentrations can be as low as approximately three times the respective analytical detection limits without seriously impairing the precision of the analyses. On at least one sample run in the source test, and for each metal analyzed, perform either repetitive analyses, Method of Standard Additions, serial dilution, or matrix spike addition, etc., to document the quality of the data.

2.3.3 Actual in-stack method detection limits are based on actual source sampling parameters and analytical results as described above. If required, the method in-stack detection limits can be improved over those shown in Table 29–1 for a specific test by either increasing the sampled stack gas volume, reducing the total volume of the digested samples, improving the analytical detection limits, or any combination of the three. For extremely low levels of *Hg only*, the aliquot size selected for digestion and analysis can be increased to as much as 10 ml, thus improving the in-stack detection limit by a factor of ten compared to a 1 ml aliquot size.

2.3.3.1 A nominal one hour sampling run will collect a stack gas sampling volume of about 1.25 m^3. If the sampling time is increased to four hours and 5 m^3 are collected, the in-stack method detection limits would be improved by a factor of four compared to the values shown in Table 29–1.

2.3.3.2 The in-stack detection limits assume that all of the sample is digested and the final liquid volumes for analysis are the normal values of 300 ml for Analytical Fraction 1, and 150 ml for Analytical Fraction 2A. If the volume of Analytical Fraction 1 is reduced from 300 to 30 ml, the in-stack detection limits for that fraction of the sample would be improved by a factor of ten. If the volume of Analytical Fraction 2A is reduced from 150 to 25 ml, the in-stack detection limits for that fraction of the sample would be improved by a factor of six. Matrix effect checks are necessary on sample analyses and typically are of much greater significance for samples that have been concentrated to

less than the normal original sample volume. Reduction of Analytical Fractions 1 and 2A to volumes of less than 30 and 25 ml, respectively, could interfere with the redissolving of the residue and could increase interference by other compounds to an intolerable level.

2.3.3.3 When both of the modifications described in Sections 2.3.3.1 and 2.3.3.2 are used simultaneously on one sample, the resultant improvements are multiplicative. For example, an increase in stack gas volume by a factor of four and a reduction in the total liquid sample digested volume of both Analytical Fractions 1 and 2A by a factor of six would result in an improvement by a factor of twenty-four of the in-stack method detection limit.

2.4 Precision. The precision (relative standard deviation) for each metal detected in a method development test performed at a sewage sludge incinerator were found to be as follows: Sb (12.7 percent), As (13.5 percent), Ba (20.6 percent), Cd (11.5 percent), Cr (11.2 percent), Cu (11.5 percent), Pb (11.6 percent), P (14.6 percent), Se (15.3 percent), Tl (12.3 percent), and Zn (11.8 percent). The precision for Ni was 7.7 percent for another test conducted at a source simulator. Be, Mn, and Ag were not detected in the tests. However, based on the analytical detection limits of the ICAP for these metals, their precisions could be similar to those for the other metals when detected at similar levels.

2.5 Interferences. Iron (Fe) can be a spectral interference during the analysis of As, Cr, and Cd by ICAP. Aluminum (Al) can be a spectral interference during the analysis of As and Pb by ICAP. Generally, these interferences can be reduced by diluting the analytical sample, but such dilution raises the in-stack detection limits. Background and overlap corrections may be used to adjust for spectral interferences. Refer to Method 6010 in EPA Publication SW–846 Third Edition (November 1986) including updates I, II, IIA and IIB, as incorporated by reference in §60.17(i) the other analytical methods used for details on potential interferences to this method. For all GFAAS analyses, use matrix modifiers to limit interferences, and matrix match all standards.

3. Apparatus

3.1 Sampling. A schematic of the sampling train is shown in Figure 29–1. It has general similarities to the Method 5 train.

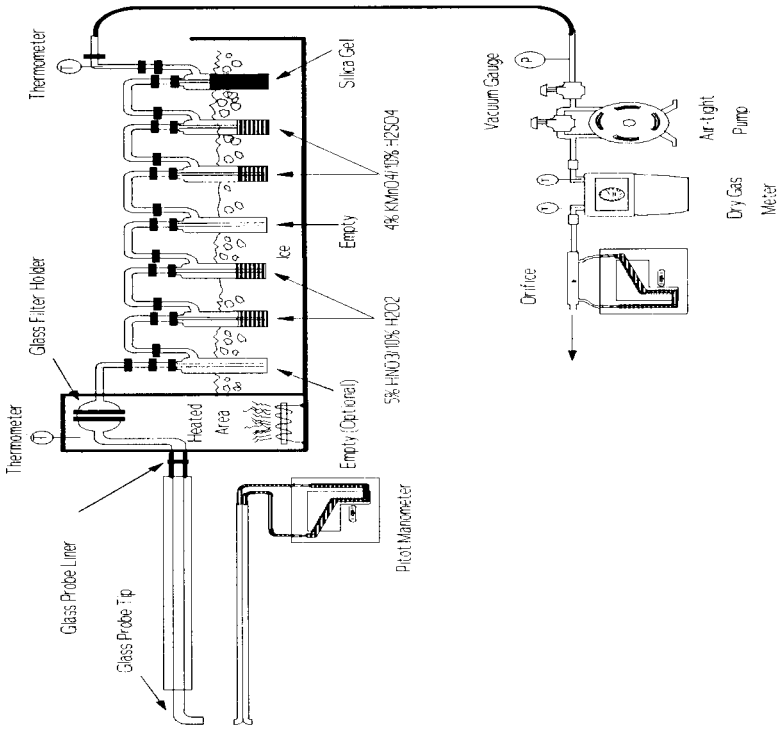

Figure 29-1. Sampling train.

3.1.1 Probe Nozzle (Probe Tip) and Borosilicate or Quartz Glass Probe Liner. Same as Method 5, Sections 2.1.1 and 2.1.2, except that glass nozzles are required unless alternate tips are constructed of materials that are free from contamination and will not interfere with the sample. If a probe tip other than glass is used, no correction to the

sample test results to compensate for the nozzle's effect on the sample is allowed. Probe fittings of plastic such as Teflon, polypropylene, etc. are recommended instead of metal fittings to prevent contamination. If one chooses to do so, a single glass piece consisting of a combined probe tip and probe liner may be used.

3.1.2 Pitot Tube and Differential Pressure Gauge. Same as Method 2, Sections 2.1 and 2.2, respectively.

3.1.3 Filter Holder. Glass, same as Method 5, Section 2.1.5, except use a Teflon filter support or other non-metallic, non-contaminating support in place of the glass frit.

3.1.4 Filter Heating System. Same as Method 5, Section 2.1.6.

3.1.5 Condenser. Use the following system for condensing and collecting gaseous metals and determining the moisture content of the stack gas. The condensing system shall consist of four to seven impingers connected in series with leak-free ground glass fittings or other leak-free, non-contaminating fittings. Use the first impinger as a moisture trap. The second impinger (which is the first HNO_3/H_2O_2 impinger) shall be identical to the first impinger in Method 5. The third impinger (which is the second HNO_3/H_2O_2 impinger) shall be a Greenburg Smith impinger with the standard tip as described for the second impinger in Method 5, Section 2.1.7. The fourth (empty) impinger and the fifth and sixth (both acidified $KMnO_4$) impingers are the same as the first impinger in Method 5. Place a thermometer capable of measuring to within 1 °C (2 °F) at the outlet of the last impinger. If no Hg analysis is planned, then the fourth, fifth, and sixth impingers are not used.

3.1.6 Metering System, Barometer, and Gas Density Determination Equipment. Same as Method 5, Sections 2.1.8 through 2.1.10, respectively.

3.1.7 Teflon Tape. For capping openings and sealing connections, if necessary, on the sampling train.

3.2. Sample Recovery. Same as Method 5, Sections 2.2.1 through 2.2.8 (Probe-Liner and Probe-Nozzle Brushes or Swabs, Wash Bottles, Sample Storage Containers, Petri Dishes, Glass Graduated Cylinder, Plastic Storage Containers, Funnel and Rubber Policeman, and Glass Funnel), respectively, with the following exceptions and additions:

3.2.1 Non-metallic Probe-Liner and Probe-Nozzle Brushes or Swabs. Use non-metallic probe-liner and probe-nozzle brushes or swabs for quantitative recovery of materials collected in the front-half of the sampling train.

3.2.2 Sample Storage Containers. Use glass bottles (see the *Precaution:* in Section 4.3.2 of this Method) with Teflon-lined caps that are non-reactive to the oxidizing solutions, with capacities of 1000- and 500-ml, for storage of acidified $KMnO_4$- containing samples and blanks. Glass or polyethylene bottles may be used for other sample types.

3.2.3 Graduated Cylinder. Glass or equivalent.

3.2.4 Funnel. Glass or equivalent.

3.2.5 Labels. For identifying samples.

3.2.6 Polypropylene Tweezers and/or Plastic Gloves. For recovery of the filter from the sampling train filter holder.

3.3 Sample Preparation and Analysis.

3.3.1 Volumetric Flasks, 100-ml, 250-ml, and 100-ml. For preparation of standards and sample dilutions.

3.3.2 Graduated Cylinders. For preparation of reagents.

3.3.3 Parr[R] Bombs or Microwave Pressure Relief Vessels with Capping Station (CEM Corporation model or equivalent). For sample digestion.

3.3.4 Beakers and Watch Glasses. 250-ml beakers, with watch glass covers, for sample digestion.

3.3.5 Ring Stands and Clamps. For securing equipment such as filtration apparatus.

3.3.6 Filter Funnels. For holding filter paper.

3.3.7 Disposable Pasteur Pipets and Bulbs.

3.3.8 Volumetric Pipets.

3.3.9 Analytical Balance. Accurate to within .01 mg.

3.3.10 Microwave or Conventional Oven. For heating samples at fixed power levels or temperatures, respectively.

3.3.11 Hot Plates.

3.3.12 Atomic Absorption Spectrometer (AAS). Equipped with a background corrector.

3.3.12.1 Graphite Furnace Attachment. With Sb, As, Cd, Co, Pb, Se, and Tl hollow cathode lamps (HCLs) or electrodeless discharge lamps (EDLs). Same as Methods 7041 (Sb), 7060 (As), 7131 (Cd), 7201 (Co), 7421 (Pb), 7740 (Se), and 7841 (Tl) in EPA publication SW–846 Third Edition (November 1986) including updates I, II, IIA and IIB, as incorporated by reference in §60.17(i).

3.3.12.2 Cold Vapor Mercury Attachment. With a mercury HCL or EDL, an air recirculation pump, a quartz cell, an aerator apparatus, and a heat lamp or desiccator tube. The heat lamp shall be capable of raising the temperature at the quartz cell by 10 °C above ambient, so that no condensation forms on the wall of the quartz cell. Same as Method 6020 in EPA publication SW–846 Third Edition (November 1986) including updates I, II, IIA and IIB, as incorporated by reference in §60.17(i). See NOTE NO. 2: Section 5.4.3 for other acceptable approaches for analysis of Hg in which analytical detection limits of 0.002 ng/ml were obtained.

3.3.13 Inductively Coupled Argon Plasma Spectrometer. With either a direct or sequential reader and an alumina torch. Same as EPA Method 6010 in EPA publication SW–846 Third Edition (November 1986) including

updates I, II, IIA and IIB, as incorporated by reference in §60.17(i).

3.3.14 Inductively Coupled Plasma-Mass Spectrometer. Same as EPA Method 6020 in EPA publication SW–846 Third Edition (November 1986) including updates I, II, IIA and IIB, as incorporated by reference in §60.17(i).

4. Reagents

4.1 Unless otherwise indicated, it is intended that all reagents conform to the specifications established by the Committee on Analytical Reagents of the American Chemical Society, where such specifications are available. Otherwise, use the best available grade.

4.2 Sampling Reagents.

4.2.1 Sample Filters. Without organic binders. The filters shall contain less than 1.3 μg/in.^{2} of each of the metals to be measured. Analytical results provided by filter manufacturers stating metals content of the filters are acceptable. However, if no such results are available, analyze filter blanks for each target metal prior to emission testing. Quartz fiber filters meeting these requirements are recommended. However, if glass fiber filters become available which meet these requirements, they may be used. Filter efficiencies and unreactiveness to sulfur dioxide (SO_2) or sulfur trioxide (SO_3) shall be as described in Section 3.1.1 of Method 5.

4.2.2 Water. To conform to ASTM Specification D1193–77, Type II (incorporated by reference—See §60.17). If necessary, analyze the water for all target metals prior to field use. All target metals should be less than 1 ng/ml.

4.2.3 Nitric Acid (HNO_3). Concentrated. Baker Instra-analyzed or equivalent.

4.2.4 Hydrochloric Acid (HCL). Concentrated. Baker Instra-analyzed or equivalent.

4.2.5 Hydrogen Peroxide (H_2O_2), 30 Percent (V/V).

4.2.6 Potassium Permanganate ($KMnO_4$).

4.2.7 Sulfuric Acid (H_2SO_4). Concentrated.

4.2.8 Silica Gel and Crushed Ice. Same as Method 5, Sections 3.1.2 and 3.1.4, respectively.

4.3 Pretest Preparation of Sampling Reagents.

4.3.1 HNO_3/H_2O_2 Absorbing Solution, 5 Percent HNO_3/10 Percent H_2O_2. Add carefully with stirring 50 ml of concentrated HNO_3 to a 1000-ml volumeric flask containing approximately 500 ml of water, and then add carefully with stirring 333 ml of 30 percent H_2O_2. Dilute to volume with water. Mix well. This reagent shall contain less than 2 ng/ml of each target metal.

4.3.2 Acidic $KMnO_4$ Absorbing Solution, 4 Percent $KMnO_4$ (W/V), 10 Percent H_2SO_4 (V/V). Prepare fresh daily. Mix carefully, with stirring, 100 ml of concentrated H_2SO_4 into approximately 800 ml of water, and add water with stirring to make a volume of 1 liter: this solution is 10 percent H_2SO_4 (V/V). Dissolve, with stirring, 40 g of $KMnO_4$ into 10 percent H_2SO_4 (V/V) and add 10 percent H_2SO_4 (V/V) with stirring to make a volume of 1 liter. Prepare and store in glass bottles to prevent degradation. This reagent shall contain less than 2 ng/ml of Hg.

Precaution: To prevent autocatalytic decomposition of the permanganate solution, filter the solution through Whatman 541 filter paper. Also, due to the potential reaction of the potassium permanganate with the acid, there could be pressure buildup in the solution storage bottle. Therefore these bottles shall not be fully filled and shall be vented to relieve excess pressure and prevent explosion potentials. Venting is required, but not in a manner that will allow contamination of the solution. A No. 70–72 hole drilled in the container cap and Teflon liner has been used.

4.3.3 HNO_3, 0.1 N. Add with stirring 6.3 ml of concentrated HNO_3 (70 percent) to a flask containing approximately 900 ml of water. Dilute to 1000 ml with water. Mix well. This reagent shall contain less than 2 ng/ml of each target metal.

4.3.4 HCl, 8 N. Carefully add with stirring 690 ml of concentrated HCl to a flask containing 250 ml of water. Dilute to 1000 ml with water. Mix well. This reagent shall contain less than 2 ng/ml of Hg.

4.4 Glassware Cleaning Reagents.

4.4.1 HNO_3, Concentrated. Fisher ACS grade or equivalent.

4.4.2 Water. To conform to ASTM Specification D1193–77, Type II (incorporated by reference—See §60.17).

4.4.3 HNO_3, 10 Percent (V/V). Add with stirring 500 ml of concentrated HNO_3 to a flask containing approximately 4000 ml of water. Dilute to 5000 ml with water. Mix well. This reagent shall contain less than 2 ng/ml of each target metal.

4.5 Sample Digestion and Analysis Reagents.

The metals standards, except Hg, may also be made from solid chemicals as described in Citation 3 of the Bibliography. Refer to Citations 1, 2, or 5 of the Bibliography for additional information on Hg standards. The 1000 μg/ml Hg stock solution standard may be made according to Section 6.2.5 of Method 101A.

4.5.1 HCL, Concentrated.

4.5.2 Hydrofluoric Acid (HF), Concentrated.

4.5.3 HNO_3, Concentrated. Baker Instra-analyzed or equivalent.

4.5.4 HNO_3, 50 Percent (V/V). Add with stirring 125 ml of concentrated HNO_3 to 100 ml of water. Dilute to 250 ml with water. Mix well. This reagent shall contain less than 2 ng/ml of each target metal.

4.5.5 HNO_3, 5 Percent (V/V). Add with stirring 50 ml of concentrated HNO_3 to 800 ml of water. Dilute to 1000 ml with water. Mix

well. This reagent shall contain less than 2 ng/ml of each target metal.

4.5.6 Water. To conform to ASTM Specification D1193–77, Type II (incorporated by reference—See §60.17).

4.5.7 Hydroxylamine Hydrochloride and Sodium Chloride Solution. See Citation 2 of the Bibliography for preparation.

4.5.8 Stannous Chloride. See Citation 2 of the Bibliography for preparation.

4.5.9 $KMnO_4$, 5 Percent (W/V). See Citation 2 of the Bibliography for preparation.

4.5.10 H_2SO_4, Concentrated.

4.5.11 Potassium Persulfate, 5 Percent (W/V). See Citation 2 of the Bibliography for preparation.

4.5.12 Nickel Nitrate, Ni $(NO_3)_2$ $6H_2O$.

4.5.13 Lanthanum Oxide, La_2 O_3.

4.5.14 Hg Standard (AAS Grade), 1000 µg/ml.

4.5.15 Pb Standard (AAS Grade), 1000 µg/ml.

4.5.16 As Standard (AAS Grade), 1000 µg/ml.

4.5.17 Cd Standard (AAS Grade), 1000 µg/ml.

4.5.18 Cr Standard (AAS Grade), 1000 µg/ml.

4.5.19 Sb Standard (AAS Grade), 1000 µg/ml.

4.5.20 Ba Standard (AAS Grade), 1000 µg/ml.

4.5.21 Be Standard (AAS Grade), 1000 µg/ml.

4.5.22 Co Standard (AAS Grade), 1000 µg/ml.

4.5.23 Cu Standard (AAS Grade), 1000 µg/ml.

4.5.24 Mn Standard (AAS Grade), 1000 µg/ml.

4.5.25 Ni Standard (AAS Grade), 1000 µg/ml.

4.5.26 P Standard (AAS Grade), 1000 µg/ml.

4.5.27 Se Standard (AAS Grade), 1000 µg/ml.

4.5.28 Ag Standard (AAS Grade), 1000 µg/ml.

4.5.29 Tl Standard (AAS Grade), 1000 µg/ml.

4.5.30 Zn Standard (AAS Grade), 1000 µg/ml.

4.5.31 Al Standard (AAS Grade), 1000 µg/ml.

4.5.32 Fe Standard (AAS Grade), 1000 µg/ml.

4.5.33 Hg Standards and Quality Control Samples. Prepare fresh weekly a 10 µg/ml intermediate Hg standard by adding 5 ml of 1000 µg/ml Hg stock solution prepared according to Method 101A to a 500-ml volumetric flask; dilute with stirring to 500 ml by first carefully adding 20 ml of 15 percent HNO_3 and then adding water to the 500-ml volume. Mix well. Prepare a 200 ng/ml working Hg standard solution fresh daily: add 5 ml of the 10 µg/ml intermediate standard to a 250-ml volumetric flask, and dilute to 250 ml with 5 ml of 4 percent $KMnO_4$, 5 ml of 15 percent HNO_3, and then water. Mix well. Use at least five separate aliquots of the working Hg standard solution and a blank to prepare the standard curve. These aliquots and blank shall contain 0.0, 1.0, 2.0, 3.0, 4.0, and 5.0 ml of the working standard solution containing 0, 200, 400, 600, 800, and 1000 ng Hg, respectively. Prepare quality control samples by making a separate 10 µg/ml standard and diluting until in the calibration range.

4.5.34 ICAP Standards and Quality Control Samples. Calibration standards for ICAP analysis can be combined into four different mixed standard solutions as follows:

MIXED STANDARD SOLUTIONS FOR ICAP ANALYSIS

Solution	Elements
I	As, Be, Cd, Mn, Pb, Se, Zn.
II	Ba, Co, Cu, Fe.
III	Al, Cr, Ni.
IV	Ag, P, Sb, Tl.

Prepare these standards by combining and diluting the appropriate volumes of the 1000 µg/ml solutions with 5 percent HNO_3. A minimum of one standard and a blank can be used to form each calibration curve. However, prepare a separate quality control sample spiked with known amounts of the target metals in quantities in the mid-range of the calibration curve. Suggested standard levels are 25 µg/ml for Al, Cr and Pb, 15 µg/ml for Fe, and 10 µg/ml for the remaining elements. Prepare any standards containing less than 1 µg/ml of metal on a daily basis. Standards containing greater than 1 µg/ml of metal should be stable for a minimum of 1 to 2 weeks. For ICP–MS, follow Method 6020 in EPA Publication SW–846 Third Edition (November 1986) including updates I, II, IIA and IIB, as incorporated by reference in §60.17(i).

4.5.35 GFAAS Standards. Sb, As, Cd, Co, Pb, Se, and Tl. Prepare a 10 µg/ml standard by adding 1 ml of 1000 µg/ml standard to a 100-ml volumetric flask. Dilute with stirring to 100 ml with 10 percent HNO_3. For GFAAS, matrix match the standards. Prepare a 100 ng/ml standard by adding 1 ml of the 10 µg/ml standard to a 100-ml volumetric flask, and dilute to 100 ml with the appropriate matrix solution. Prepare other standards by diluting the 100 ng/ml standards. Use at least five standards to make up the standard curve. Suggested levels are 0, 10, 50, 75, and 100 ng/ml. Prepare quality control samples by making a separate 10 µg/ml standard and diluting until it is in the range of the samples. Prepare any standards containing less than 1 µg/ml of metal on a daily basis. Standards containing greater than 1 µg/ml of metal should be stable for a minimum of 1 to 2 weeks.

4.5.36 Matrix Modifiers.

4.5.36.1 Nickel Nitrate, 1 Percent (V/V). Dissolve 4.956 g of Ni $(NO_3)_2$&διωιδε≧$6H_2O$ or

other nickel compound suitable for preparation of this matrix modifier in approximately 50 ml of water in a 100-ml volumetric flask. Dilute to 100 ml with water.

4.5.36.2 Nickel Nitrate, 0.1 Percent (V/V). Dilute 10 ml of 1 percent nickel nitrate solution to 100 ml with water. Inject an equal amount of sample and this modifier into the graphite furnace during GFAAS analysis for As.

4.5.36.3 Lanthanum. Carefully dissolve 0.5864 g of $La_2 O_3$ in 10 ml of concentrated HNO_3, and dilute the solution by adding it with stirring to approximately 50 ml of water. Dilute to 100 ml with water, and mix well. Inject an equal amount of sample and this modifier into the graphite furnace during GFAAS analysis for Pb.

4.5.37 Whatman 40 and 541 Filter Papers (or equivalent). For filtration of digested samples.

5. Procedure

5.1 Sampling. The complexity of this method is such that, to obtain reliable results, both testers and analysts must be trained and experienced with the test procedures, including source sampling; reagent preparation and handling; sample handling; safety equipment and procedures; analytical calculations; reporting; and the specific procedural descriptions throughout this method.

5.1.1 Pretest Preparation. Follow the same general procedure given in Method 5, Section 4.1.1, except that, unless particulate emissions are to be determined, the filter need not be desiccated or weighed. First, rinse all sampling train glassware with hot tap water and then wash in hot soapy water. Next, rinse glassware three times with tap water, followed by three additional rinses with water. Then soak all glassware in a 10 percent (V/V) nitric acid solution for a minimum of 4 hours, rinse three times with water, rinse a final time with acetone, and allow to air dry. Cover all glassware openings where contamination can occur until the sampling train is assembled for sampling.

5.1.2 Preliminary Determinations. Same as Method 5, Section 4.1.2.

5.1.3 Preparation of Sampling Train.

5.1.3.1 Set up the sampling train as shown in Figure 29–1. Follow the same general procedures given in Method 5, Section 4.1.3, except place 100 ml of the HNO_3/H_2O_2 solution (Section 4.3.1. of this method) in each of the second and third impingers as shown in Figure 29–1. Placee 100 ml of the acidic $KMnO_4$ absorbing solution (Section 4.3.2 of this method) in each of the fifth and sixth impingers as shown in Figure 29–1, and transfer approximately 200 to 300 g of pre-weighed silica gel from its container to the last impinger. Alternatively, the silica gel may be weighed directly in the impinger just prior to final train assembly.

5.1.3.2 Based on the specific source sampling conditions, the use of an empty first impinger can be eliminated if the moisture to be collected in the impingers will be less than approximately 100 ml.

5.1.3.3 If Hg analysis will not be performed, the fourth, fifth, and sixth impingers as shown in Figure 29–1 are not required.

5.1.3.4 To insure leak-free sampling train connections and to prevent possible sample contamination problems, use Teflon tape or other non-contaminating material instead of silicone grease.

Precaution: Exercise extreme care to prevent contamination within the train. Prevent the acidic $KMnO_4$ from contacting any glassware that contains sample material to be analyzed for Mn. Prevent acidic H_2O_2 from mixing with the acidic $KMnO_4$.

5.1.4 Leak-Check Procedures. Follow the leak-check procedures given in Method 5, Section 4.1.4.1 (Pretest Leak-Check), Section 4.1.4.2 (Leak-Checks During the Sample Run), and Section 4.1.4.3 (Post-Test Leak-Checks).

5.1.5 Sampling Train Operation. Follow the procedures given in Method 5, Section 4.1.5. When sampling for Hg, use a procedure analagous to that described in Section 7.1.1 of Method 101A, 40 CFR Part 61, Appendix B, if necessary to maintain the desired color in the last acidified permanganate impinger. For each run, record the data required on a data sheet such as the one shown in Figure 5–2 of Method 5.

5.1.6 Calculation of Percent Isokinetic. Same as Method 5, Section 4.1.6.

5.2 Sample Recovery.

5.2.1 Begin cleanup procedures as soon as the probe is removed from the stack at the end of a sampling period. The probe should be allowed to cool prior to sample recovery. When it can be safely handled, wipe off all external particulate matter near the tip of the probe nozzle and place a rinsed, non-contaminating cap over the probe nozzle to prevent losing or gaining particulate matter. Do not cap the probe tip tightly while the sampling train is cooling; a vacuum can form in the filter holder with the undesired result of drawing liquid from the impingers onto the filter.

5.2.2 Before moving the sampling train to the cleanup site, remove the probe from the sampling train and cap the open outlet. Be careful not to lose any condensate that might be present. Cap the filter inlet where the probe was fastened. Remove the umbilical cord from the last impinger and cap the impinger. Cap the filter holder outlet and impinger inlet. Use non-contaminating caps, whether ground-glass stoppers, plastic caps, serum caps, or Teflon tape to close these openings.

5.2.3 Alternatively, the following procedure may be used to disassemble the train before the probe and filter holder/oven are completely cooled: Initially disconnect the filter holder outlet/impinger inlet and loosely cap the open ends. Then disconnect the probe from the filter holder or cyclone inlet and loosely cap the open ends. Cap the probe tip and remove the umbilical cord as previously described.

5.2.4 Transfer the probe and filter-impinger assembly to a cleanup area that is clean and protected from the wind and other potential causes of contamination or loss of sample. Inspect the train before and during disassembly and note any abnormal conditions. Take special precautions to assure that all the items necessary for recovery do not contaminate the samples. The sample is recovered and treated as follows (see schematic in Figures 29–2a and 29–2b):

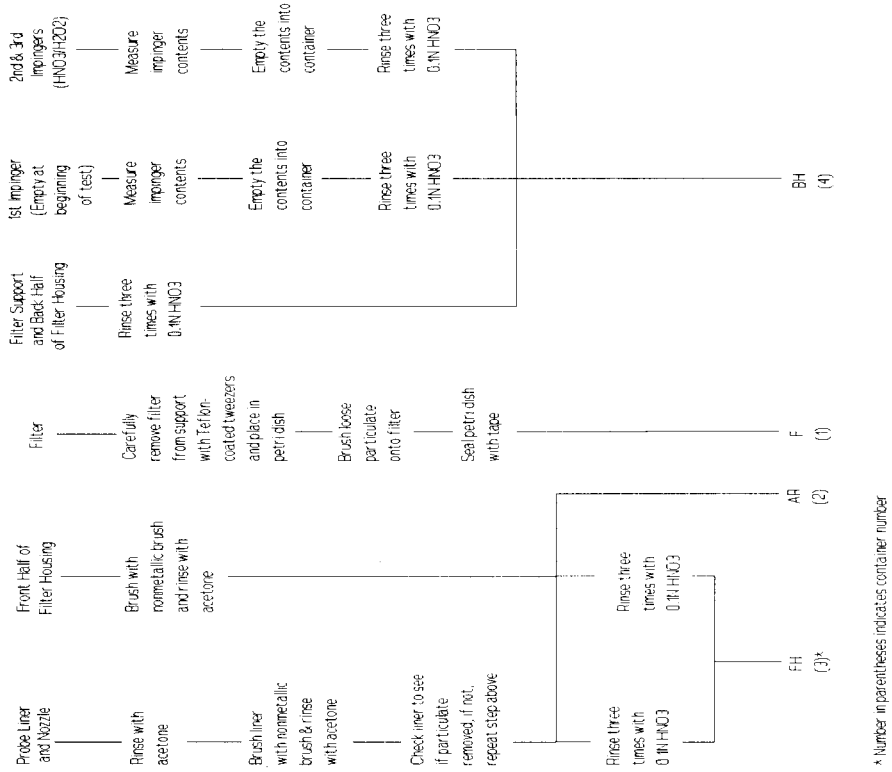

Figure 29-2a. Sample recovery scheme.

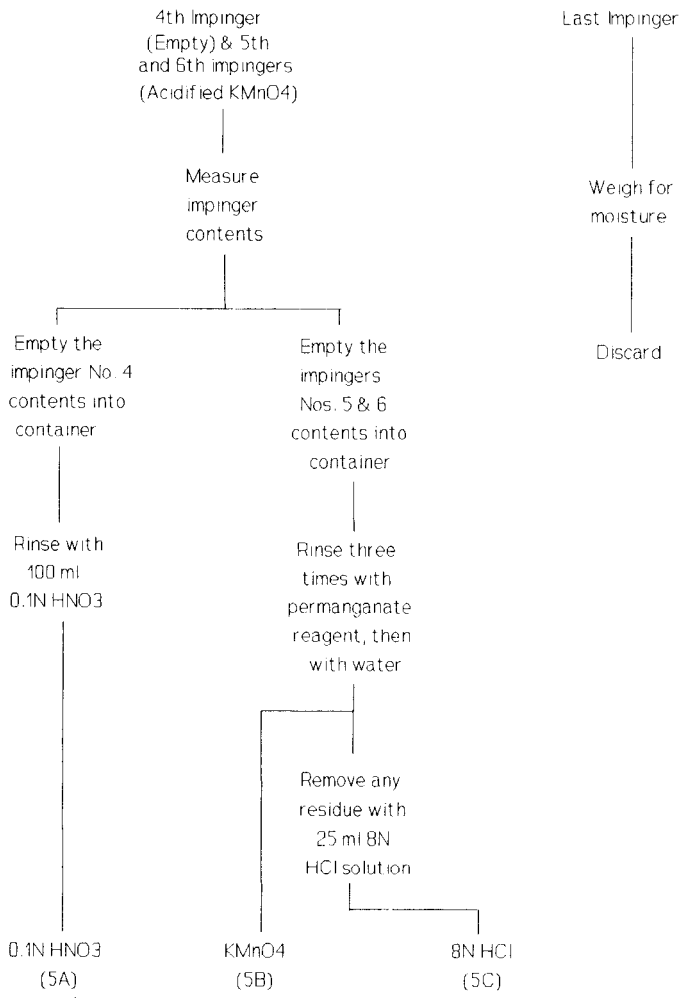

Figure 29-2b. Sample recovery scheme.

5.2.5 Container No. 1 (Sample Filter). Carefully remove the filter from the filter holder and place it in its labeled petri dish container. To handle the filter, use either acid-washed polypropylene or Teflon coated tweezers or clean, disposable surgical gloves rinsed with water and dried. If it is necessary

to fold the filter, make certain the particulate cake is inside the fold. Carefully transfer the filter and any particulate matter or filter fibers that adhere to the filter holder gasket to the petri dish by using a dry (acid-cleaned) nylon bristle brush. Do not use any metal-containing materials when recovering this train. Seal the labeled petri dish.

5.2.6 Container No. 2. (Acetone Rinse). Perform this procedure only if a determination of particulate emissions is to be made. Quantitatively recover particulate matter and any condensate from the probe nozzle, probe fitting, probe liner, and front half of the filter holder by washing these components with a total of 100 ml of acetone, while simultaneously taking great care to see that no dust on the outside of the probe or other surfaces gets in the sample. The use of exactly 100 ml is necessary for the subsequent blank correction procedures. Distilled water may be used instead of acetone when approved by the Administrator and shall be used when specified by the Administrator; in these cases, save a water blank and follow the Administrator's directions on analysis.

5.2.6.1 Carefully remove the probe nozzle, and clean the inside surface by rinsing with acetone from a wash bottle while brushing with a non-metallic brush. Brush until the acetone rinse shows no visible particles, then make a final rinse of the inside surface with acetone.

5.2.6.2 Brush and rinse the sample exposed inside parts of the probe fitting with acetone in a similar way until no visible particles remain. Rinse the probe liner with acetone by tilting and rotating the probe while squirting acetone into its upper end so that all inside surfaces will be wetted with acetone. Allow the acetone to drain from the lower end into the sample container. A funnel may be used to aid in transferring liquid washings to the container. Follow the acetone rinse with a non-metallic probe brush. Hold the probe in an inclined position, squirt acetone into the upper end as the probe brush is being pushed with a twisting action three times through the probe. Hold a sample container underneath the lower end of the probe, and catch any acetone and particulate matter which is brushed through the probe until no visible particulate matter is carried out with the acetone or until none remains in the probe liner on visual inspection. Rinse the brush with acetone, and quantitatively collect these washings in the sample container. After the brushing, make a final acetone rinse of the probe as described above.

5.2.6.3 It is recommended that two people clean the probe to minimize sample losses. Between sampling runs, keep brushes clean and protected from contamination. Clean the inside of the front-half of the filter holder by rubbing the surfaces with a non-metallic brush and rinsing with acetone. Rinse each surface three times or more if needed to remove visible particulate. Make a final rinse of the brush and filter holder. After all acetone washings and particulate matter have been collected in the sample container, tighten the lid so that acetone will not leak out when shipped to the laboratory. Mark the height of the fluid level to determine whether or not leakage occurred during transport. Clearly label the container to identify its contents.

5.2.7 Container No. 3 (Probe Rinse). Keep the probe assembly clean and free from contamination during the probe rinse. Rinse the probe nozzle and fitting, probe liner, and front-half of the filter holder thoroughly with a total of 100 ml of 0.1 N HNO_3, and place the wash into a sample storage container.

(NOTE: The use of a total of exactly 100 ml is necessary for the subsequent blank correction procedures.)

Perform the rinses as applicable and generally as described in Method 12, Section 5.2.2. Record the volume of the rinses. Mark the height of the fluid level on the outside of the storage container and use this mark to determine if leakage occurs during transport. Seal the container, and clearly label the contents. Finally, rinse the nozzle, probe liner, and front-half of the filter holder with water followed by acetone, and discard these rinses.

5.2.8 Container No. 4 (Impingers 1 through 3, Moisture Knockout Impinger, when used, HNO_3/H_2O_2 Impingers Contents and Rinses). Due to the potentially large quantity of liquid involved, the tester may place the impinger solutions from impingers 1 through 3 in more than one container, if necessary. Measure the liquid in the first three impingers to within 0.5 ml using a graduated cylinder. Record the volume. This information is required to calculate the moisture content of the sampled flue gas. Clean each of the first three impingers, the filter support, the back half of the filter housing, and connecting glassware by thoroughly rinsing with 100 ml of 0.1 N HNO_3 using the procedure as applicable in Method 12, Section 5.2.4.

(NOTE: The use of exactly 100 ml of 0.1 N HNO_3 rinse is necessary for the subsequent blank correction procedures. Combine the rinses and impinger solutions, measure and record the final total volume. Mark the height of the fluid level, seal the container, and clearly label the contents.)

5.2.9 Container Nos. 5A (0.1 N HNO_3), 5B ($KMnO_4/H_2SO_4$ absorbing solution), and 5C (8 N HCl rinse and dilution).

5.2.9.1 When sampling for Hg, pour all the liquid from the impinger (normally impinger No. 4) that immediately preceded the two permanganate impingers into a graduated cylinder and measure the volume to within 0.5 ml. This information is required to calculate the moisture content of the sampled

flue gas. Place the liquid in Container No. 5A. Rinse the impinger with exactly 100 ml of 0.1 N HNO_3 and place this rinse in Container No. 5A.

5.2.9.2 Pour all the liquid from the two permanganate impingers into a graduated cylinder and measure the volume to within 0.5 ml. This information is required to calculate the moisture content of the sampled flue gas. Place this acidic $KMnO_4$ solution into Container No. 5B. Using a total of exactly 100 ml of fresh acidified $KMnO_4$ solution for all rinses (approximately 33 ml per rinse), rinse the two permanganate impingers and connecting glassware a minimum of three times. Pour the rinses into Container No. 5B, carefully assuring transfer of all loose precipitated materials from the two impingers. Similarly, using 100 ml total of water, rinse the permanganate impingers and connecting glass a minimum of three times, and pour the rinses into Container 5B, carefully assuring transfer of any loose precipitated material. Mark the height of the fluid level, and clearly label the contents. Read the Precaution: in Section 4.3.2. *NOTE:* Due to the potential reaction of $KMnO_4$ with acid, pressure buildup can occur in the sample storage bottles. Do not fill these bottles completely and take precautions to relieve excess pressure. A No. 70–72 hole drilled in the container cap and Teflon liner has been used successfully.

5.2.9.3 If no visible deposits remain after the water rinse, no further rinse is necessary. However, if deposits remain on the impinger surfaces, wash them with 25 ml of 8 N HCl, and place the wash in a separate sample container labeled No. 5C containing 200 ml of water. First, place 200 ml of water in the container. Then wash the impinger walls and stem with the HCl by turning the impinger on its side and rotating it so that the HC1 contacts all inside surfaces. Use a total of only 25 ml of 8 N HCl for rinsing both permanganate impingers combined. Rinse the first impinger, then pour the actual rinse used for the first impinger into the second impinger for its rinse. Finally, pour the 25 ml of 8 N HCl rinse carefully into the container. Mark the height of the fluid level on the outside of the container to determine if leakage occurs during transport.

5.2.10 Container No. 6 (Silica Gel). Note the color of the indicating silica gel to determine whether it has been completely spent and make a notation of its condition. Transfer the silica gel from its impinger to its original container and seal it. The tester may use a funnel to pour the silica gel and a rubber policeman to remove the silica gel from the impinger. The small amount of particles that might adhere to the impinger wall need not be removed. Do not use water or other liquids to transfer the silica gel since weight gained in the silica gel impinger is used for moisture calculations. Alternatively, if a balance is available in the field, record the weight of the spent silica gel (or silica gel plus impinger) to the nearest 0.5 g.

5.2.11 Container No. 7 (Acetone Blank). If particulate emissions are to be determined, at least once during each field test, place a 100-ml portion of the acetone used in the sample recovery process into a container labeled No. 7. Seal the container.

5.2.12 Container No. 8A (0.1 N HNO_3 Blank). At least once during each field test, place 300 ml of the 0.1 N HNO_3 solution used in the sample recovery process into a container labeled No. 8A. Seal the container.

5.2.13 Container No. 8B (Water Blank). At least once during each field test, place 100 ml of the water used in the sample recovery process into a container labeled No. 8B. Seal the container.

5.2.14 Container No. 9 (5 Percent HNO_3/10 Percent H_2O_2 Blank). At least once during each field test, place 200 ml of the 5 Percent HNO_3/10 Percent H_2O_2 solution used as the nitric acid impinger reagent into a container labeled No. 9. Seal the container.

5.2.15 Container No. 10 (Acidified $KMnO_4$ Blank). At least once during each field test, place 100 ml of the acidified $KMnO_4$ solution used as the impinger solution and in the sample recovery process into a container labeled No. 10. Prepare the container as described in Section 5.2.9.2. Read the *Precaution:* in Section 4.3.2. and read the NOTE in Section 5.2.9.2.

5.2.16 Container No. 11 (8 N HCl Blank). At least once during each field test, place 200 ml of water into a sample container labeled No. 11. Then carefully add with stirring 25 ml of 8 N HCl. Mix well and seal the container.

5.2.17 Container No. 12 (Sample Filter Blank). Once during each field test, place into a petri dish labeled No. 12 three unused blank filters from the same lot as the sampling filters. Seal the petri dish.

5.3 *Sample Preparation.* Note the level of the liquid in each of the containers and determine if any sample was lost during shipment. If a noticeable amount of leakage has occurred, either void the sample or use methods, subject to the approval of the Administrator, to correct the final results. A diagram illustrating sample preparation and analysis procedures for each of the sample train components is shown in Figure 29–3.

5.3.1 *Container No. 1 (Sample Filter).*

5.3.1.1 If particulate emissions are being determined, first desiccate the filter and filter catch without added heat (do not heat the filters to speed the drying) and weigh to a constant weight as described in Section 4.3 of Method 5.

5.3.1.2 Following this procedure, or initially, if particulate emissions are not being determined in addition to metals analysis, divide the filter with its filter catch into portions containing approximately 0.5 g

each. Place the pieces in the analyst's choice of either individual microwave pressure relief vessels or Parr[R] Bombs. Add 6 ml of concentrated HNO_3 and 4 ml of concentrated HF to each vessel. For microwave heating, microwave the samples for approximately 12 to 15 minutes total heating time as follows: heat for 2 to 3 minutes, then turn off the microwave for 2 to 3 minutes, then heat for 2 to 3 minutes, etc., continue this alternation until the 12 to 15 minutes total heating time are completed (this procedure should comprise approximately 24 to 30 minutes at 600 watts). Microwave heating times are approximate and are dependent upon the number of samples being digested simultaneously. Sufficient heating is evidenced by sorbent reflux within the vessel. For conventional heating, heat the Parr[R] Bombs at 140 °C (285 °F) for 6 hours. Then cool the samples to room temperature, and combine with the acid digested probe rinse as required in Section 5.3.3.

5.3.1.3 If the sampling train includes an optional glass cyclone in front of the filter, prepare and digest the cyclone catch by the procedures described in section 5.3.1.2 and then combine the digestate with the digested filter sample.

5.3.2 Container No. 2 (Acetone Rinse). Note the level of liquid in the container and confirm on the analysis sheet whether or not leakage occurred during transport. If a noticeable amount of leakage has occurred, either void the sample or use methods, subject to the approval of the Administrator, to correct the final results. Measure the liquid in this container either volumetrically within 1 ml or gravimetrically within 0.5 g. Transfer the contents to an acid-cleaned, tared 250-ml beaker and evaporate to dryness at ambient temperature and pressure. If particulate emissions are being determined, desiccate for 24 hours without added heat, weigh to a constant weight according to the procedures described in Section 4.3 of Method 5, and report the results to the nearest 0.1 mg. Redissolve the residue with 10 ml of concentrated HNO_3.

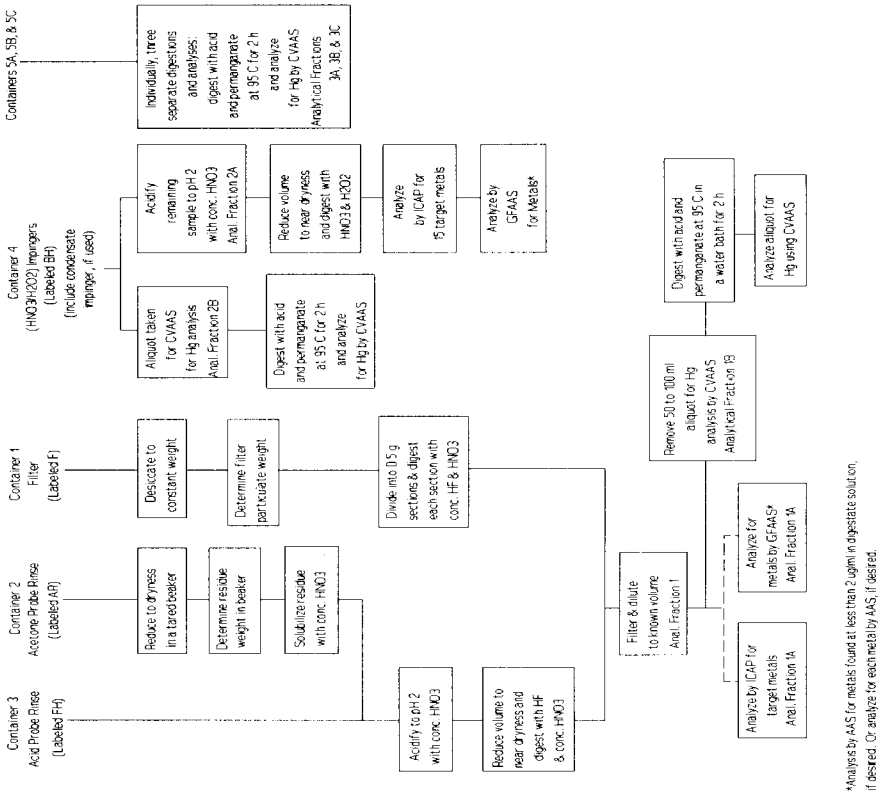

Figure 29-3. Sample preparation and analysis scheme.

Quantitatively combine the resultant sample, including all liquid and any particulate matter, with Container No. 3 before beginning Section 5.3.3.

5.3.3 Container No. 3 (Probe Rinse). Verify that the pH of this sample is 2 or lower. If it is not, acidify the sample by careful addition with stirring of concentrated HNO_3 to pH 2.

Use water to rinse the sample into a beaker, and cover the beaker with a ribbed watch glass. Reduce the sample volume to approximately 20 ml by heating on a hot plate at a temperature just below boiling. Digest the sample in microwave vessels or Parr[R] Bombs by quantitatively transferring the sample to the vessel or bomb, carefully adding the 6 ml of concentrated HNO_3, 4 ml of concentrated HF, and then continuing to follow the procedures described in Section 5.3.1.2. Then combine the resultant sample directly with the acid digested portions of the filter prepared previously in Section 5.3.1.2. The resultant combined sample is referred to as *''Sample Fraction 1''*. Filter the combined sample using Whatman 541 filter paper. Dilute to 300 ml (or the appropriate volume for the expected metals concentration) with water. This diluted sample is *''Analytical Fraction 1''*. Measure and record the volume of Analytical Fraction 1 to within 0.1 ml. Quantitatively remove a 50-ml aliquot and label as *''Analytical Fraction 1B''*. Label the remaining 250-ml portion as *''Analytical Fraction 1A''*. Analytical Fraction 1A is used for ICAP or AAS analysis for all desired metals except Hg. Analytical Fraction 1B is used for the determination of front-half Hg.

5.3.4 Container No. 4 (Impingers 1–3). Measure and record the total volume of this sample to within 0.5 ml and label it *''Sample Fraction 2''*. Remove a 75- to 100-ml aliquot for Hg analysis and label the aliquot *''Analytical Fraction 2B''*. Label the remaining portion of Container No. 4 as *''Sample Fraction 2A''*. Sample Fraction 2A defines the volume of Analytical Fraction 2A *prior* to digestion. All of Sample Fraction 2A is digested to produce *''Analytical Fraction 2A''*. Analytical Fraction 2A defines the volume of Sample Fraction 2A *after* its digestion and the volume of Analytical Fraction 2A is normally 150 ml. Analytical Fraction 2A is analyzed for all metals except Hg. Verify that the pH of Sample Fraction 2A is 2 or lower. If necessary, use concentrated HNO_3 by careful addition and stirring to lower Sample Fraction 2A to pH 2. Use water to rinse Sample Fraction 2A into a beaker and then cover the beaker with a ribbed watch glass. Reduce Sample Fraction 2A to approximately 20 ml by heating on a hot plate at a temperature just below boiling. Then follow either of the digestion procedures described in Sections 5.3.4.1 or 5.3.4.2.

5.3.4.1 Conventional Digestion Procedure. Add 30 ml of 50 percent HNO_3, and heat for 30 minutes on a hot plate to just below boiling. Add 10 ml of 3 percent H_2O_2 and heat for 10 more minutes. Add 50 ml of hot water, and heat the sample for an additional 20 minutes. Cool, filter the sample, and dilute to 150 ml (or the appropriate volume for the expected metals concentrations) with water. This dilution produces Analytical Fraction 2A. Measure and record the volume to within 0.1 ml.

5.3.4.2 Microwave Digestion Procedure. Add 10 ml of 50 percent HNO_3 and heat for 6 minutes total *heating* time in alternations of 1 to 2 minutes at 600 Watts followed by 1 to 2 minutes with no power, etc., similar to the procedure described in Section 5.3.1. Allow the sample to cool. Add 10 ml of 3 percent H_2O_2 and heat for 2 more minutes. Add 50 ml of hot water, and heat for an additional 5 minutes. Cool, filter the sample, and dilute to 150 ml (or the appropriate volume for the expected metals concentrations) with water. This dilution produces Analytical Fraction 2A. Measure and record the volume to within 0.1 ml.

(NOTE: All microwave heating times given are approximate and are dependent upon the number of samples being digested at a time. Heating times as given above have been found acceptable for simultaneous digestion of up to 12 individual samples. Sufficient heating is evidenced by solvent reflux within the vessel.)

5.3.5 Container No. 5A (Impinger 4), Container Nos. 5B and 5C (Impingers 5 and 6). Keep the samples in Containers Nos. 5A, 5B, and 5C separate from each other. Measure and record the volume of 5A to within 0.5 ml. Label the contents of Container No. 5A to be Analytical Fraction 3A. To remove any brown MnO_2 precipitate from the contents of Container No. 5B, filter its contents through Whatman 40 filter paper into a 500 ml volumetric flask and dilute to volume with water. Save the filter for digestion of the brown MnO_2 precipitate. Label the 500 ml filtrate from Container No. 5B to be Analytical Fraction 3B. Analyze Analytical Fraction 3B for Hg within 48 hours of the filtration step. Place the saved filter, which was used to remove the brown MnO_2 precipitate, into an appropriately sized *vented* container, which will allow release of any gases including chlorine formed when the filter is digested. In a laboratory hood which will remove any gas produced by the digestion of the MnO_2, add 25 ml of 8 N HCl to the filter and allow to digest for a minimum of 24 hours at room temperature. Filter the contents of Container No. 5C through a Whatman 40 filter into a 500-ml volumetric flask. Then filter the result of the digestion of the brown MnO_2 from Container No. 5B through a Whatman 40 filter into the same 500-ml volumetric flask, and dilute and mix well to volume with water. Discard the Whatman 40 filter. Mark this combined 500-ml dilute HCl solution as Analytical Fraction 3C.

5.3.6 Container No. 6 (Silica Gel). Weigh the spent silica gel (or silica gel plus impinger) to the nearest 0.5 g using a balance.

5.4 Sample Analysis. For each sampling train sample run, seven individual analytical samples are generated; two for all desired

metals except Hg, and five for Hg. A schematic identifying each sample container and the prescribed analytical preparation and analysis scheme is shown in Figure 29–3. The first two analytical samples, labeled Analytical Fractions 1A and 1B, consist of the digested samples from the front-half of the train. Analytical Fraction 1A is for ICAP, ICP–MS or AAS analysis as described in Sections 5.4.1 and 5.4.2, respectively. Analytical Fraction 1B is for front-half Hg analysis as described in Section 5.4.3. The contents of the back-half of the train are used to prepare the third through seventh analytical samples. The third and fourth analytical samples, labeled Analytical Fractions 2A and 2B, contain the samples from the moisture removal impinger No. 1, if used, and HNO_3 H_2O_2 impingers Nos. 2 and 3. Analytical Fraction 2A is for ICAP, ICP–MS or AAS analysis for target metals, except Hg. Analytical Fraction 2B is for analysis for Hg. The fifth through seventh analytical samples, labeled Analytical Fractions 3A, 3B, and 3C, consist of the impinger contents and rinses from the empty impinger No. 4 and the $H_2SO_4/KMnO_4$ Impingers Nos. 5 and 6. These analytical samples are for analysis for Hg as described in Section 5.4.3. The total back-half Hg catch is determined from the sum of Analytical Fractions 2B, 3A, 3B, and 3C. Analytical Fractions 1A and 2A can be combined proportionally prior to analysis.

5.4.1 ICAP and ICP–MS Analysis. Analyze Analytical Fractions 1A and 2A by ICAP using Method 6010 or Method 200.7 (40 CFR part 136, appendix C). Calibrate the ICAP, and set up an analysis program as described in Method 6010 or Method 200.7. Follow the quality control procedures described in Section 7.3.1. Recommended wavelengths for analysis are as follows:

Element	Wavelength (nm)
Aluminum	308.215
Antimony	206.833
Arsenic	193.696
Barium	455.403
Beryllium	313.042
Cadmium	226.502
Chromium	267.716
Cobalt	228.616
Copper	324.754
Iron	259.940
Lead	220.353
Manganese	257.610
Nickel	231.604
Phosphorous	214.914
Selenium	196.026
Silver	328.068
Thallium	190.864
Zinc	213.856

These wavelengths represent the best combination of specificity and potential detection limit. Other wavelengths may be substituted if they can provide the needed specificity and detection limit, and are treated with the same corrective techniques for spectral interference. Initially, analyze all samples for the target metals (except Hg) plus Fe and Al. If Fe and Al are present, the sample might have to be diluted so that each of these elements is at a concentration of less than 50 ppm so as to reduce their spectral interferences on As, Cd, Cr, and Pb. Perform ICP–MS analysis by following Method 6020 in EPA Publication SW–846 Third Edition (November 1986) including updates I, II, IIA, and IIB, as incorporated by reference in § 60.17(i).

(NOTE: When analyzing samples in a HF matrix, an alumina torch should be used; since all front-half samples will contain HF, use an alumina torch.)

5.4.2. AAS by Direct Aspiration and/or GFAAS. If analysis of metals in Analytical Fractions 1A and 2A by using GFAAS or direct aspiration AAS is needed, use Table 29–2 to determine which techniques and procedures to apply for each target metal. Use Table 29–2, if necessary, to determine techniques for minimization of interferences. Calibrate the instrument according to Section 6.3 and follow the quality control procedures specified in Section 7.3.2.

TABLE 29–2.—APPLICABLE TECHNIQUES, METHODS AND MINIMIZATION OF INTERFERENCE FOR AAS ANALYSIS

Metal	Technique	SW–846 [1] method No.	Wavelength (nm)	Interferences	
				Cause	Minimization
Fe	Aspiration	7380	248.3	Contamination	Great care taken to avoid contamination.
Pb	Aspiration	7420	283.3	217.0 nm alternate	Background correction required.
Pb	Furnace	7421	283.3	Poor recoveries	Matrix modifier, add 10 ul of phosphorus acid to 1 ml of prepared sample in sampler cup.
Mn	Aspiration	7460	279.5	403.1 nm alternate	Background correction required.

TABLE 29–2.—APPLICABLE TECHNIQUES, METHODS AND MINIMIZATION OF INTERFERENCE FOR AAS ANALYSIS—Continued

Metal	Technique	SW–846[1] method No.	Wavelength (nm)	Interferences	
				Cause	Minimization
Ni	Aspiration	7520	232.0	352.4 nm alternate Fe, Co, and Cr.	Background correction required. Matrix matching or nitrous-oxide/acetylene flame.
				Nonlinear response	sample dilution or use 352.3 nm line.
Se	Furnace	7740	196.0	Volatility	Spike samples and reference materials and add nickel nitrate to minimize volatilization.
				Adsorption & scatter	Background correction is required and Zeeman background correction can be useful.
Ag	Aspiration	7760	328.1	Adsorption & Scatter AgCl insoluble.	Background correction is required. Avoid Hydrochloric acid unless silver is in solution as a chloride complex Sample and standards monitored for aspiration rate.
Tl	Aspiration	7840	276.8		Background correction is required. Hydrochloric acid should not be used.
Tl	Furnace	7841	276.8	Hydrochloric acid or chloride.	Background correction is required. Verify that losses are not occurring for volatization by spiked samples or standard addition; Palladium is a suitable matrix modifier.
Zn	Aspiration	7950	213.9	High Si, Cu, & P Contamination.	Strontium removes Cu and phosphate, Great care taken to avoid contamination.
Sb	Aspiration	7040	217.6	1000 mg/ml Pb Ni, Cu, or acid.	Use secondary wavelengths of 231.1.nm; match sample & standards acid concentration or use nitrous oxidefacetylene flame.
Sb	Furnace	7041	217.6	High Pb	Secondary Wavelength or Zeeman correction.
As	Furnace	7060	193.7	Arsenic volatilization Aluminum	Spiked samples and add nickel nitrate solution to digestates prior to analysis. Use Zeeman background correction.
Ba	Aspiration 7080	7080	553.6	Calcium Barium ionization	High hollow cathode current and narrow band set. 2 ml of KCl per 100 ml of sample.
Be	Aspiration	7090	234.9	500 ppm Al High Mg and Si.	Add 0.1% fluoride. Use method of standard additions.
Be	Furnace	7091	234.9	Be in optical path	Optimize parameters to minimize effects.
Cd	Aspiration	7130	228.8	Absorption and light scattering.	Background correction is required.
Cd	Furnace	7131	228.8	As above Excess Chloride Pipet tips	As above. Ammonium phosphate used as a matrix modifier. Use cadmiun-free tips.

TABLE 29–2.—APPLICABLE TECHNIQUES, METHODS AND MINIMIZATION OF INTERFERENCE FOR AAS ANALYSIS—Continued

Metal	Technique	SW–846 [1] method No.	Wavelength (nm)	Interferences	
				Cause	Minimization
Cr	Aspiration	7190	357.9	Akali metal	KCl ionization suppressant in samples and standards—Consult mfgs literature.
Co	Furnace	7201	240.7	Excess chloride	Use Method of Standard Additions.
Cr	Furnace	7191	357.9	200 mg/L Ca and P	All calcium nitrate for a known constant effect and to eliminate effect of phosphate.
Cu	Aspiration	7210	324.7	Absorption & scatter	Consult manufacturer's manual.

[1] Refer to EPA publication SW–846 Third Edition (November 1986) including updates I, II, IIA, and IIB, as incorporated by reference in § 60.17(i).

5.4.3 CVAAS Hg analysis. Analyze Analytical Fractions 1B, 2B, 3A, 3B, and 3C separately for Hg using CVAAS following the method outlined in Method 7470 in EPA Publication SW–846 Third Edition (November 1986) including updates I, II, IIA and IIB, as incorporated by reference in § 60.17(i) or in *Standard Methods for the Examination of Water and Wastewater,* 16th Edition, (1985), Method 303F, as incorporated by reference in § 60.17, or, optionally using *NOTE No. 2* in this section. Set up the calibration curve (zero to 1000 ng) as described in Method 7470 or similar to Method 303F using 300-ml BOD bottles instead of Erlenmeyers. Perform the following for each Hg analysis. From each original sample, select and record an aliquot in the size range from 1 ml to 10 ml. If no prior knowledge of the expected amount of Hg in the sample exists, a 5 ml aliquot is suggested for the first dilution to 100 ml (see *NOTE No. 1* in this Section). The total amount of Hg in the aliquot shall be less than 1 μ g and within the range (zero to 1000 ng) of the calibration curve. Place the sample aliquot into a separate 300-ml BOD bottle, and add enough water to make a total volume of 100 ml. Next add to it sequentially the sample digestion solutions and perform the sample preparation described in the procedures of Method 7470 or Method 303F. (See *NOTE No. 2* in this Section). If the maximum readings are off-scale (because Hg in the aliquot exceeded the calibration range; including the situation where only a 1-ml aliquot of the original sample was digested), then dilute the original sample (or a portion of it) with 0.15 percent HNO_3 (1.5 ml concentrated HNO_3 per liter aqueous solution) so that when a 1- to 10-ml aliquot of the ''0.15 HNO_3 percent dilution of the original sample'' is digested and analyzed by the procedures described above, it will yield an analysis within the range of the calibration curve.

NOTE NO. 1 TO SECTION 5.4.3. When Hg levels in the sample fractions are below the in-stack detection limit given in Table 29–1, select a 10 ml aliquot for digestion and analysis as described.

NOTE NO. 2 TO SECTION 5.4.3. Optionally, Hg can be analyzed by using the CVAAS analytical procedures given by some instrument manufacturer's directions. These include calibration and quality control procedures for the Leeman Model PS200, the Perkin Elmer FIAS systems, and similar models, if available, of other instrument manufacturers. For digestion and analyses by these instruments, perform the following two steps:

(1) Digest the sample aliquot through the addition of the aqueous hydroxylamine hydrochloride/sodium chloride solution the same as described in this Section 5.4.3.: (*The Leeman, Perkin Elmer, and similar instruments described in this note add automatically the necessary stannous chloride solution during the automated analysis of Hg.)* and

(2) Upon completion of the digestion described in paragraph (1), of this note, analyze the sample according to the instrument manufacturer's directions. This approach allows multiple (including duplicate) automated analyses of a digested sample aliquot.

6. Calibration

Maintain a laboratory log of all calibrations.

6.1 Sampling Train Calibration. Calibrate the sampling train components according to the indicated sections of Method 5: Probe Nozzle (Section 5.1); Pitot Tube (Section 5.2); Metering System (Section 5.3); Probe Heater (Section 5.4); Temperature Gauges (Section 5.5); Leake-Check of the Metering System (Section 5.6); and Barometer (Section 5.7).

6.2 Industively Coupled Argon Plasma Spectrometer Calibration. Prepare standards

as outlined in Section 4.5. Profile and calibrate the instrument according to the manufacturer's recommended procedures using those standards. Check the calibration once per hour. If the instrument does not reproduce the standard concentrations within 10 percent, perform the complete calibration procedures. Perform ICP–MS analysis by following Method 6020 in EPA Publication SW–846 Third Edition (November 1986) including updates I, II, IIA and IIB, as incorporated by reference in §60.17(i).

6.3 Atomic Absorption Spectrometer—Direct Aspiration AAS, GFAAS, and CVAAS analyses. Prepare the standards as outlined in Section 4.5 and use them to calibrate the spectrometer. Calibration procedures are also outlined in the EPA methods referred to in Table 29–2 and in Method 7470 in EPA Publication SW–846 Third Edition (November 1986) including updates I, II, IIA and IIB, as incorporated by reference in §60.17(i) or in *Standard Methods for the Examination of Water and Wastewater,* 16th Edition, (1985), Method 303F (for Hg) as incorporated by reference in §60.17. Run each standard curve in duplicate and use the mean values to calculate the calibration line. Recalibrate the instrument approximately once every 10 to 12 samples.

7. Quality Control

7.1 Field Reagent Blanks, if analyzed. Perform the digestion and analysis of the blanks in Container Nos. 7 through 12 that were produced in Sections 5.2.11 through 5.2.17, respectively. For Hg field reagent blanks, use a 10 ml aliquot for digestion and analysis.

7.1.1 Digest and analyze one of the filters from Container No. 12 per Section 5.3.1, 100 ml from Container No. 7 per Section 5.3.2, and 100 ml from Container No. 8A per Section 5.3.3. This step produces blanks for Analytical Fractions 1A and 1B.

7.1.2 Combine 100 ml of Container No. 8A with 200 ml from Container No. 9, and digest and analyze the resultant volume per Section 5.3.4. This step produces blanks for Analytical Fractions 2A and 2B.

7.1.3 Digest and analyze a 100-ml portion of Container No. 8A to produce a blank for Analytical Fraction 3A.

7.1.4 Combine 100 ml from Container No. 10 with 33 ml from Container No. 8B to produce a blank for Analytical Fraction 3B. Filter the resultant 133 ml as described for Container No. 5B in Section 5.3.5, except do not dilute the 133ml. Analyze this blank for Hg within 48 hrs. of the filtration step, and use 400 ml as the blank volume when calculating the blank mass value. Use the actual volumes of the other analytical blanks when calculating their mass values.

7.1.5 Digest the filter that was used to remove any brown MnO_2 precipitate from the blank for Analytical Fraction 3B by the same procedure as described in Section 5.3.5 for the similar sample filter. Filter the digestate and the contents of Container No. 11 through Whatman 40 paper into a 500-ml volumetric flask, and dilute to volume with water. These steps produce a blank for Analytical Fraction 3C.

7.1.6 Analyze the blanks for Analytical Fraction Blanks 1A and 2A per Section 5.4.1 and/or Section 5.4.2. Analyze the blanks for Analytical Fractions 1B, 2B, 3A, 3B, and 3C per Section 5.4.3. Analysis of the blank for Analytical Fraction 1A produces the front-half reagent blank correction values for the desired metals except for Hg; Analysis of the blank for Analytical Fraction 1B produces the front-half reagent blank correction value for Hg. Analysis of the blank for Analytical Fraction 2A produces the back-half reagent blank correction values for all of the desired metals except for Hg, while separate analyses of the blanks for Analytical Fractions 2B, 3A, 3B, and 3C produce the back-half reagent blank correction value for Hg.

7.2 Quality Control Samples. Analyze the following quality control samples.

7.2.1 ICAP and ICP–MS Analysis. Follow the respective quality control descriptions in Section 8 of Methods 6010 and 6020 of EPA Publication SW–846 Third Edition (November 1986) including updates I, II, IIA and IIB, as incorporated by reference in §60.17(i). For the purposes of a source test that consists of three sample runs, modify those requirements to include the following: two instrument check standard runs, two calibration blank runs, one interference check sample at the beginning of the analysis (analyze by Method of Standard Additions unless within 25 percent), one quality control sample to check the accuracy of the calibration standards (required to be within 25 percent of calibration), and one duplicate analysis (required to be within 20 percent of average or repeat all analyses).

7.2.2. Direct Aspiration AAS and/or GFAAS Analysis for Sb, As, Ba, Be, Cd, Cu, Cr, Co, Pb, Ni, Mn, Hg, P, Se, Ag, Tl, and Zn. Analyze all samples in duplicate. Perform a matrix spike on at least one front-half sample and one back-half sample, or one combined sample. If recoveries of less than 75 percent or greater than 125 percent are obtained for the matrix spike, analyze each sample by the Method of Standard Additions. Analyze a quality control sample to check the accuracy of the calibration standards. If the results are not within 20 percent, repeat the calibration.

7.2.3 CVAAS Analysis for Hg. Analyze all samples in duplicate. Analyze a quality control sample to check the accuracy of the calibration standards (if not within 15 percent, repeat calibration). Perform a matrix spike on one sample (if not within 25 percent, analyze all samples by the Method of Standard Additions). Additional information on quality control can be obtained from Method

7470 of EPA Publication SW–846 Third Edition (November 1986) including updates I, II, IIA and IIB, as incorporated by reference in §60.17(i) or in *Standard Methods for the Examination of Water and Wastewater,* 16th Edition, (1985), Method 303F as incorporated by reference in §60.17.

8. Calculations

8.1 Dry Gas Volume. Using the data from this test, calculate $V_{m(std)}$, the dry gas sample volume at standard conditions as outlined in Section 6.3 of Method 5.

8.2 Volume of Water Vapor and Moisture Content. Using the total volume of condensate collected during the source sampling, calculate the volume of water vapor $V_{w(std)}$ and the moisture content B_{ws} of the stack gas. Use Equations 5–2 and 5–3 of Method 5.

8.3 Stack Gas Velocity. Using the data from this test and Equation 2–9 of Method 2, calculate the average stack gas velocity.

8.4 Metals (Except Hg) in Source Sample.

8.4.1 Analytical Fraction 1A, Front-Half, Metals (except Hg). Calculate separately the amount of each metal collected in Sample Fraction 1 of the sampling train using the following equation:

$$M_{fh}=C_{a1}\ F_d\ V_{soln,1} \qquad \text{Eq. 29–1}$$

where:

M_{fh}=Total mass of each metal (except Hg) collected in the front half of the sampling train (Sample Fraction 1), µg.

C_{a1}=Concentration of metal in Analytical Fraction 1A as read from the standard curve, µg/ml.

F_d=Dilution factor (F_d = the inverse of the fractional portion of the concentrated sample in the solution actually used in the instrument to produce the reading C_{a1}. For example, if a 2 ml aliquot of Analytical Fraction 1A is diluted to 10 ml to place it in the calibration range, F_d = 5).

$V_{soln,1}$=Total volume of digested sample solution (Analytical Fraction 1), ml.

8.4.1.1 If Analytical Fractions 1A and 2A are combined, use proportional aliquots. Then make appropriate changes in Equations 29–1 through 29–3 to reflect this approach.

8.4.2 Analytical Fraction 2A, Back-Half, Metals (except Hg). Calculate separately the amount of each metal collected in Fraction 2 of the sampling train using the following equation.

$$M_{bh}=C_{a2}\ F_a\ V_a \qquad \text{Eq. 29–2}$$

where:

M_{bh}=Total mass of each metal (except Hg) collected in the back-half of the sampling train (Sample Fraction 2), µg.

C_{a2}=Concentration of metal in Analytical Fraction 2A as read from the standard curve, (µg/ml).

F_a=Aliquot factor, volume of Sample Fraction 2 divided by volume of Sample Fraction 2A (*see Section 5.3.4.*)

V_a=Total volume of digested sample solution (Analytical Fraction 2A), ml (see Section 5.3.4.1 or 5.3.4.2, as applicable).

8.4.3 Total Train, Metals (except Hg). Calculate the total amount of each of the quantified metals collected in the sampling train as follows:

$$M_t=(M_{fh} - M_{fhb}) + (M_{bh} - M_{bhb}) \qquad \text{Eq. 29–3}$$

where:

M_t=Total mass of each metal (separately stated for each metal) collected in the sampling train, µg.

M_{fhb}=Blank correction value for mass of metal detected in front-half field reagent blank, µg.

M_{bhb}=Blank correction value for mass of metal detected in back-half field reagent blank, µg.

8.4.3.1 If the measured blank value for the front half (M_{fhb}) is in the range 0.0 to ''A'' µg [where ''A'' µg equals the value determined by multiplying 1.4 µg/in.^{2} times the actual area in in.^{2} of the sample filter], use M_{fhb} to correct the emission sample value (M_{fh}); if M_{fhb} exceeds ''A'' µg, use the greater of I or II:

I. ''A'' µg.

II. the lesser of (a) M_{fhb}, or (b) 5 percent of M_{fh}.

If the measured blank value for the black-half (M_{bhb}) is in the range 0.0 to 1 µg, use M_{bhb} to correct the emission sample value (M_{bh}); if M_{bhb}) exceeds 1 µg, use the greater of I or II:

I. 1 µg.

II. the lesser of (a) M_{bhb} or (b) 5 percent of M_{bh}.

8.5 Hg in Source Sample.

8.5.1 Analytical Fraction 1B; Front-Half Hg. Calculate the amount of Hg collected in the front-half, Sample Fraction 1, of the sampling train by using Equation 29–4:

$$Hg_{fh} = \frac{Q_{fh}}{V_{f1B}}\left(V_{soln,1}\right) \qquad \text{Eq. 29 – 4}$$

where:

Hg_{fh}=Total mass of Hg collected in the front-half of the sampling train (Sample Fraction 1), µg.

Q_{fh}=Quantity of Hg, µg, *TOTAL in the ALIQUOT of Analytical Fraction 1B selected for digestion and analysis.*

8.5.1.1 For example, if a 10 ml aliquot of Analytical Fraction 1B is taken and digested and analyzed (according to Section 5.4.3 and its NOTES Nos. 1 and 2), then calculate and use the total amount of Hg in the 10 ml aliquot for Q_{fh}.

$V_{soln,1}$=Total volume of Analytical Fraction 1, ml.

V_{f1B}=Volume of aliquot of Analytical Fraction 1B analyzed, ml.

8.5.1.2 For example, if a 1 ml aliquot of Analytical Fraction 1B was diluted to 50 ml

with 0.15 percent HNO_3 as described in Section 5.4.3 to bring it into the proper analytical range, and then 1 ml of that 50-ml wa digested according to Section 5.4.3 and analyzed, V_{f1B} would be 0.02 ml.

8.5.2 Analytical Fractions 2B, 3A, 3B, and 3C; Back Half Hg.

8.5.2.1 Calculate the amount of Hg collected in Sample Fraction 2 by using Equation 29–5:

$$Hg_{bh2} = \frac{Q_{bh2}}{V_{f2B}}\left(V_{soln,2}\right) \qquad \text{Eq. } 29-5$$

where:

Hg_{bh2}=Total mass of Hg collected in Sample Fraction 2, µg.

Q_{bh2}=Quantity of Hg, µg, *TOTAL in the ALIQUOT of Analytical Fraction 2B selected for digestion and analysis.*

8.5.2.1.1 For example, if a 10 ml aliquot of Analytical Fraction 2B is taken and digested and analyzed (according to Section 5.4.3 and its NOTES Nos. 1 and 2), then calculate and use the total amount of Hg in the 10 ml aliquot for Q_{bh2}.

$V_{soln,2}$=Total volume of Sample Fraction 2, ml.

V_{f2B}=Volume of Analytical Fraction 2B analyzed, ml.

8.5.2.1.2 For example, if 1 ml of Analytical Fraction 2B was diluted to 10 ml with 0.15 percent HNO_3 as described in Section 5.4.3 to bring it into the proper analytical range, and then 5 ml of that 10-ml was analyzed, V_{f2B} would be 0.5 ml.

8.5.2.2 Calculate each of the back-half Hg values for Analytical Fractions 3A, 3B, and 3C by using Equation 29–6:

$$Hg_{bh3(A,B,C)} = \frac{Q_{bh3(A,B,C)}}{V_{f3(A,B,C)}}\left(V_{soln,3(A,B,C)}\right) \qquad \text{Eq. } 29-6$$

where:

$Hg_{bh3(A,B,C)}$=Total mass of Hg collected separately in Fraction 3A, 3B, or 3C, µg.

$Q_{bh3(A,B,C)}$=Quantity of Hg, µg, *TOTAL, separately, in the ALIQUOT of Analytical Fraction 3A, 3B, and 3C selected for digestion and analysis,* (see previous notes in Sections 8.5.1 and 8.5.2 describing the quantity ''Q'' and calculate similarly).

$V_{f3(A,B,C)}$=Volume, separately, of Analytical Fraction 3A, 3B, or 3C analyzed, ml (see previous notes in Sections 8.5.1 and 8.5.2, describing the quantity ''V'' and calculate similarly).

$V_{soln,3(A,B,C)}$=Total volume, separately, of Analytical Fraction 3A, 3B, or 3C, ml.

8.5.2.3 Calculate the total amount of Hg collected in the back-half of the sampling train by using Equation 29–7:

$$Hg_{bh}=Hg_{bh2}+Hg_{bh3A}+Hg_{bh3B}+Hg_{bh3C} \qquad \text{Eq. } 29-7$$

where:

Hg_{bh}=Total mass of Hg collected in the back-half of the sampling train, µg.

8.5.3 Total Train Hg Catch. Calculate the total amount of Hg collected in the sampling train by using Equation 29–8:

$$Hg_t=(Hg_{fh}-Hg_{fhb})+(Hg_{bh}-Hg_{bhb}) \qquad \text{Eq. } 29-8$$

where:

Hg_t=Total mass of Hg collected in the sampling train, µg.

Hg_{fhb}=Blank correction value for mass of Hg detected in front-half field reagent blank, µg.

Hg_{bhb}=Blank correction value for mass of Hg detected in back-half field reagent blanks, µg.

8.5.4 If the total of the measured blank values ($Hg_{fhb}+Hg_{bhb}$) is in the range of 0.0 to 0.6 µg, then use the total to correct the sample value ($Hg_{fh}+Hg_{bh}$); if it exceeds 0.6 µg, use the greater of I. or II:

I. 0.6 µg.

II. the lesser of (a) ($Hg_{fhb}+Hg_{bhb}$), or (b) 5 percent of the sample value ($Hg_{fh}+Hg_{bh}$).

8.6 Individual Metal Concentrations in Stack Gas. Calculate the concentration of each metal in the stack gas (dry basis, adjusted to standard conditions) by using Equation 29–9:

$$C_s = \frac{K_4 M_t}{V_{m(std)}} \qquad \text{Eq. } 29-9$$

C_s=Concentration of a metal in the stack gas, mg/dscm.

$K_4=10^{-3}$ mg/µg.

M_t=Total mass of that metal collected in the sampling train, µg; (substitute Hg_t for M_t for the Hg calculation).

$V_{m(std)}$=Volume of gas sample as measured by the dry gas meter, corrected to dry standard conditions, dscm.

8.7 Isokinetic Variation and Acceptable Results. Same as Method 5, Sections 6.11 and 6.12, respectively.

9. Bibliography

1. Method 303F in *Standard Methods for the Examination of Water Wastewater*, 16th Edition, 1985. Available from the American Public Health Association, 1015 18th Street NW., Washington, DC 20036.

2. EPA Methods 6010, 6020, 7000, 7041, 7060, 7131, 7421, 7470, 7740, and 7841, *Test Methods for Evaluating Solid Waste: Physical/Chemical Methods.* SW–846, Third Edition, September 1986, with updates I, II, IIA and IIB. Office of Solid Waste and Emergency Response, U.S. Environmental Protection Agency, Washington, DC 20460.

3. EPA Method 200.7, *Code of Federal Regulations*, Title 40, Part 136, Appendix C. July 1, 1987.

4. EPA Methods 1 through 5, *Code of Federal Regulations*, Title 40, Part 60, Appendix A. July 1, 1991.

5. EPA Method 101A, *Code of Federal Regulations*, Title 40, Part 61, Appendix B. July 1, 1991.

[36 FR 24877, Dec. 23, 1971]

EDITORIAL NOTE: For FEDERAL REGISTER citations affecting part 60, appendix A see the List of CFR Sections in the Finding Aids section of this volume.

APPENDIX B TO PART 60—PERFORMANCE SPECIFICATIONS

Performance Specification 1—Specifications and test procedures for opacity continuous emission monitoring systems in stationary sources
Performance Specification 2—Specifications and test procedures for SO_2 and NO_x continuous emission monitoring systems in stationary sources
Performance Specification 3—Specifications and test procedures for O_2 and CO_2 continuous emission monitoring systems in stationary sources
Performance Specification 4—Specifications and test procedures for carbon monoxide continuous emission monitoring systems in stationary sources
Performance Specification 4A—Specifications and test procedures for carbon monoxide continuous emission monitoring systems in stationary sources
Performance Specification 4B—Specifications and Test Procedures for Carbon Monoxide and Oxygen Continuous Monitoring Systems in Stationary Sources
Performance Specification 5—Specifications and test procedures for TRS continuous emission monitoring systems in stationary sources
Performance Specification 6—Specifications and test procedures for continuous emission rate monitoring systems in stationary sources
Performance Specification 7—Specifications and test procedures for hydrogen sulfide continuous emission monitoring systems in stationary sources
Performance Specification 8—Performance Specifications for Volatile Organic Compound Continuous Emission Monitoring Systems in Stationary Sources
Performance Specification 8A—Specifications and Test Procedures for Total Hydrocarbon Continuous Monitoring Systems in Stationary Sources
Performance Specification 9—Specifications and Test Procedures for Gas Chromatographic Countiuous Emission Monitoring Systems in Stationary Sources

PERFORMANCE SPECIFICATION 1—SPECIFICATIONS AND TEST PROCEDURES FOR OPACITY CONTINUOUS EMISSION MONITORING SYSTEMS IN STATIONARY SOURCES

1. *Applicability and Principle*

1.1 Applicability. This specification contains requirements for the design, performance, and installation of instruments for opacity continuous emission monitoring systems (CEMS's) and data computation procedures for evaluating the acceptability of a CEMS. Certain design requirements and test procedures established in this specification may not apply to all instrument designs. In such instances, equivalent design requirements and test procedures may be used with prior approval of the Administrator.

Performance Specification 1 (PS 1) applies to opacity monitors installed after March 30, 1983. Opacity monitors installed before March 30, 1983, are required to comply with the provisions and requirements of PS 1 except for the following:

(a) Section 4. ''Installation Specifications.''

(b) Sections 5.1.4, 5.1.6, 5.1.7, and 5.1.8 of Section 5, ''Design and Performance Specifications.''

(c) Section 6.4 of Section 6 ''Design Specifications Verification Procedure.''

An opacity monitor installed before March 30, 1983, need not be tested to demonstrate compliance with PS 1 unless required by regulatory action other than the promulgation of PS 1. If an existing monitor is replaced with a new monitor, PS 1 shall apply except that the new monitor may be located at the old measurement location regardless of whether the location meets the requirements of Section 4. If a new measurement location is to be determined, the new location shall meet the requirements of Section 4.

1.2 Principle. The opacity of particulate matter in stack emissions is continuously monitored by a measurement system based upon the principle of transmissometry. Light having specific spectral characteristics is projected from a lamp through the effluent in the stack or duct, and the intensity of the projected light is measured by a sensor. The

projected light is attenuated because of absorption and scattered by the particulate matter in the effluent; the percentage of visible light attenuated is defined as the opacity of the emission. Transparent stack emissions that do not attenuate light will have a transmittance of 100 percent or an opacity of zero percent. Opaque stack emissions that attenuate all of the visible light will have a transmittance of zero percent or an opacity of 100 percent.

This specification establishes specific design criteria for the transmissometer system. Any opacity CEMS that is expected to meet this specification is first checked to verify that the design specifications are met. Then, the opacity CEMS is calibrated, installed, and operated for a specified length of time. During this specified time period, the system is evaluated to determine conformance with the established performance specifications.

2. *Definitions*

2.1 Continuous Emission Monitoring System. The total equipment required for the determination of opacity. The system consists of the following major subsystems:

2.1.1 Sample Interface. That portion of CEMS that protects the analyzer from the effects of the stack effluent and aids in keeping the optical surfaces clean.

2.1.2 Analyzer. That portion of the CEMS that senses the pollutant and generates an output that is a function of the opacity.

2.1.3 Data Recorder. That portion of the CEMS that provides a permanent record of the analyzer output in terms of opacity. The data recorder may include automatic data-reduction capabilities.

2.2 Transmissometer. That portion of the CEMS that includes the sample interface and the analyzer.

2.3 Transmittance. The fraction of incident light that is transmitted through an optical medium.

2.4 Opacity. The fraction of incident light that is attenuated by an optical medium. Opacity (Op) and transmittance (Tr) are related by: $Op=1-Tr$.

2.5 Optical Density. A logarithmic measure of the amount of incident light attenuated. Optical density (D) is related to the transmittance and opacity as follows:

$D=-\log_{10} Tr=-\log_{10} (1-Op)$.

2.6 Peak Spectral Response. The wavelength of maximum sensitivity of the transmissometer.

2.7 Mean Spectral Response. The wavelength that is the arithmetic mean value of the wavelength distribution for the effective spectral response curve of the transmissometer.

2.8 Angle of View. The angle that contains all of the radiation detected by the photodetector assembly of the analyzer at a level greater than 2.5 percent of the peak detector response.

2.9 Angle of Projection. The angle that contains all of the radiation projected from the lamp assembly of the analyzer at a level of greater than 2.5 percent of the peak illuminance.

2.10 Span Value. The opacity value at which the CEMS is set to produce the maximum data display output as specified in the applicable subpart.

2.11 Upscale Calibration Value. The opacity value at which a calibration check of the CEMS is performed by simulating an upscale opacity condition as viewed by the receiver.

2.12 Calibration Error. The difference between the opacity values indicated by the CEMS and the known values of a series of calibration attenuators (filters or screens).

2.13 Zero Drift. The difference in the CEMS output readings from the zero calibration value after a stated period of normal continuous operation during which no unscheduled maintenance, repair, or adjustment took place. A calibration value of 10 percent opacity or less may be used in place of the zero calibration value.

2.14 Calibration Drift. The difference in the CEMS output readings from the upscale calibration value after a stated period of normal continuous operation during which no unscheduled maintenance, repair, or adjustment took place.

2.15 Response Time. The amount of time it takes the CEMS to display on the data recorder 95 percent of a step change in opacity.

2.16 Conditioning Period. A period of time (168 hours minimum) during which the CEMS is operated without any unscheduled maintenance, repair, or adjustment prior to initiation of the operational test period.

2.17 Operational Test Period. A period of time (168 hours) during which the CEMS is expected to operate within the established performance specifications without any unscheduled maintenance, repair, or adjustment.

2.18 Path Length. The depth of effluent in the light beam between the receiver and the transmitter of a single-pass transmissometer, or the depth of effluent between the transceiver and reflector of a double-pass transmissometer. Two path lengths are referenced by this specification as follows:

2.18.1 Monitor Path Length. The path length (depth of effluent) at the installed location of the CEMS.

2.18.2 Emission Outlet Path Length. The path length (depth of effluent) at the location where emissions are released to the atmosphere. For noncircular outlets, $D_e=(2LW)\div(L+W)$, where L is the length of the outlet and W is the width of the outlet. Note that this definition does not apply to pressure baghouse outlets with multiple stacks, side discharge vents, ridge roof monitors, etc.

3. *Apparatus*

3.1 Opacity Continuous Emission Monitoring System. Any opacity CEMS that is expected to meet the design and performance specifications in Section 5 and a suitable data recorder, such as an analog strip chart recorder or other suitable device (e.g., digital computer) with an input signal range compatible with the analyzer output.

3.2 Calibration Attenuators. Minimum of three. These attenuators must be optical filters or screens with neutral spectral characteristics selected and calibrated according to the procedures in Sections 7.1.2 and 7.1.3, and of sufficient size to attenuate the entire light beam received by the detector of the transmissometer.

3.3 Upscale Calibration Value Attenuator. An optical filter with neutral spectral characteristics, a screen, or other device that produces an opacity value (corrected for path length, if necessary) that is greater than or equal to the applicable opacity standard but less than or equal to one-half the applicable instrument span value.

3.4 Calibration Spectrophotometer. A laboratory spectrophotometer meeting the following minimum design specifications:

Parameter	Specification
Wavelength range	400–700 nm.
Detector angle of view	<10°.
Accuracy	<0.5 percent transmittance, NBS traceable calibration.

4. *Installation Specifications*

Install the CEMS at a location where the opacity measurements are representative of the total emissions from the affected facility. These requirements can be met as follows:

4.1 Measurement Location. Select a measurement location that is (a) downstream from all particulate control equipment, (b) where condensed water vapor is not present, (c) free of interference from ambient light (applicable only if transmissometer is responsive to ambient light), and (d) accessible in order to permit routine maintenance. Accessibility is an important criterion because easy access for lens cleaning, alignment checks, calibration checks, and blower maintenance will help assure quality data.

4.2 Measurement Path. The primary concern in locating a transmissometer is determining a location of well-mixed stack gas. Two factors contribute to complete mixing of emission gases: turbulence and sufficient mixing time. The criteria listed below define conditions under which well-mixed emissions can be expected.

Select a measurement path that passes through a centroidal area equal to 25 percent of the cross section. Additional requirements or modifications must be met for certain locations as follows:

4.2.1 If the location is in a straight vertical section of stack or duct and is less than 4 equivalent diameters downstream from a bend, use a path that is in the plane defined by the upstream bend (see Figure 1–1).

4.2.2 If the location is in a straight vertical section of stack or duct and is less than 4 equivalent diameters upstream from a bend, use a path that is in the plane defined by the bend (see Figure 1–2).

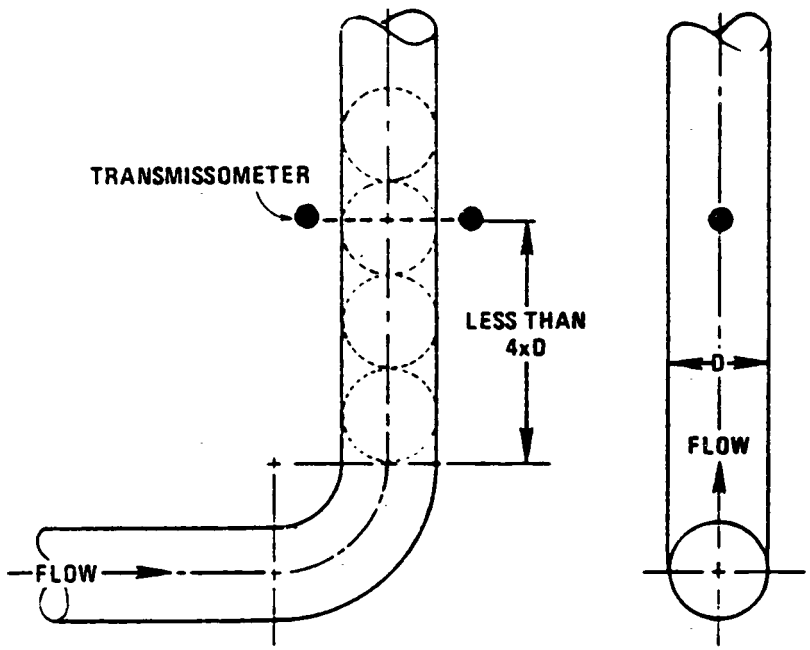

Figure 1-1. Transmissometer location downstream of a bend in a vertical stack.

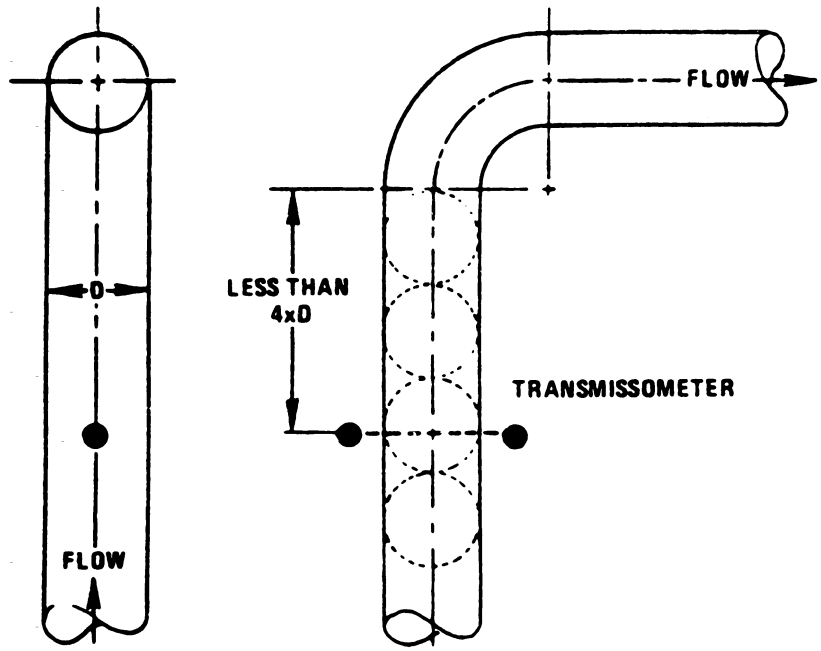

Figure 1-2. Transmissometer location upstream of a bend in a vertical stack.

4.2.3 If the location is in a straight vertical section of stack or duct and is less than 4 diameters downstream and is also less than 1 diameter upstream from a bend, use a path in the plane defined by the upstream bend (see Figure 1–3).

4.2.4 If the location is in a horizontal section of duct and is at least 4 diameters downstream from a vertical bend, use a path in the horizontal plane that is between one-third and one-half the distance up the vertical axis from the bottom of the duct (see Figure 1–4).

4.2.5 If the location is in a horizontal section of duct and is less than 4 diameters downstream from a vertical bend, use a path in the horizontal plane that is between one-half and two-thirds the distance up the vertical axis from the bottom of the duct for upward flow in the vertical section, and is between one-third and one-half the distance up the vertical axis from the bottom of the duct for downward flow (Figure 1–5).

4.3 Alternative Locations and Measurement Paths. Other locations and measurement paths may be selected by demonstrating to the Administrator that the average opacity measured at the alternative location or path is equivalent to the opacity as measured at a location meeting the criteria of Sections 4.1 and 4.2. The opacity at the alternative location is considered equivalent if the average value measured at the alternative location is within the range defined by the average measured opacity ±10 percent at the location meeting the installation criteria in Section 4.2, or if the difference between the two average opacity values is less than 2 percent opacity. To conduct this demonstration, measure the opacities at the two locations or paths for a minimum period of 2 hours and compare the results. The opacities of the two locations or paths may be measured at different times, but must be measured at the same process operating conditions. Alternative procedures

for determining acceptable locations may be used if approved by the Administrator.

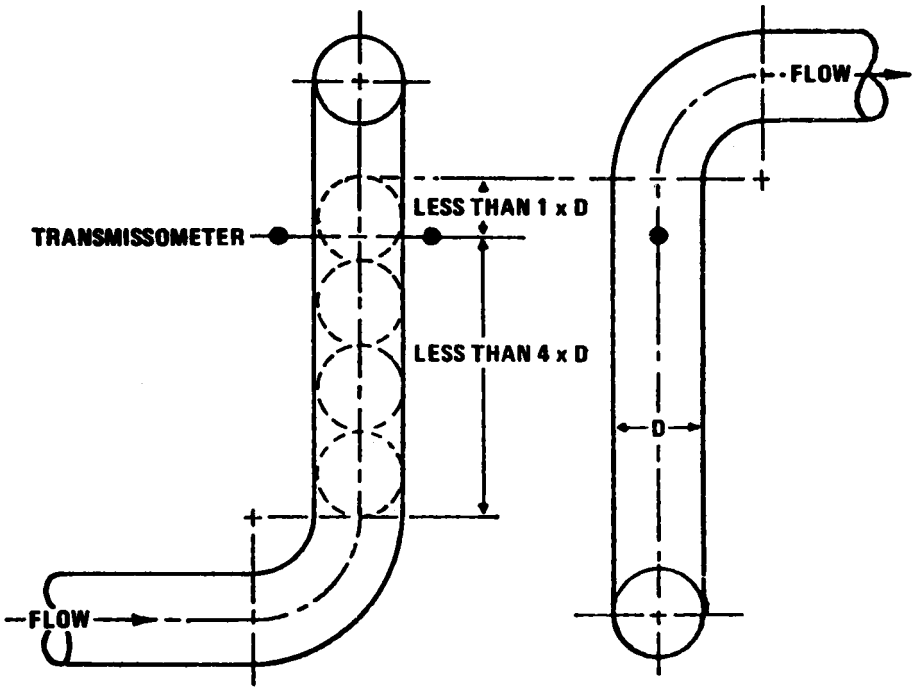

Figure 1-3. Transmissometer location between bends in a vertical stack.

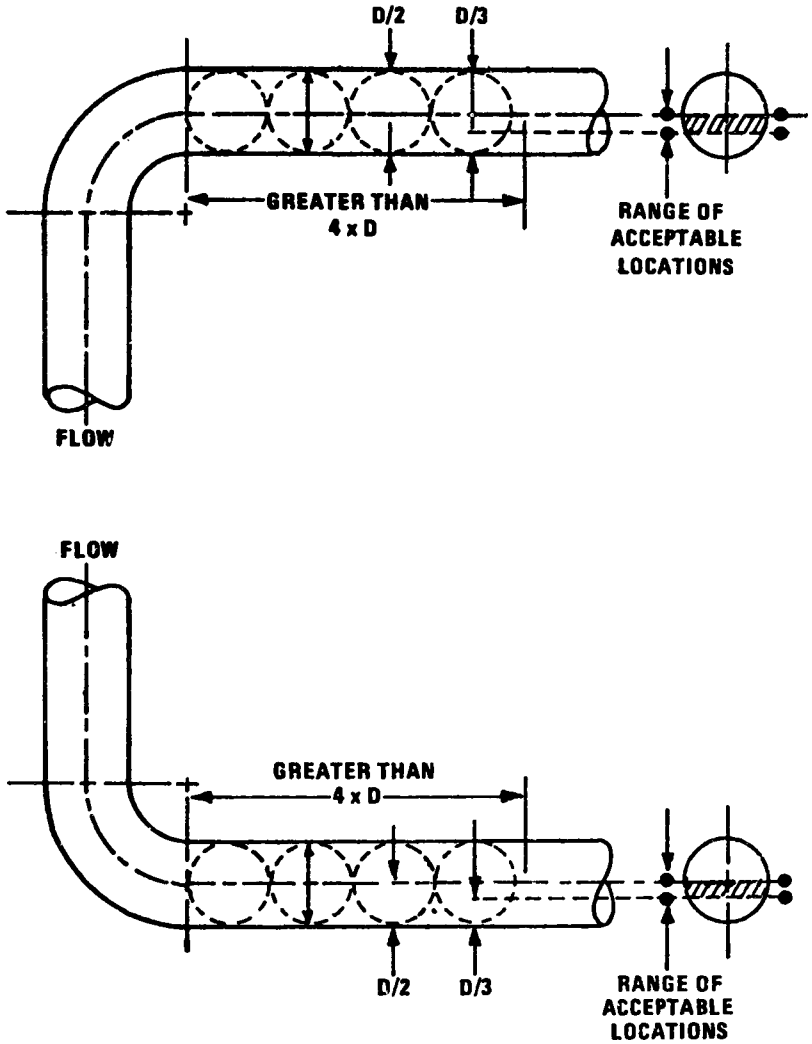

Figure 1-4. Transmissometer location greater than four diameters downstream of a vertical bend in a horizontal stack.

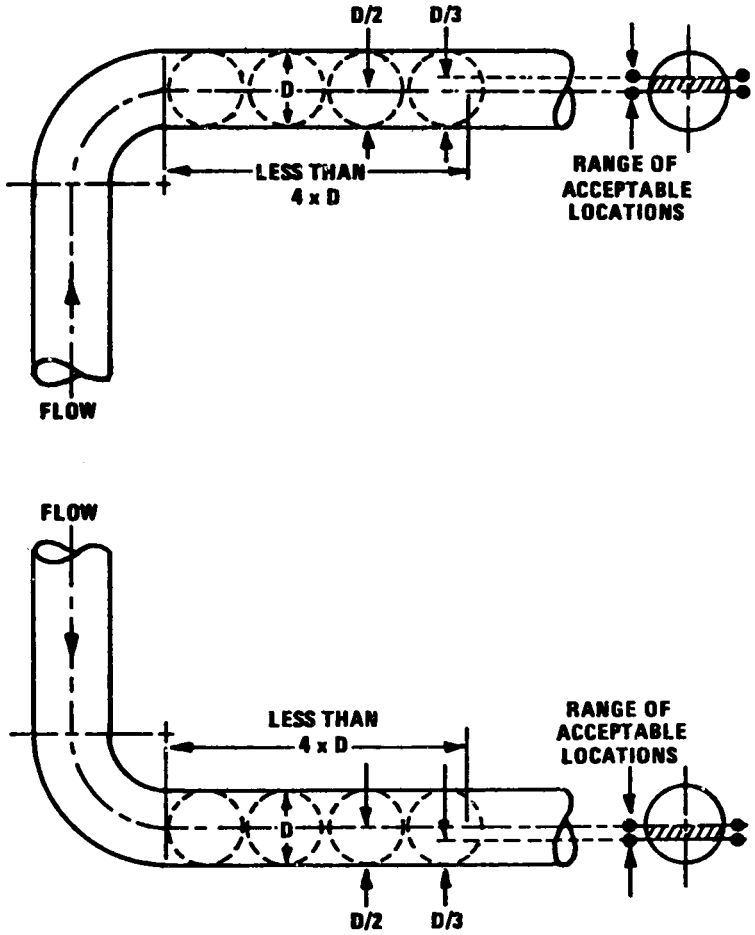

Figure 1-5. Transmissometer location less than four diameters downstream of a vertical bend in a horizontal stack.

5. *Design and Performance Specifications*

5.1 Design Specifications. The CEMS for opacity shall comply with the following design specifications:

5.1.1 Peak and Mean Spectral Responses. The peak and mean spectral responses must occur between 500 nm and 600 nm. The response at any wavelength below 400 nm or above 700 nm shall be less than 10 percent of the peak spectral response.

5.1.2 Angle of View. The total angle of view shall be no greater than 5 degrees.

5.1.3 Angle of Projection. The total angle of projection shall be no greater than 5 degrees.

5.1.4 Optical Alignment Sight. Each analyzer must provide some method for visually determining that the instrument is optically aligned. The method provided must be capable of indicating that the unit is misaligned when an error of +2 percent opacity occurs due to misalignment at a monitor path length of 8 meters. Instruments that are capable of providing an absolute zero check

while in operation on a stack or duct with effluent present, and while maintaining the same optical alignment during measurement and calibration, need not meet this requirement (e.g., some ''zero pipe'' units).

5.1.5 Simulated Zero and Upscale Calibration System. Each analyzer must include a calibration system for simulating a zero (or no greater than 10 percent) opacity and an upscale opacity value for the purpose of performing periodic checks of the transmissometer calibration while on an operating stack or duct. This calibration system will provide, as a minimum, a system check of the analyzer internal optics and all electronic circuitry including the lamp and photodetector assembly.

5.1.6 Access to External Optics. Each analyzer must provide a means of access to the optical surfaces exposed to the effluent stream in order to permit the surfaces to be cleaned without requiring removal of the unit from the source mounting or without requiring optical realignment of the unit.

5.1.7 Automatic Zero Compensation Indicator. If the CEMS has a feature that provides automatic zero compensation for dirt accumulation on exposed optical surfaces, the system must also provide some means of indicating when a compensation of 4 percent opacity has been exceeded. This indicator shall be at a location accessible to the operator (e.g., the data output terminal). During the operational test period, the system must provide some means (manual or automated) for determining the actual amount of zero compensation at the specified 24-hour intervals so that the actual 24-hour zero drift can be determined (see Section 7.4.1).

5.1.8 Slotted Tube. For transmissometers that use slotted tubes, the length of the slotted portion(s) must be equal to or greater than 90 percent of the effluent path length (distance between duct or stack walls). The slotted tube must be of sufficient size and orientation so as not to interfere with the free flow of effluent through the entire optical volume of the transmissometer photodetector. The manufacturer must also show that the transmissometer minimizes light reflections. As a minimum, this demonstration shall consist of laboratory operation of the transmissometer both with and without the slotted tube in position.

Should the operator desire to use a slotted tube design with a slotted portion equal to or less than 90 percent of the monitor path length, the operator must demonstrate to the Administrator that acceptable results can be obtained. As a minimum demonstration, the effluent opacity shall be measured using both the slotted tube instrument and another instrument meeting the requirement of this specification but not of the slotted tube design. The measurements must be made at the same location and at the same process operating conditions for a minimum period of 2 hours with each instrument. The shorter slotted tube may be used if the average opacity measured is equivalent to the opacity measured by the nonslotted tube design. The average opacity measured is equivalent if it is within the opacity range defined by the average opacity value ±10 percent measured by the nonslotted tube design, or if the difference between the average opacities is less than 2 percent opacity.

5.1.9 External Calibration Filter Access (optional). Provisions in the design of the transmissometer to accommodate an external calibration filter assembly are recommended. An adequate design would permit occasional use of external (i.e., not intrinsic to the instrument) neutral density filters to assess monitor operation.

5.2 Performance Specifications. The opacity CEMS specifications are listed in Table 1–1.

6. *Design Specifications Verification Procedure*

These procedures will not apply to all instrument designs and will require modification in some cases; all procedural modifications are subject to the approval of the Administrator.

Test each analyzer for conformance with the design specifications of Sections 5.1.1–5.1.4, or obtain a certificate of conformance from the analyzer manufacturer as follows:

6.1 Spectral Response. Obtain detector response, lamp emissivity, and filter transmittance data for the components used in the measurement system from their respective manufacturers, and develop the effective spectral response curve of the transmissometer. Then determine and report the peak spectral response wavelength, the mean spectral response wavelength, and the maximum response at any wavelength below 400 nm and above 700 nm expressed as a percentage of the peak response.

Alternatively, conduct a laboratory measurement of the instrument's spectral response curve. The procedures of this laboratory evaluation are subject to approval of the Administrator.

TABLE 1–1—PERFORMANCE SPECIFICATIONS

Parameter	Specifications
1. Calibration error [a]	≤3 percent opacity.
2. Response time	≤10 seconds.
3. Conditioning period [b]	≤168 hours.
4. Operational test period [b]	≤168 hours.
5. Zero drift (24-hour) [a]	≤2 percent opacity.
6. Calibration drift (24-hour) [a]	≤2 percent opacity.
7. Data recorder resolution	≤0.5 percent opacity.

[a] Expressed as the sum of the absolute value of the mean and the absolute value of the confidence coefficient.

[b] During the conditioning and operational test periods, the CEMS must not require any corrective maintenance, repair, replacement, or adjustment other than that clearly specified as routine and required in the operation and maintenance manuals.

6.2 Angle of View. Set up the receiver as specified by the manufacturer's written instructions. Draw an arc with radius of 3 meters in the horizontal direction. Using a small (less than 3 centimeters) nondirectional light source, measure the receiver response at 5-centimeter intervals on the arc for 30 centimeters on either side of the detector centerline. Repeat the test in the vertical direction. Then for both the horizontal and vertical directions, calculate the response of the receiver as a function of viewing angle (26 centimeters of arc with a radius of 3 meters equals 5 degrees), report relative angle of view curves, and determine and report the angle of view.

6.3 Angle of Projection. Set up the projector as specified by the manufacturer's written instructions. Draw an arc with a radius of 3 meters in the horizontal direction. Using a small (less than 3 centimeters) photoelectric light detector, measure the light intensity at 5-centimeter intervals on the arc for 30 centimeters on either side of the light source centerline of projection. Repeat the test in the vertical direction. Then for both the horizontal and vertical directions, calculate the response of the photoelectric detector as a function of the projection angle (26 centimeters of arc with a radius of 3 meters equals 5 degrees), report the relative angle of projection curves, and determine and report the angle of projection.

6.4 Optical Alignment Sight. In the laboratory set the instrument up as specified by the manufacturer's written instructions for a monitor path length of 8 meters. Align, zero, and span the instrument. Insert an attenuator of 10 percent (nominal opacity) into the instrument path length. Slowly misalign the projector unit by rotating it until a positive or negative shift of 2 percent opacity is obtained by the data recorder. Then, following the manufacturer's written instructions, check the alignment. The alignment procedure must indicate that the instrument is misaligned. Repeat this test for lateral misalignment of the projector. Realign the instrument and follow the same procedure for checking misalignment of the receiver or retroreflector unit (lateral misalignment only).

6.5 Manufacturer's Certificate of Conformance (alternative to above). Obtain from the manufacturer a certificate of conformance stating that the first analyzer randomly sampled from each month's production was tested according to Sections 6.1 through 6.4 and satisfactorily met all requirements of Section 5 of this specification. If any of the requirements were not met, the certificate must state that the entire month's analyzer production was resampled according to the military standard 105D sampling procedure (MIL–STD–105D) inspection level II; was retested for each of the applicable requirements under Section 5 of this specification; and was determined to be acceptable under MIL–STD–105D procedures, acceptable quality level 1.0. The certificate of conformance must include the results of each test performed for the analyzer(s) sampled during the month the analyzer being installed was produced.

7. *Performance Specification Verification Procedure*

Test each CEMS that conforms to the design specifications (Section 5.1) using the following procedures to determine conformance with the specifications of Table 1–1. These tests are to be performed using the data recording system to be employed during monitoring. Prior approval from the Administrator is required if different data recording systems are used during the performance test and monitoring.

7.1 Preliminary Adjustments and Tests. Before installing the system on the stack, perform these steps or tests at the affected facility or in the manufacturer's laboratory.

7.1.1 Equipment Preparation. Set up and calibrate the CEMS for the monitor path length to be used in the installation as specified by the manufacturer's written instructions. For this specification, the mounting distance between the transmitter and receiver/reflector unit at the source must be measured prior to performing the calibrations (do not use distances from engineering drawings). If the CEMS has automatic path length adjustment, follow the manufacturer's instructions to adjust the signal output from the analyzer in order to yield results based on the emission outlet path length. Set the instrument and data recording system ranges so that maximum instrument output is within the span range specified in the applicable subpart.

Align the instrument so that maximum system response is obtained during a zero (or upscale) check performed across the simulated monitor path length. As part of this alignment, include rotating the reflector unit (detector unit for single pass instruments) on its axis until the point of maximum instrument response is obtained.

Follow the manufacturer's instructions to zero and span the instrument. Perform the zero alignment adjustment by balancing the response of the CEMS so that the simulated zero check coincides with the actual zero check performed across the simulated monitor path length. At this time, measure and record the indicated upscale calibration value. The calibration value reading must be within the required opacity range (Section 3.3).

7.1.2 Calibration Attenuator Selection. Based on the span value specified in the applicable subpart, select a minimum of three calibration attenuators (low, mid, and high range) using Table 1–2.

If the system is operating with automatic path length compensation, calculate the attenuator values required to obtain a system response equivalent to the applicable values shown in Table 1–2; use Equation 1–1 for the conversion. A series of filters with nominal optical density (opacity) values of 0.1(20), 0.2(37), 0.3(50), 0.4(60), 0.5(68), 0.6(75), 0.7(80), 0.8(84), 0.9(88), and 1.0(90) are commercially available. Within this limitation of filter availability, select the calibration attenuators having the values given in Table 1–2 or having values closest to those calculated by Equation 1–1.

$$D_1 = D_2(L_1 / L_2) \qquad \text{Eq. 1-1}$$

TABLE 1–2—REQUIRED CALIBRATION ATTENUATOR VALUES (NOMINAL)

Span value (percent opacity)	Calibrated attenuator optical density (equivalent opacity in parenthesis)—D_2		
	Low-range	Mid-range	High-range
40	0.05 (11)	0.1 (20)	0.2 (37)
50	0.1 (20)	0.2 (37)	0.3 (50)
60	0.1 (20)	0.2 (37)	0.3 (50)
70	0.1 (20)	0.3 (50)	0.4 (60)
80	0.1 (20)	0.3 (50)	0.6 (75)
90	0.1 (20)	0.4 (60)	0.7 (80)
100	0.1 (20)	0.4 (60)	0.9 (87.5)

Where:

D_1=Nominal optical density value of required mid, low, or high range calibration attenuators.

D_2=Desired attenuator optical density output value from Table 1–2 at the span required by the applicable subpart.

L_1=Monitor path length.

L_2=Emission outlet path length.

7.1.3 Attenuator Calibration. Select a laboratory calibration spectrophotometer meeting the specifications of Section 3.4. Using this calibration spectrophotometer, calibrate the required filters or screens. Make measurements at wavelength intervals of 20 nm or less. As an alternative procedure, use the calibration spectrophotometer to measure the C.I.E. Daylight_C luminous transmittance of the attenuators. Check the attenuators several times, at different locations on the attenuator.

The attenuator manufacturer must specify the period of time over which the attenuator values can be considered stable, as well as any special handling and storing procedures required to enhance attenuator stability. To assure stability, recheck attenuator values at intervals less than or equal to the period stability guaranteed by the manufacturer. Recheck at least every 3 months. If desired, perform the stability checks with an instrument (secondary) other than the calibration spectrophotometer. This secondary instrument must be a high-quality laboratory transmissometer or spectrophotometer, and the same instrument must always be used for the stability checks. If a secondary instrument is to be used for stability checks, the value of the calibrated attenuator must be measured on this secondary instrument immediately following initial calibration. If over a period of time an attenuator value changes by more than ±2 percent opacity, recalibrate the attenuator on the calibration spectrophotometer or replace it with a new attenuator.

If this procedure is conducted by the filter or screen manufacturer or by an independent laboratory, obtain a statement certifying the values and certifying that the specified procedure, or equivalent, is used.

7.1.4 Calibration Error Test. Insert the calibration attenuators (low, mid, and high range) in the transmissometer path at or as near the midpoint of the path as feasible. Place the attenuator in the measurement path at a point where the effluent will be measured; i.e., do not place the calibration attenuator in the instrument housing. If the instrument manufacturer recommends a procedure wherein the attenuators are placed in the instrument housing, the manufacturer must provide data showing this alternative procedure is acceptable. While inserting the attenuator, assure that the entire beam received by the detector will pass through the attenuator and that the attenuator is inserted in a manner which minimizes interference from reflected light. Make a total of five nonconsecutive readings for each filter. Record the monitoring system output readings in percent opacity (see example Figure 1–6). Then, if the path length is not adjusted by the measurement system, subtract the actual calibration attenuator value from the value indicated by the measurement system recorder for each of the 15 readings obtained. If the path length is adjusted by the measurement system, subtract the ''path adjusted'' calibration attenuator values from the values indicated by the measurement system recorder (the ''path adjusted'' calibration attenuator values are calculated using Equation 1–6 or 1–7). Calculate the arithmetic mean difference, standard deviation, and confidence coefficient of the five tests at each attenuator value using Equations 1–2, 1–3, and 1–4 (Sections 8.1–8.3). Calculate the sum of the absolute value of the mean difference and the absolute value of the confidence coefficient for each of the three test attenuators; report these three values as the calibration error.

Person Conducting Test _____ Analyzer Manufacturer _____

Affiliation _____ Model/Serial No. _____

Date _____ Location _____

Monitor Pathlength, L_1 _____ Emission Outlet Pathlength, L_2 _____

Monitoring System Output Pathlength Corrected? Yes____ No_____

Calibrated Neutral Density Filter Values

Actual Optical Density (Opacity):

Low-Range_____(_____)

Mid-Range_____(_____)

High Range_____(_____)

Path Adjusted Optical Density (Opacity):

Low-Range_____(_____)

Mid-Range _____(_____)

High-Range_____(_____)

Run Number	Calibration Filter Value (Path-Adjusted Percent Opacity)	Instrument Reading (Opacity), percent	Arithmetic Difference (Opacity), percent		
			Low	Mid	High
1 – Low				–	–
2 – Mid			–		–
3 – High			–	–	
4 – Low				–	–
5 – Mid			–		–
6 – High			–	–	
7 – Low				–	–
8 – Mid			–		–
9 – High			–	–	
10 – Low				–	–
11 – Mid			–		–
12 – High			–	–	
13 – Low				–	–
14 – Mid			–		–
15 – High			–	–	–
		Arithmetic Mean (Equation 1-2): $\bar{X}$			
		Confidence Coefficient (Equation 1-4): CC			
		Calibration Error $\lvert\bar{X}\rvert + \lvert CC\rvert$			

Figure 1-6. Calibration error determination.

7.1.5 System Response Test. Insert the high-range calibration attenuator in the transmissometer path five times, and record the time required for the system to respond to 95 percent of final zero and high-range filter values (see example Figure 1–7). Then calculate the mean time of the 10 upscale and downscale tests and report this value as the system response time.

Person Conducting Test _____ Analyzer Manufacturer _____

Affiliation _____ Model/Serial No. _____

Date _____ Location _____

High Range Calibration Filter Value: Actual Optical Density (Opacity) (_____)

Path Adjusted Optical Density (Opacity) (_____)

Upscale Response Value (0.95 x filter value)_____ percent opacity

Downscale Response Value (0.05 x filter value)_____ percent opacity

Upscale	1 _____	seconds
	2 _____	seconds
	3 _____	seconds
	4 _____	seconds
	5 _____	seconds
Downscale	1 _____	seconds
	2 _____	seconds
	3 _____	seconds
	4 _____	seconds
	5 _____	seconds
	Average response _____	seconds

Figure 1-7. Response time determination.

7.2 Preliminary Field Adjustments. Install the CEMS on the affected facility according to the manufacturer's written instructions and the specifications in Section 4, and perform the following preliminary adjustments:

7.2.1 Optical and Zero Alignment. When the facility is not in operation, optically align the light beam of the transmissometer upon the optical surface located across the duct or stack (i.e., the retroreflector or photodetector, as applicable) in accordance with the manufacturer's instructions; verify the alignment with the optical alignment sight. Under clear stack conditions, verify the zero alignment (performed in Section 7.1.1) by assuring that the monitoring system response for the simulated zero check coincides with the actual zero measured by the transmissometer across the clear stack. Adjust the zero alignment, if necessary. Then, after the affected facility has been started up and the effluent stream reaches normal operating temperature, recheck the optical alignment. If the optical alignment has shifted, realign the optics. Note: Careful consideration should be given to whether a "clear stack" condition exists. It is suggested that the stack be monitored and the data output (instantaneous real-time basis) be examined to determine whether fluctuations from zero opacity are occurring before a clear stack condition is assumed to exist.

7.2.2 Optical and Zero Alignment (Alternative Procedure). The procedure given in 7.2.1 is the preferred procedure and should be used whenever possible; however, if the facility is operating and a zero stack condition cannot practicably be obtained, use the zero alignment obtained during the preliminary adjustments (Section 7.1.1) before installing the transmissometer on the stack. After completing all the preliminary adjustments and tests required in Section 7.1, install the system at the source and align the optics,

i.e., align the light beam from the transmissometer upon the optical surface located across the duct or stack in accordance with the manufacturer's instruction. Verify the alignment with the optical alignment sight. The zero alignment conducted in this manner must be verified and adjusted, if necessary, the first time a clear stack condition is obtained after the operation test period has been completed.

7.3 Conditioning Period. After completing the preliminary field adjustments (Section 7.2), operate the CEMS according to the manufacturer's instructions for an initial conditioning period of not less than 168 hours while the source is operating. Except during times of instrument zero and upscale calibration checks, the CEMS must analyze the effluent gas for opacity and produce a permanent record of the CEMS output. During this conditioning period there must be no unscheduled maintenance, repair, or adjustment. Conduct daily zero calibration and upscale calibration checks; and, when accumulated drift exceeds the daily operating limits, make adjustments and clean the exposed optical surfaces. The data recorder must reflect these checks and adjustments. At the end of the operational test period, verify that the instrument optical alignment is correct. If the conditioning period is interrupted because of source breakdown (record the dates and times of process shutdown), continue the 168-hour period following resumption of source operation. If the conditioning period is interrupted because of monitor failure, restart the 168-hour conditioning period when the monitor becomes operational.

7.4 Operational Test Period. After completing the conditioning period, operate the system for an additional 168-hour period. The 168-hour operational test period need not follow immediately after the 168-hour conditioning period. Except during times of instrument zero and upscale calibration checks, the CEMS must analyze the effluent gas for opacity and must produce a permanent record of the CEMS output. During this period, there will be no unscheduled maintenance, repair, or adjustment. Zero and calibration adjustments, optical surface cleaning, and optical realignment may be performed (optional) only at 24-hour intervals or at such shorter intervals as the manufacturer's written instructions specify. Automatic zero and calibration adjustments made by the CEMS without operator intervention or initiation are allowable at any time. During the operational test period, record all adjustments, realignments, and lens cleanings. If the operational test period is interrupted because of source breakdown, continue the 168-hour period following resumption of source operation. If the test period is interrupted because of monitor failure, restart the 168-hour period when the monitor becomes operational. During the operational test period, perform the following test procedures:

7.4.1 Zero Drift Test. At the outset of the 168-hour operational test period, record the initial simulated zero (or no greater than 10 percent) and upscale opacity readings (see example Figure 1–8). After each 24-hour interval, check and record the final zero reading before any optional or required cleaning and adjustment. Zero and upscale calibration adjustments, optical surface cleaning, and optical realignment may be performed only at 24-hour intervals (or at such shorter intervals as the manufacturer's written instructions specify), but are optional. However, adjustments and cleaning must be performed when the accumulated zero calibration or upscale calibration drift exceeds the 24-hour drift specification (±2 percent opacity). If no adjustments are made after the zero check, record the final zero reading as the initial zero reading for the next 24-hour period. If adjustments are made, record the zero value after adjustment as the initial zero value for the next 24-hour period. If the instrument has an automatic zero compensation feature for dirt accumulation on exposed lenses and the zero value cannot be measured before compensation is entered, then record the amount of automatic zero compensation (as opacity) for the final zero reading of each 24-hour period. (List the indicated zero values of the CEMS in parenthesis.) From the initial and final zero readings, calculate the zero drift for each 24-hour period. Then calculate the arithmetic mean, standard deviation, and confidence coefficient of the 24-hour zero drift and the 95 percent confidence interval using Equations 1–2, 1–3, and 1–4. Calculate the sum of the absolute value of the mean and the absolute value of the confidence coefficient, and report this value as the 24-hour zero drift.

Person Conducting Test _____ Analyzer Manufacturer _____

Affiliation _____ Model/Serial No. _____

Date _____ Location _____

Monitor Pathlength, L_1 _____ Emission Outlet Pathlength, L_2 _____

Monitoring System Output Pathlength Corrected: ? Yes _____ No _____

Upscale Calibration Value: Actual Optical Density (Opacity) _____ (_____)

Path Adjusted Optical Density (Opacity) _____ (_____)

Date	Time		Percent Opacity										Align-ment	
			Zero Reading*		Zero Drift	Zero adjusted?	Upscale Calibration Reading		Upscale Drift	Cali-bration Drift	Span adjusted?	Lens cleaned?	Checked?	Adjusted?
	Begin	End	Initial A	Final B	C = B−A		Initial D	Final E	F = E−D	G = F−C**				

Arithmetic Mean	(Eq. 1-2)		Arithmetic Mean	(Eq. 1-2)	
Confidence Coefficient	(Eq. 1-4)		Confidence Coefficient	(Eq. 1-4)	
Zero Drift	(Eq. 1-5)		Calibration Drift	(Eq. 1-5)	

* without automatic zero compensation

**if zero was adjusted (manually or automatically) prior to upscale check, then use C = 0.

Figure 1-8. Zero calibration drift determination.

7.4.2 Upscale Drift Test. At each 24-hour interval, after the zero calibration value has been checked and any optional or required adjustments have been made, check and record the simulated upscale calibration value. If no further adjustments are made to the calibration system at this time, record the final upscale calibration value as the initial upscale value for the next 24-hour period. If an instrument span adjustment is made, record the upscale value after adjustment as the initial upscale value for the next 24-hour period. From the initial and final upscale readings, calculate the upscale calibration drift for each 24-hour period. Then calculate the arithmetic mean, standard deviation, and confidence coefficient of the 24-

hour calibration drift and the 95 percent confidence interval using Equations 1–2, 1–3, and 1–4. Calculate the sum of the absolute value of the mean and the absolute value of the confidence coefficient, and report this value as the 24-hour calibration drift.

8. *Equations*

8.1 Arithmetic Mean. Calculate the mean, x, of a set of data as follows:

$$\bar{x} = \frac{1}{n}\sum_{i=1}^{n} x_i \qquad \text{(Eq. 1–2)}$$

where:

n=Number of data points.

$$\sum_{i=1}^{n} x_i = \text{Algebraic sum of the individual measurements } x_i.$$

8.2 Standard Deviation. Calculate the standard deviation S_d as follows:

$$S_d = \sqrt{\frac{\sum_{i=1}^{n} x_i^2 - \frac{\left(\sum_{i=1}^{n} x_i\right)^2}{n}}{n-1}} \qquad \text{(Eq. 1–3)}$$

8.3 Confidence Coefficient. Calculate the 2.5 percent error confidence coefficient (one-tailed), CC, as follows:

$$CC = t_{0.975}\frac{S_d}{\sqrt{n}} \qquad \text{Eq. 1–4}$$

Where:

$t_{0.975}$=t-value (see Table 1–3).

8.4 Error. Calculate the error (i.e., calibration error, zero drift, and calibration drift), Er, as follows:

$$Er = |\bar{x}| + |CC| \qquad \text{(Eq. 1–5)}$$

TABLE 1–3—T-VALUES

n[a]	$t_{0.975}$	n[a]	$t_{0.975}$	n[a]	$t_{0.975}$
2	12.706	7	2.447	12	2.201
3	4.303	8	2.365	13	2.179
4	3.182	9	2.306	14	2.160
5	2.776	10	2.262	15	2.145
6	2.571	11	2.228	16	2.131

[a] The values in this table are already corrected for n–1 degrees of freedom. Use n equal to the number of individual values.

8.5 Conversion of Opacity Values from Monitor Path Length to Emission Outlet Path Length. When the monitor path length is different than the emission outlet path length, use either of the following equations to convert from one basis to the other (this conversion may be automatically calculated by the monitoring system):

$$\log(1-Op_2)=(L_2/L_1)\log(1-Op_1) \qquad \text{(Eq. 1–6)}$$

$$D_2=(L_2/L_1)\,D_1 \qquad \text{(Eq. 1–7)}$$

Where:

Op_1 = Opacity of the effluent based upon L_1.
Op_2 = Opacity of the effluent based upon L_2.
L_1 = Monitor path length.
L_2 = Emission outlet path length.
D_1 = Optical density of the effluent based upon L_1.
D_2 = Optical density of the effluent based upon L_2.

9. *Reporting*

Report the following (summarize in tabular form where appropriate).

9.1 General Information.

a. Facility being monitored.
b. Person(s) responsible for operational and conditioning test periods and affiliation.
c. Instrument manufacturer.
d. Instrument model number
e. Instrument serial number.
f. Month/year manufactured.
g. Schematic of monitoring system measurement path location.
h. Monitor pathlength, meters.
i. Emission outlet pathlength, meters.
j. System span value, percent opacity.
k. Upscale calibration value, percent opacity.
l. Calibrated Attenuator values (low, mid, and high range), percent opacity.

9.2 Design Specification Test Results.

a. Peak spectral response, nm.
b. Mean spectral response, nm.
c. Response above 700 nm, percent of peak.
d. Response below 400 nm, percent of peak.
e. Total angle of view, degrees.
f. Total angle of projection, degrees.
g. Results of optical alignment sight test.
h. Serial number, month/year of manufacturer for unit actually tested to show design conformance.

9.3 Performance Specification Test Results.

a. Calibration error, high-range, percent opacity.

b. Calibration error, mid-range, percent opacity.

c. Calibration error, low-range, percent opacity.

d. Response time, seconds.

e. 24-hour zero drift, percent opacity.

f. 24-hour calibration drift, percent opacity.

g. Lens cleanings, clock time.

h. Optical alignment adjustments, clock time.

9.4 Statements. Provide a statement that the conditioning and operational test periods were completed according to the requirements of Sections 7.3 and 7.4. In this statement, include the time periods during which the conditioning and operational test periods were conducted.

9.5 Appendix. Provide the data tabulations and calculations for the above tabulated results.

10. *Retest*

If the CEMS operates within the specified performance parameters of Table 1–1, the PS tests will be successfully concluded. If the CEMS fails one of the preliminary tests, make the necessary corrections and repeat the performance testing for the failed specification prior to conducting the operational test period. If the CEMS fails to meet the specifications for the operational test period, make the necessary corrections and repeat the operational test period; depending on the correction made, it may be necessary to repeat the design and preliminary performance tests.

11. *Bibliography*

1. Experimental Statistics. Department of Commerce. National Bureau of Standards Handbook 91. Paragraph 3–3.1.4 1963. pp. 3–31.

12. Performance Specifications for Stationary-Source Monitoring Systems for Gases and Visible Emissions. U.S. Environmental Protection Agency. Research Triangle Park, NC. EPA–650/2–74–013. January 1974.

PERFORMANCE SPECIFICATION 2—SPECIFICATIONS AND TEST PROCEDURES FOR SO_2 AND NO_x CONTINUOUS EMISSION MONITORING SYSTEMS IN STATIONARY SOURCES

1. *Applicability and Principle*

1.1 Applicability. This specification is to be used for evaluating the acceptability of SO_2 and NO_x continuous emission monitoring systems (CEMS's) at the time of or soon after installation and whenever specified in the regulations. The CEMS may include, for certain stationary sources, a diluent (O_2 or CO_2) monitor.

This specification is not designed to evaluate the installed CEMS performance over an extended period of time nor does it identify specific calibration techniques and other auxiliary procedures to assess the CEMS performance. The source owner or operator, however, is responsible to properly calibrate, maintain, and operate the CEMS. To evaluate the CEMS performance, the Administrator may require, under Section 114 of the Act, the operator to conduct CEMS performance evaluations at other times besides the initial test. See §60.13(c).

1.2 Principle. Installation and measurement location specifications, performance and equipment specifications, test procedures, and data reduction procedures are included in this specification. Reference method tests and calibration drift tests are conducted to determined conformance of the CEMS with the specification.

2. *Definitions*

2.1 Continuous Emission Monitoring System. The total equipment required for the determination of a gas concentration or emission rate. The system consists of the following major subsystems:

2.1.1 Sample Interface. That portion of the CEMS used for one or more of the following: sample acquisition, sample transportation, and sample conditioning, or protection of the monitor from the effects of the stack effluent.

2.1.2 Pollutant Analyzer. That portion of the CEMS that senses the pollutant gas and generates an output proportional to the gas concentration.

2.1.3 Diluent Analyzer (if applicable). That portion of the CEMS that senses the diluent gas (e.g., CO_2 or O_2) and generates an output proportional to the gas concentration.

2.1.4 Data Recorder. That portion of the CEMS that provides a permanent record of the analyzer output. The data recorder may include automatic data reduction capabilities.

2.2 Point CEMS. A CEMS that measures the gas concentration either at a single point or along a path equal to or less than 10 percent of the equivalent diameter of the stack or duct cross section.

2.3 Path CEMS. A CEMS that measures the gas concentration along a path greater than 10 percent of the equivalent diameter of the stack or duct cross section.

2.4 Span Value. The upper limit of a gas concentration measurement range specified for affected source categories in the applicable subpart of the regulations.

2.5 Relative Accuracy (RA). The absolute mean difference between the gas concentration or emission rate determined by the CEMS and the value determined by the RM's plus the 2.5 percent error confidence coefficient of a series of tests divided by the mean of the RM tests or the applicable emission limit.

2.6 Calibration Drift (CD). The difference in the CEMS output readings from the established reference value after a stated period of operation during which no unscheduled maintenance, repair, or adjustment took place.

2.7 Centroidal Area. A concentric area that is geometrically similar to the stack or duct cross section and is no greater than 1 percent of the stack or duct cross-sectional area.

2.8 Representative Results. As defined by the RM test procedure outlined in this specification.

3. *Installation and Measurement Location Specifications*

3.1 The CEMS Installation and Measurement Location. Install the CEMS at an accessible location where the pollutant concentration or emission rate measurements are directly representative or can be corrected so as to be representative of the total emissions from the affected facility or at the measurement location cross section. Then select representative measurement points or paths for monitoring in locations that the CEMS will pass the RA test (see Section 7). If the cause of failure to meet the RA test is determined to be the measurement location and a satisfactory correction technique cannot be established, the Administrator may require the CEMS to be relocated.

Suggested measurement locations and points or paths that are most likely to provide data that will meet the RA requirements are listed below.

3.1.1 Measurement Location. It is suggested that the measurement location be (1) at least two equivalent diameters downstream from the nearest control device, the point of pollutant generation, or other point at which a change in the pollutant concentration or emission rate may occur and (2) at least a half equivalent diameter upstream from the effluent exhaust or control device.

3.1.2 Point CEMS. It is suggested that the measurement point be (1) no less than 1.0 meter from the stack or duct wall or (2) within or centrally located over the centroidal area of the stack or duct cross section.

3.1.3 Path CEMS. It is suggested that the effective measurement path (1) be totally within the inner area bounded by a line 1.0 meter from the stack or duct wall, or (2) have at least 70 percent of the path within the inner 50 percent of the stack or duct cross-sectional area, or (3) be centrally located over any part of the centroidal area.

3.2 Reference Method (RM) Measurement Location and Traverse Points. Select, as appropriate, an accessible RM measurement point at least two equivalent diameters downstream from the nearest control device, the point of pollutant generation, or other point at which a change in the pollutant concentration or emission rate may occur, and at least a half equivalent diameter upstream from the effluent exhaust or control device. When pollutant concentration changes are due solely to diluent leakage (e.g., air heater leakages) and pollutants and diluents are simultaneously measured at the same location, a half diameter may be used in lieu of two equivalent diameters. The CEMS and RM locations need not be the same.

Then select traverse points that assure acquisition of representative samples over the stack or duct cross section. The minimum requirements are as follows: Establish a ''measurement line'' that passes through the centroidal area and in the direction of any expected stratification. If this line interferes with the CEMS measurements, displace the line up to 30 cm (or 5 percent of the equivalent diameter of the cross section, whichever is less) from the centroidal area. Locate three traverse points at 16.7, 50.0, and 83.3 percent of the measurement line. If the measurement line is longer than 2.4 meters and pollutant stratification is not expected, the tester may choose to locate the three traverse points on the line at 0.4, 1.2, and 2.0 meters from the stack or duct wall. This option must not be used after wet scrubbers or at points where two streams with different pollutant concentrations are combined. The tester may select other traverse points, provided that they can be shown to the satisfaction of the Administrator to provide a representative sample over the stack or duct cross section. Conduct all necessary RM tests within 3 cm (but no less than 3 cm from the stack or duct wall) of the traverse points.

4. *Performance and Equipment Specifications*

4.1 Data Recorder Scale. The CEMS data recorder response range must include zero and a high-level value. The high-level value is chosen by the source owner or operator and is defined as follows:

For a CEMS intended to measure an uncontrolled emission (e.g., SO_2 measurements at the inlet of a flue gas desulfurization unit), the high-level value must be between 1.25 and 2 times the average potential emission level, unless otherwise specified in an applicable subpart of the regulations. For a CEMS installed to measure controlled emissions or emissions that are in compliance with an applicable regulation, the high-level value must be between 1.5 times the pollutant concentration corresponding to the emission standard level and the span value. If a lower high-level value is used, the source must have the capability of measuring emissions which exceed the full-scale limit of the CEMS in accordance with the requirements of applicable regulations.

The data recorder output must be established so that the high-level value is read between 90 and 100 percent of the data recorder full scale. (This scale requirement may not be applicable to digital data recorders.) The calibration gas, optical filter, or cell values used to establish the data recorder scale should produce the zero and high-level values. Alternatively, a calibration gas, optical filter, or cell value between 50 and 100 percent of the high-level value may be used in place of the high-level value provided the data recorder full-scale requirements as described above are met.

The CEMS design must also allow the determination of calibration drift at the zero and high-level values. If this is not possible or practical, the design must allow these determinations to be conducted at a low-level value (zero to 20 percent of the high-level value) and at a value between 50 and 100 percent of the high-level value. In special cases, if not already approved, the Administrator may approve a single-point calibration-drift determination.

4.2 Calibration Drift. The CEMS calibration must not drift or deviate from the reference value of the gas cylinder, gas cell, or optical filter by more than 2.5 percent of the span value. If the CEMS includes pollutant and diluent monitors, the calibration drift must be determined separately for each in terms of concentrations (see PS 3 for the diluent specifications).

4.3 The CEMS RA. The RA of the CEMS must be no greater than 20 percent of the mean value of the RM test data in terms of the units of the emission standard or 10 percent of the applicable standard, whichever is greater. For SO_2 emission standards between 130 and 86 ng/J (0.30 and 0.20 lb/million Btu), use 15 percent of the applicable standard; below 86 ng/J (0.20 lb/million Btu), use 20 percent of emission standard.

5. *Performance Specification Test Procedure*

5.1 Pretest Preparation. Install the CEMS, prepare the RM test site according to the specifications in Section 3, and prepare the CEMS for operation according to the manufacturer's written instructions.

5.2 Calibration Drift Test Period. While the affected facility is operating at more than 50 percent of normal load, or as specified in an applicable subpart, determine the magnitude of the calibration drift (CD) once each day (at 24-hour intervals) for 7 consecutive days according to the procedure given in Section 6. To meet the requirement of Section 4.2, none of the CD's must exceed the specification.

5.3 RA Test Period. Conduct the RA test according to the procedure given in Section 7 while the affected facility is operating at more than 50 percent or normal load, or as specified in an applicable subpart. To meet the specifications, the RA must be equal to or less than 20 percent of the mean value of the RM test data in terms of the units of the emission standard or 10 percent of the applicable standard, whichever is greater. For instruments that use common components to measure more than one effluent gas constituent, all channels must simultaneously pass the RA requirement, unless it can be demonstrated that any adjustments made to one channel did not affect the others.

The RA test may be conducted during the CD test period.

6. *The CEMS Calibration Drift Test Procedure*

The CD measurement is to verify the ability of the CEMS to conform to the established CEMS calibration used for determining the emission concentration or emission rate. Therefore, if periodic automatic or manual adjustments are made to the CEMS zero and calibration settings, conduct the CD test immediately before these adjustments, or conduct it in such a way that the CD can be determined.

Conduct the CD test at the two points specified in Section 4.1. Introduce to the CEMS the reference gases, gas cells, or optical filters (these need not be certified). Record the CEMS response and subtract this value from the reference value (see example data sheet in Figure 2–1).

7. *Relative Accuracy Test Procedure*

7.1 Sampling Strategy for RM Tests. Conduct the RM tests in such a way that they will yield results representative of the emissions from the source and can be correlated to the CEMS data. Although it is preferable to conduct the diluent (if applicable), moisture (if needed), and pollutant measurements simultaneously, the diluent and moisture measurements that are taken within a 30- to 60-minute period, which includes the pollutant measurements, may be used to calculate dry pollutant concentration and emission rate.

In order to correlate the CEMS and RM data properly, mark the beginning and end of each RM test period of each run (including the exact time of the day) on the CEMS chart recordings or other permanent record of output. Use the following strategies for the RM tests:

7.1.1 For integrated samples, e.g., Method 6 and Method 4, make a sample traverse of at least 21 minutes, sampling for 7 minutes at each traverse point.

7.1.2 For grab samples, e.g., Method 7, take one sample at each traverse point, scheduling the grab samples so that they are taken simultaneously (within a 3-minute period) or are an equal interval of time apart over a 21-minute (or less) period. A test run for grab samples must be made up of at least three separate measurements.

NOTE: At times, CEMS RA tests are conducted during new source performance standards performance tests. In these cases, RM

results obtained during CEMS RA tests may be used to determine compliance as long as the source and test conditions are consistent with the applicable regulations.

7.2 Correlation of RM and CEMS Data. Correlate the CEMS and the RM test data as to the time and duration by first determining from the CEMS final output (the one used for reporting) the integrated average pollutant concentration or emission rate for each pollutant RM test period. Consider system response time, if important, and confirm that the pair of results are on a consistent moisture, temperature, and diluent concentration basis. Then, compare each integrated CEMS value against the corresponding average RM value. Use the following guidelines to make these comparisons.

7.2.1 If the RM has an integrated sampling technique, make a direct comparison of the RM results and CEMS integrated average value.

7.2.2 If the RM has a grab sampling technique, first average the results from all grab samples taken during the test run and then compare this average value against the integrated value obtained from the CEMS chart recording or output during the run. If the pollutant concentration is varying with time over the run, the tester may choose to use the arithmetic average of the CEMS value recorded at the time of each grab sample.

7.3 Number of RM Tests. Conduct a minimum of nine sets of all necessary RM tests. Conduct each set within a period of 30 to 60 minutes.

NOTE: The tester may choose to perform more than nine sets of RM tests. If this option is chosen, the tester may, at his discretion, reject a maximum of three sets of the test results so long as the total number of test results used to determine the RA is greater than or equal to nine, but he must report all data including the rejected data.

7.4 Reference Methods. Unless otherwise specified in an applicable subpart of the regulations, Methods 3B, 4, 6, and 7, or their approved alternatives, are the reference methods for diluent (O_2 and CO_2), moisture, SO_2, and NO_x, respectively.

7.5 Calculations. Summarize the results on a data sheet. An example is shown in Figure 2–2. Calculate the mean of the RM values. Calculate the arithmetic differences between the RM and the CEMS output sets. Then calculate the mean of the difference, standard deviation, confidence coefficient, and CEMS RA, using Equations 2–1, 2–2, 2–3, and 2–4.

8. *Equations*

8.1 Arithmetic Mean. Calculate the arithmetic mean of the difference, d, of a data set as follows:

$$\bar{d} = \frac{1}{n}\sum_{i=1}^{n} d_i \qquad \text{(Eq. 2–1)}$$

Where:

n=Number of data points.

$\sum_{i=1}^{n} d_i$ = Algebraic sum of the individual differences d_i.

When the mean of the differences of pairs of data is calculated, be sure to correct the data for moisture, if applicable.

8.2 Standard Deviation. Calculate the standard deviation, S_d, as follows:

$$S_d = \left[\frac{\sum_{i=1}^{n} d_i^2 - \frac{\left(\sum_{i=1}^{n} d_i\right)^2}{n}}{n-1}\right]^{1/2} \qquad \text{(Eq. 2–2)}$$

8.3 Confidence Coefficient. Calculate the 2.5 percent error confidence coefficient (one-tailed), CC, as follows:

$$CC = t_{0.975}\frac{S_d}{\sqrt{n}} \qquad \text{Eq. 2-3}$$

Where:

$t_{0.975}$=t-value (see Table 2–1)

TABLE 2–1— T-VALUES

n[a]	$t_{0.975}$	n[a]	$t_{0.975}$	n[a]	$t_{0.975}$
2	12.706	7	2.447	12	2.201
3	4.303	8	2.365	13	2.179
4	3.182	9	2.306	14	2.160
5	2.776	10	2.262	15	2.145
6	2.571	11	2.228	16	2.131

[a] The values in this table are already corrected for n-1 degrees of freedom. Use n equal to the number of individual values.

8.4 Relative Accuracy. Calculate the RA of a set of data as follows:

$$RA = \frac{|\bar{d}| + |CC|}{\overline{RM}} \times 100 \qquad \text{(Eq. 2–4)}$$

Where:

$|\bar{d}|$=Absolute value of the mean of differences (from Equation 2–1).

|CC|=Absolute value of the confidence coefficient (from Equation 2–3).

RM=Average RM value or applicable standard.

9. *Reporting*

At a minimum (check with the appropriate regional office, or State, or local agency for additional requirements, if any) summarize in tabular form the results of the CD tests and the relative accuracy tests or alternative RA procedure as appropriate. Include all data sheets, calculations, charts (records

of CEMS responses), cylinder gas concentration certifications, and calibration cell response certifications (if applicable), necessary to substantiate that the performance of the CEMS met the performance specifications.

10. *Alternative Procedures*

10.1 Alternative to Relative Accuracy Procedure in section 7. Paragraphs 60.13(j) (1) and (2) contain criteria for which the reference method relative accuracy may be waived and the following procedure substituted.

10.1.1 Conduct a complete CEMS status check following the manufacturer's written instructions. The check should include operation of the light source, signal receiver, timing mechanism functions, data acquisition and data reduction functions, data recorders, mechanically operated functions (mirror movements, zero pipe operation, calibration gas valve operations, etc.), sample filters, sample line heaters, moisture traps, and other related functions of the CEMS, as applicable. All parts of the CEMS shall be functioning properly before proceeding to the alternative RA procedure.

10.1.2 Challenge each monitor (both pollutant and diluent, if applicable) with cylinder gases of known concentrations or calibration cells that produce known responses at two measurement points within the following ranges:

MEASUREMENT RANGE

Measurement point	Pollutant monitor	Diluent monitor for	
		CO_2	O_2
1	20–30 percent of span value.	5–8 percent by volume.	4–6 percent by volume.
2	50–60 percent of span value.	10–14 percent by volume.	8–12 percent by volume.

Use a separate cylinder gas or calibration cell for measurement points 1 and 2. Challenge the CEMS and record the responses three times at each measurement point. Do not dilute gas from a cylinder when challenging the CEMS. Use the average of the three responses in determining relative accuracy.

Operate each monitor in its normal sampling mode as nearly as possible. When using cylinder gases, pass the cylinder gas through all filters, scrubbers, conditioners, and other monitor components used during normal sampling and as much of the sampling probe as practical. When using calibration cells, the CEMS components used in the normal sampling mode should not be by-passed during the RA determination. These include light sources, lenses, detectors, and reference cells. The CEMS should be challenged at each measurement point for a sufficient period of time to assure adsorption-desorption reactions on the CEMS surfaces have stabilized.

Use cylinder gases that have been certified by comparison to National Bureau of Standards (NBS) gaseous standard reference material (SRM) or NBS/EPA-approved gas manufacturer's certified reference material (CRM) (See Citation 2 in the Bibliography) following EPA traceability protocol Number 1 (See Citation 3 in the Bibliography). As an alternative to protocol Number 1 gases, CRM's may be used directly as alternative RA cylinder gases. A list of gas manufacturers that have prepared approved CRM's is available from EPA at the address shown in Citation 2. Procedures for preparation of CRM are described in Citation 2.

Use calibration cells certified by the manufacturer to produce a known response in the CEMS. The cell certification procedure shall include determination of CEMS response produced by the calibration cell in direct comparison with measurement of gases of known concentration. This can be accomplished using SRM or CRM gases in a laboratory source simulator or through extended tests using reference methods at the CEMS location in the exhaust stack. These procedures are discussed in Citation 4 in the Bibliography. The calibration cell certification procedure is subject to approval of the Administrator.

10.1.3 The differences between the known concentrations of the cylinder gases and the concentrations indicated by the CEMS are used to assess the accuracy of the CEMS.

The calculations and limits of acceptable relative accuracy (RA) are as follows:

(a) For pollutant CEMS:

$$RA = \left| \frac{d}{AC} \times 100 \right| \leq 15 \text{ percent}$$

Where:

d=Difference between response and the known concentration/response.

AC=The known concentration/response of the cylinder gas or calibration cell.

(b) For diluent CEMS:

$RA=|d| \leq 0.7$ percent O_2 or CO_2, as applicable.

NOTE: Waiver of the relative accuracy test in favor of the alternative RA procedure does not preclude the requirements to complete the calibration drift (CD) tests nor any other requirements specified in the applicable regulation(s) for reporting CEMS data and performing CEMS drift checks or audits.

	Day	Date and time	Calibration value	Monitor value	Difference	Percent of span value
Low-level						
High-level						

Figure 2-1. Calibration drift determination.

Run No.	Date and time	SO_2			NO_x[b]			CO_2 or O_2[a]		SO_2[a]			NO_x[a]		
		RM	M	DIFF	RM	M	DIFF	RM	M	RM	M	DIFF	RM	M	DIFF
		ppm[c]			ppm[c]			%[c]	%[c]	mass/GCV			mass/GCV		
1															
2															
3															
4															
5															
6															
7															
8															
9															
10															
11															
12															
Average															
Confidence Interval															
Accuracy															

[a] For steam generators; [b] Average of three samples; [c] Make sure that RM and M data are on a consistent basis, either wet or dry.

Figure 2-2. Relative accuracy determination.

11. *Bibliography*

1. Department of Commerce. Experimental Statistics. Handbook 91. Washington, DC, p. 3–31, paragraphs 3–3.1.4.

2. ''A Procedure for Establishing Traceability of Gas Mixtures to Certain National Bureau of Standards Standard Reference Materials.'' Joint publication by NBS and EPA. EPA–600/7–81–010. Available from

U.S. Environmental Protection Agency, Quality Assurance Division (MD–77), Research Triangle Park, NC 27711.

3. ''Traceability Protocol for Establishing True Concentrations of Gases Used for Calibration and Audits of Continuous Source Emission Monitors. (Protocol Number 1).'' June 1978. Protocol Number 1 is included in the *Quality Assurance Handbook for Air Pollution Measurement Systems, Volume III, Stationary Source Specific Methods.* EPA–600/4–77–027b. August 1977. Volume III is available from the U.S. EPA, Office of Research and Development Publications, 26 West St. Clair Street, Cincinnati, OH 45268.

4. ''Gaseous Continuous Emission Monitoring Systems—Performance Specification Guidelines for SO_2, NO_x, CO_2, O_2, and TRS.'' EPA–450/3–82–026. Available from U.S. Environmental Protection Agency, Emission Standards and Engineering Division (MD–19), Research Triangle Park, NC 27711.

PERFORMANCE SPECIFICATION 3—SPECIFICATIONS AND TEST PROCEDURES FOR O_2 AND CO_2 CONTINUOUS EMISSION MONITORING SYSTEMS IN STATIONARY SOURCES

1. *Applicability and Principle*

1.1 Applicability. This specification is to be used for evaluating acceptability of O_2 and CO_2 continuous emission monitoring systems (CEM's) at the time of or soon after installation and whenever specified in an applicable subpart of the regulations. The specification applies to O_2 or CO_2 monitors that are not included under Performance Specification 2 (PS 2).

This specification is not designed to evaluate the installed CEMS performance over an extended period of time, nor does it identify specific calibration techniques and other auxiliary procedures to assess the CEMS performance. The source owner or operator, however, is responsible to calibrate, maintain, and operate the CEMS properly. To evaluate the CEMS performance, the Administrator may require, under Section 114 of the Act, the operator to conduct CEMS performance evaluations in addition to the initial test. See Section 60.13(c).

The definitions, installation and measurement location specifications, test procedures, data reduction procedures, reporting requirements, and bibliography are the same as in PS 2, Sections 2, 3, 5, 6, 8, 9, and 10, and also apply to O_2 and CO_2 CEMS's under this specification. The performance and equipment specifications and the relative accuracy (RA) test procedures for O_2 and CO_2 CEMS do not differ from those for SO_2 and NO_x CEMS, except as noted below.

1.2 Principle. Reference method (RM) tests and calibration drift tests are conducted to determine conformance of the CEMS with the specification.

2. *Performance and Equipment Specifications*

2.1 Instrument Zero and Span. This specification is the same as Section 4.1 of PS 2.

2.2 Calibration Drift. The CEMS calibration must not drift by more than 0.5 percent O_2 or CO_2 from the reference value of the gas, gas cell, or optical filter.

2.3 The CEMS RA. The RA of the CEMS must be no greater than 20 percent of the mean value of the RM test data or 1.0 percent O_2 or CO_2 , whichever is greater.

3. *Relative Accuracy Test Procedure*

3.1 Sampling Strategy for RM Tests, Correlation of RM and CEMS Data, Number of RM Tests, and Calculations. This is the same as PS 2, Sections 7.1, 7.2, 7.3, and 7.5, respectively.

3.2 Reference Method. Unless otherwise specified in an applicable subpart of the regulations, Method 3B of appendix A or any approved alternative is the RM for O_2 or CO_2.

PERFORMANCE SPECIFICATION 4—SPECIFICATIONS AND TEST PROCEDURES FOR CARBON MONOXIDE CONTINUOUS EMISSION MONITORING SYSTEMS IN STATIONARY SOURCES

1. *Applicability and Principle*

1.1 Applicability. This specification is to be used for evaluating the acceptability of carbon monoxide (CO) continuous emission monitoring systems (CEMS) at the time of or soon after installation and whenever specified in an applicable subpart of the regulations.

This specification is not designed to evaluate the installed CEMS performance over an extended period of time nor does it identify specific calibration techniques and other auxiliary procedures to assess CEMS performance. The source owner or operator, however, is responsible to calibrate, maintain, and operate the CEMS. To evaluate CEMS performance, the Administrator may require, under section 114 of the Act, the source owner or operator to conduct CEMS performance evaluations at other times besides the initial test. See §60.13(c).

The definitions, installation specifications, test procedures, data reduction procedures for determining calibration drifts (CD) and relative accuracy (RA), and reporting of Performance Specification 2 (PS 2), Sections 2, 3, 5, 6, 8, and 9 apply to this specification.

1.2 Principle. Reference method (RM), CD, and RA tests are conducted to determine that the CEMS conforms to the specification.

2. *Performance and Equipment Specifications*

2.1 Instrument Zero and Span. This specification is the same as Section 4.1 of PS 2.

2.2 Calibration Drift. The CEMS calibration must not drift or deviate from the reference value of the calibration gas, gas cell, or optical filter by more than 5 percent of the established span value for 6 out of 7 test

days (e.g., the established span value is 1000 ppm for subpart J affected facilities).

2.3 Relative Accuracy. The RA of the CEMS shall be no greater than 10 percent of the mean value of the RM test data in terms of the units of the emission standard or 5 percent of the applicable standard, whichever is greater.

3. *Relative Accuracy Test Procedure*

3.1 Sampling Strategy for RM Tests, Correlation of RM and CEMS Data, Number of RM Tests, and Calculations. These are the same as PS 2, Sections 7.1, 7.2, 7.3, and 7.5, respectively.

3.2 Reference Methods. Unless otherwise specified in an applicable subpart of the regulation, Method 10 is the RM for this PS. When evaluating nondispersive infrared continuous emission analyzers, Method 10 shall use the alternative interference trap specified in section 10.1 of the method. Method 10A or 10B is an acceptable alternative to method 10.

4. *Bibliography*

1. Ferguson, B.B., R.E. Lester, and W.J. Mitchell. Field Evaluation of Carbon Monoxide and Hydrogen Sulfide Continuous Emission Monitors at an Oil Refinery. U.S. Environmental Protection Agency. Research Triangle Park, NC. Publication No. EPA–600/4–82–054. August 1982. 100 p.

2. Repp, M. Evaluation of Continuous Monitors for Carbon Monoxide in Stationary Sources. U.S. Environmental Protection Agency. Research Triangle Park, NC. Publication No. EPA–600/2–77–063. March 1977/ 155 p.

3. Smith, F., D.E. Wagoner, and R.P. Donovan. Guidelines for Development of a Quality Assurance Program: Volume VIII—Determination of CO Emissions from Stationary Sources by NDIR Spectrometry. U.S. Environmental Protection Agency. Research Triangle Park, NC. Publication No. EPA–650/4–74–005–h. February 1975. 96 p.

PERFORMANCE SPECIFICATION 4A—SPECIFICATIONS AND TEST PROCEDURES FOR CARBON MONOXIDE CONTINUOUS EMISSION MONITORING SYSTEMS IN STATIONARY SOURCES

1. Applicability and Principle

1.1 Applicability.

1.1.1 This specification is to be used for evaluating the acceptability of carbon monoxide (CO) continuous emission monitoring systems (CEMS's) at the time of or soon after installation and whenever specified in an applicable subpart of the regulations.

1.1.2 This specification is not designed to evaluate the installed CEMS performance over an extended period of time nor does it identify specific calibration techniques and other auxiliary procedures to assess CEMS performance. The source owner or operator, however, is responsible to calibrate, maintain, and operate the CEMS. To evaluate CEMS performance, the Administrator may require, under section 114 of the Act, the source owner or operator to conduct CEMS performance evaluations at other times besides the initial test. See §60.13(c).

1.1.3 The definition, installation specifications, test procedures, data reduction procedures for determining calibration drifts (CD) and relative accuracy (RA), and reporting of Performance Specification 2 (PS 2), sections 2, 3, 5, 6, 8, and 9 apply to this specification.

1.2 Principle. Reference method (RM), CD and RA tests are conducted to determine that the CEMS conforms to the specification.

2. Performance and Equipment Specifications

2.1 Data Recorder Scale. This specification is the same as section 4.1 of PS 2. The CEMS shall be capable of measuring emission levels under normal conditions and under periods of short-duration peaks of high concentrations. This dual-range capability may be met using two separate analyzers, one for each range, or by using dual-range units which have the capability of measuring both levels with a single unit. In the latter case, when the reading goes above the full-scale measurement value of the lower range, the higher-range operation shall be started automatically. The CEMS recorder range must include zero and a high-level value.

For the low-range scale, the high-level value shall be between 1.5 times the pollutant concentration corresponding to the emission standard level and the span value. For the high-range scale, the high-level value shall be set at 2000 ppm, as a minimum, and the range shall include the level of the span value. There shall be no concentration gap between the low- and high-range scales.

2.2 Interference Check. The CEMS must be shown to be free from the effects of any interferences.

2.3 Response Time. The CEMS response time shall not exceed 1.5 min to achieve 95 percent of the final stable value.

2.4 Calibration Drift. The CEMS calibration must not drift or deviate from the reference value of the calibration gas, gas cell, or optical filter by more than 5 percent of the established span value for 6 out of 7 test days.

2.5 Relative Accuracy. The RA of the CEMS shall be no greater than 10 percent of the mean value of the RM test data in terms of the units of the emission standard or 5 ppm, whichever is greater. Under conditions where the average CO emissions are less than 10 percent of the standard, a cylinder gas audit may be performed in place of the RA test to determine compliance with these limits. In this case, the cylinder gas shall contain CO in 12 percent carbon dioxide as an interference check. If this option is exercised,

Method 10 must be used to verify that emission levels are less than 10 percent of the standard.

3. Response Time Test Procedure

The response time test applies to all types of CEMS's, but will generally have significance only for extractive systems. The entire system is checked with this procedure including applicable sample extraction and transport, sample conditioning, gas analyses, and data recording.

Introduce zero gas into the system. For extractive systems, the calibration gases should be introduced at the probe as near to the sample location as possible. For in-situ systems, introduce the zero gas at the sample interface so that all components active in the analysis are tested. When the system output has stabilized (no change greater than 1 percent of full scale for 30 sec), switch to monitor stack effluent and wait for a stable value. Record the time (upscale response time) required to reach 95 percent of the final stable value. Next, introduce a high-level calibration gas and repeat the procedure (stabilize, switch the sample, stabilize, record). Repeat the entire procedure three times and determine the mean upscale and downscale response times. The slower or longer of the two means is the system response time.

4. Relative Accuracy Test Procedure

4.1 Sampling Strategy for RM Tests, Correlation of RM and CEMS Data, Number of RM Tests, and Calculations. These are the same as PS 2, sections 7.1, 7.2, 7.3, and 7.5, respectively.

4.2 Reference Methods. Unless otherwise specified in an applicable subpart of the regulation, Method 10 is the RM for this PS. When evaluating nondispersive infrared continuous emission analyzers, Method 10 shall use the alternative interference trap specified in section 10.1 of the method. Method 10A or 10B is an acceptable alternative to Method 10.

5. Bibliography

1. Same as in Performance Specification 4, section 4.

2. ''Gaseous Continuous Emission Monitoring Systems—Performance Specification Guidelines for SO_2, NO_x, CO_2, O_2, and TRS.'' EPA–450/3–82–026. U.S. Environmental Protection Agency, Technical Support Division (MD–19). Research Triangle Park, NC 27711.

PERFORMANCE SPECIFICATION 4B—SPECIFICATIONS AND TEST PROCEDURES FOR CARBON MONOXIDE AND OXYGEN CONTINUOUS MONITORING SYSTEMS IN STATIONARY SOURCES

a. Applicability and Principle

1.1 Applicability. a. This specification is to be used for evaluating the acceptability of carbon monoxide (CO) and oxygen (O_2) continuous emission monitoring systems (CEMS) at the time of or soon after installation and whenever specified in the regulations. The CEMS may include, for certain stationary sources, (a) flow monitoring equipment to allow measurement of the dry volume of stack effluent sampled, and (b) an automatic sampling system.

b. This specification is not designed to evaluate the installed CEMS' performance over an extended period of time nor does it identify specific calibration techniques and auxiliary procedures to assess the CEMS' performance. The source owner or operator, however, is responsible to properly calibrate, maintain, and operate the CEMS. To evaluate the CEMS' performance, the Administrator may require, under section 114 of the Act, the operator to conduct CEMS performance evaluations at times other than the initial test.

c. The definitions, installation and measurement location specifications, test procedures, data reduction procedures, reporting requirements, and bibliography are the same as in PS 3 (for O_2) and PS 4A (for CO) except as otherwise noted below.

1.2 Principle. Installation and measurement location specifications, performance specifications, test procedures, and data reduction procedures are included in this specification. Reference method tests, calibration error tests, calibration drift tests, and interferant tests are conducted to determine conformance of the CEMS with the specification.

b. Definitions

2.1 *Continuous Emission Monitoring System (CEMS).* This definition is the same as PS 2 Section 2.1 with the following addition. A continuous monitor is one in which the sample to be analyzed passes the measurement section of the analyzer without interruption.

2.2 *Response Time.* The time interval between the start of a step change in the system input and when the pollutant analyzer output reaches 95 percent of the final value.

2.3 *Calibration Error (CE).* The difference between the concentration indicated by the CEMS and the known concentration generated by a calibration source when the entire CEMS, including the sampling interface

is challenged. A CE test procedure is performed to document the accuracy and linearity of the CEMS over the entire measurement range.

3. Installation and Measurement Location Specifications

3.1 *The CEMS Installation and Measurement Location.* This specification is the same as PS 2 Section 3.1 with the following additions. Both the CO and O_2 monitors should be installed at the same general location. If this is not possible, they may be installed at different locations if the effluent gases at both sample locations are not stratified and there is no in-leakage of air between sampling locations.

3.1.1 *Measurement Location.* Same as PS 2 Section 3.1.1.

3.1.2 *Point CEMS.* The measurement point should be within or centrally located over the centroidal area of the stack or duct cross section.

3.1.3 *Path CEMS.* The effective measurement path should: (1) Have at least 70 percent of the path within the inner 50 percent of the stack or duct cross sectional area, or (2) be centrally located over any part of the centroidal area.

3.2 *Reference Method (RM) Measurement Location and Traverse Points.* This specification is the same as PS 2 Section 3.2 with the following additions. When pollutant concentration changes are due solely to diluent leakage and CO and O_2 are simultaneously measured at the same location, one half diameter may be used in place of two equivalent diameters.

3.3 *Stratification Test Procedure.* Stratification is defined as the difference in excess of 10 percent between the average concentration in the duct or stack and the concentration at any point more than 1.0 meter from the duct or stack wall. To determine whether effluent stratification exists, a dual probe system should be used to determine the average effluent concentration while measurements at each traverse point are being made. One probe, located at the stack or duct centroid, is used as a stationary reference point to indicate change in the effluent concentration over time. The second probe is used for sampling at the traverse points specified in Method 1 (40 CFR part 60 appendix A). The monitoring system samples sequentially at the reference and traverse points throughout the testing period for five minutes at each point.

d. Performance and Equipment Specifications

4.1 Data Recorder Scale. For O_2, same as specified in PS 3, except that the span must be 25 percent. The span of the O_2 may be higher if the O_2 concentration at the sampling point can be greater than 25 percent. For CO, same as specified in PS 4A, except that the low-range span must be 200 ppm and the high range span must be 3000 ppm. In addition, the scale for both CEMS must record all readings within a measurement range with a resolution of 0.5 percent.

4.2 *Calibration Drift.* For O_2, same as specified in PS 3. For CO, the same as specified in PS 4A except that the CEMS calibration must not drift from the reference value of the calibration standard by more than 3 percent of the span value on either the high or low range.

4.3 *Relative Accuracy (RA).* For O_2, same as specified in PS 3. For CO, the same as specified in PS 4A.

4.4 *Calibration Error (CE).* The mean difference between the CEMS and reference values at all three test points (see Table I) must be no greater than 5 percent of span value for CO monitors and 0.5 percent for O_2 monitors.

4.5 *Response Time.* The response time for the CO or O_2 monitor must not exceed 2 minutes.

e. Performance Specification Test Procedure

5.1 *Calibration Error Test and Response Time Test Periods.* Conduct the CE and response time tests during the CD test period.

F. The CEMS Calibration Drift and Response Time Test Procedures

The response time test procedure is given in PS 4A, and must be carried out for both the CO and O_2 monitors.

7. Relative Accuracy and Calibration Error Test Procedures

7.1 *Calibration Error Test Procedure.* Challenge each monitor (both low and high range CO and O_2) with zero gas and EPA Protocol 1 cylinder gases at three measurement points within the ranges specified in Table I.

TABLE I. CALIBRATION ERROR CONCENTRATION RANGES

Measurement point	CO Low range (ppm)	CO High range (ppm)	O_2 (%)
1	0–40	0–600	0–2
2	60–80	900–1200	8–10
3	140–160	2100–2400	14–16

Operate each monitor in its normal sampling mode as nearly as possible. The calibration gas must be injected into the sample system as close to the sampling probe outlet as practical and should pass through all CEMS components used during normal sampling. Challenge the CEMS three non-consecutive times at each measurement point and record the responses. The duration of each gas injection should be sufficient to ensure that the CEMS surfaces are conditioned.

7.1.1 *Calculations.* Summarize the results on a data sheet. Average the differences between the instrument response and the certified cylinder gas value for each gas. Calculate the CE results according to:

$$CE = |d/FS| \times 100 \qquad (1)$$

where *d* is the mean difference between the CEMS response and the known reference concentration and *FS* is the span value.

7.2 *Relative Accuracy Test Procedure.* Follow the RA test procedures in PS 3 (for O_2) section 3 and PS 4A (for CO) section 4.

7.3 *Alternative RA Procedure.* Under some operating conditions, it may not be possible to obtain meaningful results using the RA test procedure. This includes conditions where consistent, very low CO emission or low CO emissions interrupted periodically by short duration, high level spikes are observed. It may be appropriate in these circumstances to waive the RA test and substitute the following procedure.

Conduct a complete CEMS status check following the manufacturer's written instructions. The check should include operation of the light source, signal receiver, timing mechanism functions, data acquisition and data reduction functions, data recorders, mechanically operated functions, sample filters, sample line heaters, moisture traps, and other related functions of the CEMS, as applicable. All parts of the CEMS must be functioning properly before the RA requirement can be waived. The instrument must also successfully passed the CE and CD specifications. Substitution of the alternate procedure requires approval of the Regional Administrator.

8. Bibliography

1. 40 CFR Part 266, Appendix IX, Section 2, ''Performance Specifications for Continuous Emission Monitoring Systems.''

PERFORMANCE SPECIFICATION 5—SPECIFICATIONS AND TEST PROCEDURES FOR TRS CONTINUOUS EMISSION MONITORING SYSTEMS IN STATIONARY SOURCES

1. *Applicability and Principle*

1.1 Applicability. This specification is to be used for evaluating the acceptability of total reduced sulfur (TRS) and whenever specified in an applicable subpart of the regulations. (At present, these performance specifications do not apply to petroleum refineries, subpart J.) Sources affected by the promulgation of the specification shall be allowed 1 year beyond the promulgation date to install, operate, and test the CEMS. The CEMS's may include O_2 monitors which are subject to Performance Specification 3 (PS 3).

The definitions, installation specifications, test procedures, and data reduction procedures for determining calibration drifts (CD's) and relative accuracy (RA), and reporting of PS 2, Sections 2, 3, 4, 5, 6, 8, and 9 also apply to this specification and must be consulted. The performance and equipment specifications do not differ from PS 2 except as listed below and are included in this specification.

1.2 Principle. The CD and RA tests are conducted to determine conformance of the CEMS with the specification.

2. *Performance and Equipment Specifications*

2.1 Instrument Zero and Span. The CEMS recorder span must be set at 90 to 100 percent of recorder full-scale using a span level between 1.5 times the pollutant concentration corresponding to the emission standard level and the span value. The CEMS design shall also allow the determination of calibration at the zero level of the calibration curve. If zero calibration is not possible or is impractical, this determination may be conducted at a low level (up to 20 percent of span value) point. The components of an acceptable permeation tube system are listed on pages 87–94 of Citation 4.2 of the Bibliography.

2.2 Calibration Drift. The CEMS detector calibration must not drift or deviate from the reference value of the calibration gas by more than 5 percent (1.5 ppm) of the established span value of 30 ppm for 6 out of 7 test days. If the CEMS includes pollutant and diluent monitors, the CD must be determined separately for each in terms of concentrations (see PS 3 for the diluent specifications).

2.3 The CEMS Relative Accuracy. The RA of the CEMS shall be no greater than 20 percent of the mean value of the reference method (RM) test data in terms of the units of the emission standard or 10 percent of the applicable standard, whichever is greater.

3. *Relative Accuracy Test Procedure*

3.1 Sampling Strategy for RM Tests, Correlation of RM and CEMS Data, Number of RM Tests, and Calculations. This is the same as PS 2, Sections 7.1, 7.2, 7.3, and 7.5, respectively. Note: For Method 16, a sample is made up of at least three separate injects equally spaced over time. For Method 16A, a sample is collected for at least 1 hour.

3.2 Reference Methods. Unless otherwise specified in an applicable subpart of the regulations, Method 16, Method 16A, or other approved alternative, shall be the RM for TRS.

4. *Bibliography*

1. Department of Commerce. Experimental Statistics. National Bureau of Standards. Handbook 91. 1963. Paragraphs 3–3.1.4, p. 3–31.

2. A Guide to the Design, Maintenance and Operation of TRS Monitoring Systems. National Council for Air and Stream Improvement Technical Bulletin No. 89. September 1977.

3. Observation of Field Performance of TRS Monitors on a Kraft Recovery Furnace. National Council for Air and Stream Improvement Technical Bulletin No. 91. January 1978.

PERFORMANCE SPECIFICATION 6—SPECIFICATIONS AND TEST PROCEDURES FOR CONTINUOUS EMISSION RATE MONITORING SYSTEMS IN STATIONARY SOURCES

1. Applicability and Principle

1.1 Applicability. The applicability for this specification is the same as Section 1.1 of Performance Specification 2 (PS 2), except this specification is to be used for evaluating the acceptability of continuous emission rate monitoring systems (CERMS's). The installation and measurement location specifications, performance specification test procedure, data reduction procedures, and reporting requirements of PS 2, Section 3, 5, 8, and 9, apply to this specification.

1.2 Principle. Reference method (RM), calibration drift (CD), and relative accuracy (RA) tests are conducted to determine that the CERMS conforms to the specification.

2. Definitions

The definitions are the same as in Section 2 of PS 2, except that this specification refers to the continuous emission rate monitoring system rather than the continuous emission monitoring system. The following definitions are added:

2.1 Continuous Emission Rate Monitoring System (CERMS). The total equipment required for the determination and recording of the pollutant mass emission rate (in terms of mass per unit of time).

2.2 Flow Rate Sensor. That portion of the CERMS that senses the volumetric flow rate and generates an output proportional to flow rate. The flow rate sensor shall have provisions to check the CD for each flow rate parameter that it measures individually (e.g., velocity pressure).

3. Performance and Equipment Specifications

3.1 Data Recorder Scale. Same as Section 4.1 of PS 2.

3.2 CD. Since the CERMS includes analyzers for several measurements, the CD shall be determined separately for each analyzer in terms of its specific measurement. The calibration for each analyzer used for the measurement of flow rate except a temperature analyzer shall not drift or deviate from either of its reference values by more than 3 percent of 1.25 times the average potential absolute value for that measurement. For a temperature analyzer, the specification is 1.5 percent of 1.25 times the average potential absolute temperature. The CD specification for each analyzer for which other PS's have been established (e.g., PS 2 for SO_2 and NO_x), shall be the same as in the applicable PS.

3.3 CERMS RA. The RA of the CERMS shall be no greater than 20 percent of the mean value of the RM's test data in terms of the units of the emission standard, or 10 percent of the applicable standard, whichever is greater.

4. CD Test Procedure

The CD measurements are to verify the ability of the CERMS to conform to the established CERMS calibrations used for determining the emission rate. Therefore, if periodic automatic or manual adjustments are made to the CERMS zero and calibration settings, conduct the CD tests immediately before these adjustments, or conduct them in such a way what CD can be determined.

Conduct the CD tests for pollutant concentration at the two values specified in Section 4.1 of PS 2. For each of the other parameters that are selectively measured by the CERMS (e.g., velocity pressure), use two analogous values: one that represents zero to 20 percent of the high-level value (a value that is between 1.25 and 2 times the average potential value) for that parameter, and one that represents 50 to 100 percent of the high-level value. Introduce, or activate internally, the reference signals to the CERMS (these need not be certified). Record the CERMS response to each, and subtract this value from the respective reference value (see example data sheet in Figure 6–1).

5. RA Test Procedure

5.1 Sampling Strategy for RM's Tests, Correlation of RM and CERMS Data, Number of RM's Tests, and Calculations. These are the same as PS 2, Sections 7.1, 7.2, 7.3, and 7.5, respectively. Summarize the results on a data sheet. An example is shown in Figure 6–2. The RA test may be conducted during the CD test period.

5.2 Reference Methods (RM's). Unless otherwise specified in the applicable subpart of the regulations, the RM for the pollutant gas is the appendix A method that is cited for compliance test purposes, or its approved alternatives. Methods 2, 2A, 2B, 2C, or 2D, as applicable are the RM's for the determination of volumetric flow rate.

6. Bibliography

1. Brooks, E.F., E.C. Beder, C.A. Flegal, D.J. Luciani, and R. Williams. Continuous Measurement of Total Gas Flow Rate from Stationary Sources. U.S. Envionmental Protection Agency. Research Triangle Park, NC. Publication No. EPA–650/2–75–020. February 1975. 248 p.

PERFORMANCE SPECIFICATION 7—SPECIFICATIONS AND TEST PROCEDURES FOR HYDROGEN SULFIDE CONTINUOUS EMISSION MONITORING SYSTEMS IN STATIONARY SOURCES

1. Applicability and Principle

1.1 *Applicability*. 1.1.1 This specification is to be used for evaluating the acceptability of hydrogen sulfide (H_2S) continuous emission monitoring systems (CEMS's) at the time of or soon after installation and whenever specified in an applicable subpart of the regulations.

1.1.2 This specification is not designed to evaluate the installed CEMS performance over an extended period of time nor does it identify specific calibration techniques and other auxiliary procedures to assess CEMS performance. The source owner or operator, however, is responsible to calibrate, maintain, and operate the CEMS. To evaluate CEMS performance, the Administrator may require, under Section 114 of the Act, the source owner or operator to conduct CEMS performance evaluations at other times besides the initial test. *See* §60.13(c).

1.1.3 The definitions, installation specifications, test procedures, data reduction procedures for determining calibration drifts (CD) and relative accuracy (RA), and reporting of Performance Specification 2 (PS 2), Sections 2, 3, 5, 6, 8, and 9 apply to this specification.

1.2 Principle. Reference method (RM), CD, and RA tests are conducted to determine that the CEMS conforms to the specification.

2. Performance and Equipment Specifications

2.1 *Instrument zero and span*. This specification is the same as Section 4.1 of PS 2.

2.2 *Calibration drift*. The CEMS calibration must not drift or deviate from the reference value of the calibration gas or reference source by more than 5 percent of the established span value for 6 out of 7 test days (e.g., the established span value is 300 ppm for subpart J fuel gas combustion devices).

2.3 *Relative accuracy*. The RA of the CEMS shall be no greater than 20 percent of the mean value of the RM test data in terms of the units of the emission standard or 10 percent of the applicable standard, whichever is greater.

3. Relative Accuracy Test Procedure

3.1 Sampling Strategy for RM Tests, Correlation of RM and CEMS Data Number of RM Tests, and Calculations. These are the same as that in PS 2, §7.1, 7.2, 7.3, and 7.5, respectively.

3.2 Reference Methods. Unless otherwise specified in an applicable subpart of the regulation, Method 11 is the RM for this PS.

4. Bibliography

1. U.S. Environmental Protection Agency. Standards of Performance for New Stationary Sources; Appendix B; Performance Specifications 2 and 3 for SO_2, NO_x, CO_2, and O_2 Continuous Emission Monitoring Systems; Final Rule. 48 CFR 23608. Washington, DC, U.S. Government Printing Office. May 25, 1983.

2. U.S. Government Printing Office. Gaseous Continuous Emission Monitoring Systems—Performance Specification Guidelines for SO_2, NO_x, CO_2, O_2, and TRS. U.S. Environmental Protection Agency. Washington, DC, EPA–450/3–82–026. October 1982. 26p.

3. Maines, G.D., W.C. Kelly (Scott Environmental Technology, Inc.), and J.B. Homolya. Evaluation of Monitors for Measuring H_2S in Refinery Gas. Prepared for the U.S. Environmental Protection Agency. Research Triangle Park, NC, Contract No. 68–02–2707. 1978. 60 p.

4. Ferguson, B.B., R.E. Lester (Harmon Engineering and Testing), and W.J. Mitchell. Field Evaluation of Carbon Monoxide and Hydrogen Sulfide Continuous Emission Monitors at an Oil Refinery. Prepared for the U.S. Environmental Protection Agency. Research Triangle Park, NC. Publication No. EPA–600/4–82–054. August 1982. 100 p.

PERFORMANCE SPECIFICATION 8—PERFORMANCE SPECIFICATIONS FOR VOLATILE ORGANIC COMPOUND CONTINUOUS EMISSION MONITORING SYSTEMS IN STATIONARY SOURCES

1. Applicability and Principle

1.1 Applicability.

1.1.1 This specification is to be used for evaluating a continuous emission monitoring system (CEMS) that measures a mixture of volatile organic compounds (VOC's) and generates a single combined response value. The VOC detection principle may be flame ionization (FI), photoionization (PI), nondispersive infrared absorption (NDIR), or any other detection principle that is appropriate for the VOC species present in the emission gases and that meets this performance specification. The performance specification includes procedures to evaluate the acceptability of the CEMS at the time of or soon after its installation and whenever specified in emission regulations or permits. This specification is not designed to evaluate the installed CEMS performance over an extended period of time, nor does it identify specific calibration techniques and other auxiliary procedures to assess the CEMS performance. However, it is the responsibility of the source owner or operator, to calibrate, maintain, and operate the CEMS properly. Under section 114 of the Act, the Administrator may require the operator to evaluate the CEMS performance by conducting CEMS

performance evaluations in addition to the initial test. See section 60.13(c).

The definitions, installation and measurement location specifications, test procedures, data reduction procedures, reporting requirements, and bibliography are the same as in PS 2, sections 2, 3, 5, 6, 8, 9, and 10, and also apply to VOC CEMS's under this specification. The performance and equipment specifications and the relative accuracy (RA) test procedures for VOC CEMS do not differ from those for SO_2 and NO_x CEMS, except as noted below.

1.1.2 In most emission circumstances, most VOC monitors can provide only a relative measure of the total mass or volume concentration of a mixture of organic gases, rather than an accurate quantification. This problem is removed when an emission standard is based on a total VOC measurement as obtained with a particular detection principle. In those situations where a true mass or volume VOC concentration is needed, the problem can be mitigated by using the VOC CEMS as a relative indicator of total VOC concentration if statistical analysis indicates that a sufficient margin of compliance exists for this approach to be acceptable. Otherwise, consideration can be given to calibrating the CEMS with a mixture of the same VOC's in the same proportions as they actually occur in the measured source. In those circumstances where only one organic species is present in the source, or where equal incremental amounts of each of the organic species present generate equal CEMS responses, the latter choice can be more easily achieved.

1.2 Principle. Calibration drift and relative accuracy tests are conducted to determine the adherence of the CEMS to specifications given for those items. The performance specifications include criteria for installation and measurement location, equipment and performance, and procedures for testing and data reduction.

2. Performance and Equipment Specifications

2.1 VOC CEMS Selection. When possible, select a VOC CEMS with the detection principle of the reference method specified in the regulation or permit (usually either FI, NDIR, or PI). Otherwise, use knowledge of the source process chemistry, previous emission studies, or gas chromatographic analysis of the source gas to select an appropriate VOC CEMS. Exercise extreme caution in choosing and installing any CEMS in an area with the potential for explosive hazards.

2.2 Data Recorder Scale. Same as section 4.1 of PS 2.

2.3 Calibration Drift. The CEMS calibration must not drift by more than 2.5 percent of the span value.

2.4 CEMS Relative Accuracy. Unless stated otherwise in the regulation or permit, the RA of the CEMS must be no greater than 20 percent of the mean value of the reference method (RM) test data in terms of the units of the emission standard, or 10 percent of the applicable standard, whichever is greater.

3. Relative Accuracy Test Procedure

3.1 Sampling Strategy for RM Tests, Correlation of RM and CEMS Data, Number of RM Tests, and Calculations. Follow PS 2, sections 7.1, 7.2, 7.3, and 7.5, respectively.

3.2 Reference Method. Use the method specified in the applicable regulation or permit, or any approved alternative, as the RM.

PERFORMANCE SPECIFICATION 8A—SPECIFICATIONS AND TEST PROCEDURES FOR TOTAL HYDROCARBON CONTINUOUS MONITORING SYSTEMS IN STATIONARY SOURCES

1. Applicability and Principle

1.1 *Applicability*. These performance specifications apply to hydrocarbon (HC) continuous emission monitoring systems (CEMS) installed on stationary sources. The specifications include procedures which are intended to be used to evaluate the acceptability of the CEMS at the time of its installation or whenever specified in regulations or permits. The procedures are not designed to evaluate CEMS performance over an extended period of time. The source owner or operator is responsible for the proper calibration, maintenance, and operation of the CEMS at all times.

1.2 *Principle.* A gas sample is extracted from the source through a heated sample line and heated filter to a flame ionization detector (FID). Results are reported as volume concentration equivalents of propane. Installation and measurement location specifications, performance and equipment specifications, test and data reduction procedures, and brief quality assurance guidelines are included in the specifications. Calibration drift, calibration error, and response time tests are conducted to determine conformance of the CEMS with the specifications.

2. Definitions

2.1 *Continuous Emission Monitoring System (CEMS).* The total equipment used to acquire data, which includes sample extraction and transport hardware, analyzer, data recording and processing hardware, and software. The system consists of the following major subsystems:

2.1.1 *Sample Interface.* That portion of the system that is used for one or more of the following: Sample acquisition, sample transportation, sample conditioning, or protection of the analyzer from the effects of the stack effluent.

2.1.2 *Organic Analyzer.* That portion of the system that senses organic concentration

and generates an output proportional to the gas concentration.

2.1.3 *Data Recorder.* That portion of the system that records a permanent record of the measurement values. The data recorder may include automatic data reduction capabilities.

2.2 *Instrument Measurement Range.* The difference between the minimum and maximum concentration that can be measured by a specific instrument. The minimum is often stated or assumed to be zero and the range expressed only as the maximum.

2.3 *Span or Span Value.* Full scale instrument measurement range. The span value must be documented by the CEMS manufacturer with laboratory data.

2.4 *Calibration Gas.* A known concentration of a gas in an appropriate diluent gas.

2.5 *Calibration Drift (CD).* The difference in the CEMS output readings from the established reference value after a stated period of operation during which no unscheduled maintenance, repair, or adjustment takes place. A CD test is performed to demonstrate the stability of the CEMS calibration over time.

2.6 *Response Time.* The time interval between the start of a step change in the system input (e.g., change of calibration gas) and the time when the data recorder displays 95 percent of the final value.

2.7 *Accuracy.* A measurement of agreement between a measured value and an accepted or true value, expressed as the percentage difference between the true and measured values relative to the true value. For these performance specifications, accuracy is checked by conducting a calibration error (CE) test.

2.8 *Calibration Error (CE).* The difference between the concentration indicated by the CEMS and the known concentration of the cylinder gas. A CE test procedure is performed to document the accuracy and linearity of the monitoring equipment over the entire measurement range.

2.9 *Performance Specification Test (PST) Period.* The period during which CD, CE, and response time tests are conducted.

2.10 *Centroidal Area.* A concentric area that is geometrically similar to the stack or duct cross section and is no greater than 1 percent of the stack or duct cross-sectional area.

3. Installation and Measurement Location Specifications

3.1 *CEMS Installation and Measurement Locations.* The CEMS must be installed in a location in which measurements representative of the source's emissions can be obtained. The optimum location of the sample interface for the CEMS is determined by a number of factors, including ease of access for calibration and maintenance, the degree to which sample conditioning will be required, the degree to which it represents total emissions, and the degree to which it represents the combustion situation in the firebox (where applicable). The location should be as free from in-leakage influences as possible and reasonably free from severe flow disturbances. The sample location should be at least two equivalent duct diameters downstream from the nearest control device, point of pollutant generation, or other point at which a change in the pollutant concentration or emission rate occurs and at least 0.5 diameter upstream from the exhaust or control device. The equivalent duct diameter is calculated as per 40 CFR part 60, appendix A, method 1, section 2.1. If these criteria are not achievable or if the location is otherwise less than optimum, the possibility of stratification should be investigated as described in section 3.2. The measurement point must be within the centroidal area of the stack or duct cross section.

3.2 *Stratification Test Procedure.* Stratification is defined as a difference in excess of 10 percent between the average concentration in the duct or stack and the concentration at any point more than 1.0 meter from the duct or stack wall. To determine whether effluent stratification exists, a dual probe system should be used to determine the average effluent concentration while measurements at each traverse point are being made. One probe, located at the stack or duct centroid, is used as a stationary reference point to indicate the change in effluent concentration over time. The second probe is used for sampling at the traverse points specified in 40 CFR part 60 appendix A, method 1. The monitoring system samples sequentially at the reference and traverse points throughout the testing period for five minutes at each point.

4. CEMS Performance and Equipment Specifications

If this method is applied in highly explosive areas, caution and care must be exercised in choice of equipment and installation.

4.1 *Flame Ionization Detector (FID) Analyzer.* A heated FID analyzer capable of meeting or exceeding the requirements of these specifications. Heated systems must maintain the temperature of the sample gas between 150 °C (300 °F) and 175 °C (350 °F) throughout the system. This requires all system components such as the probe, calibration valve, filter, sample lines, pump, and the FID to be kept heated at all times such that no moisture is condensed out of the system. The essential components of the measurement system are described below:

4.1.1 *Sample Probe.* Stainless steel, or equivalent, to collect a gas sample from the centroidal area of the stack cross-section.

4.1.2 *Sample Line.* Stainless steel or Teflon tubing to transport the sample to the analyzer.

NOTE: Mention of trade names or specific products does not constitute endorsement by the Environmental Protection Agency.

4.1.3 *Calibration Valve Assembly.* A heated three-way valve assembly to direct the zero and calibration gases to the analyzer is recommended. Other methods, such as quick-connect lines, to route calibration gas to the analyzers are applicable.

4.1.4 *Particulate Filter.* An in-stack or out-of-stack sintered stainless steel filter is recommended if exhaust gas particulate loading is significant. An out-of-stack filter must be heated.

4.1.5 *Fuel.* The fuel specified by the manufacturer (e.g., 40 percent hydrogen/60 percent helium, 40 percent hydrogen/60 percent nitrogen gas mixtures, or pure hydrogen) should be used.

4.1.6 *Zero Gas.* High purity air with less than 0.1 parts per million by volume (ppm) HC as methane or carbon equivalent or less than 0.1 percent of the span value, whichever is greater.

4.1.7 *Calibration Gases.* Appropriate concentrations of propane gas (in air or nitrogen). Preparation of the calibration gases should be done according to the procedures in EPA Protocol 1. In addition, the manufacturer of the cylinder gas should provide a recommended shelf life for each calibration gas cylinder over which the concentration does not change by more than ±2 percent from the certified value.

4.2 *CEMS Span Value.* 100 ppm propane. The span value must be documented by the CEMS manufacturer with laboratory data.

4.3 *Daily Calibration Gas Values.* The owner or operator must choose calibration gas concentrations that include zero and high-level calibration values.

4.3.1 The zero level may be between zero and 0.1 ppm (zero and 0.1 percent of the span value).

4.3.2 The high-level concentration must be between 50 and 90 ppm (50 and 90 percent of the span value).

4.4 *Data Recorder Scale.* The strip chart recorder, computer, or digital recorder must be capable of recording all readings within the CEMS' measurement range and must have a resolution of 0.5 ppm (0.5 percent of span value).

4.5 *Response Time.* The response time for the CEMS must not exceed 2 minutes to achieve 95 percent of the final stable value.

4.6 *Calibration Drift.* The CEMS must allow the determination of CD at the zero and high-level values. The CEMS calibration response must not differ by more than ±3 ppm (±3 percent of the span value) after each 24-hour period of the 7-day test at both zero and high levels.

4.7 *Calibration Error.* The mean difference between the CEMS and reference values at all three test points listed below must be no greater than 5 ppm (±5 percent of the span value).

4.7.1 *Zero Level.* Zero to 0.1 ppm (0 to 0.1 percent of span value).

4.7.2 *Mid-Level.* 30 to 40 ppm (30 to 40 percent of span value).

4.7.3 *High-Level.* 70 to 80 ppm (70 to 80 percent of span value).

4.8 *Measurement and Recording Frequency.* The sample to be analyzed must pass through the measurement section of the analyzer without interruption. The detector must measure the sample concentration at least once every 15 seconds. An average emission rate must be computed and recorded at least once every 60 seconds.

4.9 *Hourly Rolling Average Calculation.* The CEMS must calculate every minute an hourly rolling average, which is the arithmetic mean of the 60 most recent 1-minute average values.

4.10 *Retest.* If the CEMS produces results within the specified criteria, the test is successful. If the CEMS does not meet one or more of the criteria, necessary corrections must be made and the performance tests repeated.

5. Performance Specification Test (PST) Periods

5.1 *Pretest Preparation Period.* Install the CEMS, prepare the PTM test site according to the specifications in section 3, and prepare the CEMS for operation and calibration according to the manufacturer's written instructions. A pretest conditioning period similar to that of the 7-day CD test is recommended to verify the operational status of the CEMS.

5.2 *Calibration Drift Test Period.* While the facility is operating under normal conditions, determine the magnitude of the CD at 24-hour intervals for seven consecutive days according to the procedure given in section 6.1. All CD determinations must be made following a 24-hour period during which no unscheduled maintenance, repair, or adjustment takes place. If the combustion unit is taken out of service during the test period, record the onset and duration of the downtime and continue the CD test when the unit resumes operation.

5.3 *Calibration Error Test and Response Time Test Periods.* Conduct the CE and response time tests during the CD test period.

6. Performance Specification Test Procedures

6.1 *Relative Accuracy Test Audit (RATA) and Absolute Calibration Audits (ACA).* The test procedures described in this section are in lieu of a RATA and ACA.

6.2 *Calibration Drift Test.*

6.2.1 *Sampling Strategy.* Conduct the CD test at 24-hour intervals for seven consecutive days using calibration gases at the two daily concentration levels specified in section 4.3. Introduce the two calibration gases

into the sampling system as close to the sampling probe outlet as practical. The gas must pass through all CEM components used during normal sampling. If periodic automatic or manual adjustments are made to the CEMS zero and calibration settings, conduct the CD test immediately before these adjustments, or conduct it in such a way that the CD can be determined. Record the CEMS response and subtract this value from the reference (calibration gas) value. To meet the specification, none of the differences may exceed 3 percent of the span of the CEM.

6.2.2 *Calculations.* Summarize the results on a data sheet. An example is shown in Figure 1. Calculate the differences between the CEMS responses and the reference values.

6.3 *Response Time.* The entire system including sample extraction and transport, sample conditioning, gas analyses, and the data recording is checked with this procedure.

6.3.1 Introduce the calibration gases at the probe as near to the sample location as possible. Introduce the zero gas into the system. When the system output has stabilized (no change greater than 1 percent of full scale for 30 sec), switch to monitor stack effluent and wait for a stable value. Record the time (upscale response time) required to reach 95 percent of the final stable value.

6.3.2 Next, introduce a high-level calibration gas and repeat the above procedure. Repeat the entire procedure three times and determine the mean upscale and downscale response times. The longer of the two means is the system response time.

6.4 *Calibration Error Test Procedure.*

6.4.1 *Sampling Strategy.* Challenge the CEMS with zero gas and EPA Protocol 1 cylinder gases at measurement points within the ranges specified in section 4.7.

6.4.1.1 The daily calibration gases, if Protocol 1, may be used for this test.

SOURCE:	DATE:
MONITOR:	LOCATION:
SERIAL NUMBER:	SPAN:

	DAY	DATE	TIME	CALIBRATION VALUE	MONITOR RESPONSE	DIFFE RENCE	PERCENT OF SPAN[1]
ZERO/ LOW LEVEL	1						
	2						
	3						
	4						
	5						
	6						
	7						
HIGH LEVEL	1						
	2						
	3						
	4						
	5						
	6						
	7						

1/ = Acceptance Criteria: ≤ 3% of span each day for seven days.

FIGURE 1: Calibration Drift Determination

6.4.1.2 Operate the CEMS as nearly as possible in its normal sampling mode. The calibration gas should be injected into the sampling system as close to the sampling probe outlet as practical and must pass through all filters, scrubbers, conditioners, and other monitor components used during normal sampling. Challenge the CEMS three nonconsecutive times at each measurement point and record the responses. The duration of each gas injection should be for a sufficient period of time to ensure that the CEMS surfaces are conditioned.

6.4.2 *Calculations.* Summarize the results on a data sheet. An example data sheet is shown in Figure 2. Average the differences between the instrument response and the certified cylinder gas value for each gas. Calculate three CE results according to Equation 1. No confidence coefficient is used in CE calculations.

7. Equations

Calibration Error. Calculate CE using Equation 1.

$$CE = |d/FS| \times 100 \qquad \text{(Eq. 1)}$$

Where:

d= Mean difference between CEMS response and the known reference concentration, determined using Equation 2.

$$d = \frac{1}{n}\sum_{i=1}^{n} d_i \qquad \text{(Eq. 2)}$$

Where:

d_i = Individual difference between CEMS response and the known reference concentration.

8. Reporting

At a minimum, summarize in tabular form the results of the CD, response time, and CE test, as appropriate. Include all data sheets, calculations, CEMS data records, and cylinder gas or reference material certifications.

SOURCE:	DATE:
MONITOR:	LOCATION:
SERIAL NUMBER:	SPAN:

RUN NUMBER	CALIBRATION VALUE	MONITOR RESPONSE	DIFFERENCE		
			Zero/Low	Mid	High
1 - Zero					
2 - Mid					
3 - High					
4 - Mid					
5 - Zero					
6 - High					
7 - Zero					
8 - Mid					
9 - High					
		Mean Difference =			
		Calibration Error =	%	%	%

FIGURE 2: Calibration Error Determination

9. References

1. Measurement of Volatile Organic Compounds-Guideline Series. U.S. Environmental Protection Agency, Research Triangle Park, North Carolina, 27711, EPA–450/2–78–041, June 1978.

2. Traceability Protocol for Establishing True Concentrations of Gases Used for Calibration and Audits of Continuous Source Emission Monitors (Protocol No. 1). U.S. Environmental Protection Agency ORD/EMSL, Research Triangle Park, North Carolina, 27711, June 1978.

3. Gasoline Vapor Emission Laboratory Evaluation-Part 2. U.S. Environmental Protection Agency, OAQPS, Research Triangle Park, North Carolina, 27711, EMB Report No. 76–GAS–6, August 1975.

PERFORMANCE SPECIFICATION 9—SPECIFICATIONS AND TEST PROCEDURES FOR GAS CHROMATOGRAPHIC CONTINUOUS EMISSION MONITORING SYSTEMS IN STATIONARY SOURCES

1. Applicability and Principle

1.1 Applicability. These requirements apply to continuous emission monitoring systems (CEMS) that use gas chromatography (GC) to measure gaseous organic compound emissions. The requirements include procedures intended to evaluate the acceptability of the CEMS at the time of its installation and whenever specified in regulations or permits. Quality assurance procedures for calibrating, maintaining, and operating the CEMS properly at all times are also given in this procedure.

1.2 Principle. Calibration precision, calibration error, and performance audit tests are conducted to determine conformance of the CEMS with these specifications. Daily calibration and maintenance requirements are also specified.

2. Definitions

2.1 Gas Chromatograph (GC). That portion of the system that separates and detects organic analytes and generates an output proportional to the gas concentration. The GC must be temperature controlled.

NOTE: The term ''temperature controlled'' refers to the ability to maintain a certain temperature around the column. Temperature-programmable GC is not required for this performance specification, as long as all other requirements for precision, linearity, and accuracy listed in this performance specification are met. It should be noted that temperature programming a GC will speed up peak elution, thus allowing increased sampling frequency.

2.1.1 Column. An analytical column capable of separating the analytes of interest.

2.1.2 Detector. A detection system capable of detecting and quantifying all analytes of interest.

2.1.3 Integrator. That portion of the system that quantifies the area under a particular sample peak generated by the GC.

2.1.4 Data Recorder. A strip chart recorder, computer, or digital recorder capable of recording all readings within the instrument's calibration range.

2.2 Calibration Precision. The error between triplicate injections of each calibration standard.

3. Installation and Measurement Location Specifications

Install the CEMS in a location where the measurements are representative of the source emissions. Consider other factors, such as ease of access for calibration and maintenance purposes. The location should not be close to air in-leakages. The sampling location should be at least two equivalent duct diameters downstream from the nearest control device, point of pollutant generation, or other point at which a change in the pollutant concentration or emission rate occurs. The location should be at least 0.5 diameter upstream from the exhaust or control device. To calculate equivalent duct diameter, see section 2.1 of Method 1 (40 CFR part 60, appendix A). Sampling locations not conforming to the requirements in this section may be used if necessary upon approval of the Administrator.

4. CEMS Performance and Equipment Specifications

4.1 Presurvey Sample Analysis and GC Selection. Determine the pollutants to be monitored from the applicable regulation or permit and determine the approximate concentration of each pollutant (this information can be based on past compliance test results). Select an appropriate GC configuration to measure the organic compounds. The GC components should include a heated sample injection loop (or other sample introduction systems), separatory column, temperature-controlled oven, and detector. If the source chooses dual column and/or dual detector configurations, each column/detector is considered a separate instrument for the purpose of this performance specification and thus the procedures in this performance specification shall be carried out on each system. If this method is applied in highly explosive areas, caution should be exercised in selecting the equipment and method of installation.

4.2 Sampling System. The sampling system shall be heat traced and maintained at a minimum of 120 °C with no cold spots. All system components shall be heated, including the probe, calibration valve, sample lines, sampling loop (or sample introduction system), GC oven, and the detector block (when appropriate for the type of detector being utilized, e.g., flame ionization detector).

4.3 Calibration Gases. Obtain three concentrations of calibration gases certified by the manufacturer to be accurate to within 2 percent of the value on the label. A gas dilution system may be used to prepare the calibration gases from a high concentration certified standard if the gas dilution system meets the requirements specified in Test Method 205, 40 CFR part 51, appendix M. The performance test specified in Test Method 205 shall be repeated quarterly, and the results of the Method 205 test shall be included in the report. The calibration gas concentration of each target analyte shall be as follows (measured concentration is based on the presurvey concentration determined in section 4.1).

NOTE: If the low level calibration gas concentration falls at or below the limit of detection for the instrument for any target pollutant, a calibration gas with a concentration at 4 to 5 times the limit of detection for the instrument may be substituted for the low-level calibration gas listed in section 4.3.1

4.3.1 Low-level. 40–60 percent of measured concentration.

4.3.2 Mid-level. 90–110 percent of measured concentration.

4.3.3 High-level. 140–160 percent of measured concentration, or select highest expected concentration.

4.4 Performance Audit Gas. A certified EPA audit gas shall be used, when possible. A Protocol 1 gas mixture containing all the target compounds within the calibration range may be used when EPA performance audit materials are not available. The instrument relative error shall be ≤10 percent of the certified value of the audit gas.

4.5 Calibration Error (CE). The CEMS must allow the determination of CE at all three calibration levels. The average CEMS calibration response must not differ by more than 10 percent of calibration gas value at each level after each 24-hour period of the initial test.

4.6 Calibration Precision and Linearity. For each triplicate injection at each concentration level for each target analyte, any one injection shall not deviate more than 5 percent from the average concentration measured at that level. The linear regression curve for each organic compound at all three levels shall have an $r^2 \geq 0.995$ (using Equation 1).

4.7 Measurement Frequency. The sample to be analyzed shall flow continuously through the sampling system. The sampling system time constant (T) shall be ≤5 minutes or the sampling frequency specified in the applicable regulation, whichever is less. Use Equation 3 to determine T. The analytical system shall be capable of measuring the effluent stream at the frequency specified in the appropriate regulation or permit.

5. Performance Specification Test (PST) Periods

5.1 Pretest Preparation Period. Using the procedures described in Method 18 (40 CFR part 60, appendix A), perform initial tests to determine GC conditions that provide good resolution and minimum analysis time for compounds of interest. Resolution interferences that may occur can be eliminated by appropriate GC column and detector choice or by shifting the retention times through changes in the column flow rate and the use of temperature programming.

5.2 7-Day CE Test Period. At the beginning of each 24-hour period, set the initial instrument setpoints by conducting a multipoint calibration for each compound. The multipoint calibration shall meet the requirements in section 4.7. Throughout the 24-hour period, sample and analyze the stack gas at the sampling intervals prescribed in the regulation or permit. At the end of the 24-hour period, inject the three calibration gases for each compound in triplicate and determine the average instrument response. Determine the CE for each pollutant at each level using the equation in section 6.2. Each CE shall be ≤10 percent. Repeat this procedure six more times for a total of 7 consecutive days.

5.3 Performance Audit Test Periods. Conduct the performance audit once during the initial 7-day CE test and quarterly thereafter. Sample and analyze the EPA audit gas(es) (or the Protocol 1 gas mixture if an EPA audit gas is not available) three times. Calculate the average instrument response. Report the audit results as part of the reporting requirements in the appropriate regulation or permit (if using a Protocol 1 gas mixture, report the certified cylinder concentration of each pollutant).

6. Equations

6.1 Coefficient of Determination. Calculate r^2 using linear regression analysis and the average concentrations obtained at three calibration points as shown in Equation 1.

$$r^2 = \left(\frac{n\Sigma x_i y_i - (\Sigma x_i)(\Sigma y_i)}{\sqrt{(n\Sigma y_i^2 - \Sigma y_i \Sigma y_i)(n\Sigma x_i^2 - \Sigma x_i \Sigma x_i)}} \right)^2 \qquad \text{Eq. 1}$$

Where:

r^2=Coefficient of determination.

n=Number of measurement points.

x=CEMS response.

y=Actual value of calibration standard.

6.2 Calibration Error Determination. Determine the percent calibration error (CE) at each concentration for each pollutant using the following equation.

$$CE = \frac{C_m - C_a}{C_a} \times 100 \qquad \text{(Eq. 2)}$$

where:

C_m=average instrument response, ppm.

C_a=cylinder gas value, ppm.

6.3 Sampling System Time Constant (T).

$$T = \frac{F}{V} \qquad \text{(Eq. 3)}$$

where:

F=Flow rate of stack gas through sampling system, in liters/min.

V=Sample system volume, in Liters, which is the volume inside the sample probe and tubing leading from the stack to the sampling loop.

7. Daily Calibration

7.1 Initial Multipoint Calibration. After initial startup of the GC, after routine maintenance or repair, or at least once per month, conduct a multipoint calibration of the GC for each target analyte. The multipoint calibration for each analyte shall meet the requirements in section 4.7.

7.2 Daily Calibration. Once every 24 hours, analyze the mid-level calibration standard for each analyte in triplicate. Calculate the average instrument response for each analyte. The average instrument response shall not vary more than 10 percent from the certified concentration value of the cylinder for each analyte. If the difference between the analyzer response and the cylinder concentration for any target compound is greater than 10 percent, immediately take corrective action on the instrument if necessary, and conduct an initial multipoint calibration as described in section 7.1.

8. Reporting

Follow the reporting requirements of the applicable regulation or permit. If the reporting requirements include the results of this performance specification, summarize in tabular form the results of the CE tests. Include all data sheets, calculations, CEMS data records, performance audit results, and calibration gas concentrations and certifications.

[48 FR 13327, Mar. 30, 1983 and 48 FR 23611, May 25, 1983, as amended at 48 FR 32986, July 20, 1983; 51 FR 31701, Aug. 5, 1985; 52 FR 17556, May 11, 1987; 52 FR 30675, Aug. 18, 1987; 52 FR 34650, Sept. 14, 1987; 53 FR 7515, Mar. 9, 1988; 53 FR 41335, Oct. 21, 1988; 55 FR 18876, May 7, 1990; 55 FR 40178, Oct. 2, 1990; 55 FR 47474, Nov. 14, 1990; 56 FR 5526, Feb. 11, 1991; 59 FR 64593, Dec. 15, 1994; 64 FR 53032, Sept. 30, 1999]

APPENDIX C TO PART 60—DETERMINATION OF EMISSION RATE CHANGE

1. *Introduction.*

1.1 The following method shall be used to determine whether a physical or operational change to an existing facility resulted in an increase in the emission rate to the atmosphere. The method used is the Student's *t* test, commonly used to make inferences from small samples.

2. *Data.*

2.1 Each emission test shall consist of *n* runs (usually three) which produce *n* emission rates. Thus two sets of emission rates are generated, one before and one after the change, the two sets being of equal size.

2.2 When using manual emission tests, except as provided in §60.8(b) of this part, the reference methods of appendix A to this part shall be used in accordance with the procedures specified in the applicable subpart both before and after the change to obtain the data.

2.3 When using continuous monitors, the facility shall be operated as if a manual emission test were being performed. Valid data using the averaging time which would be required if a manual emission test were being conducted shall be used.

3. *Procedure.*

3.1 Subscripts a and b denote prechange and postchange respectively.

3.2 Calculate the arithmetic mean emission rate, E, for each set of data using Equation 1.

$$E = \frac{\sum_{i=1}^{n} E_i}{n} = \frac{E_1 + E_2 \ldots + E_n}{n} \qquad (1)$$

Where:

E_i=Emission rate for the *i* th run.

n=number of runs.

3.3 Calculate the sample variance, S^2, for each set of data using Equation 2.

$$S^2 = \frac{\sum_{i=1}^{n} (E_i - E)^2}{n-1} = \frac{\sum_{i=1}^{n} E_i^2 - \left(\sum_{i=1}^{n} E_i\right)^2 / n}{n-1} \qquad (2)$$

3.4 Calculate the pooled estimate, S_p, using Equation 3.

$$S_p = \left[\frac{(n_a - 1)\ S_a^2 + (n_b - 1)\ S_b^2}{n_a + n_b - 2}\right]^{1/2} \qquad (3)$$

3.5 Calculate the test statistic, *t*, using Equation 4.

$$t = \frac{E_b - E_a}{S_p \left[\frac{1}{n_a} + \frac{1}{n_b}\right]^{1/2}} \qquad (4)$$

4. *Results.*

4.1 If $E_b > E_a$ and $t > t'$, where t' is the critical value of *t* obtained from Table 1, then with 95% confidence the difference between E_b and E_a is significant, and an increase in emission rate to the atmosphere has occurred.

TABLE 1

Degrees of freedom ($n_a = n_b - 2$)	t' (95 percent confidence level)
2	2.920
3	2.353
4	2.132
5	2.015
6	1.943
7	1.895
8	1.860

For greater than 8 degrees of freedom, see any standard statistical handbook or text.

5.1 Assume the two performance tests produced the following set of data:

Test a	Test b
Run 1. 100	115
Run 2. 95	120
Run 3. 110	125

5.2 Using Equation 1—

E_a=100+95+110/3=102

E_b=115+120+125/3=120

5.3 Using Equation 2—

$S_a2=(100-102)^2+(95-102)^2+(110-102)^2/3-1=58.5$

$S_b2=(115-120)^2+(120-120)^2+(125-120)^2/3-1=25$

5.4 Using Equation 3—

$S_p=[(3-1)(58.5)+(3+1)(25)/3+3-2]^{1/2}=6.46$

5.5 Using Equation 4—

$$t = \frac{120 - 102}{6.46\left[\frac{1}{3} + \frac{1}{3}\right]^{1/2}} = 3.412$$

5.6 Since $(n^1+n^2-2)=4$, $t'=2.132$ (from Table 1). Thus since $t>t'$ the difference in the values of E_a and E_b is significant, and there has been an increase in emission rate to the atmosphere.

6. *Continuous Monitoring Data.*

6.1 Hourly averages from continuous monitoring devices, where available, should be used as data points and the above procedure followed.

[40 FR 58420, Dec. 16, 1975]

APPENDIX D TO PART 60—REQUIRED EMISSION INVENTORY INFORMATION

(a) Completed NEDS point source form(s) for the entire plant containing the designated facility, including information on the applicable criteria pollutants. If data concerning the plant are already in NEDS, only that information must be submitted which is necessary to update the existing NEDS record for that plant. Plant and point identification codes for NEDS records shall correspond to those previously assigned in NEDS; for plants not in NEDS, these codes shall be obtained from the appropriate Regional Office.

(b) Accompanying the basic NEDS information shall be the following information on each designated facility:

(1) The state and county identification codes, as well as the complete plant and point identification codes of the designated facility in NEDS. (The codes are needed to match these data with the NEDS data.)

(2) A description of the designated facility including, where appropriate:

(i) Process name.

(ii) Description and quantity of each product (maximum per hour and average per year).

(iii) Description and quantity of raw materials handled for each product (maximum per hour and average per year).

(iv) Types of fuels burned, quantities and characteristics (maximum and average quantities per hour, average per year).

(v) Description and quantity of solid wastes generated (per year) and method of disposal.

(3) A description of the air pollution control equipment in use or proposed to control the designated pollutant, including:

(i) Verbal description of equipment.

(ii) Optimum control efficiency, in percent. This shall be a combined efficiency when more than one device operates in series. The method of control efficiency determination shall be indicated (e.g., design efficiency, measured efficiency, estimated efficiency).

(iii) Annual average control efficiency, in percent, taking into account control equipment down time. This shall be a combined efficiency when more than one device operates in series.

(4) An estimate of the designated pollutant emissions from the designated facility (maximum per hour and average per year). The method of emission determination shall also be specified (e.g., stack test, material balance, emission factor).

[40 FR 53349, Nov. 17, 1975]

APPENDIX E TO PART 60 [RESERVED]

APPENDIX F TO PART 60—QUALITY ASSURANCE PROCEDURES

PROCEDURE 1. QUALITY ASSURANCE REQUIREMENTS FOR GAS CONTINUOUS EMISSION MONITORING SYSTEMS USED FOR COMPLIANCE DETERMINATION

1. Applicability and Principle

1.1 Applicability. Procedure 1 is used to evaluate the effectiveness of quality control (QC) and quality assurance (QA) procedures and the quality of data produced by any continuous emission monitoring system (CEMS) that is used for determining compliance with the emission standards on a continuous basis as specified in the applicable regulation. The CEMS may include pollutant (e.g., $S0_2$ and $N0_x$) and diluent (e.g., 0_2 or $C0_2$) monitors.

This procedure specifies the minimum QA requirements necessary for the control and assessment of the quality of CEMS data submitted to the Environmental Protection Agency (EPA). Source owners and operators responsible for one or more CEMS's used for compliance monitoring must meet these minimum requirements and are encouraged to develop and implement a more extensive QA program or to continue such programs where they already exist.

Data collected as a result of QA and QC measures required in this procedure are to be submitted to the Agency. These data are to be used by both the Agency and the CEMS operator in assessing the effectiveness of the CEMS QC and QA procedures in the maintenance of acceptable CEMS operation and valid emission data.

Appendix F, Procedure 1 is applicable December 4, 1987. The first CEMS accuracy assessment shall be a relative accuracy test audit (RATA) (see section 5) and shall be completed by March 4, 1988 or the date of the initial performance test required by the applicable regulation, whichever is later.

1.2 Principle. The QA procedures consist of two distinct and equally important functions. One function is the assessment of the quality of the CEMS data by estimating accuracy. The other function is the control and improvement of the quality of the CEMS data by implementing QC policies and corrective actions. These two functions form a control loop: When the assessment function indicates that the data quality is inadequate, the control effort must be increased until the data quality is acceptable. In order to provide uniformity in the assessment and reporting of data quality, this procedure explicitly specifies the assessment methods for response drift and accuracy. The methods are based on procedures included in the applicable performance specifications (PS's) in appendix B of 40 CFR part 60. Procedure 1 also requires the analysis of the EPA audit samples concurrent with certain reference method (RM) analyses as specified in the applicable RM's.

Because the control and corrective action function encompasses a variety of policies, specifications, standards, and corrective measures, this procedure treats QC requirements in general terms to allow each source owner or operator to develop a QC system that is most effective and efficient for the circumstances.

2. Definitions

2.1 Continuous Emission Monitoring System. The total equipment required for the determination of a gas concentration or emission rate.

2.2 Diluent Gas. A major gaseous constituent in a gaseous pollutant mixture. For combustion sources, CO_2 and O_2 are the major gaseous constituents of interest.

2.3 Span Value. The upper limit of a gas concentration measurement range that is specified for affected source categories in the applicable subpart of the regulation.

2.4 Zero, Low-Level, and High-Level Values. The CEMS response values related to the source specific span value. Determination of zero, low-level, and high-level values is defined in the appropriate PS in appendix B of this part.

2.5 Calibration Drift (CD). The difference in the CEMS output reading from a reference value after a period of operation during which no unscheduled maintenance, repair or adjustment took place. The reference value may be supplied by a cylinder gas, gas cell, or optical filter and need not be certified.

2.6 Relative Accuracy (RA). The absolute mean difference between the gas concentration or emission rate determined by the

CEMS and the value determined by the RM's plus the 2.5 percent error confidence coefficient of a series of tests divided by the mean of the RM tests or the applicable emission limit.

3. QC Requirements

Each source owner or operator must develop and implement a QC program. As a minimum, each QC program must include written procedures which should describe in detail, complete, step-by-step procedures and operations for each of the following activities:

1. Calibration of CEMS.
2. CD determination and adjustment of CEMS.
3. Preventive maintenance of CEMS (including spare parts inventory).
4. Data recording, calculations, and reporting.
5. Accuracy audit procedures including sampling and analysis methods.
6. Program of corrective action for malfunctioning CEMS.

As described in Section 5.2, whenever excessive inaccuracies occur for two consecutive quarters, the source owner or operator must revise the current written procedures or modify or replace the CEMS to correct the deficiency causing the excessive inaccuracies.

These written procedures must be kept on record and available for inspection by the enforcement agency.

4. CD Assessment

4.1 CD Requirement. As described in 40 CFR 60.13(d), source owners and operators of CEMS must check, record, and quantify the CD at two concentration values at least once daily (approximately 24 hours) in accordance with the method prescribed by the manufacturer. The CEMS calibration must, as minimum, be adjusted whenever the daily zero (or low-level) CD or the daily high-level CD exceeds two times the limits of the applicable PS's in appendix B of this regulation.

4.2 Recording Requirement for Automatic CD Adjusting Monitors. Monitors that automatically adjust the data to the corrected calibration values (e.g., microprocessor control) must be programmed to record the unadjusted concentration measured in the CD prior to resetting the calibration, if performed, or record the amount of adjustment.

4.3 Criteria for Excessive CD. If either the zero (or low-level) or high-level CD result exceeds twice the applicable drift specification in appendix B for five, consecutive, daily periods, the CEMS is out-of-control. If either the zero (or low-level) or high-level CD result exceeds four times the applicable drift specification in appendix B during any CD check, the CEMS is out-of-control. If the CEMS is out-of-control, take necessary corrective action. Following corrective action, repeat the CD checks.

4.3.1 Out-Of-Control Period Definition. The beginning of the out-of-control period is the time corresponding to the completion of the fifth, consecutive, daily CD check with a CD in excess of two times the allowable limit, or the time corresponding to the completion of the daily CD check preceding the daily CD check that results in a CD in excess of four times the allowable limit. The end of the out-of-control period is the time corresponding to the completion of the CD check following corrective action that results in the CD's at both the zero (or low-level) and high-level measurement points being within the corresponding allowable CD limit (i.e., either two times or four times the allowable limit in appendix B).

4.3.2 CEMS Data Status During Out-of-Control Period. During the period the CEMS is out-of-control, the CEMS data may not be used in calculating emission compliance nor be counted towards meeting minimum data availability as required and described in the applicable subpart [e.g., §60.47a(f)].

4.4 Data Recording and Reporting. As required in §60.7(d) of this regulation (40 CFR part 60), all measurements from the CEMS must be retained on file by the source owner for at least 2 years. However, emission data obtained on each successive day while the CEMS is out-of-control may not be included as part of the minimum daily data requirement of the applicable subpart [e.g., §60.47a(f)] nor be used in the calculation of reported emissions for that period.

5. Data Accuracy Assessment

5.1 Auditing Requirements. Each CEMS must be audited at least once each calendar quarter. Successive quarterly audits shall occur no closer than 2 months. The audits shall be conducted as follows:

5.1.1 Relative Accuracy Test Audit (RATA). The RATA must be conducted at least once every four calendar quarters. Conduct the RATA as described for the RA test procedure in the applicable PS in appendix B (e.g., PS 2 for SO_2 and NO_X). In addition, analyze the appropriate performance audit samples received from EPA as described in the applicable sampling methods (e.g., Methods 6 and 7).

5.1.2 Cylinder Gas Audit (CGA). If applicable, a CGA may be conducted in three of four calendar quarters, but in no more than three quarters in succession.

To conduct a CGA: (1) Challenge the CEMS (both pollutant and diluent portions of the CEMS, if applicable) with an audit gas of known concentration at two points within the following ranges:

Audit point	Audit range		
	Pollutant monitors	Diluent monitors for—	
		CO_2	O_2
1	20 to 30% of span value.	5 to 8% by volume.	4 to 6% by volume.
2	50 to 60% of span value.	10 to 14% by volume.	8 to 12% by volume.

Challenge the CEMS three times at each audit point, and use the average of the three responses in determining accuracy.

Use of separate audit gas cylinder for audit points 1 and 2. Do not dilute gas from audit cylinder when challenging the CEMS.

The monitor should be challenged at each audit point for a sufficient period of time to assure adsorption-desorption of the CEMS sample transport surfaces has stabilized.

(2) Operate each monitor in its normal sampling mode, i.e., pass the audit gas through all filters, scrubbers, conditioners, and other monitor components used during normal sampling, and as much of the sampling probe as is practical. At a minimum, the audit gas should be introduced at the connection between the probe and the sample line.

(3) Use audit gases that have been certified by comparision to National Bureau of Standards (NBS) gaseous Standard Reference Materials (SRM's) or NBS/EPA approved gas manufacturer's Certified Reference Materials (CRM's) (See Citation 1) following EPA Traceability Protocol No. 1 (See Citation 2). As an alternative to Protocol No. 1 audit gases, CRM's may be used directly as audit gases. A list of gas manufacturers that have prepared approved CRM's is available from EPA at the address shown in Citation 1. Procedures for preparation of CRM's are described in Citation 1. Procedures for preparation of EPA Traceability Protocol 1 materials are described in Citation 2.

The difference between the actual concentration of the audit gas and the concentration indicated by the monitor is used to assess the accuracy of the CEMS.

5.1.3 Relative Accuracy Audit (RAA). The RAA may be conducted three of four calendar quarters, but in no more than three quarters in succession. To conduct a RAA, follow the procedure described in the applicable PS in appendix B for the relative accuracy test, except that only three sets of measurement data are required. Analyses of EPA performance audit samples are also required.

The relative difference between the mean of the RM values and the mean of the CEMS responses will be used to assess the accuracy of the CEMS.

5.1.4 Other Alternative Audits. Other alternative audit procedures may be used as approved by the Administrator for three of four calendar quarters. One RATA is required at least once every four calendar quarters.

5.2 Excessive Audit Inaccuracy. If the RA, using the RATA, CGA, or RAA exceeds the criteria in section 5.2.3, the CEMS is out-of-control. If the CEMS is out-of-control, take necessary corrective action to eliminate the problem. Following corrective action, the source owner or operator must audit the CEMS with a RATA, CGA, or RAA to determine if the CEMS is operating within the specifications. A RATA must always be used following an out-of-control period resulting from a RATA. The audit following corrective action does not require analysis of EPA performance audit samples. If audit results show the CEMS to be out-of-control, the CEMS operator shall report both the audit showing the CEMS to be out-of-control and the results of the audit following corrective action showing the CEMS to be operating within specifications.

5.2.1 Out-Of-Control Period Definition. The beginning of the out-of-control period is the time corresponding to the completion of the sampling for the RATA, RAA, or CGA. The end of the out-of-control period is the time corresponding to the completion of the sampling of the subsequent successful audit.

5.2.2 CEMS Data Status During Out-Of-Control Period. During the period the monitor is out-of-control, the CEMS data may not be used in calculating emission compliance nor be counted towards meeting minimum data availabilty as required and described in the applicable subpart [e.g., §60.47a(f)].

5.2.3 Criteria for Excessive Audit Inaccuracy. Unless specified otherwise in the applicable subpart, the criteria for excessive inaccuracy are:

(1) For the RATA, the allowable RA in the applicable PS in appendix B.

(2) For the CGA, ±15 percent of the average audit value or ±5 ppm, whichever is greater.

(3) For the RAA, ±15 percent of the three run average or ±7.5 percent of the applicable standard, whichever is greater.

5.3 Criteria for Acceptable QC Procedure. Repeated excessive inaccuracies (i.e., out-of-control conditions resulting from the quarterly audits) indicates the QC procedures are inadequate or that the CEMS is incapable of providing quality data. Therefore, whenever excessive inaccuracies occur for two consective quarters, the source owner or operator must revise the QC procedures (see Section 3) or modify or replace the CEMS.

6. *Calculations for CEMS Data Accuracy*

6.1 RATA RA Calculation. Follow the equations described in Section 8 of appendix B, PS 2 to calculate the RA for the RATA. The RATA must be calculated in units of the applicable emission standard (e.g., ng/J).

6.2 RAA Accuracy Calculation. Use Equation 1–1 to calculate the accuracy for the RAA. The RAA must be calculated in units

of the applicable emission standard (e.g., ng/J).

6.3 CGA Accuracy Calculation. Use Equation 1–1 to calculate the accuracy for the CGA, which is calculated in units of the appropriate concentration (e.g., ppm SO_2 or percent O_2). Each component of the CEMS must meet the acceptable accuracy requirement.

$$A = \frac{C_m - C_a}{C_a} \times 100 \qquad \text{Eq. 1-1}$$

where:

A = Accuracy of the CEMS, percent.

C_m = Average CEMS response during audit in units of applicable standard or appropriate concentration.

C_a = Average audit value (CGA certified value or three-run average for RAA) in units of applicable standard or appropriate concentration.

6.4 Example Accuracy Calculations. Example calculations for the RATA, RAA, and CGA are available in Citation 3.

7. *Reporting Requirements*

At the reporting interval specified in the applicable regulation, report for each CEMS the accuracy results from Section 6 and the CD assessment results from Section 4. Report the drift and accuracy information as a Data Assessment Report (DAR), and include one copy of this DAR for each quarterly audit with the report of emissions required under the applicable subparts of this part.

As a minimum, the DAR must contain the following information:

1. Source owner or operator name and address.

2. Identification and location of monitors in the CEMS.

3. Manufacturer and model number of each monitor in the CEMS.

4. Assessment of CEMS data accuracy and date of assessment as determined by a RATA, RAA, or CGA described in Section 5 including the RA for the RATA, the A for the RAA or CGA, the RM results, the cylinder gases certified values, the CEMS responses, and the calculations results as defined in Section 6. If the accuracy audit results show the CEMS to be out-of-control, the CEMS operator shall report both the audit results showing the CEMS to be out-of-control and the results of the audit following corrective action showing the CEMS to be operating within specifications.

5. Results from EPA performance audit samples described in Section 5 and the applicable RM's.

6. Summary of all corrective actions taken when CEMS was determined out-of-control, as described in Sections 4 and 5.

An example of a DAR format is shown in Figure 1.

8. *Bibliography*

1. ''A Procedure for Establishing Traceability of Gas Mixtures to Certain National Bureau of Standards Standard Reference Materials.'' Joint publication by NBS and EPA–600/7–81–010. Available from the U.S. Environmental Protection Agency. Quality Assurance Division (MD–77). Research Triangle Park, NC 27711.

2. ''Traceability Protocol for Establishing True Concentrations of Gases Used for Calibration and Audits of Continuous Source Emission Monitors (Protocol Number 1)'' June 1978. Section 3.0.4 of the Quality Assurance Handbook for Air Pollution Measurement Systems. Volume III. Stationary Source Specific Methods. EPA–600/4–77–027b. August 1977. U.S. Environmental Protection Agency. Office of Research and Development Publications, 26 West St. Clair Street, Cincinnati, OH 45268.

3. Calculation and Interpretation of Accuracy for Continuous Emission Monitoring Systems (CEMS). Section 3.0.7 of the Quality Assurance Handbook for Air Pollution Measurement Systems, Volume III, Stationary Source Specific Methods. EPA–600/4–77–027b. August 1977. U.S. Environmental Protection Agency. Office of Research and Development Publications, 26 West St. Clair Street, Cincinnati, OH 45268.

FIGURE 1—EXAMPLE FORMAT FOR DATA ASSESSMENT REPORT

Period ending date
Year
Company name
Plant name
Source unit no.
CEMS manufacturer
Model no.
CEMS serial no.
CEMS type (e.g., in situ)
CEMS sampling location (e.g., control device outlet)
CEMS span values as per the applicable regulation: (e.g., SO_2 ppm, NO_x ppm).

I. Accuracy assessment results (Complete A, B, or C below for each CEMS or for each pollutant and diluent analyzer, as applicable.) If the quarterly audit results show the CEMS to be out-of-control, report the results of both the quarterly audit and the audit following corrective action showing the CEMS to be operating properly.

A. Relative accuracy test audit (RATA) for (e.g., SO_2 in ng/J).

1. Date of audit .

2. Reference methods (RM's) used (e.g., Methods 3 and 6).

3. Average RM value (e.g., ng/J, mg/dsm^3, or percent volume).

4. Average CEMS value .

5. Absolute value of mean difference [d] .

6. Confidence coefficient [CC] .

7. Percent relative accuracy (RA) percent.

8. EPA performance audit results:

a. Audit lot number (1) (2)

b. Audit sample number (1) (2)

c. Results (mg/dsm^3) (1) (2)

d. Actual value (mg/dsm^3)* (1) (2)

e. Relative error* (1) (2)

B. Cylinder gas audit (CGA) for (e.g., SO_2 in ppm).

	Audit point 1	Audit point 2	
1. Date of audit	.....	.....	
2. Cylinder ID number	.....	.....	
3. Date of certification	.....	.....	
4. Type of certification	.....	.....	(e.g., EPA Protocol 1 or CRM).
5. Certified audit value	.....	.....	(e.g., ppm).
6. CEMS response value	.....	.....	(e.g., ppm).
7. Accuracy	.....	.....	percent.

C. Relative accuracy audit (RAA) for (e.g., SO_2 in ng/J).

1. Date of audit .

2. Reference methods (RM's) used (e.g., Methods 3 and 6).

3. Average RM value (e.g., ng/J).

4. Average CEMS value .

5. Accuracy percent.

6. EPA performance audit results:

a. Audit lot number (1) (2)

b. Audit sample number (1) (2)

c. Results (mg/dsm^3) (1) (2)

d. Actual value (mg/dsm^3) *(1) (2)

e. Relative error* (1) (2)

D. Corrective action for excessive inaccuracy.

1. Out-of-control periods.

a. Date(s) .

b. Number of days .

2. Corrective action taken

3. Results of audit following corrective action. (Use format of A, B, or C above, as applicable.)

II. Calibration drift assessment.

A. Out-of-control periods.

1. Date(s) .

2. Number of days .

B. Corrective action taken

—

[52 FR 21008, June 4, 1987; 52 FR 27612, July 22, 1987, as amended at 56 FR 5527, Feb. 11, 1991]

*To be completed by the Agency.

APPENDIX G TO PART 60—PROVISIONS FOR AN ALTERNATIVE METHOD OF DEMONSTRATING COMPLIANCE WITH 40 CFR 60.43 FOR THE NEWTON POWER STATION OF CENTRAL ILLINOIS PUBLIC SERVICE COMPANY

1. *Designation of Affected Facilities*

1.1 The affected facilities to which this alternative compliance method applies are the Unit 1 and 2 coal-fired steam generating units located at the Central Illinois Public Service Company's (CIPS) Newton Power Station in Jasper County, Illinois. Each of these units is subject to the Standards of Performance for Fossil-Fuel-Fired Steam Generators for Which Construction Commenced After August 17, 1971 (subpart D).

2. *Definitions*

2.1 All definitions in subparts D and Da of part 60 apply to this provision except that:

24-hour period means the period of time between 12:00 midnight and the following midnight.

Boiler operating day means a 24-hour period during which any fossil is combusted in either the Unit 1 or Unit 2 steam generating unit and during which the provisions of §60.43(e) are applicable.

CEMs means continuous emission monitoring system.

Coal bunker means a single or group of coal trailers, hoppers, silos or other containers that:

(1) are physically attached to the affected facility; and

(2) provide coal to the coal pulverizers.

DAFGDS means the dual alkali flue gas desulfurization system for the Newton Unit 1 steam generating unit.

3. *Compliance Provisions*

3.1 If the owner or operator of the affected facility elects to comply with the 470 ng/J (1.1 lbs/MMBTU) of combined heat input emission limit under §60.43(e), he shall notify the Regional Administrator, of the United States Environmental Protection Agency (USEPA), Region 5 and the Director, of the Illinois Environmental Protection Agency (IEPA) at least 30 days in advance of the date such election is to take effect, stating the date such operation is to commence. When the owner or operator elects to comply with this limit after one or more periods of reverting to the 520 ng/J heat input (1.2 lbs/MMBTU) limit of §60.43(a)(2), as provided under 3.4, he shall notify the Regional Administrator of the USEPA, Region 5 and the Director of the (IEPA) in writing at least ten (10) days in advance of the date such election is to take effect.

3.2 Compliance with the sulfur dioxide emission limit under §60.43(e) is determined on a continuous basis by performance testing using CEMs. Within 60 days after the initial operation of Units 1 and 2 subject to the

combined emission limit in §60.43(e), the owner or operator shall conduct an initial performance test, as required by §60.8, to determine compliance with the combined emission limit. This initial performance test is to be scheduled so that the thirtieth boiler operating day of the 30 successive boiler operating days is completed within 60 days after initial operation subject to the 470 ng/J (1.1 lbs/MMBTU) combined emission limit. Following the initial performance test, a separate performance test is completed at the end of each boiler operating day Unit 1 and Unit 2 are subject to §60.43(e), and a new 30 day average emission rate calculated.

3.2.1 Following the initial performance test, a new 30 day average emission rate is calculated for each boiler operating day the affected facility is subject to §60.43(e). If the owner or operator of the affected facility elects to comply with §60.43(e) after one or more periods of reverting to the 520 ng/J heat input (1.2 lbs/MMBTU) limit under §60.43(a)(2), as provided under 3.4, the 30 day average emission rate under §60.43(e) is calculated using emissions data of the current boiler operating day and data for the previous 29 boiler operating days when the affected facility was subject to §60.43(e). Periods of operation of the affected facility under §60.43(a)(2) are not considered boiler operating days. Emissions data collected during operation under §60.43(a)(2) are not considered relative to 4.6 and emissions data are not included in calculations of emission under §60.43(e).

3.2.2 When the affected facility is operated under the provisions of §60.43(e), the Unit 1 DAFGDS bypass damper must be fully closed. The DAFGDS bypass may be opened only during periods of DAFGDS startup, shutdown, malfunction or testing as described under Sections 3.5.1, 3.5.2, 3.5.3, 3.5.4, and 4.8.2.

3.3 Compliance with the sulfur dioxide emission limit set forth in §60.43(e) is based on the average combined hourly emission rate from Units 1 and 2 for 30 successive boiler operating days determined as follows:

$$E30 = \frac{1}{n}\sum_{i=1}^{n} EC(i)$$

where:

n=the number of available hourly combined emission rate values in the 30 successive boiler operating day period where Unit 1 and Unit 2 are subject to §60.43(e).

E30=average emission rate for 30 successive boiler operating days where Unit 1 and Unit 2 are subject to §60.43(e).

EC=the hourly combined emission rate from Units 1 and 2, in ng/J or lbs/MMBTU.

3.3.1 The average hourly combined emission rate for Units 1 and 2for each hour of operation of either Unit 1 or 2, or both, is determined as follows:

EC=[(E1)+(E2)]/[H1+H2]

where:

EC=the hourly combined SO_2 emission rate, lbs/MMBTU, from Units 1 and 2 when Units 1 and 2 are subject to §60.43(e).

E1=the hourly SO_2 mass emission, lb/hr, from Unit 1 as determined from CEMs data using the calculation procedures in section 4 of this appendix.

E2=the hourly SO_2 mass emission, lb/hr, from Unit 2 as determined from CEMs data using the calculation procedures in section 4 of this appendix.

H1=the hourly heat input, MMBTU/HR to Unit 1 as determined in section 4 of this appendix.

H2=the hourly heat input, MMBTU/HR, to Unit 2 as determined by section 4 of this appendix.

3.3.2 If data for any of the four hourly parameters (E1, E2, H1and H2, under 3.3.1 are unavailable during an hourly period, the combined emission rate (EC) is not calculated and the period is counted as missing data under 4.6.1., except as provided under 3.5. and 4.4.2.

3.4 After the date of initial operation subject to the combined emission limit, Units 1 and 2 shall remain subject to the combined emission limit and the owner or operator shall remain subject to the requirements of this Appendix until the initial performance test as required by 3.2 is completed and the owner or operator of the affected facility elects and provides notice to revert on a certain date to the 520 ng/J heat input (1.2 lbs/MMBTU) limit of §60.43(a)(2) applicable separately at each unit. The Regional Administrator of the USEPA, Region 5 and the Director, of the IEPA shall be given written notification from CIPS as soon as possible of CIPs' decision to revert to the 520 ng/J heat input (1.2 lbs/MMBTU) limit of §60.43(a)(2) separately at each unit, but no later than 10 days in advance of the date such election is to take effect.

3.5 Emission monitoring data for Unit 1 may be excluded from calculations of the 30 day rolling average only during the following times:

3.5.1 Periods of DAFGDS startup.

3.5.2 Periods of DAFGDS shutdown.

3.5.3 Periods of DAFGDS malfunction during system emergencies as defined in §60.41a.

3.5.4 The first 250 hours per calendar year of DAFGDS malfunctions of Unit 1 DAFGDS provided that efforts are made to minimize emissions from Unit 1 in accordance with §60.11(d), and if, after 16 hours but not more than 24 hours of DAFGDS malfunction, the owner or operator of the affected facility begins (following the customary loading procedures) loading into the Unit 1 coal bunker, coal with a potential SO_2 emission rate equal

to or less than the emission rate of Unit 2 recorded at the beginning of the DAFGDS malfunction. Malfunction periods under 3.5.3 are not counted toward the 250 hour/yr limit under this section.

3.5.4.1 The malfunction exemption in 3.5.4 is limited to the first 250 hours per calendar year of DAFGDS malfunction.

3.5.4.2 For malfunctions of the DAFGDS after the 250 hours per calendar year limit (cumulative), other than those defined in 3.5.3, the owner or operator of the affected facility shall combust lower sulfur coal or use any other method to comply with the 470 ng/J (1.1 lbs/MMBTU) combined emission limit.

3.5.4.3 During the first 250 hours of DAFGDS malfunction per year or during periods of DAFGDS startup, or DAFGDS shutdown, CEMs emissions data from Unit 2 shall continue to be included in the daily calculation of the combined 30 day rolling average emission rate; that is, the load on Unit 1 is assumed to be zero (H1 and E1=O; EC=E2/H2).

3.5.5—3.5.7 [Reserved]

3.6 The provision for excluding CEMs data from Unit 1 during the first 250 hours of DAFGDS malfunctions from combined hourly emissions calculations supersedes the provisions of §60.11(d). However, the general purpose contained in §60.11(d) (i.e., following good control practices to minimize air pollution emission during malfunctions) has not been superseded.

4. Continuous Emission Monitoring

4.1 The CEMs required under Section 3.2 are operated and data are recorded for all periods of operation of the affected facility including periods of the DAFGDS startup, shutdown and malfunction except for CEMs breakdowns, repairs, calibration checks, and zero and span adjustment. All provisions of §60.45 apply except as follows:

4.2 The owner or operator shall install, calibrate, maintain, and operate CEMs and monitoring devices for measuring the following:

4.2.1 For Unit 1:

4.2.1.1 Sulfur dioxide, oxygen or carbon dioxide, and volumetric flow rate for the Unit 1 DAFGDS stack.

4.2.1.2 Sulfur dioxide, oxygen or carbon dioxide, and volumetric flow rate for the Unit 1 DAFGDS bypass stack.

4.2.1.3 Moisture content of the flue gas must be determined continuously for the Unit 1 DAFGDS stack and the Unit 1 DAFGDS bypass stack, if the sulfur dioxide concentration in each stack is measured on a dry basis.

4.2.2 For Unit 2, sulfur dioxide, oxygen or carbon dioxide, and volumetric flow rate.

4.2.2.1 Moisture content of the flue gas must be determined continuously for the Unit 2 stack, if the sulfur dioxide concentration in the stack is measured on a dry basis.

4.2.3 For Units 1 and 2, the hourly heat input, the hourly steam production rate, or the hourly gross electrical power output from each unit.

4.3 For the Unit 1 bypass stack and the Unit 2 stack, the span value of the sulfur dioxide analyzer shall be equivalent to 200 percent of the maximum estimated hourly potential sulfur dioxide emissions of the fuel fired in parts per million sulfur dioxide. For the Unit 1 DAFGDS stack, the span value of the sulfur dioxide analyzer shall be equivalent to 100 percent of the maximum estimated hourly potential emissions of the fuel fired in parts per million sulfur dioxide. The span value for volumetric flow monitors shall be equivalent to 125 percent of the maximum estimated hourly flow in standard cubic meters/minute (standard cubic feet per minute). The span value of the continuous moisture monitors, if required by 4.2.1.3 and 4.2.2.1, shall be equivalent to 100 percent by volume. The span value of the oxygen or carbon dioxide analyzers shall be equivalent to 25 percent by volume.

4.3.1—4.3.2 [Reserved]

4.4 The monitoring devices required in 4.2 shall be installed, calibrated, and maintained as follows:

4.4.1 Each volumetric flow rate monitoring device specified in 4.2 shall be installed at approximately the same location as the sulfur dioxide emission monitoring sample location.

4.4.2 Hourly steam production rate and hourly electrical power output monitoring devices for Unit 1 and Unit 2 shall be calibrated and maintained according to manufacturer's specifications. The data from either of these devices may be used in the calculation of the combined emission rate in Section 3.3.1, only when the hourly heat input for Unit 1 (H1) or the hourly heat input for Unit 2 (H2) cannot be determined from CEM data, and the hourly heat input to steam production or hourly heat input to electrical power output efficiency over a given segment of each boiler or generator operating range, respectively, varies by less than 5 percent within the specified operating range, or the efficiencies of the boiler/generator units differ by less than 5 percent. The hourly heat input for Unit 1 (H1) or the hourly heat input for Unit 2 (H2) in Section 3.3.1 may also be calculated based on the fuel firing rates and fuel analysis.

4.4.3—4.4.5 [Reserved]

4.5 The hourly mass emissions from Unit 1 (E1) and Unit 2 (E2) and the hourly heat inputs from Unit 1 (H1) and Unit 2 (H2) used to determine the hourly combined emission rate for Units 1 and 2 (EC) in Section 3.3.1 are calculated using CEM data for each respective stack as follows:

4.5.1 The hourly SO_2 mass emission from each respective stack is determined as follows:

E=(C) (F) (D) (K)

Where:

E=SO_2 mass emission from the respective stack in lb per hour

C=SO_2 concentration from the respective stack ppm

F=flue gas flow rate from the respective stack in scfm

D=density of SO_2 in lb per standard cubic feet

K=time conversion, 60 mins./hr

4.5.2 The hourly heat input from each respective stack is determined as follows:

H=[(F) (C) (K)/(F_c)

where:

H=heat input from the respective stack in MMBTU per hour

C=CO_2 or O_2 concentration from the respective stack as a decimal

F=flue gas flow rate from the respective stack in scfm

K=time conversion, 60 mins./hr

F_c=fuel constant for the appropriate diluent in scf/MMBTU as per §§60.45(f) (4) and (5)

4.5.3 The hourly SO_2 mass emission for Unit 1 in pounds per hour (E1) is calculated as follows, when leakage or diversion of any DAFGDS inlet gas to the bypass stack occurs:

E1=(EF)+(EB)

Where:

EF=Hourly SO_2 mass emission measured in DAFGDS stack, lb/hr, using the calculation in Section 4.5.1.

EB=Hourly SO_2 mass emission measured in bypass stack, lb/hr, using the calculation in Section 4.5.1.

Other than during conditions under 3.5.1, 3.5.2, 3.5.3, 3.5.4, or 4.8.2, the DAFGDS bypass damper must be fully closed and any leakage will be indicated by the bypass stack volumetric flow and SO_2 measurements, and when no leakage through the bypass damper is indicated:

E1=EF

4.5.4 The hourly heat input for Unit 1 in MMBTU per hour (H1) is calculated as follows, when leakage or diversion of any DAFGDS inlet gas to the bypass stack occurs:

H1=(HF)+(HB)

where:

HF=Hourly heat input as determined from the DAFGDS stack CEMs, in MMBTU per hour, using the calculation in Section 4.5.2

HB=Hourly heat input as determined from the DAFGDS bypass stack CEMs, in MMBTU per hour, using the calculation in Section 4.5.2

4.6 For the CEMs required for Unit 1 and Unit 2, the owner or operator of the affected facility shall maintain and operate the CEMs and obtain combined emission data values (EC) for at least 75 percent of the boiler operting hours per day for at least 26 out of each 30 successive boiler operating days.

4.6.1 When hourly SO_2 emission data are not obtained by the CEMs because of CEMs breakdowns, repairs, calibration checks and zero and span adjustment, hourly emission data required by 4.6 are obtained by using Methods 6 or 6C and 3 or 3A, 6A, or 8 and 3, or by other alternative methods approved by the Regional Administrator of the USEPA, Region 5 and the Director, of the IEPA. Failure to obtain the minimum data requirements of 4.6 by CEMs, or by CEMs supplemented with alternative methods of this section, is a violation of performance testing requirements.

4.6.2 Independent of complying with the minimum data requirements of 4.6, all valid emissions data collected are used to calculate combined hourly emission rates (EC) and 30-day rolling average emission rates (E30) are calculated and used to judge compliance with 60.43(e).

4.7 For each continuous emission monitoring system, a quality control plan shall be prepared by CIPS and submitted to the Regional Administrator of the USEPA, Region 5 and the Director, of the IEPA. The plan is to be submitted to the Regional Administrator of the USEPA, Region 5 and the Director, of the IEPA 45 days before initiation of the initial performance test. At a minimum, the plan shall contain the following quality control elements:

4.7.1 Calibration of continuous emission monitoring systems (CEMs) and volumetric flow measurement devices.

4.7.2 Calibration drift determination and adjustment of CEMs and volumetric flow measurement devices.

4.7.3 Periodic CEMs, volumetric flow measurement devices and relative accuracy determinations.

4.7.4 Preventive maintenance of CEMs and volumetric flow measurement devices (including spare parts inventory).

4.7.5 Data recording and reporting.

4.7.6 Program of corrective action for malfunctioning CEMs and volumetric flow measurement devices.

4.7.7 Criteria for determining when the CEMs and volumetric flow measurement devices are not producing valid data.

4.7.8 Calibration and periodic checks of monitoring devices identified in 4.4.2.

4.8 For the purpose of conducting the continuous emission monitoring system performance specification tests as required by §60.13 and appendix B, the following conditions apply:

4.8.1 The calibration drift specification of Performance Specification 2, appendix B shall be determined separately for each of the Unit 1 SO_2 CEMs and the Unit 2 SO_2 CEMs. The calibration drift specification of Performance Specification 3, appendix B

shall be determined separately for each of the Unit 1 diluent CEMs and Unit 2 diluent CEMs.

4.8.2 The relative accuracy of the combined SO_2 emission rate for Unit 1 and Unit 2, as calculated from CEMs and volumetric flow data using the procedures in 3.3.1, 4.5.1, 4.5.2 and 4.5.3 shall be no greater than 20 percent of the mean value of the combined emission rate, as determined from testing conducted simultaneously on the DAFGDS stack, the DAFGDS bypass stack and the Unit 2 stack using reference methods 2, 3, or 3A and 6 or 6C, or shall be no greater than 10 percent of the emission limit in §60.43(e), whichever criteria is less stringent. The relative accuracy shall be computed from at least nine comparisons of the combined emission rate values using the procedures in section 7 and the equations in section 8, Performance Specification 2, appendix B. Throughout, but only during, the relative accuracy test period the DAFGDS bypass damper shall be partially opened such that there is a detectable flow.

4.8.3—4.8.3.4 [Reserved]

4.9 The total monitoring system required by 4.2 shall be subject only to an annual relative accuracy test audit (RATA) in accordance with the quality assurance requirements of section 5.1.1 of 40 CFR part 60, appendix F. Each SO_2 and diluent CEMs shall be subject to cylinder gas audits (OGA) in accordance with the quality assurance requirements of section 5.1.2 of appendix F with the exception that any SO_2 or diluent CEMs without any type of probe or sample line shall be exempt from the OGA requirements.

5. Recordkeeping Requirements

5.1 The plant owner or operator shall keep a record of each hourly emission rate, each hourly SO_2 CEMs value and hourly flow rate value, and each hourly Btu heat input rate, hourly steam rate, or hourly electrical power output, and a record of each hourly weighted average emission rate. These records shall be kept for all periods of operation of Unit 1 or 2 under provisions of §60.43(e), including operations of Unit 1 (E1) during periods of DAFGDS startup, shutdown, and malfunction when H1 and E1 are assumed to be zero (0) (see 4.5).

5.2 The plant owner or operator shall keep a record of each hourly gas flow rate through the DAFGDS stack, each hourly stack gas flow rate through the bypass stack during any periods that the DAFGDS bypass damper is opened or flow is indicated, and reason for bypass operation.

6. Reporting Requirements

6.1 The owner or operator of any affected facility shall submit the written reports required under 6.2 of this section and subpart A to the Regional Administrator of the USEPA, Region 5 and the Director, of the IEPA for every calendar quarter. All quarterly reports shall be submitted by the 30th day following the end of each calendar quarter.

6.2 For sulfur dioxide, the following data resubmitted to the Regional Administrator of the USEPA, Region 5 and the Director, of the IEPA for each 24-hour period:

6.2.1 Calendar date

6.2.2 The combined average sulfur dioxide emission rate (ng/J or lb/million Btu) for the past 30 successive boiler operating days (ending with the last 30-day period in the quarter); and, for any noncompliance periods, reasons for noncompliance with the emission standards and description of corrective action taken.

6.2.3 Identification of the boiler operating days for which valid sulfur dioxide emissions data required by 4.6 have not been obtained for 75 percent of the boiler operating hours; reasons for not obtaining sufficient data; and description of corrective actions taken to prevent recurrence.

6.2.4 Identification of the time periods (hours) when Unit 1 or Unit 2 were operated but combined hourly emission rates (EC) were not calculated because of the unavailability of parameters E1, E2, H1, or H2 as described in 3.2.

6.2.5 Identification of the time periods (hours) when Unit 1 and Unit 2 were operated and where the combined hourly emission rate (EC) equalled Unit 2 (E2/H2) emissions because of the Unit 1 malfunction provisions under 3.5.3, and 3.5.4.

6.2.6 Identification of the time periods (hours) when emissions from the Unit 1 DAFGDS have been excluded from the calculation of average sulfur dioxide emission rates because of Unit 1 DAFGDS startup, shutdown, malfunction, or other reasons; and justification for excluding data for reasons other than startup or shutdown. Reporting of hourly emission rate of Unit 1 (E1/H2) during each hour of the DAFGDS startup, malfunction under 3.5.1, 3.5.2, 3.5.3, and 3.5.4 (see 4.5).

6.2.7 Identification of the number of days in the calendar quarter that the affected facility was operated (any fuel fired).

6.2.8 Identify any periods where Unit 1 DAFGDS malfunctions occurred and the cumulative hours of Unit 1 DAFGDS malfunction for the quarter.

6.2.9 Identify any periods of time that any exhaust gases were discharged to the DAFGDS bypass stack and the hourly gas flow rate through the DAFGDS stack and through the DAFGDS bypass stack during such periods and reason for bypass operation.

6.2.10 [Reserved]

[52 FR 28955, Aug. 4, 1987, as amended at 58 FR 28785, May 17, 1993; 59 FR 8135, Feb. 18, 1994]

APPENDIX H TO PART 60 [RESERVED]

APPENDIX I TO PART 60—REMOVABLE LABEL AND OWNER'S MANUAL

1. Introduction

The purpose of this appendix is to provide guidance to the manufacturer for compliance with the temporary labeling and owner's manual provisions of subpart AAA. Section 2 provides guidance for the content and presentation of information on the temporary labels. Section 3 provides guidance for the contents of the owner's manual.

2. Temporary Labels

2.1 General

Temporary labels shall be printed on 90 pound bond paper and shall measure 5 inches wide by 7 inches long. All labels shall be printed in black ink on one side of the label only. The type font that shall be used for all printing is helvetica. Specific instructions for drafting labels are provided below depending upon the compliance status of the wood heater model. Figures 1 through 7 illustrate the various label types that may apply.

2.2 Certified Wood Heaters

The design and content of certified wood heaters vary according to the following:

- Catalyst or noncatalyst,
- Measured or default thermal efficiency value, and
- Compliance with 1988 or 1990 emission limit.

There are five parts of a label. These include:

- Identification and compliance status,
- Emission value,
- Efficiency value,
- Heat output value, and
- Caveats.

Instructions for drafting each of these five parts are discussed below in terms of the three variables listed above. Figures 1 and 2 illustrate the variations in label design. Figure 1 is a temporary label for a hypothetical catalyst wood heater that meets the 1990 standard, has a certification test emission composite value of 3.5 g/h, and has a default efficiency of 72 percent. The label in Figure 2 is for a hypothetical noncatalyst wood heater with a certification test emission composite value of 7.8 g/h and a measured efficiency of 68 percent. It meets the 1988 but not the 1990 standard. All labels for wood heaters that have been certified and tested should conform as much as possible to the general layout, the type font and type size illustrated in Figures 1 and 2.

2.2.1 Identification and Compliance Status

The top 1.5 inches of the label should contain the following items (and location on the label):

- Manufacturer name (upper left hand corner,
- Model name/number (upper left hand corner,
- The words ''U.S. ENVIRONMENTAL PROTECTION AGENCY'' (centered at top and enclosed in a box with rounded edges),
- For catalytic wood heaters, in large bold print the words ''CATALYST EQUIPPED'' (centered below the words ''U.S. ENVIRONMENTAL PROTECTION AGENCY''),
- Text indicating compliance status for catalytic wood heaters. For those catalytic wood heaters which comply with the 1988 emission limits, but not the 1990 emission limits, the words: ''Meets EPA particulate matter (smoke) control requirements for catalytic wood heaters built on or after July 1, 1988, and before July 1, 1990.'' For those catalytic wood heaters which comply with the 1990 emission limits, the words: ''Meets EPA particulate matter (smoke) control requirements for catalytic wood heaters built on or after July 1, 1990.'' Finally, for all catalytic wood heaters, the following text should be included: ''See catalyst warranty. Illegal to operate when catalyst is not working. See owner's manual for operation and maintenance.''
- Text indicating compliance status for noncatalytic wood heaters. For those noncatalytic wood heaters that comply with the 1988 emission limits but not the 1990 emission limits, the words: ''Meets EPA particulate matter (smoke) control requirements for NONCATALYTIC wood heaters built on or after July 1, 1988, and before July 1, 1990.'' For those noncatalytic wood heaters that comply with 1990 emission limits, the words: ''Meets EPA particulate matter (smoke) control requirements for NONCATALYTIC wood heaters built on or after July 1, 1990.''

2.2.2 Emission Value

Between 1.5 and 3.0 inches down from the top of the label is the part that graphically illustrates the particulate matter, or smoke, emission value. This part consists of the word ''SMOKE'' in large bold print and a 3.0 inch line with words ''(grams per hour)'' centered beneath the line. A blunt end arrow with a base (blunt end) that spans 2 g/hr shall be centered over the point on the emissions line that represents the composite emission value for the model as measured in the certification test.

For catalyst equipped wood heaters the 3.0 inch line shall be labeled ''0'' on the left end of the line (centered below the end) and ''5.5'' on the right end (centered below the end). To find where to center the large blunt end arrow, measure 0.55 inches from the left end

for each g/h of the composite emission value. Thus, a 4 g/h value would be 2.2 inches from the left end. The base of the blunt end should always be 1.1 inches wide (2 g/hr). The words ''This Model'' should be centered above or within the blunt end arrow.

For noncatalyst equipped wood heaters, the 3.0 inch line should be labeled ''0'' on the left end of the line (centered below the end) and ''8.5'' on the right end of the line (centered below the end). To find where to center the large blunt end arrow, measure 0.35 inches from the left end for each g/h of the composite emission value. Thus, a 4 g/h value would be 1.4 inches from the left end. The base of the blunt end should always be 0.7 inches wide (2 g/h). The words ''This Model'' should be centered above or within the blunt end arrow.

2.2.3 Efficiency Value

Between 3.0 and 4.75 inches down from the top of the label is the part that illustrates overall thermal efficiency value. The efficiency value may either be a measured value or a calculated or default value as provided in §60.536(i)(3) of the regulation. Regardless of how the efficiency is derived, the words ''EFFICIENCY'' shall be centered above a 4 inch line. The 4 inch line should be divided into 5 equal lengths (each 0.8 inches) and labeled ''50%,'' ''60%,'' * * * ''100%'' as indicated in Figures 1 and 2. As with the smoke line in 2.2.2, a blunt end arrow shall be centered over the point on the line where the efficiency value would be located. The base of the blunt end arrow shall be 0.48 inches wide (6 percentage points). To find where to center the blunt end arrow, measure 0.08 inches for each percentage point to the right of the nearest labeled value. For example, a value of 82 percent would be 0.16 inches to the right of the ''80%'' mark.

For default efficiency values, an asterisk shall follow the word ''EFFICIENCY'' as in Figure 1. The asterisk refers to a note in parentheses that shall say ''Not tested for efficiency. Value indicated is for similar catalyst equipped (or noncatalytic, as appropriate) wood heaters.''

For measured efficiency values measured with the method in appendix J, the words ''Tested Efficiency'' shall be centered above the blunt end arrow as in Figure 2.

The last item required for this part is a sentence that says ''Wood heaters with higher efficiencies cost less to operate.''

2.2.4 Heat Output Value

Between 4.75 and 6.0 inches down from the top of the label is the heat output part. The words ''HEAT OUTPUT'' in large bold print are centered above the Heat Output range numbers in Btu/hr, as derived from the certification test. The words ''Use this to choose the right size appliance for your needs. ASK DEALER FOR HELP'' should follow the heat output range numbers as in Figures 1 and 2. (Note that ''ASK DEALER FOR HELP'' is a single line, centered in the label.) The low end of the burn rate range indicated on the label should reflect the low end of the burn rate range achievable by the wood heater as sold and not as tested in the laboratory (see §60.536(i)(4)).

2.2.5 Caveats

In the lower 0.75 inch of the label, the following text shall be presented:

''This wood heater will achieve low smoke output and high efficiency only if properly operated and maintained. See owner's manual.''

2.3 Coal-Only Heaters

For those heaters which meet the definition of ''coal only heater'' in §60.531, the temporary label should contain the identical material (same layout and print font and size) as that illustrated in Figure 3, except that the hypothetical manufacturer and model name should be replaced with the appropriate actual names.

2.4 Small Manufacturer Exempted Wood Heaters

For those wood heaters exempted under §60.530(d), the small manufacturer exemption, the temporary label should contain the identical material (same layout and print font and size) as that illustrated in Figure 4, except that the hypothetical manufacturer and model name should be replaced with the appropriate actual names.

2.5 Wood Heaters that Are Not Certified

For those wood heaters that do not meet applicable emission limits under §60.532 and are not otherwise exempted, the temporary label should contain the identical material (same layout and print font and size) as those illustrated in Figures 5, 6, and 7, as appropriate. The hypothetical manufacturer and model names should be replaced with the appropriate actual names.

There are three kinds of wood heaters which fall into this category of ''not certified.'' Each requires a separate label. If a wood heater is tested but fails to meet the applicable limits, the label in Figure 5 applies. Such a label should be printed on red rather than white paper. If a wood heater is tested and does meet the emission limit but is not subsequently certified, the label in Figure 6 applies. (An example would be a one-of-a-kind wood heater which is not part of a model line. Because of the costs of testing, this circumstance is not expected to arise often, if at all.) If a wood heater is not tested and is not certified, it should bear the label illustrated in Figure 7. As with Figure 5, this label should be printed on red paper.

3.0 Guidance for Preparation of Wood Heater Owner's Manuals

3.1 Introduction

Although the owner's manuals do not require premarket approval, EPA will monitor the contents to ensure that sufficient information is included to provide heater operation and maintenance information affecting emissions to consumers. The purpose of this section is to provide guidance to manufacturers in complying with the owner's manual provisions of §60.536(1). A checklist of topics and illustrative language is provided as a guideline. Owner's manuals should be tailored to specific wood heater models, as appropriate.

3.2 Topics Required To Be Addressed in Owner's Manual

- Wood heater description and compliance status,
- Tamper warning,
- Catalyst information and warranty (if catalyst equipped),
- Fuel selection,
- Achieving and maintaining catalyst light-off (if catalyst equipped),
- Catalyst monitoring (if catalyst equipped),
- Troubleshooting catalytic equipped heaters (if catalyst equipped),
- Catalyst replacement (if catalyst equipped),
- Wood heater operation and maintenance, and
- Wood heater installation: achieving proper draft.

3.3 Sample Text/Descriptions

The following are example texts and/or further descriptions illustrating the topics identified above. Although the regulation requires manufacturers to address (where applicable) the ten topics identified above, the exact language is not specified. Manuals should be written specific to the model and design of the wood heater. The following guidance is composed of generic descriptions and texts. If manufacturers choose to use the language provided in the example, the portion in italics should be revised as appropriate. Any manufacturer electing to use the EPA example language shall be in compliance with owner's manual requirements provided that the particular language is printed in full with only such changes as are necessary to ensure accuracy. Example language is not provided for certain topics, since these areas are generally heater specific. For these topics, manufacturers should develop text that is specific to the operation and maintenance of their particular products.

3.3.1 Wood Heater Description and Compliance Status

Owner's Manuals shall include:

A. Manufacturer and model,

B. Compliance status (exempt, 1988 std., 1990 std., etc.), and

C. Heat output range (as indicated on temporary label).

Example Text covering A, B, and C above:

''This manual describes the installation and operation of the *Brand X, Model 0 catalytic equipped* wood heater. This heater meets the U.S. Environmental Protection Agency's emission limits for wood heaters sold *between July 1, 1990, and July 1, 1992.* Under specific test conditions this heater has been shown to deliver heat at rates ranging from *8,000* to *35,000* Btu/hr.''

3.3.2 Tamper Warning

This consists of the following statement which must be included in the owner's manual for catalyst equipped units:

Example Text covering legal prohibition on tampering:

''This wood heater contains a catalytic combustor, which needs periodic inspection and replacement for proper operation. It is against the law to operate this wood heater in a manner inconsistent with operating instructions in this manual, or if the catalytic element is deactivated or removed.''

3.3.3 Catalyst Information

Included with or supplied in the owner's and warranty manuals shall be the following information:

A. Catalyst manufacturer, model,

B. Catalyst warranty details, and

C. Instructions for warranty claims.

Example Text covering A, B, and C:

''The combustor supplied with this heater is a *Brand Z, Long Life Combustor.* Consult the catalytic combustor warranty also supplied with this wood heater. Warranty claims should be addressed to:

Stove or Catalyst Manufacturer
Address
Phone #

This section should also provide clear guidance on how to exercise the warranty (how to package for return shipment, etc.).

3.3.4 Fuel Selection

Owner's manuals shall include:

A. Instructions on acceptable fuels, and

B. Warning against inappropriate fuels.

Example Text covering A and B:

''This heater is designed to burn natural wood only. Higher efficiencies and lower emissions generally result when burning air dried seasoned hardwoods, as compared to softwoods or to green or freshly cut hardwoods.

DO NOT BURN:

- Treated Wood.
- Coal.
- Garbage.
- Cardboard.
- Solvents.
- Colored Paper.
- Trash.

Burning treated wood, garbage, solvents, colored paper or trash may result in release of toxic fumes and may poison or render ineffective the catalytic combustor.

Burning coal, cardboard, or loose paper can produce soot, or large flakes of char or fly ash that can coat the combustor, causing smoke spillage into the room, and rendering the combustor ineffective.''

3.3.5 Achieving and Maintaining Catalyst Light-Off

Owner's manuals shall describe in detail proper procedures for:

A. Operation of catalyst bypass (stove specific),

B. Achieving catalyst light-off from a cold start, and

C. Achieving catalyst light-off when refueling.

No example text is supplied for describing operation of catalyst bypass mechanisms (Item A) since these are typically stove-specific. Manufacturers however must provide instructions specific to their model describing:

1. Bypass position during start-up,

2. Bypass position during normal operation, and

3. Bypass position during reloading.

Example Text for item B:

''The temperature in the stove and the gases entering the combustor must be raised to between *500°* to *700°*F for catalytic activity to be initiated. During the start-up of a cold stove, a medium to high firing rate must be maintained for about *20 minutes. This ensures that the stove, catalyst, and fuel are all stabilized at proper operating temperatures. Even though it is possible to have gas temperatures reach 600* °F within two to three minutes after a fire is started, if the fire is allowed to die down immediately it may go out or the combustor may stop working. Once the combustor starts working, heat generated in it by burning the smoke will keep it working.''

Example Text for item C:

REFUELING:

''During the refueling and rekindling of a cool fire, or a fire that has burned down to the charcoal phase, operate the stove at a medium to high firing rate for about *10 minutes* to ensure that the catalyst reaches approximately *600* °F.''

3.3.6 Catalyst Monitoring

Owner's manuals shall include:

A. Recommendation to visually inspect combustor at least three times during the heating season,

B. Discussion on expected combustor temperatures for monitor-equipped units, and

C. Suggested monitoring and inspection techniques.

Example Text covering A, B, and C:

''It is important to periodically monitor the operation of the catalytic combustor to ensure that it is functioning properly and to determine when it needs to be replaced. A non-functioning combustor will result in a loss of heating efficiency, and an increase in creosote and emissions. Following is a list of items that should be checked on a periodic basis.

- Combustors should be visually inspected at least three times during the heating season to determine if physical degradation has occurred. Actual removal of the combustor is not recommended unless more detailed inspection is warranted because of decreased performance. If any of these conditions exist, refer to Catalyst Troubleshooting section of this owner's manual.
- This catalytic heater is equipped with a temperature probe to monitor catalyst operation. Properly functioning combustors typically maintain temperatures in excess of *500* °F, and often reach temperatures in excess of *1,000* °F. If catalyst temperatures are not in excess of *500* °F, refer to Catalyst Troubleshooting section of this owner's manual.
- You can get an indication of whether the catalyst is working by comparing the amount of smoke leaving the chimney when the smoke is going through the combustor and catalyst light-off has been achieved, to the amount of smoke leaving the chimney when the smoke is not routed through the combustor (bypass mode).

Step 1—Light stove in accordance with instructions in *3.3.5.*

Step 2—With smoke routed through the catalyst, go outside and observe the emissions leaving the chimney.

Step 3—Engage the bypass mechanism and again observe the emissions leaving the chimney.

Significantly more smoke should be seen when the exhaust is not routed through the combustor (bypass mode). Be careful not to confuse smoke with steam from wet wood.''

3.3.7 Catalyst Troubleshooting

The owner's manual should provide clear descriptions of symptoms and remedies to common combustor problems. It is recommended that photographs of catalyst peeling, plugging, thermal cracking, mechanical cracking, and masking be included in the manual to aid the consumer in identifying problems and to provide direction for corrective action.

3.3.8 Catalyst Replacement

The owner's manual should provide clear step-by-step instructions on how to remove and replace the catalytic combustor. The section should include diagrams and/or photographs.

3.3.9 Wood Heater Operation and Maintenance

Owner's manual shall include:

A. Recommendations about building and maintaining a fire,

B. Instruction on proper use of air controls,

C. Ash removal and disposal,

D. Instruction on gasket replacement, and

E. Warning against overfiring.

No example text is supplied for A, B, and D since these items are model specific. Manufacturers should provide detailed instructions on building and maintaining a fire including selection of fuel pieces, fuel quantity, and stacking arrangement. Manufacturers should also provide instruction on proper air settings (both primary and secondary) for attaining minimum and maximum heat outputs and any special instructions for operating thermostatic controls. Step-by-step instructions on inspection and replacement of gaskets should also be included. Manufacturers should provide diagrams and/or photographs to assist the consumer. Gasket type and size should be specified.

Example Text for item C:

''Whenever ashes get *3 to 4 inches* deep in your firebox or ash pan, and when the fire has burned down and cooled, remove excess ashes. Leave an ash bed approximately *1 inch* deep on the firebox bottom to help maintain a hot charcoal bed.''

''Ashes should be placed in a metal container with a tight-fitting lid. The closed container of ashes should be placed on a noncombustible floor or on the ground, away from all combustible materials, pending final disposal. The ashes should be retained in the closed container until all cinders have thoroughly cooled.''

Example Text covering item E:

''DO NOT OVERFIRE THIS HEATER''

''Attempts to achieve heat output rates that exceed heater design specifications can result in permanent damage to the heater and to the catalytic combustor if so equipped.''

3.3.10 Wood Heater Installation: Achieving Proper Draft

Owner's manual shall include:

A. Importance of proper draft,

B. Conditions indicating inadequate draft, and

C. Conditions indicating excessive draft.

Example Text for Item A:

''Draft is the force which moves air from the appliance up through the chimney. The amount of draft in your chimney depends on the length of the chimney, local geography, nearby obstructions, and other factors. Too much draft may cause excessive temperatures in the appliance *and may damage the catalytic combustor.* Inadequate draft may cause backpuffing into the room and 'plugging' of the chimney *or the catalyst.''*

Example text for Item B:

''Inadequate draft will cause the appliance to leak smoke into the room through appliance and chimney connector joints.''

Example text Item C:

''An uncontrollable burn or a glowing red stove part or chimney connector indicates excessive draft.''

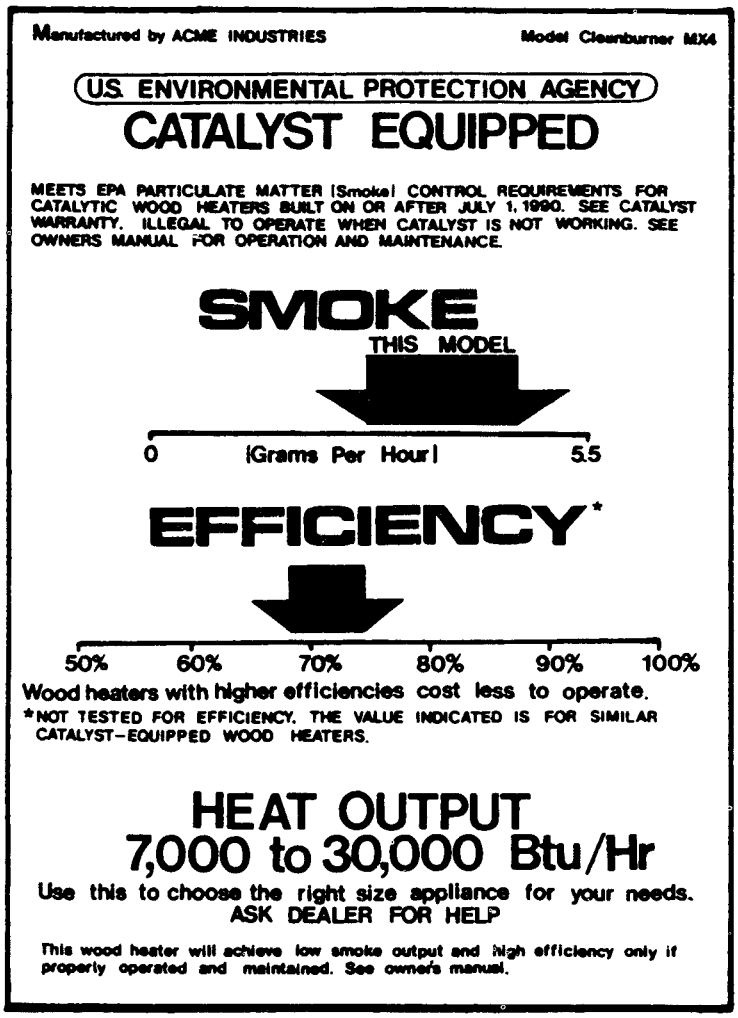

Figure 1. Temporary label for hypothetical wood heater: (1) catalytic, (2) estimated efficiency, and (3) meets 1990 standard.
Emissions: 3.5 g/hr
Efficiency: 72 percent

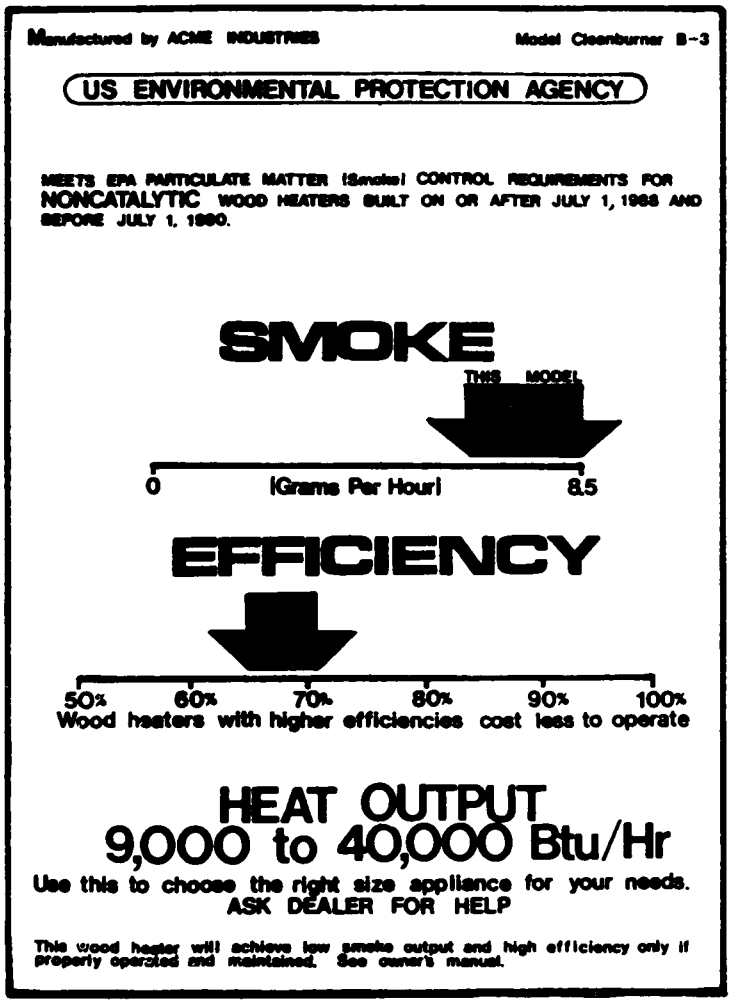

Figure 2. Temporary label for hypothetical wood heater: (1) noncatalytic, (2) measured efficiency, and (3) meets 1988 standard.
Emissions: 7.8 g/hr
Efficiency: 68 percent

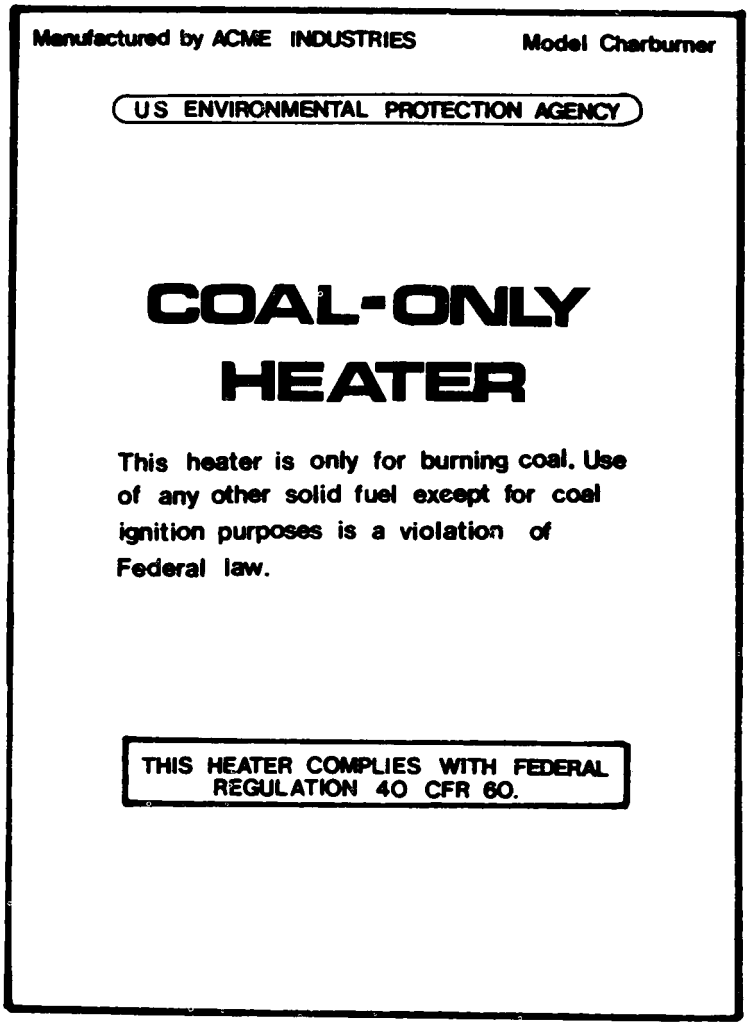

Figure 3. Temporary-label for hypothetical coal-only heater.

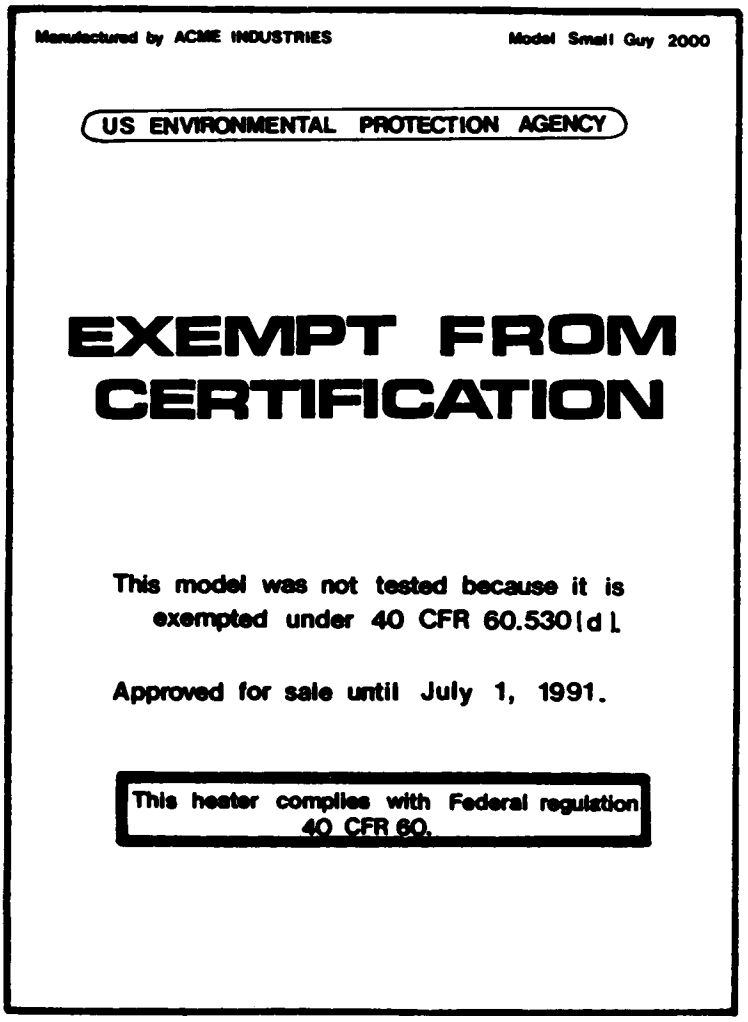

Figure 4. Temporary label for hypothetical wood heater. exempted under samll manufacturer exemption.

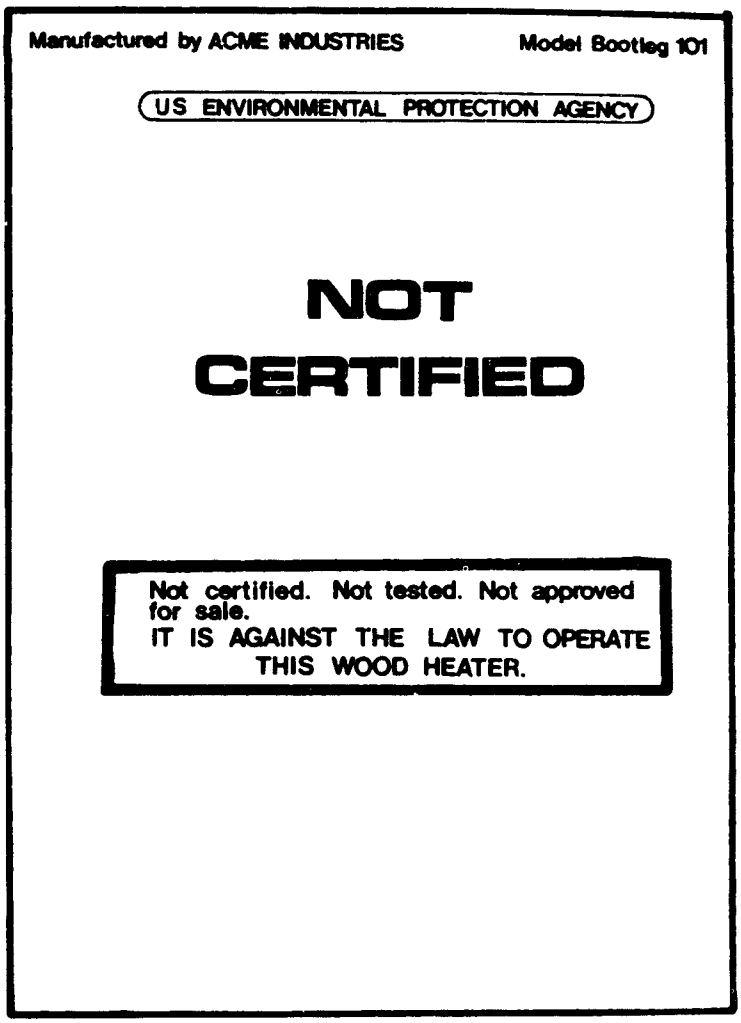

Figure 5. Temporary label for hypothetical wood heater that was not tested, not certified, and does not meet applicable standards.

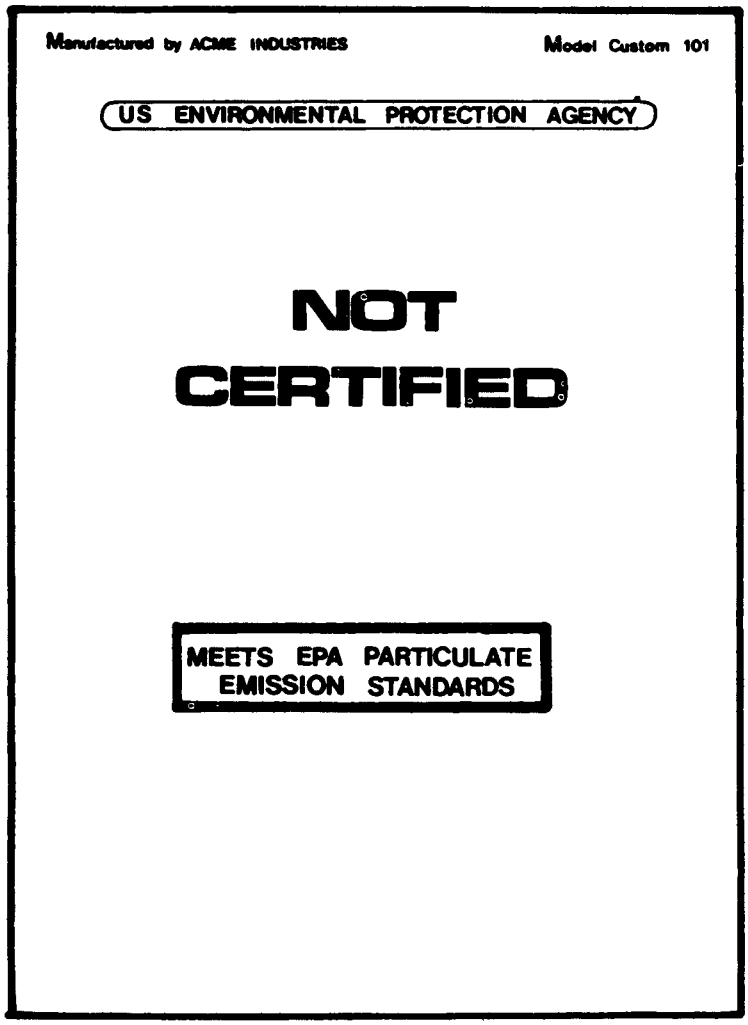

Figure 6. Temporary label for hypothetical wood heater that has been tested, meets applicable standards, but was not certified.

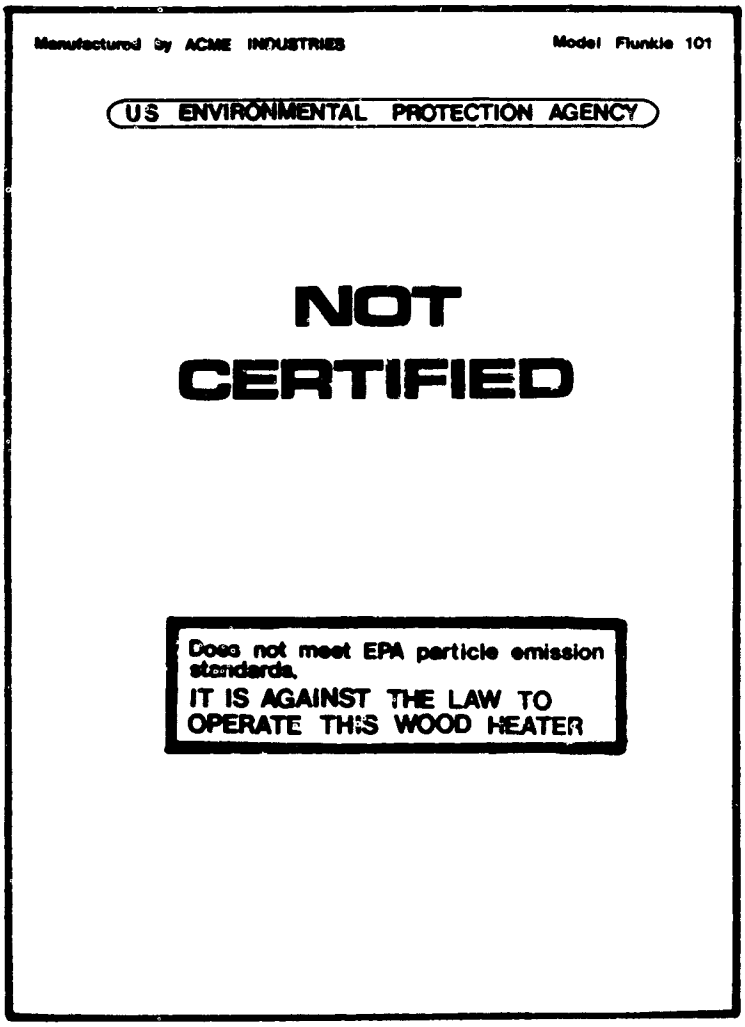

Figure 7. Temporary label for hypothetical wood heater that has been tested, but does not meet applicable standards and was not certified.

[53 FR 5913, Feb. 26, 1988]