S. Hrg. 110–181

DIRTY BOMB VULNERABILITIES: FAKE COMPANIES, FAKE LICENSES, REAL CONSEQUENCES

HEARING

BEFORE THE

PERMANENT SUBCOMMITTEE ON INVESTIGATIONS

OF THE

COMMITTEE ON
HOMELAND SECURITY AND
GOVERNMENTAL AFFAIRS
UNITED STATES SENATE

ONE HUNDRED TENTH CONGRESS

FIRST SESSION

JULY 12, 2007

Available via http://www.access.gpo.gov/congress/senate

Printed for the use of the
Committee on Homeland Security and Governmental Affairs

U.S. GOVERNMENT PRINTING OFFICE

★ **STAR PRINT** 37–358 PDF WASHINGTON : 2007

For sale by the Superintendent of Documents, U.S. Government Printing Office
Internet: bookstore.gpo.gov Phone: toll free (866) 512–1800; DC area (202) 512–1800
Fax: (202) 512–2104 Mail: Stop IDCC, Washington, DC 20402–0001

COMMITTEE ON HOMELAND SECURITY AND GOVERNMENTAL AFFAIRS

JOSEPH I. LIEBERMAN, Connecticut, *Chairman*

CARL LEVIN, Michigan	SUSAN M. COLLINS, Maine
DANIEL K. AKAKA, Hawaii	TED STEVENS, Alaska
THOMAS R. CARPER, Delaware	GEORGE V. VOINOVICH, Ohio
MARK PRYOR, Arkansas	NORM COLEMAN, Minnesota
MARY L. LANDRIEU, Louisiana	TOM COBURN, Oklahoma
BARACK OBAMA, Illinois	PETE V. DOMENICI, New Mexico
CLAIRE McCASKILL, Missouri	JOHN WARNER, Virginia
JON TESTER, Montana	JOHN E.SUNUNU, New Hampshire

MICHAEL L. ALEXANDER, *Staff Director*
BRANDON L. MILHORN, *Minority Staff Director and Chief Counsel*
TRINA DRIESSNACK TYRER, *Chief Clerk*

PERMANENT SUBCOMMITTEE ON INVESTIGATIONS

CARL LEVIN, Michigan, *Chairman*

THOMAS R. CARPER, Delaware	NORM COLEMAN, Minnesota
MARK L. PRYOR, Arkansas	TOM COBURN, Oklahoma
BARACK OBAMA, Illinois	PETE V. DOMENICI, New Mexico
CLAIRE McCASKILL, Missouri	JOHN WARNER, Virginia
JON TESTER, Montana	JOHN E. SUNUNU, New Hampshire

ELISE J. BEAN, *Staff Director and Chief Counsel*
MADELYN CREEDON, *Counsel to Senator Carl Levin, Armed Services Committee*
MARK L. GREENBLATT, *Staff Director and Chief Counsel to the Minority*
MARK D. NELSON, *Deputy Chief Counsel to the Minority*
TIMOTHY R. TERRY, *Counsel to the Minority*
MARY D. ROBERTSON, *Chief Clerk*

CONTENTS

Opening statements:	Page
Senator Levin	1
Senator Coleman	2
Senator Collins	5
Senator Akaka	6
Senator Carper	7

WITNESSES

THURSDAY, JULY 12, 2007

Gregory D. Kutz, Managing Director, Forensic Audits and Special Investigations; Eugene E. Aloise, Director, Natural Resources and Environment; and John W. Cooney, Assistant Director, Forensic Audits and Special Investigations, U.S. Government Accountability Office	9
Edward McGaffigan, Jr., Commissioner, U.S. Nuclear Regulatory Commission	22

ALPHABETICAL LIST OF WITNESSES

Kutz, Gregory D.:	
Testimony	9
Joint prepared statement	39
Aloise, Eugene E.:	
Testimony	9
Joint prepared statement	39
Cooney, John W.:	
Testimony	9
Joint prepared statement	39
McGaffigan, Edward, Jr.:	
Testimony	22
Prepared statement with attachments	50

EXHIBITS

1. *Dirty Bomb Vulnerabilities,* Permanent Subcommittee on Investigations Staff Report	75
2. *Comparison Of Valid NRC License And Counterfeit GAO License*	100
3. *Response to questions for the record submitted to The Hon. Edward McGaffigan, Jr., Commissioner, Nuclear Regulatory Commission*	101

DIRTY BOMB VULNERABILITIES: FAKE COMPANIES, FAKE LICENSES, REAL CONSEQUENCES

THURSDAY, JULY 12, 2007

U.S. SENATE,
PERMANENT SUBCOMMITTEE ON INVESTIGATIONS,
OF THE COMMITTEE ON HOMELAND SECURITY
AND GOVERNMENTAL AFFAIRS,
Washington, DC.

The Subcommittee met, pursuant to notice, at 9:03 a.m., in room SD–342, Dirksen Senate Office Building, Hon. Carl Levin, Chairman of the Subcommittee, presiding.

Present: Senators Levin, Carper, Akaka, Coleman, Collins, and Warner.

Staff Present: Elise J. Bean, Staff Director and Chief Counsel; Madelyn Creedon, Counsel (Sen. Levin, Armed Services); Mary D. Robertson, Chief Clerk; Mark L. Greenblatt, Staff Director and Chief Counsel to the Minority; Timothy R. Terry, Counsel to the Minority; Ruth Perez, Detailee (IRS); Kunaal Sharma, Intern to the Minority; Adam Doyle, Law Clerk to the Minority; Rob Strayer and Leah Nash (Collins); John Kilvington and Tom Lawler (Carper); and Rick Kessler and Jodi Lieberman (Akaka). .

OPENING STATEMENT OF SENATOR LEVIN

Senator LEVIN. Good morning, everybody. I would like to welcome our witnesses this morning from the Government Accountability Office and the Nuclear Regulatory Commission. Senator Coleman, this hearing is a continuation of a topic on which you have worked diligently—ensuring the protection and control of material that could be used in a so-called dirty bomb.

The material involved in the GAO sting operation that will be the subject of the hearing today is not plutonium or highly enriched uranium, the materials that could be used in a nuclear bomb. But the material that is the subject of the hearing is dirty bomb material—that is, radioactive material in sealed containers used for a variety of medical and industrial purposes that could also be put to nefarious purposes. The vulnerabilities that the GAO has identified, and that the Nuclear Regulatory Commission has acknowledged, are significant.

Since September 11, 2001, the Nuclear Regulatory Commission has rightfully focused its efforts and attention on securing the most dangerous quantities of radioactive material—the quantities of radioactive material classified as Category 1 and 2 materials. Accord-

ing to the International Atomic Energy Agency, an individual who handled or who was in close proximity to Category 1 and 2 quantities of material would probably be dead or severely injured in a few minutes to a few hours. Category 1 and 2 radioactive materials are subject to extraordinarily strict licensing and security requirements.

Smaller quantities of radioactive materials are classified in three additional categories—Categories 3, 4, and 5. An individual who handled Category 3 quantities could be permanently injured if he or she handled the material for many hours or days, with the possibility of death if exposure continues for weeks. Category 4 materials are unlikely to permanently injure people; and Category 5 quantities would not permanently injure people at all.

The ability of the GAO to creatively avoid the NRC restrictions on Category 4 materials in this instance by obtaining small amounts of materials that could be aggregated into larger quantities to get to Category 3 quantities of material is troubling, and that is what happened in this case.

The NRC has recognized that the out-of-the-box thinking on GAO's part did deceive current mechanisms to regulate materials. I note that one of the recommendations that Commissioner McGaffigan has included in his prepared testimony is that the NRC will "evaluate how to probe for other thus far undiscovered vulnerabilities in NRC and Agreement State materials licensing programs." That is an important approach, a good way to try to anticipate problems in advance, and the result of this inquiry. It is also a positive note that the vulnerability that GAO has identified has resulted in prompt reaction by the NRC and that the NRC took steps to address the problem identified.

I look forward to hearing from the GAO about the full scope of the vulnerabilities, the ways in which NRC is responding, and what more needs to be done. Senator Coleman, I commend you and your staff for the persistence that you have shown in this matter. As I know Senator Coleman and Senator Collins are aware, the defense authorization bill is on the floor, and as the manager of that bill, I will have to return to my floor duties fairly soon, so I am going to miss most of this hearing. I regret that I will miss it because it is an important hearing. Then that responsibility will be turned over either to a Democrat, if there is one here, if not, it will be turned over to Senator Coleman.

We have two Ranking Members here this morning. I am not sure which Ranking Member has preference—the Subcommittee Ranking——

Senator COLLINS. Subcommittee.

Senator LEVIN. Subcommittee, all right. In that case, Senator Coleman, it is your time.

OPENING STATEMENT OF SENATOR COLEMAN

Senator COLEMAN. Thank you, Mr. Chairman, and thank you, Ranking Member Collins.

Today's hearing provides a sober reality check. We turn our attention to the threat of a dirty bomb attack and whether our government's efforts to prevent such a disaster are effective. This Subcommittee has been engaged in a 4-year effort to bolster the U.S.

Government's ability to prevent a nuclear or radiological attack on U.S. interests. The Subcommittee's efforts have been thoroughly bipartisan, and I appreciate Senator Levin's continued dedication to this cause.

Make no mistake: The threat of a dirty bomb attack is real. The executive director of the 9/11 Commission stated in 2004 that al-Qaeda "remains interested in using a radiological dispersal device or 'dirty bomb.'" Even worse, he said that "[d]ocuments found in al-Qaeda facilities contain accurate information on the usage and impact of such weapons."

The aspiring terrorists that were arrested in London in August 2004 sought to construct "a crude radiological dirty bomb." In September 2006, the then-leader of al-Qaeda in Iraq reportedly called for "nuclear scientists and explosive experts" to help his terrorist group manufacture "unconventional weapons," specifically including dirty bombs. Sadly, these are just a handful of examples to get a sense of the problem.

In light of this threat, government oversight of radioactive materials has become more important than ever. The best way to prevent a dirty bomb attack is to stop terrorists from getting radiological materials in the first place. Our hearing today—along with the Subcommittee's staff report [1]—will explore some gaps in the Federal Government's regulation of radiological materials. In particular, we will address weaknesses in the Nuclear Regulatory Commission's administration of licenses for radiological materials.

As part of its ongoing investigation into homeland security matters, the Subcommittee requested that the Government Accountability Office conduct a clandestine operation to determine whether a terrorist could use a phony company to slip under the radar and get a valid radiological license in his quest for a dirty bomb. The results are not encouraging.

In short, GAO created two dummy corporations and applied for radiological licenses—one in West Virginia, where the NRC regulates radiological materials, and one in Maryland, a so-called Agreement State that regulates radiological materials on its own. Shortly after receiving the application, regulators in Maryland embarked on a 7-month review process, requesting a site inspection of the company's facilities and interviews with its employees. GAO, knowing that this robust review process would expose their sting operation, withdrew the Maryland application. That is the good news.

The bad news is that the application that went to the NRC was approved in short order. The NRC conducted a cursory review and gave a license to GAO's phony company in just 28 days.

As if that were not bad enough, GAO was able to counterfeit the NRC license—using ordinary computer software that any teenager could use—to remove the restrictions on the amount of radiological materials permitted under the license. In this exhibit,[2] you can see the comparison of the valid NRC license on the left and the counterfeited version on the right, and essentially what you see is a

[1] The See Exhibit No. 1, which appears in the Appendix on page 75.
[2] Exhibit No. 2 appears in the Appendix on page 100.

change in the restrictions on the amount of radiological materials that were permitted under the license.

GAO investigators then used copies of the counterfeited license to execute contracts to buy enough radiological materials to meet the NRC's definition of a "dangerous" quantity—enough, according to GAO, to build a dirty bomb. Perhaps more importantly, investigators could have easily prolonged their effort, generating dozens of fake licenses, visiting multiple suppliers, and stockpiling significantly higher amounts of this—and possibly other, more radioactive—material. The GAO states that it could have purchased "substantially more radioactive source material"—potentially enough to reach the NRC's threshold of a "very dangerous" material. In other words, the modest amount of radiological materials that GAO sought to purchase was but a demonstration amount. There is no doubt—and I think the testimony will demonstrate—that they felt that they could have continued to counterfeit, continued to search out suppliers, and acquired an even larger quantity of radiological material.

These weaknesses are not new. In fact, as detailed in the Subcommittee's staff report, several entities—including the GAO, the NRC Inspector General, and this Subcommittee—have recommended over the past few years that the NRC improve its licensing procedures to ensure that radiological materials will be used as intended.

To its credit, the NRC has shown a willingness to strengthen its licensing process. It made some changes in June 2007 in response to the GAO's latest clandestine operation. Those changes are steps in the right direction—and I applaud the NRC for taking them—but I don't think they go far enough.

I am still concerned that the NRC does not fully appreciate the dirty bomb threat. They appear to be focused on the accident instead of the crime, on safety instead of security, on the good-faith actor in a world of bad-faith people. To be fair, focusing on health and safety is obviously a paramount concern, and the NRC should be commended for its responsible management of the most lethal radiological materials. But in this world of sleeper cells and suicide bombers, we must also be vigilant about the smaller-scale threat.

For instance, we think the NRC should regulate so-called Category 3 sources more stringently. Category 3 refers to the NRC's scale for radioactive sources, which goes from Category 1 through 5, with Category 1 being the most dangerous radiological source amounts and Category 5 the least. I think the Chairman laid this out in his opening statement. Category 3 sources are in the middle range and are designated as "dangerous."

Under the NRC's previous rules, license reviewers were not required to visit the facilities of applicants seeking Category 3 sources before issuing the license. Instead, the NRC would visit those facilities up to one year after the license was issued.

Thankfully, the NRC changed some of its rules soon after GAO's latest operation. While I applaud the NRC's prompt response and recognize that this is a step in the right direction, I believe that their change does not go far enough. Although license reviewers are now required to visit with applicants seeking Category 3 licenses, that "visit" can be a simple meeting at the NRC's offices. So the

problem is clear: Even with this recent change in procedures, the NRC license reviewers are still not required to visit facilities of applicants seeking Category 3 sources before issuing a license. I believe the NRC should require on-site visits—which Maryland apparently requires—not meetings at the NRC—before Category 3 licenses are issued.

In addition, the NRC should evaluate whether to include Category 3 sources in the proposed National Source Tracking System, which will be designed to monitor the most lethal sources from cradle to grave.

The NRC should also take steps to ensure that source materials can be obtained only in authorized amounts by legitimate users. For instance, the NRC should consider establishing a web-based licensing system so that suppliers can go online and check first, that a purchaser's license is actually valid and second, how much radiological material the purchaser is authorized to obtain.

These recommendations are designed to bolster our government's efforts to prevent a radiological attack in the United States. It is clear that terrorists are interested in using a dirty bomb to wreak havoc in this country. In the words of one homeland security expert, the impact of such an attack—even a relatively simple and small dirty bomb—could be a "nightmare scenario."

The issue here is not the amount of lives that would be lost in the explosion itself, or even the amount of radiological material. It is the psychological and the economic impact of having radioactive material thrown about perhaps in a place like Wall Street or in the halls of Congress, and the impact that would have, the long-standing economic and psychological impact that would have.

One critical step is to prevent America's enemies from acquiring radioactive materials in the first place. To that end, the NRC should focus on ensuring that such materials can be obtained only in authorized amounts by legitimate users. These measures will help ensure that the "nightmare scenario" of a dirty bomb never occurs.

I look forward to hearing the testimony from the GAO and Commissioner McGaffigan from the NRC today. I know the Commissioner is passionate about the NRC, and I commend his long tenure in government service. I look forward to discussing with him how we can work together to better protect America.

Thank you, Mr. Chairman.

Senator LEVIN. Thank you, Senator Coleman. Senator Collins.

OPENING STATEMENT OF SENATOR COLLINS

Senator COLLINS. Thank you, Mr. Chairman. Let me start by commending you, Mr. Chairman, and Senator Coleman for your work on this very important investigation.

Since the terrorist attacks of September 11, 2001, I have had the privilege of working with the Members of this Subcommittee, particularly Senator Coleman, on bipartisan measures to strengthen security at our borders and at our seaports. We have made some real progress in preventing terrorists, explosives, biological and chemical weapons, and radioactive materials from penetrating our defenses. Those gains will avail us little, however, if homegrown terrorists can readily acquire deadly materials within our borders

to fuel their attacks. The enterprising work of the GAO investigators suggests that they could do exactly that with relative ease.

The threat of a "dirty bomb" seeded with radioactive materials is widely recognized. The former head of Britain's intelligence service has said it is "only a matter of time" before a dirty bomb attack strikes a country in the West. But we are not the only people feeling threatened: The Chinese Government has included a dirty bomb drill in its security planning for the 2008 Olympics. The consequences, as my colleagues have indicated, could be dire.

A 2004 study published by the National Defense University concludes that a dirty bomb attack "is apt to cause mass panic and great economic damage," even if it is unlikely to cause widespread fatalities. A new Canadian Government study concludes that exploding even a small dirty bomb in Ottawa could cause over $20 billion in economic disruption, in addition to localized death and destruction.

If it is indeed a relatively simple matter to obtain, alter, or counterfeit Nuclear Regulatory Commission licenses to acquire radioactive materials, then we face yet another challenge to achieving homeland security for our people.

The GAO deserves great credit for giving us concrete evidence of this vulnerability, and, again, I want to comment Senator Coleman and Senator Levin for pursuing this investigation. This morning many of us woke up to the report talking about a possible diversion of an airplane. It is a useful reminder that indeed everything has changed since September 11, and this Subcommittee, I know, will continue its work to identify vulnerabilities and propose reforms to increase the chances of yet another attack. Thank you, Mr. Chairman.

Senator LEVIN. Thank you, Senator Collins. Senator Akaka.

OPENING STATEMENT OF SENATOR AKAKA

Senator AKAKA. Thank you, Mr. Chairman. I want to thank you for holding this timely and very important hearing. Despite the numerous measures designed to tighten domestic and international control over the last several years, high-risk radioactive sources are still vulnerable to theft and misuse.

For the sake of bringing back some history of the work of this Subcommittee, I want to go back to the year 2000. I have been concerned about this threat for several years now, and as Ranking Member of the International Security Subcommittee at that time, I expressed my concern that we needed to be better prepared to respond to terrorist attacks. And this was in the year 2000. This led me in early 2002 to request that the Government Accountability Office investigate domestic and international control of radioactive sources, including the Nuclear Regulatory Commission's licensing and control of radioactive sources.

In an August 2003 report to me, GAO stated that the NRC did not know the precise number of sealed sources in use in the United States, that NRC had difficulty in accounting for generally licensed devices containing sources, and that the security of those devices varied at the State level.

As a result, I introduced legislation in 2003 to safely and securely dispose of low-level radioactive waste. This finally became

law in the Energy Policy Act of 2005. The fact is that my legislation should not have been necessary. The NRC and the Department of Energy should have solved this problem. But, unfortunately, my legislation wasn't enough.

GAO testified in front of the Permanent Subcommittee on Investigations 3 years later that more work needed to be done. On March 28, 2006, Gregory Kutz, Managing Director of Forensic Audits and Special Investigations at GAO, one of our witnesses here today, stated that undercover GAO investigators were able to buy radioactive sources using a fake company and were able to transport the material into the United States using falsified NRC documents modeled after those they found on the Internet.

The results of GAO's most recent sting operation indicate that these vulnerabilities in the licensing process still exist. Clearly, more work still needs to be done if we are going to prevent a dirty bomb attack on U.S. soil. The critical first step in that process must be to ensure strong regulatory control over the material used to make such a bomb.

If we are to believe the March 10, 2007, statement of captured al-Qaeda operative Khalid Sheikh Mohammad, in which he told a U.S. military tribunal that he was, "directly in charge . . . of managing and following up on dirty bomb operations on American soil," then the risk of a dirty bomb attack by terrorists remains very real. We cannot allow the NRC licensing system to continue to fail, as it did during the two GAO undercover operations.

In closing, I would like to remind this Subcommittee of another al-Qaeda operative, Dhiren Barot, who told a British court in May about his plans to attack the United States and the United Kingdon using a dirty bomb comprised of, and I am quoting, "a few grams of cobalt–60 with several pounds of explosives . . . enough to close off an area the size of Manhattan." These words are chilling, but they remind us that we must remain vigilant.

Mr. Chairman, I would once again like to thank you and Ranking Member Coleman for organizing this hearing, and I look forward to discussing what steps we can take to ensure that a dirty bomb attack on U.S. soil never happens. Thank you, Mr. Chairman.

Senator LEVIN. Thank you very much, Senator Akaka, and thank you for your longstanding efforts in this area. They have made a notable contribution, and much of the work which you have just discussed is an important background for the work that will be discussed today.

Senator Carper.

OPENING STATEMENT OF SENATOR CARPER

Senator CARPER. Thanks, Mr. Chairman. Thanks for bringing us together today. Welcome to our witnesses and colleagues.

The Nuclear Regulatory Commission has a monumental responsibility, and I can say with confidence that I believe they fulfill that responsibility admirably in most cases.

When I was Governor of Delaware, I oftentimes said to my cabinet—I still say it to my staff here—"If it isn't perfect, make it better."

When it comes to regulating the nuclear industry—from construction gauges to nuclear power plants—the NRC has to be perfect, or as close to perfect as they can be.

As Chair of the Clean Air and Nuclear Safety Subcommittee, part of the Environment and Public Works Committee, oversight of the NRC is one of my top priorities. It is a priority that I share with Senator George Voinovich, who is the Ranking Member of that Subcommittee. In that capacity, we have closely monitored the NRC's efforts to gear up for a renaissance in new nuclear power, and I have often warned the NRC that they cannot lose sight of their current responsibilities while preparing to deal with the enormous task of licensing a new fleet of nuclear power plants.

When the NRC fails as significantly as they appear to have failed in this instance, it shakes the public's confidence. I believe safe, reliable, new nuclear power is one of the keys to our Nation's energy security and climate change concerns. However, a lack of public confidence in the NRC will undermine that opportunity before it even begins.

This incident, coupled with the nuclear fuel spill last year, which was inexplicably kept from Congress for over a year, cannot be ignored nor simply brushed aside as small events that we hope will not happen again, because this is not just about public confidence in the Nuclear Regulatory Commission and nuclear power. This is about public safety.

When I think about this episode, what is most distressing to me is the fact that we should have known better. Experts have been warning us for years now about the impact a dirty bomb exploding in an American city could have. There could be loss of life, of course, but the long-term impact such an incident would have on the economic and physical health of the community that was targeted are likely immeasurable.

The psychological impact a dirty bomb explosion would have not only on the community that was hit but on the Nation as a whole cannot be discounted either. We can open the paper and turn on the news every day and see the impact conventional explosives placed in a backpack or in the trunk of a car have had in communities like Great Britain, Spain, Israel, and Iraq. Just imagine what would happen if those explosives were coupled with radiological materials.

The fact is that a dirty bomb is likely the worst terrorist threat we face as a Nation today, and one of our major lines of defense against them did not hold up when tested. Luckily, this test was not a real test and, hopefully, we can learn from the mistakes that were made.

The sin is not in making mistakes. The sin is not learning from those mistakes. A big mistake has been made here, I believe. We have got to learn from it. Thank you, Mr. Chairman.

Senator LEVIN. Thank you, Senator Carper.

We now welcome our first panel to the hearing this morning from the Government Accountability Office. We have Eugene Aloise, Director of the Nuclear and Nonproliferation Issues Unit at GAO; Gregory Kutz, the Managing Director of the Forensic Audits and Special Investigations Unit at GAO; and John Cooney, Assistant Director of the Forensic Audits and Special Investigations Unit.

Gentlemen, we welcome you, in some cases back to the Subcommittee. You have testified here many times before, and so you are aware that we have a rule under which all witnesses who testify before the Subcommittee are required to be sworn, and I would ask you at this time to please stand and raise your right hands.

Do you swear that the testimony that you are about to give before this Subcommittee will be the truth, the whole truth, and nothing but the truth, so help you, God?

Mr. ALOISE. I do.

Mr. KUTZ. I do.

Mr. COONEY. I do.

Senator LEVIN. The timing system that we will use today will provide that the yellow light comes on 1 minute before your time is up. The light will change from green to yellow, which will give you an opportunity to conclude your remarks. Your written testimony will be printed in the record in its entirety. We would appreciate your limiting your oral testimony to no more than 10 minutes.

Mr. Kutz, I understand that you are going to be presenting the GAO's statement this morning. Is that correct?

Mr. KUTZ. Yes.

Senator LEVIN. Then you may proceed.

TESTIMONY OF GREGORY D. KUTZ,[1] MANAGING DIRECTOR, FORENSIC AUDITS AND SPECIAL INVESTIGATIONS; EUGENE E. ALOISE, DIRECTOR, NATURAL RESOURCES AND ENVIRONMENT; AND JOHN W. COONEY, ASSISTANT DIRECTOR, FORENSIC AUDITS AND SPECIAL INVESTIGATIONS, U.S. GOVERNMENT ACCOUNTABILITY OFFICE

Mr. KUTZ. Mr. Chairman and Members of the Subcommittee, thank you for the opportunity to discuss our covert test of the NRC licensing process. The bottom line of our testimony is that we were able to obtain a genuine NRC license using bogus documents. This license could have been used to accumulate dangerous amounts of radioactive materials.

Our testimony has two parts: First, our prior recommendation; and, second, the results of our covert test.

First, in August 2003, GAO reported vulnerabilities in the NRC licensing process. We recommended that NRC strengthen its process to ensure that sealed sources could not be purchased by those with malicious intent.

As shown on the posterboard timeline, NRC issued new guidance over 3 years after our recommendation. At the request of this Subcommittee, we performed covert testing of the revised NRC licensing process.

Moving on to our second point, our test clearly shows that the revised NRC process did not work. Using bogus businesses and documents, along with a little social engineering, we were able to obtain a genuine NRC radioactive materials license. Let me walk you through what we did and what we found.

For this investigation, we incorporated two bogus businesses—one in a State where NRC issues licenses, and one in an Agree-

[1] The joint prepared statement of Mr. Kutz, Mr. Aloise, and Mr. Cooney appears in the Appendix on page 39.

ment State. Those attempting to purchase radioactive materials——

Senator LEVIN. Would you stop there? I hate to interrupt you, but what is, for everyone's understanding, an "Agreement State"?

Mr. KUTZ. Those are States that have been delegated licensing authority by the NRC to issue radioactive materials licenses. So either NRC issues them or Agreement States will issue them.

There are 34 of these Agreement States, and as I mentioned, they have been delegated the licensing authority from the NRC. One of our tests was of the NRC process, and one of our tests was of a State process—as Senator Coleman mentioned, the State of Maryland.

In February 2007, using the two bogus businesses and our fictitious owners and officers, we submitted one application to the NRC and one to the Agreement State. As with all of our undercover operations, we used only publicly available information, hardware, and software in making our applications.

For the NRC application, we received two calls from the NRC reviewer asking for additional information. In both instances, we amended our application and faxed the additional information to the reviewer. As shown on the posterboard, in March 2007, 28 days after making our application, we received our NRC license.

As shown on the next posterboard, and as Senator Coleman had showed, we altered our genuine NRC license to allow for the purchase of unlimited quantities of radioactive materials. We then faxed this altered license to two suppliers who committed to shipping us numerous machines containing radioactive materials. We did not actually buy the machines or radioactive materials, primarily due to safety and cost considerations. The material that we could have acquired from these two suppliers was sufficient to reach the International Atomic Energy Agency's definition of Category 3. Category 3 sources are considered dangerous if not properly secured. More importantly, with patience and money, we could have accumulated substantially more radioactive material from other suppliers.

To NRC's credit, and as shown on the posterboard, after we informed them of our operation in early June 2007, they suspended their licensing program. Within a matter of days, they issued supplemental interim guidance. Although a step in the right direction, we continue to believe that this guidance should require a site visit before a license is issued.

For the State application, the reviewer called to inform us that a site visit would be required. Since the company office and storage facility that we described and showed in our application did not exist, we chose at this point to suspend our application. We later informed the State that we would not be pursuing our license because of financial problems.

In conclusion, 3 years after reporting NRC process vulnerabilities, we were able to beat the system with a basic ruse. Recent events in the United Kingdom have reminded us that terrorists will use whatever means are available to cause fear and economic harm and to kill innocent people. In this challenging environment, agencies like the NRC must continue to aggressive and proactively assess and address threats. Although we are encouraged by NRC's

recent actions, closing the vulnerabilities discussed today will require additional actions and could take years.

Mr. Chairman, Members of the Subcommittee, this ends our statement. Mr. Aloise, Special Agent Cooney, and I look forward to your questions.

Senator CARPER [presiding]. Mr. Kutz, thanks very much. I am going to ask Senator Coleman, if you would like to lead off with questions, and then we will go to Senator Akaka and then to Senator Collins, and then I will follow her.

Senator COLEMAN. Thank you, Mr. Chairman.

Senator CARPER. You are recognized for 8 minutes.

Senator COLEMAN. Mr. Kutz, looking at the timeline there, there was apparently a 3-year period from the 2003 report that Senator Akaka talked about, which indicated that there were concerns raised about the licensing process, and the guidelines issued. Do you have any reason why it took 3 years?

Mr. KUTZ. Well, and I would ask other people on the panel to add in. I think that they did not take us as seriously the first time as they did based on our most recent sting, because in the most recent sting they revised their policies within a matter of 12 days. The first recommendation, it took over 3 years. So I believe that they took this sting more seriously.

Senator COLEMAN. Was there any technical problem? I am still trying to understand, and they are maybe simply not taking it seriously, and we will certainly turn to the NRC. Are these complex technical issues that had to be reviewed and analyzed for a few years before new procedures were put in place?

Mr. ALOISE. Senator, if I might?

Senator COLEMAN. Mr. Aloise.

Mr. ALOISE. Senator, there is a lot of what NRC does that we agree with, and we have a lot of respect for NRC. We have our differences, too, and this is one of the areas. In our view, NRC has not been aggressive enough in licensing and tracking radiological sources, the materials that can be used to make dirty bombs. And, in fact, one of their executives told us, "We are not good at deterrence in this area."

So we believe they need to be more aggressive in this area. We have for several years now. It is evidenced by the fact that it took them 3 years to develop guidance which we beat in 28 days.

Senator COLEMAN. Some would suggest, some might argue that this issue was being hyped. How would you respond to that?

Mr. ALOISE. We believe it is a very important issue and it needs their attention. Let's just fix the system that is broken.

Senator COLEMAN. Looking at the quantity of materials that you were able to counterfeit, how difficult was it to alter the license? What kind of procedures did you employ? Is this something that would require great technical expertise, or was it a simple process they used?

Mr. KUTZ. It was a simple process, basic off-the-shelf hardware and software. And, actually, we probably used a more elaborate scheme than we needed to because we had to fax the license to the suppliers to get the actual shipment. So we could have probably just done a basic cut and paste and faxed it, but we actually took

the license, scanned it in, and modified those sections, and then faxed it to two suppliers, and it looked genuine at that point.

Senator COLEMAN. When you faxed it to two suppliers, did Supplier 1 know that you faxed it to Supplier 2?

Mr. KUTZ. I do not believe so.

Senator COLEMAN. And if there were Suppliers 3, 4, 5, 6, 7, 8, 9, and 10, would they have any—is there any system in place that would alert any of the other suppliers that, in fact, a single license was being used multiple times to obtain quantities of material in excess of the license's "allowable amount"?

Mr. KUTZ. Not that we are aware of. As I mentioned in the opening statement, I think if we had been patient, taken our time, and had a little bit more money, we could have continued to purchase machines with radioactive materials.

Senator COLEMAN. One of the recommendations in the report concerns the ability to counterfeit. You were able to change the quantities and material that is involved. You could have sent it out to multiple suppliers. I take it, from what we have seen in the past, that, for terrorists, getting and having money has not been a problem.

I have talked about a web-based system. Can you respond to that recommendation?

Mr. KUTZ. For the counterfeiting issue?

Senator COLEMAN. Yes.

Mr. KUTZ. Yes, that would be a better way to address the counterfeiting. I think the reason I mentioned in my opening statement that a solution may be several years away is I believe NRC's documents are showing 2009 as the implementation date for a web-based system. So, in the meantime, that vulnerability will still exist unless they have other alternative means for suppliers to be able to look to determine that a license is counterfeit.

Senator COLEMAN. And when we say web-based system, that would mean that you would have a single database that people would go to, that suppliers or others would have to go to the single database, and this database could indicate whether, in fact, multiple suppliers were being employed and whether the license was being used beyond its intended purpose? Is that correct?

Mr. KUTZ. Yes, for the counterfeiting, we believe that the web-based system would have great potential.

Senator COLEMAN. What is the application fee from the NRC for this license? And what is the application fee from one of the Agreement States, from Maryland?

Mr. KUTZ. For NRC it was $1,200; for Maryland it was $1,000.

Senator COLEMAN. So the NRC license, the application fee was a little more, and yet they didn't require a site visit?

Mr. KUTZ. Right. Maryland was going to actually visit our facility, tour the facility, and take 7 months for the process. The NRC process, as we mentioned, took 28 days, and so from a cost perspective, I would assume Maryland would have cost a little bit more to do that work.

Senator COLEMAN. I am trying to understand why a site visit may not be recommended. In 2007, after the sting, the NRC did change the regulations and talked about a visit. Did that visit mean a site visit, or it could have meant some other kind of visit?

Mr. ALOISE. Are you talking about their new interim guidance?

Senator COLEMAN. Yes, new guidelines.

Mr. ALOISE. It is an either/or. They are either going to have a site visit or they are going to allow for a face-to-face visit in an NRC office, which we do not believe is as good as actually touring the site.

Senator COLEMAN. So, in fact, you had to shut down your application when Maryland said they were going to tour the site because there was no site.

Mr. ALOISE. There was no site.

Senator COLEMAN. Is this a volume issue? Is the NRC so overwhelmed with applications that it is difficult or impossible for them to actually do site visits?

Mr. ALOISE. There are always resource issues to be addressed. The States have to address them, too, but the States are able to make the site visits as well.

Site visits are something that should be explored through contracting or however it needs to be done, but it needs to be done.

Mr. KUTZ. Well, Senator, I would say, too, with respect to the office visit versus the site visit, certainly the office visit is an improvement from what we had because Special Agent Cooney received two phone calls. So on the phone, it is easier to engineer the situation than face to face. I am not discounting that an office visit would be tougher, but it is possible to beat an office visit.

Senator COLEMAN. Senator Carper had a wonderful statement. He said, "If it isn't perfect, make it better." Clearly, a visit to the office is better than no visit, but a site visit to determine whether, in fact, there is a site is obviously better than a phone call or calling somebody into the office.

Mr. KUTZ. Yes, we would consider that the gold standard.

Senator COLEMAN. And as a result, do you believe that the June 2007 interim guidance solved the problem?

Mr. KUTZ. Well, no. Again, I think there are three parts to it. I think that the issue of office visit is only one element. The other issue you mentioned, counterfeiting, has not been solved. I think there is a third element here, the human capital element. Part of what we do in testing, oftentimes you have good policies on paper, but you are able to beat the people. And that is the other part of this, I think, that needs to be addressed. I think they have talked about additional training from the standpoint of security and how to recognize, and even in the guidance they had in 2006, there were certain steps that if someone had followed for our test, like done a Google, for example, they would have figured out that we do not exist.

Senator COLEMAN. Let me talk about the amount of material. There are some who would argue that these are insignificant amounts. In fact, as I recall the *Time Magazine* report about the London terrorists, they were actually taking apart smoke detectors to try to create some kind of dirty bomb.

Can you respond to the notion that we are really dealing with insignificant quantities here? And, again, it gets back to this issue that we are making this to appear to be a bigger problem than it really is.

Mr. ALOISE. Senator, of course, there is a lot of debate about this. It is almost like asking how many sticks of dynamite it takes to make a car bomb. The point is once an explosion occurs, or a dispersal event happens, and first responders' radiation detectors go off, the consequences start from there. You do not know what it is you are dealing with. You do not know how much. You do not know how dangerous the isotope is. So you are going to have to take actions like evacuating the area, shuting down businesses, closing down transportation.

No one knows what the impact would be. That is why it is so important to prevent it.

Senator COLEMAN. And there is no question in your mind that, with the phony license that you received for a bogus company, you would have been able to obtain enough material to construct a dirty bomb that, if exploded in a place like Wall Street or some other area, would have significant economic impact and psychological impact beyond just the loss of life that may or may not have occurred?

Mr. ALOISE. We are absolutely convinced.

Senator COLEMAN. Thank you, Mr. Chairman.

Senator CARPER. You are welcome.

Senator Akaka, you are recognized for 8 minutes.

Senator AKAKA. Thank you very much, Mr. Chairman.

First, I would like to thank GAO for their hard work over the years and their hard work for this Subcommittee on this issue. And I thank Senator Coleman and Senator Levin for keeping this issue in the spotlight.

After hearing your testimony, Mr. Kutz, that GAO has made recommendations and also has reported results of your findings, and that you are recommending that NRC licensing be strengthened, although still early this year your covert process found that it did not work, so, Mr. Kutz, GAO has recommended that NRC consider the social and economic impacts of radioactive sources using a dirty bomb. Given the difficulty in measuring these aspects, my question to you is how NRC might do this?

Mr. KUTZ. There are several elements of this. There is the site visit that we believe is important, and I know that even under their old process, the site visit was going to happen, but possibly a year after you actually got your license. We still believe a face-to-face site visit would be a good step before you issue a license.

We mentioned the issue of counterfeiting. Even if you do the site visit, suppliers who receive a faxed copy of an NRC license that is counterfeited still today could possibly end up shipping to someone with malicious intent. So the counterfeiting issue needs to be dealt with. And as I mentioned, the human capital element of this, having people trained in whatever guidance exists, assuming the guidance becomes solid and good, are people trained in actually looking at this from a security standpoint in addition to the scientific and technical standpoint? We think that is also something that they need to consider from a training standpoint.

Senator AKAKA. All right. Well, thank you very much.

Thank you, Mr. Chairman.

Senator CARPER. Thank you, Senator Akaka.

Senator Collins, you are recognized for 8 minutes.

Senator COLLINS. Thank you very much, Mr. Chairman.

Mr. Kutz, I was struck with how different the response was from the State of Maryland versus the NRC, and if you had asked me prior to this investigation which entity would have done a more thorough review, I would have guessed without hesitation that it would have been the NRC and not the State Government. So I think that is a very interesting finding because the scrutiny of the two applications was dramatically different to the point where GAO abandoned its plans to pursue the license from the State of Maryland. There are, however, 33 other States, in addition to Maryland, that have agreements with the NRC and, thus, the authority to issue licenses.

Do you have any idea whether the quality of the review process in those other States is as stringent as it was in Maryland?

Mr. KUTZ. I will let Mr. Aloise add, but I am not aware of that. I know that after we did our operation, NRC immediately held, I believe, a teleconference with all the States to tell them what we did, how we did it, to make sure that they were alerted, which was a positive step, we believe. But I would expect they are not following the exact same process in all 34 States.

Mr. ALOISE. Senator, when we did our report in 2003 for Senator Akaka, we did not survey all the States, but we did come across a number of States that also made site visits. South Carolina and Georgia come to mind. And State officials told us that they thought a lot of other States were making site visits.

Senator COLLINS. I just wonder—and I am very glad to hear the NRC shared the results of the recommendations.

The Nuclear Regulatory Commission I would have expected to have the most stringent of all procedures, but I would suspect that smaller States with fewer resources—a State like mine, for example, which has tight budget constraints and perhaps limited expertise in this area—might not have the kind of intensive scrutiny that a larger State would have.

Could you tell me more about how the Regulatory Commission licenses States or enters into this agreement? Could you tell me more about the process for allowing States to undertake their own licensing?

Mr. ALOISE. They basically have to meet NRC's requirements for taking over the licensing process, and then NRC reviews them periodically to make sure they are still operating the way they agreed to operate.

But, in some cases there may not be all that many licensees involved. It depends on the type of material. In some cases, there are 55 licensees for a specific amount and type of material, and in other cases there are more. It depends on the State, and, you are correct, State resources.

But, again, when we met with the State organizations, most of them thought that they were—or a lot of them were—doing site visits. They believe it is that important.

Senator COLLINS. Are the majority of licenses issued by the 34 States or by the NRC?

Mr. ALOISE. The 34 Agreement States have about 80 percent of the licensees. NRC has about 20 percent of the licensees.

Senator COLLINS. That is what my understanding was. That suggests to me that we should also take a look at how the States implement this. If the vast majority of licenses are being issued at the State level, perhaps we should do some sort of assessment or ask the NRC to do some sort of assessment testing the quality of the State regulatory schemes.

The second issue I want to raise with you, Mr. Kutz, is how you went about counterfeiting the license that you received from the NRC. Did this take any special expertise? Were you able to use off-the-shelf software, or did you have special expertise that the average person would not have access to?

Mr. KUTZ. One of the basic rules when we do these kind of operations is to only use publicly available information, hardware, and software. So what we did, we bought from public sources that anyone could buy from, whether it be the paper or the actual machines that we used.

Senator COLLINS. That was a point that I wanted to emphasize because you were able to do this, it seems to me, very easily, so it does not take access to specialized equipment or esoteric software or a lot of expertise to undertake the kind of counterfeiting that you were able to accomplish. Is that correct?

Mr. KUTZ. Yes. Well, not only that, we probably were much more sophisticated than we needed to be because at the end of the day all we had to do was fax this to a supplier. And, a fax copy is not as good as an original, so I think a cut and paste would have potentially even worked because over a fax you are not going to know the difference.

Senator COLLINS. That is true. Yes, Mr. Cooney?

Mr. COONEY. I would like to add that this particular license is really very easy to counterfeit. As you know, you can counterfeit anything. However, the NRC license in particular has really no security features in it. It has no watermarks. It has no microprinting. It has no holograms. So it begs the question to be asked even if there are any real counterfeits out there that we do not know about because it was such an easy item to reproduce.

Senator COLLINS. And that raises an important question as well of whether the Commission ought to be reviewing licenses that have been issued and do some sort of security check, given how easily you were able to counterfeit it.

Is there a role here to be played by the suppliers? You talked about that you faxed the counterfeit license to two suppliers, and the amount that you were able to order far exceeded the amount that you were licensed for. Is there a role for suppliers in reporting back to the Commission when there is a purchase? Is there any feedback loop that might allow the counterfeiting to be identified through the supplier providing information to the Commission?

Mr. KUTZ. Yes. I would mention on the other one that NRC has said they are going to do a lookback to see if there are counterfeit licenses. Back to your prior point, I believe they are going to take a shot at looking back to see if something has happened in the past.

With respect to suppliers, the interesting thing about the suppliers is that what they cared about the most from us was doing a credit check and whether we could actually pay for what we

wanted to buy. They were not as concerned—I mean, they assumed that since we had this license that it was genuine, and so they did not have any means to determine that it was not. So the web-based system that has been discussed would seem to me to be one of the solutions for the counterfeiting because again—and we found this, again, in all the operations we do when we are dealing with things like this. Entities like this, and I think Mr. Cooney can explain to you how disappointed they were when they found out that ours was not a legitimate order. This was big to some of these small businesses, so they were most interested in getting the business. The security feature was not that important to them.

Senator COLLINS. Thank you. Thank you, Mr. Chairman.

Senator CARPER. You bet.

Gentlemen, thanks very much for your testimony and for your work. I was sitting here just thinking that I am glad GAO is on our side. We appreciate your efforts in this matter.

Senator COLEMAN. Mr. Chairman, could I ask one follow-up question?

Senator CARPER. Certainly.

Senator COLEMAN. Were you going to dismiss the panel?

Senator CARPER. No. I am going to ask some questions.

Senator COLEMAN. OK. I thought you said you were done.

Senator CARPER. Oh, no. Just warming up. [Laughter.]

I want to go back to the last point that Senator Collins was making. The suppliers, the potential suppliers, the willing suppliers here, they are in this to make money like most businesses. Their primary responsibility certainly is not to safeguard these materials and to make sure that they are secure and do not fall into the wrong hands.

I do not know if you have talked to the suppliers themselves. Do they feel any compunction at all with respect to—or any concern at all about these materials falling into the wrong hands? Or do they just figure show me the license, we believe you are good to go, send me your money, we will check your credit, and it is a done deal? What is their approach? What is their mind-set? Mr. Aloise.

Mr. ALOISE. Well, that certainly describes the two we are talking about—we just dealt with the two in this test. I think Mr. Cooney can elaborate. They were interested in the size of the business and getting our money.

Mr. COONEY. They were disappointed that they did not get our business, of course. However, when we spoke to them afterwards, they stated that they followed all their procedures that they were mandated by, and they——

Senator CARPER. Mandated by whom?

Mr. COONEY. By their own internal protocols. But they felt that the NRC should guarantee in some way the license presented to them. They are looking at NRC to say that the license is good. It should not be on them, the business, in their defense, to have to determine that the person is legitimate if he possesses and presents them with an NRC license. They are assuming that the license is OK, and they are assuming that NRC has granted it under legitimate means.

Senator CARPER. I would say to my colleagues, that reminds me a little bit of the immigration debate with respect to employers, knowingly or unknowingly, hiring illegal aliens.

Just a word or two, your thoughts with respect to the adequacy of their internal procedures for the suppliers. Any thoughts?

Mr. KUTZ. Well, again, from a security standpoint, I think there is more that needs to be done. They were not really going to challenge anything. We could have done a much less elaborate process, taken a license off of the web page, the web basically, just counterfeited it and faxed it to them and potentially gotten the materials. So they really did not have a mechanism in place at this point. That is why, again, I think this web system has potential for a place where they can go from a secure perspective to determine whether the people they are dealing with are genuine and that the amounts that we are asking for are within the guidelines of the license that we have.

Senator CARPER. Mr. Cooney, you mentioned that the suppliers were disappointed not to be able to make the sale. Were they willing to offer quantity discounts to GAO?

Mr. COONEY. Yes, and in their quotes they gave us quite a discount based on volume.

Senator CARPER. All right. Thank you.

Mr. KUTZ. They actually offered us twice as many machines as we requested, so when we requested the first set of machines, we actually got a quote back for twice as many machines as we had actually requested.

Senator CARPER. I would just say to my colleagues as an aside, I have been over in Iraq and Kuwait looking into contracting, some of the military contracting that goes on, a lot of them no-bid contracts, and we are paying a lot more money for stuff than we ought to be. We ought to put these guys to work on this and get them out there to get us some better deals on the legitimate contracting side for the Department of Defense. I say that with tongue in cheek not entirely.

Mr. Aloise, the GAO identified a vulnerability that could be exploited to obtain nuclear materials, but just to be clear, are there any sort of guidelines used by the NRC that govern the amounts of material that could be used in dirty bombs as opposed to guidelines that deal with health and security? Let me just start with that, and then I will follow up.

Mr. ALOISE. NRC probably could answer that better than I could. But I do know that they analyzed the amount we had, for example, to determine the potential consequences of the amount of material we could have gotten. They are very capable of doing that.

But, again, our point is that the point of a dirty bomb is not its scientific aspects, or the amount of material that is being used, but the socioeconomic effects of the dirty bomb.

Senator CARPER. All right. And to follow up, I believe NRC has focused on Category 1 and 2 quantities, larger quantities. How do these quantities differ from the quantities of material that GAO was aiming to obtain or could have obtained?

Mr. ALOISE. Well, Category 1 and 2 materials require more stringent controls. They are more dangerous so obviously they have

more controls. However, we think, if we had pursued this further, we probably could have got up to Category 2 levels.

Senator CARPER. Do I understand that Category 4 is the lowest, the least——

Mr. ALOISE. Category 5 is the lowest.

Senator CARPER. OK. And you were lining up to obtain—get somewhere at a low level Category 3?

Mr. ALOISE. I think we reached the bottom of Category 3.

Senator CARPER. Thanks very much.

Mr. ALOISE. I might add, Senator, we have surveyed other countries and how they track materials. We surveyed 20 countries in another report. Fourteen of those countries track at least Category 1 through 3 quantities of materials. NRC is right now concentrating on Category 1 and 2. And nine of those countries track all the way down to Category 5. So other countries take this seriously as well.

Senator CARPER. Good. Well, I suspect we will, too, in the future thanks to your work.

Let me talk with you for a moment about stolen materials. We are discussing here today the prospect of a real company, a supplier, a legitimate company, being willing to make a sale in this case to a sham operation that you guys started because you presented what appears to be a legitimate license and request for that material. What do we know about the safeguards that are in place to prevent materials from being stolen that might be stolen from a legitimate business. They could be from someone maybe who works for that legitimate business or simply just stolen from a business from the outside. Can you help me on that?

Mr. ALOISE. Of these devices we are talking about, I think our report in 2003 said that over a 5-year period there were about 1,300 of these devices stolen in the United States. About 250 a year were stolen, lost, or abandoned. NRC reports that most of those were reclaimed. A lot of these are left at a construction site. Those kinds of things occur. But they usually take prompt action, and once they are notified of that and try to get it back.

Senator CARPER. All right. I have a couple more questions, but before I ask those, let me just yield back to Senator Coleman. Or, Senator Collins before she walks out of the room, do you have any other questions you would like to ask of this panel?

Senator COLLINS. I do not. Thank you.

Senator CARPER. OK. Senator Coleman.

Senator COLEMAN. Just actually a quick follow-up to Mr. Cooney. The difference between the interview—the site visit versus an office interview. I know my staff has been talking to the NRC about this, and I think they would say that—first of all, they are Ph.D. reviewers who review these applications, and I think they may say that those reviewers would "eat a phony applicant's lunch" in an interview, that they would be able to spot them in the interview. Do you think an interview with an NRC regional office would have exposed you or blown your cover?

Mr. COONEY. Senator, I am quite confident, having dealt with the gentleman I dealt with in the review process, that had I met him on a one-to-one basis I could have got through the process fine. Early on in our discussions, I determined that he was more inter-

ested and focused on the process of how to fill out the application rather than to determine the legitimacy of my use for the application. So I believe with the training that I had online, taking the RSO course, and my learned experience on the machines that we received through the Internet, that I would have been able to successfully get through that interview. And also, as you know, Senator, last year on the other case we did coming across the border, we were also face to face with law enforcement people, and we got through there also.

Senator COLEMAN. And in that case, the good news is they found the materials; the bad news is that after they found it, with phony documents you were able to get it through.

Mr. COONEY. Correct.

Senator COLEMAN. And so, Mr. Kutz, I go back then to the difference between an office visit versus a site visit. You are of the opinion that a site visit would be a much more effective way to discover whether something is bogus or not?

Mr. KUTZ. It would be the most effective way, yes.

Senator COLEMAN. Absolutely. Thank you. Thank you, Mr. Chairman.

Senator CARPER. You bet.

Gentlemen, let me ask you a couple more questions and then we will excuse you and bring on our second panel. I would like to have us discuss NRC's responsiveness to your investigation, to your sting operation. I find it troubling that ICE apparently cited concerns in, I think—was it 2003? And it took NRC some 3 years to improve their licensing process. After they had done that, it took you all about a month or less to, I guess, thwart the newly improved process.

In your mind, was it legitimate for NRC first of all to take 3 years to respond to your initial concerns? And how long should it take the NRC to respond fully to the concerns that you have raised, I guess to the lessons learned and the recommendations that you have made? How long is long enough?

Mr. KUTZ. Well, I will respond first. With respect to what it appears, the first step was a good step requiring a site visit or an office visit. What they have done on the training front we do not know. But the one that looks like it is going to take the longest is the web-based system, which they now say is 2009. And whether there will even be an implementation period over several years, that could even be further than that, so added years.

Senator CARPER. How would that web-based system work?

Mr. KUTZ. Well, one element of it could be related to the suppliers you talked about. The suppliers could get a secure way to get into that system to determine within a matter of minutes whether someone ordering materials from them has a genuine NRC license and whether or not they are authorized to purchase the type of materials that they are submitting an order for. That has potential to deal with the counterfeiting issue. But that is several years away.

Senator CARPER. I do not pretend to be an expert about these things, although I did spend last night in a Holiday Inn Express. [Laughter.]

Not really. I spent last night at home in Wilmington.

Two years seems like a long time to put up a system like that to a lay person. Your thoughts? You guys maybe know more about this stuff than I do. You probably do.

Mr. ALOISE. Senator, again, we made this recommendation in 2003. We are not clear on why it took 3 years to address it, and then address it with procedures that we were, as you point out, able to beat in 28 days.

I know NRC will argue with this, but in our view, they do not take the threat of these materials as seriously as we and others do. It is not that they discount the threat. I am not saying that. But if they took it as seriously as we did, they would have closed this gap in less than in 3 years.

Senator CARPER. All right. I think I am going to stop there, and let me just conclude. Senator Coleman, my understanding is that this is an issue you had more than a little bit of interest in over the years, and I commend you for that.

I especially want to commend our folks at GAO for the work that you have done in this regard, and I look forward to our next panel to hear from the NRC to hear their side of the story and what they have been doing in response to your recommendations.

I would just close this first panel by observing that this is a different world than we live in today, different from the kind of world that we grew up in and even the kind of world that we had when I was Governor of Delaware and about to come here to the U.S. Senate in 2001. Like it or not, our world has changed, and the nature of the threats we face has changed as well. We have to be more vigilant when we make mistakes like we have here, and those mistakes have been identified, and we have got to act promptly, with dispatch, to address them.

Thank you for your work in this regard, gentlemen, and we look forward to continuing to work with you in the years ahead, and we also look forward to our next panel. Thanks so much.

Commissioner McGaffigan, I am going to ask you to rise and take an oath, please. Do you swear that the testimony you will be giving before this Subcommittee will be the truth, the whole truth, and nothing but the truth, so help you, God?

Mr. MCGAFFIGAN. I do.

Senator CARPER. Thank you. Please be seated.

Commissioner McGaffigan, it is always good to see you. Today I am glad you are here, but I wish you did not have to be here. I wish, frankly, none of us had to be here. But since this issue is before us and I know this is an area that you have a lot of interest in and a lot of background, we are pleased that you could be here to respond on behalf of the NRC.

You will be recognized for 10 minutes, and I would ask you to begin your statement. Once that is completed, we will probably be calling on Senator Coleman for questions and then Senator Akaka.

Thank you. Please begin.

TESTIMONY OF EDWARD MCGAFFIGAN, JR.,[1] COMMISSIONER, U.S. NUCLEAR REGULATORY COMMISSION

Mr. MCGAFFIGAN. Thank you, Senator Carper, Senator Coleman. I am not going to go through my full statement because I want to save some time to talk about some of the issues that have been raised.

The early part of my statement, my background section, was intended to convey what we believe we have done since 2001 to deal with the dirty bomb issue. We feel that we have been a world leader on almost all of these things. The Code of Conduct renegotiation that occurred in 2003 was heavily influenced by an NRC DOE report. We got the right radionuclides and we got them in the right quantities in defining Categories 1 and 2 in the Code of Conduct.

We did not wait 3 years, as one of the slides will show, to implement the 2003 GAO recommendation for high-risk sources in Categories 1 and 2. We did that starting in 2003, I believe, with the large panoramic irradiators and continuing in 2004 with manufacturers and distributors and then broadening it further in 2005. So for high-risk sources, this sting would not work. For high-risk sources, if you are trying to buy a gamma knife for a hospital, if you are trying to start a large panoramic irradiator to sterilize medical equipment or food, a sham company would be caught instantly. And a sham company would have been caught instantly a long time ago. We give those applicants very tight scrutiny.

GAO did find a flaw in our system, and we, as soon as we understood it, dealt with it. NRC has the interim guidance that the GAO witnesses have described, and they believe that guidance solves most of the problem, and I can talk about the mandatory site visit perhaps in questions or later.

We appreciate GAO telling us about this vulnerability in late May and early June of this year, and almost immediately we took some initiatives, and within 2 weeks we had interim guidance that we really think solves the problem in the short term. We have longer-term solutions like this web-based licensing that we are aiming to do, and going to Category 3 sources is something that we are studying. I personally favor it, but to do rulemaking in this country, we have to follow the Administrative Procedures Act, and we have to have data. And we are gathering that data.

I suggested last year in one of my votes that we not just go to Category 3 sources but we go to one-tenth of the lower end of the Category 3 threshold, which would be a factor of 10 above the top threshold of Category 4. And only if I go to that, to one-tenth of Category 3, would I have caught this particular sting by GAO.

So we are serious about this stuff. Most people in the world regard us as a world leader. I cannot imagine any country having the resources that the GAO witness just suggested to follow Category 5 sources. The number of exit signs in America, the number of home smoke detectors in America do not lend themselves to that degree of scrutiny. So these countries have to have exempt levels, and they have to have levels where they provide minimal attention, or else they are literally following hundreds of millions of devices.

[1] The prepared statement of Mr. McGaffigan with attachments appears in the Appendix on page 50.

The NRC, as I said, took this seriously. We have a game plan to go forward. We intend to expand our scrutiny of source security issues to lower-risk souorces, but we clearly in the past few years have had to work on first things first. We have to work on the gamma knives and the large panoramic irradiators and other high-risk uses of these materials.

I would say that one of the points made—and we are guilty ourselves in this point. One of the points made by GAO in their 2003 report was that there are hundreds of sources lost every year. Dealing with Americium, for example, the threshold in the NRC quarterly report for determining whether a lost source must ve reported in 30 days is ten-billionth of a curie. The threshold for reporting a lost source immediately is one-millionth of a curie, the amount in a smoke detector. These are quantities that are not relevant to dirty bombs, and the Commission has very recently directed the staff in the future to use Code of Conduct category levels to report these sorts of events. The fact is that in the last 11 years that I have been with the Commission, the only high-risk sources that have ever been lost and not recovered are devices used in oil and gas exploration using iridium–192, a radionuclide that has a relatively short half-life of 74 days.

The number of those sources lost and not recovered is in the handful in the 11 years I have been at NRC, and because they have such short half-lives, you just wait a while and they decay away. Sometimes they are lost in the Gulf of Mexico. Sometimes they are lost in deep waters. And they are very hard to recover. So we do not lose significant sources and not recover them. Even small sources such as moisture density gauges—when they are lost, we or the State do everything we can to recover them rapidly because somebody could, if they unshield the material, get themselves a significant dose, and we do not want that to happen.

One other point I want to make. We talk about dirty bombs as being "weapons of mass disruption." I personally think that we contribute to that, that this psychological fear that we have is a combination of threat inflation on the part of the terrorists' capabilities, combined with lack of knowledge of real radiation effects, and I can go into that in the questioning. But we should not aid and abet terrorists by fearing things that are the equivalent of working in the Capitol or in the Library of Congress where you can get 100 millirems a year, or the radon in your home, if you have not ameliorated it, can give you 400 or 500 millirems a year, or getting a CT scan of your chest and abdomen, which might give you 2,000 millirems in one dose. The American people I do not think are that fragile. Franklin Roosevelt said, "The only thing we have to fear is fear itself." We have to do a better job of having a dialogue with the American people about which of these threats is severe and which are not. And in this instance, I honestly think that we have people who hype threats. On one of the TV news shows last night, there was a fellow who is always hyping threats who wants to clean up things to one-millionth of background radiation.

That would not be sane public policy. If we can have a dialogue, it should be about the Department of Homeland Security's guidelines. The Department of Homeland Security has put out protective action guidelines for what happens after a dirty bomb attack.

Those guidelines were strongly supported by the States. They are strongly supported by us at the NRC. They are supported by EPA. They are derivative of EPA guidelines.

If we can follow those guidelines during an RDD event, there will not be the sort of panic that everybody assumes. We have done one exercise. In 2002, TOPOFF II, a very senior exercise of the U.S. Government, looked at a very large dirty bomb, factors of 1,000 or 10,000 larger than the material GAO was able to potentially procure. And the mayor of Seattle, where this bomb was assumed to go off, was given a choice of following the then-EPA, the now-DHS Protective Action Guides, or letting his city be paralyzed potentially for years to try to get to perfection cleaning it up to one-tenth of the dose in the Capitol, in the entire city. He chose to put his city back to work. He chose to restrict the very small area that had been contaminated to a large degree and where it really was unsafe to be there, people would get more than a CT scan of their chest and abdomen if they were there all year. And that is the EPA PAG.

I know my time is expired, and I hope I have said a few provocative things. But we have to have a better national dialogue about dirty bombs than we have had thus far.

Senator CARPER. Commissioner McGaffigan, thank you for contributing to that dialogue this morning with your statement and for your willingness to be here.

I need to slip out and go meet with Senator Voinovich, ironically, and so I am going to turn the gavel over to Senator Akaka. But before I do, I will just repeat something I have said to you and to the other members of the Nuclear Regulatory Commission before. Everything that I do, I know I can do better. And I always say to my staff, "Everything that we do, we can do better." I said that as Senator and as governor and any other roles I have played. The same is true with the NRC, as you know, and to the extent that we have identified some weaknesses here, things that need to be corrected, we expect you to address them. We realize there has to be some priority. Those that are most acute we need to address most readily. Those that are least critical we can address later. But to the extent that we in the Congress can be of support to you, and particularly Senator Voinovich and myself—I think I can speak for him as well—you need to let us know because we want to make sure these concerns are addressed.

Mr. MCGAFFIGAN. Sir, as you know, that has been my philosophy since I came to NRC. We have constantly improved and we have not reached perfection. We are going to make things better, whether it is in our oversight process for reactors or any part of our business.

I would tell you that the greatest challenge we face with these information technology systems such as web-based licensing is getting the right people to work for us. It is almost impossible on government salaries to get the people that really are information technology experts. We are the best agency in government in many respects. We have been voted that.

Senator CARPER. I know.

Mr. MCGAFFIGAN. But we are one of the worst agencies in government at buying information technology.

I do not have a solution to that. We go out and we try to attract people at the senior level service level, which is what I get paid, and we have trouble. We are obviously not unique. The FBI, the Pentagon, the FAA, and others have had enormous difficulty in this area. But we try very hard to attract the right people. The government hiring system—they can get paid so much more in the private sector if they are really good. We someday have to have more flexibility in the government system than we have today.

Senator CARPER. All right. Thank you for that comment, and with that I am going to recognize Senator Coleman for questions and pass the gavel over to Senator Akaka. Thank you so much.

Senator COLEMAN. Thank you, Mr. Chairman.

Mr. McGaffigan, let me just start by identifying three areas where I am in agreement, and I think it is important to stress your first comment about tracking Category 5 and the difficulty, just some practical limitations we have here.

The Subcommittee staff report, which focuses on Category 3, says the NRC should consider including Category 3, and we use the word "consider" very carefully rather than "require." We want you to look at that. That needs to be looked at. The fact that 14 other countries apparently do that I think carries some weight. We recognize that certainly at Category 4 and Category 5 it may not be cost-effective. But as you look at Category 3, that is the issue here, and so "consider" is the word, and we hope they have fully considered that.

Mr. MCGAFFIGAN. Sir, we will. Category 3 sources are dangerous, as I have said in my votes on these issues over the years. And I would like to expand, but you have the Administrative Procedures Act that I am sure this Committee decades ago put into law, and we have to have the data to prove that benefits exceed costs to start that rulemaking.

I believe we will get that data, and as I say, I personally would go to one-tenth of Category 3 in terms of the licensing so that we would have greater defense in depth in that area.

Senator COLEMAN. The other area of agreement I want to mention in is the concern over getting technical folks, IT folks, to change systems. I had a conversation yesterday with the Commissioner of the IRS. Why can't we, for 501(c)(3)s, which has been taking up to 6 months to look at an application, why don't we have a web-based system to deal with that? And the answer was just what you said: It is difficult to get folks who are top-notch in IT to do this kind of work, and as a result, they are looking to 2009.

That does not make me very happy. It does not make me very happy at all, and I think we have to accelerate this. But I do want you to know that I recognize the limitations that we are facing, and it is very frustrating.

Mr. MCGAFFIGAN. It is one of the great weaknesses in our system. Why doesn't DOD have a better system for getting security clearances through? Why doesn't the FBI have better ability to share data among analysts? Dealing with information technology, everybody talks about off-the-shelf technology. There is nothing off-the-shelf because it has to fit within the systems that the agencies already have, and it is just very hard. The Federal Information Security Management Act is a very good act. It probably came out of

this Committee. But it is very hard to get contractors who fully understand how to do that.

In the National Source Tracking System, we are working with Lockheed Martin, and you would think that they could do the job and do it well. We are having problems.

Senator COLEMAN. Again, there is a lot of frustration, and we need to accelerate the pace at which we get this done.

Let me raise a third issue, which is kind of the overarching issue, and that is the danger of a dirty bomb. And I agree with you that we have to do a better job of a dialogue with the American people. The concern about a dirty bomb, as you are well aware, is not the death toll from the explosion itself. It is not even the amount of radiation sickness that would occur. It is the psychological and economic impact of radiological material being spread around a public place and the toll that would take. And so I do not think we are in disagreement over that.

The concern that I have here and that this investigation reflected is that there is the ability to at least move into Category 3, and I do not think we have a chart. I am looking at NRC Licensing of Sealed Radioactive Sources, your document.

Mr. MCGAFFIGAN. Yes.

Senator COLEMAN. The IAEA Code of Conduct that identifies Categories 1 through 5 for both-what is it, Americium? Is that how you pronounce that?

Mr. MCGAFFIGAN. Americium.

Senator COLEMAN. Americium, and then Cesium–137. But what troubles me, what concerns me is that Category 2, Americium, is 16 to 160 curies, and Category 3 is 1.6 to 16 curies. In other words, there is a thin line between the top end of Category 3 and the bottom end of Category 2. But there is a bright line in the procedures that the NRC employs in reviewing Category 2 versus Category 3 and tracking Category 2 versus Category 3, and deciding to issue a license to Category 2 versus Category 3.

Do you find that troubling?

Mr. MCGAFFIGAN. I do not think the line is as bright in practice. The particular license that GAO was attempting to obtain was for the lower end of Category 4 of Americium. The lower end of Category 4 is 16 millicuries. They were attempting to obtain a license for 200 millicuries. They were attempting to do so in a State—West Virginia—where there is a very active industry that needs to make sure that when concrete and asphalt are laid that there are not holes in them. I am not trying to apologize for our licensing officer. We should have done better. But it probably sounded like a new small business trying to get into business.

What I am actually more concerned about is the other two suppliers. There is a very limited number of suppliers of these moisture density gauges, and asking for 45 at once for a new business you have never heard of before, there should have been some bells going off. It should not have been, "Oh, my gosh, I am going to make a quarter of a million dollars on this sale," which is probably about what they were quoted. I do not know the exact quote. Maybe my GAO colleagues could tell you. Instead of getting excited about, "Oh, my God, somebody is buying a quarter million dollars in gauges. It must be the biggest firm in West Virginia that some-

how just landed on the Earth," they might have asked a question or two. They might have called back to us, and we are going to reinforce, I believe, the guidance to those folks and the manufacturers and distributors that we want to know about such transactions, please call us.

But, yes, we have to have greater defense in depth in our system, and I would add to the points that are in my testimony that we are going to have to do a better job with these manufacturers and distributors to make sure that they are not putting the dollar ahead of the American people.

Senator COLEMAN. One of the concerns, the highlight of the investigation, is, "Does the right hand know what the left hand is doing?" So in this case, you have suppliers who saw a profit with no requirement to authenticate licenses where the web-based system would. What can you do in the short term to ensure that if, in fact, there were a terrorist group that was well funded that looked at the system and said, "Hey, right now, at least before any changes, we could go to a multiple source of suppliers." By the way, not just in West Virginia. Could they have gone to other States?

Mr. MCGAFFIGAN. The company was an alleged West Virginia company. The suppliers are limited. There are not a lot of people who try to make money off—there are essentially two, right?—two companies that they sought bids from. There are not a lot of other companies in this business.

I do have some trouble with the notion that they could have accumulated 450 of these gauges. If that supplier is so profit-motivated that they would sell 450 moisture density gauges, which is probably about as many as could possibly be used in West Virginia, Virginia, and North Carolina in this business, I think—I would hope that they might give us a call. But we will enforce that. We will reinforce that through messages to these people in the future.

Senator COLEMAN. Because the concern is not limited to just one source. The GAO folks are figuring that it is pretty easy to get a license here. In fact, they think they could have just created one by just going on the web. And then you are going to fax it, so now if you could do it for this item, you could probably do it for another item or another item.

Mr. MCGAFFIGAN. There are a limited number of items in Categories 3 and 4 that we have to be careful about. We are going to look at that.

Senator COLEMAN. That is what I am looking for. In other words, even pre-web-based systems, I would hope that what we would see would be a lookback with suppliers and others so that you cannot simply counterfeit a license, change the quantity of material you are authorized to buy, and then go to various sources to get that, to give you then the capacity to do something that could be devastating if used by bad people in a bad way.

Mr. MCGAFFIGAN. We have been looking since February—and I should have, before coming here today, gotten updated as to what data we have, probably not full at this point. But we have been looking at these devices that are a factor of 10 below the Category 3 lower threshold, a factor of 10 above the Category 4 upper threshold. And we need to just understand how these radionuclides of concern are used in real devices in those categories and how

much of a burden it is going to be to deal with. I suspect the burden is not going to be large, and we probably already have interim data, and I would be happy to share that with you once we fully understand it.

I do also want you to understand that getting this material does not get you an effective dirty bomb. We design these moisture density gauges so that the Americium inside is encapsulated in two different layers so that people cannot get at it easily, cannot hurt themselves. GAO would have had to taken the material out of those 45 devices, gotten through those two layers. They would best do that with at least some sort of glove box where they are protecting themselves, or else they will kill themselves. And then they would have to figure out how to disperse it optimally.

From what I have seen of al-Qaeda thus far—there was a lot of reference to this 2004 paper. That 2004 paper is scientifically inept, to be honest with you, and I hope al-Qaeda is still there. It may not be. And we do not assume they are inept. But it does go to this issue of—there are several steps they have to go through to get to a dirty bomb, and then the effectiveness of that dirty bomb is something I would be happy to talk about.

Senator COLEMAN. I have some other questions. What I will do, since I am over my time, Mr. Chairman, I will end this line of questioning and, Senator Akaka, I would like another opportunity then if we could just have a second round. I have some follow-up questions.

Senator AKAKA [presiding]. Fine. Thank you very much, Senator Coleman. We will have another round after this.

Commissioner, you mentioned something about staffing, and I would like to ask about NRC staffing and, in particular, the types of people you hire. We have heard from GAO that NRC license reviewers could easily be fooled by a sham company even in person. Do you believe it is time to hire NRC staff with other skills that enable them to assess the less tangible aspects of a license request?

Mr. MCGAFFIGAN. Sir, I believe we have one of the most competent staffs in any agency in the Federal Government. You have a staffer who once worked for us, and we have had very high hopes for her. We are the training ground for a lot of other agencies, and we have been named the best agency in government.

Because we have such a challenging mission, we tend to attract some of the best and brightest in our population. The numbers of PhDs and master's degree holders in our staff would match any other agency in the government. So it is not a matter—we just got fooled in one case, and we will probably never get fooled again. The GAO staffer might have gotten past that person in our Region I office near Philadelphia. I have my doubts. But that is an experiment that was not done.

Getting past that person today in an office visit will be enormously harder, and "once bitten, twice shy," as the old saying goes. NRC staffers are not going to get burned a second time with that particular scam. Our people are going to be very alert to it. The issue is, and what I commit to in my testimony, is we are going to do more red-teaming of ourselves in this area. We are going to look at our own vulnerabilities. We are going to be more vigilant on these lower-risk sources. And we intend to try our absolute best

to find vulnerabilities and fix them before GAO points them out to us in the future.

That is not a challenge to the GAO, but that is—— [Laughter.]

Mr. MCGAFFIGAN. But that is what our intent is, and we have various ideas. The Chairman has some ideas about bringing DTRA, the Defense Threat Reduction Agency, in to look at our licensing process. We are going to red-team ourselves more seriously.

I do not think we have vulnerabilities—I hope we do not—at the top end of the spectrum because we have so much defense in depth there. But we have less defense in depth on these lower-risk sources, and we are going to find our vulnerabilities. That is a commitment.

Senator AKAKA. Well, as you heard, GAO identified a troubling vulnerability.

Mr. MCGAFFIGAN. Yes.

Senator AKAKA. On the other hand, the use of radioactive sources is a necessary aspect of everyday life. We use these sources in medicine, as you mentioned, at hospitals and what we might call common places for diagnostic and cancer treatments and a wide variety of industrial uses.

How do you balance and how does Congress balance the need to use the sources without significantly increasing costs and yet ensure that dangerous quantities of those materials are not easily available for use in a dirty bomb or other sources here?

Mr. MCGAFFIGAN. Senator, that is a very good question. There are some very complex cases I could give to you. We will not let anybody use cesium in a large panoramic irradiator. We absolutely will not let them do that. There is an ongoing National Academy of Sciences report that is looking at smaller blood irradiators used in hospitals throughout the Nation. There are two blood irradiators at George Washington University Hospital a half-mile from the White House where the Vice President goes for care. Those are Category 2 sources under the Code of Conduct, and we have increased security on those sources.

But the dispersability of the cesium–137 within them is a question—it is something that we are trying to fix. There are ways that we can make those sources more secure, less attractive to terrorists. But there are potentially tremendous costs involved for the hospitals and for the manufacturers, and we have a National Academy of Sciences study due to the 2005 Energy Policy Act where they are trying—and they are going to report to us in September. They are trying to balance that cost/benefit calculation. How do we make small improvements, perhaps, at low cost to make those blood irradiators much less attractive to a terrorist?

These are not easy issues, and we struggle with that routinely. Our bias is toward security, where security is effective but not overly costly. We do not protect the blood irradiators with guards and guns and gates and sensors. We protect them with a much tighter connection with local law enforcement. The hospitals today in a post-September 11 world have recognized this vulnerability. We have told them how to put extra sensors in. But we have also told them we are not going to have gun battles at George Washington University Hospital. We are going to make sure that you

can summon the police, a lot of law enforcement real fast, if somebody tries to come in and attack those blood irradiators.

It is a balance.

Senator AKAKA. Well, you mentioned, Commissioner, that the American public needs to understand better radiation, what it is and what are the effects of that. How do we, how does Congress, how do you, and how does the NRC do this?

Mr. MCGAFFIGAN. It is something that every agency in government that deals with radiation, not just us but EPA, Health and Human Services, the Department of Homeland Security, and DOE, could do a better job at. EPA has a website where you can go and find out what extra dose you would get if you move to Colorado, which has much more uranium and thorium in the soil and you get much higher doses from that. In Colorado, it would also tell you that you would get a little bit of a higher dose from the altitude. It would tell you the extra dose if you live in a brick house as opposed to a wood house, or the extra dose from granite tabletops in your kitchen.

But it is a dialogue that does not happen—it is pretty boring information. Should you have your home tested for radon? Should you accept your doctor's judgment that you should get a CT scan of your chest and abdomen? Should you avoid the Capitol? Senator, because you go back to Hawaii so often, you get a very large dose flying from here to Hawaii. The most exposed people in America, on average, in a large group are not the people who work at nuclear power plants. They are the people on airline crews who fly long distances. They get doses per year that are in the hundreds of millirems range, and we do not even badge them. In Europe they do. But we have not had this conversation with the public. I can tell you my personal view and what NRC regulates to and what other agencies regulate to. The annual dose for workers is 5,000 millirem. That is our limit. A CT scan of the chest and abdomen is about 2,000 millirem. The average medical dose of Americans is about 340 millirems per year for diagnostic procedures. When your child gets braces, they will probably get about 50 millirems when the whole-mouth x-rays are done in preparation for the braces being placed. In the Capitol and the Library of Congress, where there is lots of granite, people get 80 to 100 millirems per year if they work 2,000 hours, the typical work day, and most people work for longer in the Capitol.

When my son was a page for Senator Warner back in 2001 before September 11, in the spring of 2001, we mapped the Capitol using a radiation detector, and Tom Daschle's office was the hottest place we found. Just outside of his office at the time, it was about 40 microrems per hours.

So what is a dangerous amount given that we live in a radioactive universe? That is the way it was created. It would not exist if it were not radioactive. And what is a dangerous amount? There are different views on that, and the government has a view, EPA, NRC, DOE, Health and Human Services. But certain other members of the public have a starkly different view, a much more alarmist view as to what happens if you take a plane flight or if you work in the Capitol, I guess. And the media tends to believe the truth is somewhere in between. One of the TV shows that I

was on last night—I was on two TV news shows last night very briefly. That increased my total number of career TV news appearances to three. I had been on TV once before in my career. But the media tends to believe the truth must lie somewhere between what the government experts say, who obviously love gamma rays in their lives, and these alleged experts, one of whom was on one of the shows I watched last night, one of the TV news shows. And that person truly believes that we have to clean up Mother Nature, I believe, that we should get down to hundredths of a millirem per year doses when we clean up things.

So there is a difference, and I hope that in an emergency, as the mayor of Seattle did in 2002, in the Top Officials 2 exercise, that the mayor of Seattle will listen to the Federal Government experts and will try with the help of the State of Washington experts who were totally with us, to persuade the public that the risks they are taking are not large if they follow the Department of Homeland Security and Environmental Protection Agency guidelines. I hope that that will be the result.

Senator AKAKA. Well, thank you. I am going to pass it on to Senator Coleman for further questions. I will follow up after he is done with more questions.

Mr. MCGAFFIGAN. OK.

Senator AKAKA. But here is one that can speak from the mayor's perspective.

Senator COLEMAN. And I thank you, Senator Akaka. As a former mayor, these are issues that we have to have a better conversation with our citizens about because, at some point in time, this country is going to experience a dirty bomb attack. I cannot tell you this year or next year, but that is the world in which we live and the nature of the threat, and we cannot stop every bad thing from happening to us. And so it is all about how we respond and prepare.

And perhaps out of this conversation, Commissioner, there is a dialogue that will help in that discussion.

Mr. MCGAFFIGAN. I agree. I once tried to talk to the National Governors Association and I got blown off, several years ago, not exactly on this subject but on radiological threats. But the National Mayors Association, if they come to Washington, maybe we should have not me but Craig Conklin, say, from the Department of Homeland Security, who led the effort that resulted in the Department of Homeland Security's guidance, talk to them so that we are talking not in the middle of a crisis, but we are talking to them about our recommendations as the Federal Government and we are talking to mayors.

The trouble is that the radiation experts are oftentimes many layers below the elected official, and they may agree with us, but they get to see the mayor never or once every 4 years.

Senator COLEMAN. I will work with you and with the NRC to make that happen.

There are two areas I just want to follow up on. How many Category 3 licenses does the NRC issue during the course of a year?

Mr. MCGAFFIGAN. Well, we issue a total of 200, and Category 3 portion has got to be a very small number.

Senator COLEMAN. I want to get back to this issue of site visits. Why not simply say we are going to do site visits for Category 3 licenses, as Maryland does?

Mr. MCGAFFIGAN. Well, the data—we could do site visits. When we are doing applications, whether it is with power reactors or with Category 3 licensees, we tend to try to put the cost on the applicant rather than on the American people. But we could probably do that. It is probably a relatively small reprogramming of money. We will take that into consideration.

The number of site visits to applicants seeking Category 3 material or even a factor of 10 below Category 3, well into Category 4, which would have been needed to get this particular application that the GAO put before us, the fraudulent application, is probably not a large expenditure of money, and we will look at that.

We may get pushback. We have 34 Agreement States. Some of them are very large, and they may find other ways to check the bona fides of applicants. Some of these large States—I worked for Senator Bingaman from New Mexico. They are large but it seems everybody knows everybody. And there are ways to check out people without necessarily making the visit. And our budgets, NRC budgets, are more generous than many of these State budgets.

We have to talk not only about our own actions but the actions of 34 other States. My understanding is, for your information—and it is probably not good for you—is that Minnesota was following our guidance in this area prior to the GAO sting—which made the visits discretionary. And our information is only five States that we have thus far gotten an answer from—including Maryland, act like Maryland and do mandatory visits. And they may be the more compact States.

So we will consider your recommendation and see where we go with it. For the NRC it is possible.

Senator COLEMAN. Let us have that conversation because I think it is clearly worthwhile. Again, we want to get as close to perfect as we can. There is not a lot of room for error here, and I do appreciate your reflection that fooled once, shame on you, fooled twice, shame on me, that clearly the level of alert has been raised and the warning levels have been raised. But I think systematically we should have something in place that moves us as close to perfection in this area where the risk of failure can be so great, so catastrophic.

I just want to make one other comment. When you talked about the technical capacity of al-Qaeda, you did not diminish it, but you did question it. We're talking here about what it would take to move this material into a dirty bomb. I just have to say, knowing what we are dealing with in Iraq today with IEDs, the Defense Department asked for $6.4 billion in February of this year to counter-IED's, to counter the technological abilities of folks on the ground in Iraq. And I can tell you, having been there a number of times, we move to Level A and they go to Level B, and we go to Level C and they then go to Level D. And I think it would be a terrible mistake to underestimate the technological capability of this enemy. It would be a terrible mistake. And all you have to do is look at what we are dealing with, with IEDs, to understand the

simplicity and complexity coming together and the devastating impact of that.

So I just want to put that statement on the record.

Mr. MCGAFFIGAN. I appreciate that, Senator. I spent most of my career—I have been in government for over three decades—working on defense issues. We also have to guard against threat inflation. During the Cold War, inflation of the Soviet threat, the notion that the Soviets could march to the English Channel at a moment's notice and overwhelm NATO's capabilities was never real. They did not have the sustainability to do that. They did not have the cohesion. They did not have the training. But it was a tenet of our policy and it consumed large amounts of money to beat that threat that was being grossly exaggerated.

So we also have to guard against threat inflation. We cannot make these people DOE National Laboratory capable. They have not evidenced that. Jose Padilla thought depleted uranium was something he could use in a dirty bomb, and that is not true. That 2004 paper talked about buying smoke alarms. It would take 2.3 million smoke alarms to get to the amount of material that GAO says it could have gotten. At $6 apiece, maybe you get a discount to $4, that would be pretty large sum of money. And then you would have to go through 2.3 million devices and try to get that little amount of Americium out.

If that is where al-Qaeda was in 2004, sort of surfing the Internet—I am not trying to underestimate them, but they have a learning curve to go through to get to the point where we assume competence. We assume competence in attacking George Washington University Hospital. But we do not assume that they have the same degree of competence that the best National Laboratory would have.

Senator COLEMAN. Again, we will not debate this, but I would think it would be a tragic mistake to underestimate the learning curve. And it is not only al-Qaeda, Padilla or whatever. There are others in this world who do not like us, who have great capacity. The IEDs that we are seeing in Iraq, there is real concern that Iranians are producing highly technical, highly sophisticated weaponry and putting it in the hands of folks who are killing American soldiers. And it would be a terrible mistake to underestimate the technical capacity of the enemies of this country who would have the ability to get radiological material and then to combine it in an explosive device. I really want to stress that.

Mr. MCGAFFIGAN. I understand. If there is state help for the terrorists——

Senator COLEMAN. And there is no reason to assume that this would not be the case in the world in which we are living today. We are seeing it on the ground right now where American soldiers are being killed by highly technical explosive devices that are being used on the ground by terrorists who did not think them up and make them themselves.

Mr. MCGAFFIGAN. Right. We have to go after those countries if they ever do that, and I think we will be able to trace—if there is an RDD or a dirty bomb that ever gets set off in this country——

Senator COLEMAN. And we have to presume that they are capable of doing it and do everything in our power to make sure that

there is not a dirty bomb attack. We have to prevent it rather than just respond to it. We have to assume that the capability is there. And I think that is the correct assumption and that, when the GAO says you do not take it as seriously, you need to take it seriously.

Mr. MCGAFFIGAN. We take it very seriously. If we are up against states——

Senator COLEMAN. But you have to have the frame of mind that we have people who want to hurt us, who have the technical capacity, and assume the technical capacity and then make sure that we do all those things to make it more difficult, more difficult than it was when this sting took place, to get the material and then to inflict the damage. And I just think that is the mind-set that we need and the NRC might not be there yet. My sense, even in this discussion, is that I still think there needs to be a reflection, a greater reflection as to the danger that we face.

Mr. MCGAFFIGAN. If states start aiding al-Qaeda in designing RDDs that, in the case of Americium——

Senator COLEMAN. I will tell you today, Mr. Commissioner, that there are states aiding al-Qaeda. We know that in Iraq.

Mr. MCGAFFIGAN. I understand. If there are states that do that and they use Americium, which is very hard to detect with the detectors that we have at our borders, that is a problem. That is a problem that the NRC cannot solve. Because it will have been brought into America covertly. But that is an act of war, in my view.

Senator COLEMAN. Let us be prepared. I thank you for your efforts, Commissioner.

Mr. MCGAFFIGAN. Thank you.

Senator AKAKA. Thank you very much, Senator Coleman.

I want to just comment that Senator Coleman is correct to remind us that we have a thinking and learning enemy. And when Senator Coleman talks about prevention, it takes anticipation to deal with that and try to outthink or think beforehand what may be coming. I know in our country we do have a lot of young people who are doing so well in this area, and we need to use them well.

Mr. Commissioner, we heard from GAO that suppliers do not believe it is their job to assess the validity of a license or licenses. I happen to disagree. Can you tell me if the NRC has any plans to require suppliers to make sure a licensee or its license is legitimate?

Mr. MCGAFFIGAN. We have given guidance in the past. It probably has been at the Category 1 and 2 level. We definitely need to expand it to these sorts of devices. But we have given manufacturers and distributors very clear guidance in the past that they need to verify Category 1 and 2 materials, the legitimacy of the person seeking to buy, say, the gamma knife for Hospital X.

As I said earlier, I am disappointed. Forty-five moisture density gauges being requested by a company that you have never heard of before should not have just set off dollar signs, $250,000 dollar signs in these people's head. They should have done some checking. That is a lot of moisture density gauges for a start-up company to buy. And if GAO had tried to buy 450, I hope and pray—and they had the $2.5 million to do it—that they would have said, "My God,

this is insane. Something is wrong here," and they should come to us.

There is a limited number of people in the nuclear business dealing with devices at the Category 4 level, and including radionuclides of concern, not things like tritium that goes into exit signs, hear from the NRC. And we need to communicate with them. You are right, Senator Coleman is right. We need to make sure that they are alert and check with us if they have any doubt about the quantities being asked for of such devices.

I do not expect them to call me when someone is buying one or two moisture density gauges, but 45 should have set off some bells and 450 should set off the largest bells we have in Washington. Everyone should be ringing.

Senator AKAKA. Mr. Commissioner, in a March 12, 2007, letter to the Environmental and Public Works Subcommittee on Clean Air and Nuclear Safety, Chairman Klein stated that one of the recommendations from the August 2003 GAO report on NRC control of radioactive sources remained open. That recommendation pertained to evaluation of the costs and benefits of requiring owners of generally licensed devices to apply for specific licenses and whether those costs are commensurate with the devices' risks.

Chairman Klein said that the NRC would start the process of drafting a new rule for fiscal year 2007 that would look at which devices containing radioactive materials should be generally licensed and which were more dangerous and should be more tightly controlled through a specific license.

Can you comment on the status of that initiative and what you believe the results might be?

Mr. MCGAFFIGAN. I mentioned earlier the Commission has asked the staff to look at one-tenth of Category 3's lower threshold and to give us data on how expensive it would be, not just for us but for the 34 Agreement States, to license that.

Generally licensed devices can go down well into the Category 5 range. We ask people to pay annual fees if they use generally licensed devices containing, say, Americium or cesium or cobalt. We are not really looking at going down into Category 5 quantities, even though we sometimes ask people to pay if they have something that is even down in the high part of Category 5.

But we have something underway. Staff is going to give us recommendations. We are in the midst of the data gathering in 2007. I think decisions by the Commission are likely to be made next year. And as I said, my bias is to specifically license to one-tenth of the lower threshold of Category 3, so halfway through Category 4 is my bias as I go into that, as we wait for the data to be collected. That is where we are headed, I think.

Senator AKAKA. When you say general licenses, I wonder whether that would mean you may have less what you may call "specific licenses."

Mr. MCGAFFIGAN. We have general licenses for things that we think are safe. The amount of material in the home smoke detector is about one-millionth of a curie of Americium. We worry down to ten-billionths of a curie of Americium. That is where the threshold is for certain reporting requirements, but despite the reporting requirements, you absolutely do not have to worry about such small

quantities being useful in a dirty bomb. So we expect smoke detectors which are designed to our specs to be safe for your use in the home. We expect the exit signs that contain tritium around here, they have about 10 curies of tritium in them. That sounds like a lot since we have been talking about micro- and millicuries, but you really need about 500,000 or a million curies of tritium to have any sort of dangerous quantity. And you still cannot do an RDD because tritium is heavy hydrogen that rises rapidly. It would be like a hydrogen balloon. I hope al-Qaeda is working on tritium RDDs, because it will be a great day, you will see a lot of balloons go up in the air, I guess.

There is a rationality to what we do, where the thresholds are for these various radionuclides and where we feel it is safe for use in the home or use in the Capitol or wherever, and where additional controls are necessary, that is where we specifically license.

Senator AKAKA. Mr. Commissioner, I would like to ask a question that is not about how well NRC regulates who can buy a radioactive source, but about material that is even more accessible to terrorists, and that is lost or abandoned radioactive sources. And you mentioned there was a problem about these lost sources.

In an August 2003 report, the GAO said that the NRC did not have a good record of how many sources were being used around the country because at that time no State or Federal agency tracked individual sealed sources. Instead, NRC and the Agreement States tracked numbers of specific licensees.

Mr. MCGAFFIGAN. Right.

Senator AKAKA. However, in November 2006, NRC issued its final rule regarding establishment of a National Source Tracking System, a web-based system to enhance accountability for radioactive sources and provide a means for licensees to report the transfers of nationally tracked sources.

What about sources that were being used prior to the establishment of the NSTS? How does the NSTS help the NRC Agreement States that the lost or abandoned radioactive sources may be sitting in, in an abandoned building or hospital, on the back of a stolen truck, or laying in an open field for anyone to pick up? So how does this work?

Mr. MCGAFFIGAN. Sir, we have had since 2003 an interim database of Category 1 and 2 sources that has gotten better and better each year. We used it during the hurricanes in 2005 in Louisiana, and it was very helpful to us and highly accurate in terms of where Category 1 and 2 sources were. So the high-risk sources, we think we know where they are, even if they are sitting in a university and not being used at the moment.

As somebody mentioned earlier, the Department of Energy is now very aggressively trying to gather sources of any category that people no longer want. What NRC did before September 11, 2001—thanks to Greta Dicus, one of our previous Commissioners—we have jacked the fines up so that it is more expensive to pay our fines than to properly dispose of the source. Abandoning a small source can be a very expensive proposition. The classic case was in a steel mill, which would get contaminated because a small source would come in with a lot of other scrap.

So we first tightened that, but then—and we were trying to make the responsibility be the licensees, the people who had these small sources, make them pay for the proper disposition. There are a lot of companies who will take them back. But we have pretty much abandoned that now, and DOE will pay for getting anybody's sources back from them, and that is a post-September 11 change. And DOE does a very good job of it, in my view, their orphan source recovery program. We had some old sources left in even high schools that were sitting in closets, and this high school just could not justify sending it to J.L. Shepherd in California for whatever price J.L. Shepherd would charge them from taking the source off their hands. So they beat us, they outwaited us, and they now get DOE to do it for free. That is probably the right thing in a post-September 11 world. We may have been trying to put responsibility where responsibility has been shirked before September 11. After September 11, we put the responsibility on government. If you have a source you want to have recovered, DOE prioritizes it. We help them find them. The Agreement States help them find them. And I think the quantity of orphan sources in this country has gone down a very large amount because of DOE. It is only because we do not know about it that an orphan source would be sitting out there nowadays.

Senator AKAKA. Commissioner McGaffigan, I want to thank you so much for all of your responses and your patience here. I also want to thank Senator Coleman for his patience here. Do you have any further questions?

Senator COLEMAN. I have nothing further, Mr. Chairman.

Senator AKAKA. Well, I have other questions that I will submit for the record. I just want to note that the record will stay open for 15 days for questions for the record, and this Permanent Subcommittee on Investigations of the full Committee on Homeland Security and Governmental Affairs is now considered adjourned.

[Whereupon, at 11:18 a.m., the Subcommittee was adjourned.]

APPENDIX

United States Government Accountability Office

GAO

Testimony

Before the Permanent Subcommittee on Investigations, Committee on Homeland Security and Governmental Affairs, U.S. Senate

For Release on Delivery
Expected at 9:00 a.m. EDT
Thursday, July 12, 2007

NUCLEAR SECURITY

Actions Taken by NRC to Strengthen Its Licensing Process for Sealed Radioactive Sources Are Not Effective

Statement of Gregory D. Kutz, Managing Director
Forensic Audits and Special Investigations

Gene Aloise, Director
Natural Resources and Environment

John W. Cooney, Assistant Director
Forensic Audits and Special Investigations

GAO-07-1038T

July 12, 2007

GAO
Accountability·Integrity·Reliability

Highlights

Highlights of GAO-07-1038T, a testimony before the Permanent Subcommittee on Investigations, Committee on Homeland Security and Governmental Affairs, U.S. Senate

NUCLEAR SECURITY

Actions Taken by NRC to Strengthen Its Licensing Process for Sealed Radioactive Sources Are Not Effective

Why GAO Did This Study

The Nuclear Regulatory Commission (NRC) regulates domestic medical, industrial, and research uses of sealed radioactive sources. Organizations or individuals attempting to purchase a sealed source must apply for a license and gain the approval of either NRC or an "agreement state." To become an agreement state, a state must demonstrate to NRC that its regulatory program is compatible with NRC regulations and is effective in protecting public health and safety. NRC then transfers portions of its authority to the agreement state.

In 2003, GAO reported that weaknesses in NRC's licensing program could allow terrorists to obtain radioactive materials. NRC took some steps to respond to the GAO report, including issuing guidance to license examiners. To determine whether NRC actions to address GAO recommendations were sufficient, the Subcommittee asked GAO to test the licensing program using covert investigative methods.

What GAO Recommends

GAO recommends that NRC develop improved screening criteria to evaluate new license applications, conduct periodic reviews of license examiners to ensure the criteria are properly applied, and explore options to prevent license counterfeiting.

www.gao.gov/cgi-bin/getrpt?GAO-07-1038T.

To view the full product, including the scope and methodology, click on the link above. For more information, contact Gregory D. Kutz at (202) 512-7455 or kutzg@gao.gov or Gene Aloise at (202) 512-3841 or aloisee@gao.gov.

What GAO Found

By using the name of a bogus business that existed only on paper, GAO investigators were able to obtain a genuine radioactive materials license from NRC. Aside from traveling to a non-agreement state to pick up and send mail, GAO investigators did not need to leave their office in Washington, D.C., to obtain the license from NRC. Further, other than obtaining radiation safety officer training, investigators gathered all the information they needed for the license from the NRC Web site.

Excerpt from NRC License Acceptance Letter for Bogus Business

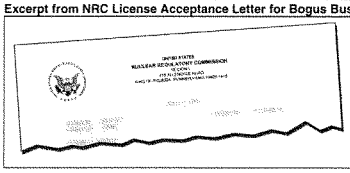

"This refers to your application dated February 2, 2007, for an NRC license. Enclosed with this letter is the license. Please review the enclosed document carefully and be sure that you understand all conditions..."

Source: GAO.

After obtaining a license from NRC, GAO investigators altered the license so it appeared that the bogus company could purchase an unrestricted quantity of radioactive sealed sources rather than the maximum listed on the approved license. GAO then sought to purchase, from two U.S. suppliers, machines containing sealed radioactive material. Letters of intent to purchase, which included the altered NRC license as an attachment, were accepted by the two suppliers. These suppliers gave GAO price quotes and commitments to ship the machines containing radioactive materials. The amount of radioactive material we could have acquired from these two suppliers was sufficient to reach the International Atomic Energy Agency's (IAEA) definition of category 3. According to IAEA, category 3 sources are dangerous if not safely managed or securely protected. Importantly, with patience and the proper financial resources, we could have accumulated substantially more radioactive source material.

GAO also attempted to obtain a license from an agreement state, but withdrew the application after state license examiners indicated they would visit the bogus company office before granting the license. An official with the licensing program told GAO that conducting a site visit is a standard required procedure before radioactive materials license applications are approved in that state.

As a result of this investigation, NRC suspended its licensing program until it could determine what corrective actions were necessary to resolve the weaknesses GAO identified. On June 12, 2007, NRC issued supplemental interim guidance with additional screening criteria. These criteria are intended to help a license examiner determine whether a site visit or face-to-face meeting with new license applicants is required.

Mr. Chairman and Members of the Subcommittee:

Thank you for the opportunity to discuss our covert testing of the Nuclear Regulatory Commission's (NRC) licensing process for sealed radioactive sources. Under the Atomic Energy Act of 1954, NRC regulates domestic medical, industrial, and research uses of sealed radioactive sources through a combination of regulatory requirements, licensing, inspection, and enforcement. Organizations or individuals attempting to purchase a sealed source must apply for a license and gain the approval of either NRC or an "agreement state." To become an agreement state, a state must first demonstrate to NRC that its regulatory program is compatible with NRC regulations and is effective in protecting public health and safety. Through an agreement between NRC and the state governor, NRC then transfers portions of its regulatory and licensing authority to the state. According to NRC, there are approximately 22,000 licenses in the United States—NRC administers about 4,400 licenses, and the rest are administered by regulatory authorities in the 34 agreement states.

Given that terrorists have expressed an interest in obtaining nuclear material, the Congress and the American people expect licensing programs for these materials to be secure. However, in 2003, we reported that weaknesses in the licensing program could allow terrorists to obtain radioactive materials. We recommended that NRC close this vulnerability by modifying its licensing process.[1] Among other things, we recommended that "NRC modify its process for issuing specific licenses to ensure that sealed radioactive sources cannot be purchased before NRC's verification—through inspection or other means—that the materials will be used as intended." NRC agreed with this recommendation and referred the issue to a working group composed of NRC and state representatives to coordinate NRC's response. In December 2005, the working group delivered its recommendations to NRC senior management. In December 2006, NRC issued new guidance to agreement states and NRC regional offices meant to strengthen the radioactive materials licensing process.[2] Although these are important steps forward, the Subcommittee remained concerned about whether, almost 6 years after September 11, 2001,

[1]GAO, *Nuclear Security: Federal and State Action Needed to Improve Security of Sealed Radioactive Sources*, GAO-03-804 (Washington, D.C.: Aug. 6, 2003).

[2]The guidance was also sent to officials in New Jersey, Pennsylvania, and Virginia—states that are not yet agreement states but have filed statements of intent with NRC to achieve agreement state status.

terrorists could still exploit weaknesses in the government's licensing process and obtain radioactive material. To determine whether NRC actions to address our 2003 recommendations were sufficient, the Subcommittee asked us to use covert investigative methods to test the licensing program.

To perform this investigation, we incorporated two bogus businesses—one in a non-agreement state and one in an agreement state. We selected these two states based on their proximity to the Washington, D.C., metro area. Using the names of the bogus businesses, we then prepared and submitted one application for a byproduct materials license to NRC and a second application to the department of the environment of the agreement state. In creating these applications, we only used publicly available information. Our investigators did not actually purchase radioactive materials for several reasons—first, the primary intent of our work was to test the licensing process rather than the purchasing process; second, we did not think the cost borne by the government would be necessary to prove the point of our work; and third, we did not have the proper facilities to safely store the radioactive materials. In performing research for this work, we reviewed our previous reports on nuclear security and learned about the licensing process from NRC's Web site. We altered the license we received from NRC, which enabled us to obtain agreements to purchase more radioactive material than the original license permitted. We conducted our investigative work from October 2006 through June 2007 in accordance with standards prescribed by the President's Council on Integrity and Efficiency.

In summary, we found the following:

- The license application we submitted to NRC was approved. We received a license in the mail from NRC about 4 weeks after submitting the application. Aside from traveling to a non-agreement state to pick up and send mail, our investigators did not need to leave their office in Washington, D.C., to obtain the license from NRC. Further, other than obtaining radiation safety officer training, investigators gathered all the information they needed for the license from the NRC Web site.

- After obtaining a license from NRC, we sought to purchase, from two U.S. suppliers, machines containing sealed radioactive material. Our letters of intent to purchase, which included an altered version of the NRC license as an attachment, were accepted by the suppliers. These suppliers gave us price quotes and commitments to ship the machines containing radioactive materials. The amount of radioactive material

we could have acquired from these two suppliers was sufficient to reach the International Atomic Energy Agency's (IAEA) definition of category 3. According to IAEA, category 3 sources are dangerous if not safely managed or securely protected and "could cause permanent injury to a person who handled them, or was otherwise in contact with them, for some hours. It could possibly—although it is unlikely—be fatal to be close to this amount of unshielded radioactive material for a period of days to weeks."[3] Importantly, with patience and the proper financial resources, we could have accumulated from other suppliers substantially more radioactive source material than what the two suppliers initially agreed to ship to us.

- We withdrew our second application from the agreement state department of the environment after license examiners indicated they would visit our company office before granting the license. Since we did not have a company office or the proper storage equipment, we asked the state to withdraw our application to obtain a license in this state. According to an official with the licensing program for this state, the completion of a site visit is a standard procedure before the state department of the environment approves a radioactive materials license application.

Background

Since the September 11, 2001, terrorist attacks there has been concern that certain radioactive material could be used in the construction of a radiological dispersion device (RDD). An RDD disperses radioactive material over a particular target area, which could be accomplished using explosives or by other means.[4] The major purpose of an RDD would be to create terror and disruption, not death or destruction. Depending on the type, form, amount, and concentration of radioactive material used, direct radiation exposure from an RDD could cause health effects to individuals in proximity to the material for an extended time; for those exposed for shorter periods and at lower levels, it could potentially increase the long-

[3]International Atomic Energy Agency, *Code of Conduct on the Safety and Security of Radioactive Sources* (Vienna, Austria: 2004).

[4]According to NRC, a dirty bomb is one type of RDD that combines a conventional explosive, such as dynamite, with radioactive material. The terms dirty bomb and RDD are often used interchangeably in the media. Most RDDs would not release enough radiation to kill people or cause severe illness—the conventional explosive itself could be more harmful to individuals than the radioactive material. However, depending on the scenario, an RDD explosion could create fear and panic, contaminate property, and require potentially costly cleanup.

term risks of cancer. In addition, the evacuation and cleanup of contaminated areas after dispersal could lead to panic and serious economic costs on the affected population. In 2003, a joint NRC/Department of Energy (DOE) interagency working group identified several radioactive materials (including Americium-241 and Cesium-137) as materials at higher risk of being used in an RDD, describing these as "materials of greatest concern."[5]

In its risk-based approach to securing radioactive sources, NRC has made a commitment to work toward implementing the provisions of IAEA's Code of Conduct. This document provides a framework that categorizes the relative risk associated with radioactive sources.[6] While NRC has recently focused on upgrading its capacity to track, monitor, and secure category 1 and 2 sources, which are considered high risk, category 3 sources are not a primary focus of NRC regulatory efforts. Category 3 sources include byproduct material, which is radioactive material generated by a nuclear reactor, and can be found in equipment that has medical, academic, and industrial applications. For example, a standard type of moisture gauge used by many construction companies contains small amounts of Americium-241 and Cesium-137. According to NRC, it would take 16 curies of Americium-241 to constitute a high-risk category 2 quantity, and 1.6 curies of Americium-241 is considered a category 3 quantity.

Results of Investigation

In October and November 2006, using fictitious names, our investigators created two bogus companies—one in an agreement state and one in a non-agreement state. After the bogus businesses were incorporated, our investigators prepared and submitted applications for a byproduct materials license to both NRC and the department of the environment for the selected agreement state. The applications, mailed in February 2007,

[5]The DOE/NRC Interagency Working Group on Radiological Dispersal Devices, *Radiological Dispersal Devices: An Initial Study to Identify Radioactive Materials of Greatest Concern and Approaches to Their Tracking, Tagging, and Disposition* (Washington, D.C.: 2003).

[6]NRC has endorsed the IAEA *Code of Conduct* and is working toward the implementation of its various provisions. On November 8, 2006, NRC issued a rule to require licensees to report information on the manufacture, transfer, receipt, disassembly, and disposal of all category 1 and 2 sources throughout their entire life cycle in the National Source Tracking System (NSTS). NRC's latest estimate is that the NSTS will be operational in May 2008. NRC told us that it has plans to consider including category 3 sources in the NSTS after the system becomes operational.

were identical except for minor differences resulting from variations in the application forms. Using fictitious identities, one investigator represented himself as the company president in the applications, and another investigator represented himself as the radiation safety officer. The license applications stated that our company intended to purchase machines with sealed radioactive sources.

According to NRC guidance finalized in November 2006 and sent to agreement states in December 2006, both NRC and agreement state license examiners should consider 12 screening criteria to verify that radioactive materials will be used as intended by a new applicant.[7] For example, one criterion suggests that the license examiner perform an Internet search using common search engines to confirm that an applicant company appears to be a legitimate business that would require a specific license. Another screening technique calls for the license examiner to contact a state agency to confirm that the applicant has been registered as a legitimate business entity in that state. If the examiner believes there is no reason to be suspicious, he or she is not required to take the steps suggested in the screening criteria and may indicate "no" or "not applicable" for each criteria. If the license examiner takes additional steps to evaluate a criterion, he or she should indicate what publicly available information was considered. If there is concern for a potential security risk, the guidance instructs license examiners to note the basis for that concern.

Application to NRC

Nine days after mailing their application form to NRC, our investigators received a call from an NRC license examiner. The NRC license examiner stated that the application was deficient in some areas and explained the necessary corrections. For example, the license examiner asked our investigators to certify that the machines containing sealed radioactive source material, which are typically used at construction sites, would be returned to the company office before being transported to a new construction site. The license examiner explained that this was a standard security precaution. Even though we did not have a company office or a construction site, our investigators nevertheless certified their intent to bring the machines back to their office before sending them to a new location. They made this certification via a letter faxed to NRC. Four days

[7]Nuclear Regulatory Commission, *Checklist to Ensure that Radioactive Materials Will Be Used As Intended*, NUREG-1556, Vol. 20, C (Washington, D.C.: Nov. 2006).

after our final correction to the license application, NRC approved our application and mailed the license to the bogus business in the non-agreement state. It took a total of 4 weeks to obtain the license. See figure 1 for the first page of the transmittal letter we received from NRC with our license.

Figure 1: Excerpt from NRC License Acceptance Letter for Bogus Business

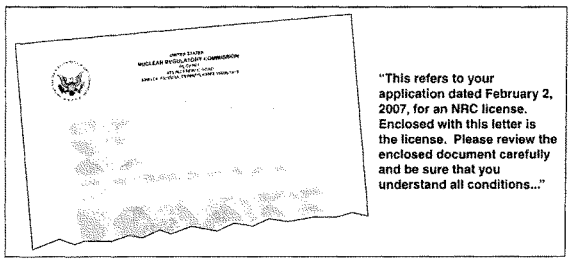

Source: GAO.

The NRC license is printed on standard 8-1/2 x 11 inch paper and contains a color NRC seal for a watermark. It does not appear to have any features that would prevent physical counterfeiting. We therefore concluded that we could alter the license without raising the suspicion of a supplier. We altered the license so that it appeared our bogus company could purchase an unrestricted quantity of sealed source materials rather than the small amounts of Americium-241 and Cesium-137 listed on the original license. We determined the proper language for the license by reviewing publicly available information.

Next, we contacted two U.S. suppliers of the machines specified in our license. We requested price quotes and faxed the altered license to the suppliers as proof that we were certified to purchase the machines. Both suppliers offered to sell us the machines and provided us price quotes. One of these suppliers offered to provide twice as many machines as we requested and offered a discount for volume purchases. In a later telephone call to one of the suppliers, a representative of the supplier told us that his company does not check with NRC to confirm the terms listed on the licenses that potential customers fax them. He said that his company checks to see whether a copy of the front page of the license is faxed with the intent to purchase and whether the requested order

exceeds the maximum allowable quantity a licensee is allowed to possess at any one time.

Although we had no legitimate use for the machines, our investigators received, within days of obtaining a license from NRC, price quotes and terms of payment that would have allowed us to purchase numerous machines containing sealed radioactive source materials. These purchases would have substantially exceeded the limit that NRC approved for our bogus company. If these radioactive materials were unsealed and aggregated together, the machines would yield an amount of Americium-241 that exceeds the threshold for category 3 materials.

As discussed previously, according to IAEA, category 3 sources are dangerous if not safely managed or securely protected and "could cause permanent injury to a person who handled them, or was otherwise in contact with them, for some hours. It could possibly—although it is unlikely—be fatal to be close to this amount of unshielded radioactive material for a period of days to weeks." Importantly, with patience and the proper financial resources, we could have accumulated, from other suppliers, substantially more radioactive source material than what the two suppliers initially agreed to ship to us—potentially enough to reach category 2. According to IAEA, category 2 sources, if not safely managed or securely protected, "could cause permanent injury to a person for a short time (minutes to hours), and it could possibly be fatal to be close to this amount of unshielded material for a period of hours to days."

Application to the Agreement State

Ten days after mailing their application form to the agreement state's department of environment, our investigators received a call from a department license examiner. The license examiner stated that the application was deficient in some areas and said that she would send us a letter outlining what additional information the state required before approving the license. The examiner further stated that before the license was granted, she would conduct a site visit to inspect the company office and storage facilities cited in our application. Our investigators subsequently decided not to pursue the license in this state and requested that their application be withdrawn. According to an official in the department of environment for this state, the license examiner followed the required state procedure in requesting a site visit. The official told us that as a matter of long-standing state policy, license examiners in this state conduct site visits and interview company management (especially radiation safety officers) before granting new licenses for radioactive materials. This state policy is more stringent than the guidance NRC

provided agreement states in December 2006. The NRC guidance identified a site visit as one possible screening criterion to use in evaluating a new license application, but, as discussed above, a site visit is not required under the NRC guidance.

Corrective Action Briefing

On June 1, 2007, we contacted NRC and discussed the results of our work. An NRC official indicated that NRC would take immediate action to address the weaknesses we identified. After this meeting, we learned that NRC suspended its licensing program for specific licenses until it could determine what corrective actions were necessary to resolve the weaknesses. NRC also held a teleconference with a majority of the 34 agreement states to discuss our work. On June 12, 2007, NRC issued supplemental interim guidance with additional screening criteria. These criteria are intended to help a license examiner determine whether a site visit or face-to-face meeting with new license applicants is required. NRC told us that it planned to convene a working group to develop improved guidance addressing the weaknesses we identified.

Conclusions and Recommendations for Executive Action

NRC's goal is to provide licenses to only those entities that can demonstrate that they have legitimate uses for radioactive materials. However, our work shows that there continues to be weaknesses in the process NRC uses to approve license applications. In our view, a routine visit by NRC staff to the site of our bogus business would have been enough to reveal our lack of facilities and equipment. Furthermore, if NRC license examiners had conducted even a minimal amount of screening—such as performing common Web searches or making telephone calls to local government or business offices—they would have developed serious doubts about our application. Once we received our license, the ease with which we were able to alter the license and obtain price quotes and commitments to ship from suppliers of radioactive materials is also cause for concern. Accordingly, we are making the following three recommendations to the Chairman of the NRC:

- First, to avoid inadvertently allowing a malevolent individual or group to obtain a license for radioactive materials, NRC should develop improved guidance for examining NRC license applications. In developing improved screening criteria, NRC should consider whether site visits to new licensees should be mandatory. These improved screening criteria will allow NRC to provide reasonable assurance that licenses for radioactive materials will only be issued to those with legitimate uses.

- Second, NRC should conduct periodic oversight of license application examiners so that NRC will be assured that any new guidance is being appropriately applied.
- Third, NRC should explore options to prevent individuals from counterfeiting NRC licenses, especially if this allows the purchase of more radioactive materials than they are approved for under the terms of the original license.

Mr. Chairman, this concludes our statement. We would be pleased to answer any questions that you or other Members of the Subcommittee may have at this time.

Contacts and Acknowledgments

For further information about this testimony, please contact Gregory D. Kutz at (202) 512-7455 or kutzg@gao.gov or Gene Aloise at (202) 512-3841 or aloisee@gao.gov. Contacts points for our Offices of Congressional Relations and Public Affairs may be found on the last page of this testimony.

STATEMENT SUBMITTED
BY THE
UNITED STATES NUCLEAR REGULATORY COMMISSION

TO THE
PERMANENT SUBCOMMITTEE ON INVESTIGATIONS
COMMITTEE ON HOMELAND SECURITY
AND GOVERNMENTAL AFFAIRS
UNITED STATES SENATE

CONCERNING
NRC LICENSING OF
SEALED RADIOACTIVE SOURCES

PRESENTED BY
EDWARD MCGAFFIGAN, JR.
COMMISSIONER

SUBMITTED: JULY 12, 2007

Chairman Levin, Senator Coleman, and other members of the subcommittee, I am here today on behalf of the Nuclear Regulatory Commission (NRC) to address the issues related to NRC's materials licensing program raised in your July 2, 2007 letter to NRC Chairman Klein.

BACKGROUND

I am first going to give you some background on the 2003 International Atomic Energy Agency (IAEA) revised Code of Conduct on the Safety and Security of Radioactive Sources, and on NRC's program to tighten controls on the highest risk sources, consistent with the United States Government's commitment to the Code of Conduct.

The Code of Conduct identifies 16 radionuclides of concern (which are listed on page 2 of the slides that accompany my testimony). Of these only four are widely used in civilian applications in this country: cobalt-60, cesium-137, iridium-192, and americium-241. Such civilian applications include food and medical equipment sterilization, medical research, cancer treatment, oil and gas exploration and non-destructive testing of materials.

Pages 3 and 4 of my slides show the Code of Conduct categories for americium-241 and cesium-137, the radionuclides in the devices relevant to GAO's investigation. Sources containing category 1 quantities of these materials are the most dangerous. Sources containing category 5 quantities are the least dangerous, but are still regulated for safety purposes by NRC above certain exempt levels. A minute quantity of americium-241, about one-millionth of a curie, is used in smoke detectors.

Since the revised Code of Conduct was issued in 2003, NRC's focus has been on putting in place much tighter controls on sources containing category 1 and 2 quantities of the 16 radionuclides of concern. Page 5 outlines our import-export control initiatives. The United States was the first nation to issue and implement import and export controls consistent with the Code of Conduct recommendations.

Pages 6 through 10, which I am not going to go through in detail, outline the security measures NRC has taken to date to tighten security on category 1 and category 2 sources. Pages 11 and 12 list future actions planned by the Commission. Again, NRC has almost always been the world leader in putting these much tighter controls in place. In all of these initiatives, however, unlike import-export control which is solely under NRC's authority, NRC coordinates with 34 Agreement States who, pursuant to agreements with NRC under section 274 of the Atomic Energy Act, control radioactive materials' use in their States. In Agreement States, NRC retains responsibility for federal licensees, such as military and veterans hospitals and Federal non-Department of Energy laboratories. DOE self-regulates its own laboratories.

Page 13 gives you the list of NRC-regulated States and Agreement States, and the total number of specific materials licenses in each state. Michigan is an NRC-regulated State. Minnesota is the newest Agreement State.

Pages 14 and 15 show the total number of category 1 and category 2 sources in Michigan and Minnesota according to NRC's 2006 interim data base. Nationwide there are approximately 1,500 licensees who possess category 1 and category 2 material as of 2006, less than ten percent of the 22,132 total materials licenses in the U.S. The ratios in Michigan and Minnesota are both below ten percent.

With that background, and in light of the GAO's findings, let me now address the four issues raised in Chairman Levin's and Ranking Minority Member Coleman's July 2 letter to Chairman Klein.

NRC POLICIES AND PROCEDURES ON ISSUANCE OF MATERIALS LICENSES

First, let me outline NRC's policies and procedures on issuance of materials licenses. NRC has very prescriptive rules on such licensing in Parts 30 to 39 of Title 10 of the Code of Federal Regulations. The 34 Agreement States each have adopted compatible, but not always identical, regulations. After September 11, 2001, the pre-Code of Conduct regulations were augmented to tighten controls on category 1 and category 2 sources first by voluntary compliance with security advisories and, later, by mandatory compliance with Orders or other binding license conditions. I summarized these additional controls on pages 6 to 10 of my slides. The Commission believes that we and the Agreement States have taken a risk-informed approach to these controls, that is we have worked on the highest risk categories of licensees first before turning to lower risk categories. In doing so, we believe we have allocated resources to maximize security benefits.

Every new applicant seeking to possess category 1 or 2 material is very thoroughly vetted both by NRC and the Agreement States, including pre-licensing site visits, issuance of Orders or binding license conditions required to implement the enhanced security measures prior to receiving the material, and post-licensing inspections within 12 months of license issuance.

However, new applicants for category 3 and below material do not face the same degree of scrutiny, as GAO identified. NRC and Agreement State licensing officers were allowed to exercise judgment on pre-licensing site visits based on five factors specified in the November 2006 guidance referred to on page 10. Post-licensing inspections would in all cases occur within 12 months of license issuance.

VULNERABILITY OF NRC AND AGREEMENT STATE MATERIALS LICENSES TO MODIFICATION OR COUNTERFEITING

GAO's most recent report has raised issues about the adequacy of these procedures because of their ability to obtain and modify an NRC license issued to a fake West Virginia firm. The NRC license as issued in March 2007 would have limited the firm to purchasing four or five moisture density gauges with the total radionuclide content approximately in the middle of category 4 for americium-241 and near the bottom of category 4 for cesium-137. These devices are used, for example, to look for voids in asphalt pavements. Each gauge costs about $5,000. An example is shown on page 16 of my slides.

However, GAO was able to alter the license to get bids for more than ten times the original license's limits on possession of americium-241. This would have given the GAO firm a total amount of americium-241 near the low end of category 3. A similar attempt by GAO to carry out the same sting in Maryland, an Agreement State, was thwarted by the Maryland licensing officer's decision to conduct a pre-application site visit, at which point GAO withdrew the application.

NRC appreciates GAO bringing their findings to our attention on June 1, 2007. Clearly, GAO's findings have brought into question the effectiveness of our November 2006 guidance and are a cause for concern. GAO's findings also reinforce findings from an NRC Inspector General audit (OIG-07-A-12) of the agency's materials regulatory process, completed in March 2007.

REMEDIAL MEASURES NRC HAS IMPLEMENTED OR PLANS TO IMPLEMENT IN RESPONSE TO THE EXPOSED WEAKNESSES IN THE NRC MATERIALS LICENSE APPLICATION PROCESS

NRC acted promptly to address the vulnerabilities in NRC's licensing process identified by GAO, initiating both short-term and long-term actions. Short-term actions were as follows:

- We immediately informed our Federal partners and the Agreement States of GAO's findings.
- Within 24 hours, we suspended issuance of all new materials licenses for about two weeks, pending issuance of revised interim procedures to address the GAO concerns.
- In mid-June, we issued revised interim procedures which require on-site inspections or in-office meetings with new materials license applicants. Exceptions may be made for applicants who already possess, or are listed on, an NRC or Agreement State license.

In addition, we initiated the following longer-term actions:

- Performing a retrospective examination of certain licenses issued by the NRC to verify that the licensees are legitimate.

- Re-evaluating our licensing procedures and guidance, and considering long-term solutions to the issues of falsification of identity and unauthorized alteration of license documents.
- Coordinating with the 34 Agreement States to ensure that security enhancements are implemented nation-wide.
- Re-evaluating our training and oversight procedures for NRC license reviewers and Agreement State programs to ensure that new security measures are effectively implemented.
- Evaluating how to probe for other thus far undiscovered vulnerabilities in NRC and Agreement State materials licensing programs.

NRC RESPONSIVENESS TO PRIOR GAO RECOMMENDATIONS REGARDING MATERIALS LICENSING PROCEDURES

Since GAO's 2007 investigation was meant to verify whether NRC and Agreement State actions in response to recommendation 3 of a 2003 GAO report (GAO-03-804) on security of radioactive sources were effective, the obvious question arises as to whether NRC did enough before closing its response to that recommendation in April 2006. Recommendation 3 was that NRC's licensing process should be modified to ensure that sealed sources cannot be purchased before NRC's verification, through inspection or other means, that the material will be used as intended.

NRC's response, coordinated with the Agreement States, made the distinction between category 1 and category 2 applicants and category 3 and category 4 applicants, which I discussed earlier, based on our judgment of risks and optimal allocation of resources. NRC believed that these revised procedures adequately addressed GAO's 2003 recommendation.

In hindsight NRC missed the vulnerabilities in our licensing process identified by GAO, that resulted in a seemingly legitimate licensee obtaining a license for a small amount of material, then falsifying the license and potentially aggregating a much greater amount of material. Our primary focus on the control of category 1 and category 2 material under our risk-informed approach perhaps resulted in our not sufficiently probing vulnerabilities in our materials licensing system.

NRC is committed to continuous improvements in our regulatory programs. We will implement the long-term actions in response to GAO's latest findings which I outlined earlier, and we will keep GAO and the Congress informed about our actions.

CONCLUSION

The Commission takes this issue very seriously. We will continue to move forward to address it, and we will implement new procedures as required to improve the security of radiological sources. GAO may have found a unique vulnerability, or there may be more left for us to discover. We intend to find out. Thank you, and I look forward to answering your questions.

U.S.NRC
UNITED STATES NUCLEAR REGULATORY COMMISSION
Protecting People and the Environment

NRC Licensing of Sealed Radioactive Sources

Commissioner Edward McGaffigan, Jr.

July 12, 2007

IAEA Category 2 Thresholds

Radionuclide	Quantity of Concern
Californium-242	5.4 curies
Cobalt-60	8.1 curies
Radium-226	11 curies
Curium-244	14 curies
Americium-241,Americium-241/Be, Plutonium-238, Plutonium-239/Be	16 curies
Iridium-192	22 curies
Cesium-137	27 curies
Selenium-75	54 curies
Ytterbium-169	81 curies
Gadolinium-153, Strontium-90	270 curies
Thulium-170	5,400 curies
Promethium-147	11,000 curies

IAEA Code of Conduct

Americium-241	
Category 1	1,600 curies and above
Category 2	16- 1,600 curies
Category 3	1.6 – 16 curies
Category 4	0.016 – 1.6 curies
Category 5	< 0.016 curies

IAEA Code of Conduct

Cesium-137	
Category 1	2,700 curies and above
Category 2	27- 2,700 curies
Category 3	2.7 – 27 curies
Category 4	0.027 – 2.7 curies
Category 5	< 0.027 curies

IAEA Code of Conduct

Implementation of IAEA Code of Conduct Import/Export Controls on Category 1 and Category 2 Sources

- Proposed rule – September 2004
- Final rule - July 2005
- Guidance issued – December 2005
- Effective date – December 2005

Post 9/11 Security Initiatives

- September 2001: Immediate Issuance of Security Advisories to NRC Licensees
- November 2001: Security Advisory on the Tracking of Highway Route Controlled Quantities.
- June 2002: Established NRC/DOE Working Group on Radiological Dispersion Devices (RDDs).
- May 2003: NRC/DOE Radiological Dispersion Device Report

Post 9/11 Security Initiatives

- June 2003: NRC Orders for Irradiators
- October 2003: Initial Interim Database for Category 1 and 2 Sources
- January 2004: NRC Orders for Manufacturers and Distributors - 61 licensees
- July 2005: Proposed Rule on National Source Tracking System (NSTS)

Post 9/11 Security Initiatives

- August 2005: NRC Orders for Transportation of Radioactive Materials in Quantities of Concern
- November/December 2005: NRC Orders and Agreement State Controls for Irradiators and Medical licensees, Radiographers, Broad Scope and Master Material licensees, Calibration facilities, etc.
- May 2006: Initial implementation of Pre-licensing guidance

Post 9/11 Security Initiatives

- August 2006: Radiation Source Protection and Security Task Force Report to Congress and the President (Response to 2005 Energy Policy Act)
- October 2006: Issuance of Orders requiring Fingerprinting and Criminal History Records Check for Unescorted Access to Irradiators, Manufacturers and Distributors, and those that Possess and Transfer Radioactive Material in Quantities of Concern

Post 9/11 Security Initiatives

- November 2006: Full Implementation of Pre-licensing guidance
- November 2006: Final NSTS Rule (Effective November 2007), but due to development issues, effective date now estimated late 2008
- January 2007: Commenced collection of data on sources that are ten times the Code of Conduct Category 4 threshold

Post 9/11 Planned Security Activities

- Fall 2007: Issuance of Orders requiring Fingerprinting and Criminal History Records Check for additional licensees
- Fall 2008: Commission Decision on expansion of NSTS to Category 3 sources
- Late 2008: NSTS full implementation

Post 9/11 Planned Security Activities

- December 2008: Proposed Rule (codifying orders) for enhanced security of material facilities
- October 2009: Web-based licensing implementation
- December 2009: Final Rule on enhanced security at materials facilities

U.S. Materials Licenses by State

State	Number of Licensees NRC	Agreement States	
Alabama	18	437	yes
Alaska	56	0	
Arizona	11	330	yes
Arkansas	7	248	yes
California	47	2,029	yes
Colorado	20	353	yes
Connecticut	193	0	
Delaware	60	0	
District of Columbia	41	0	
Florida	15	1,606	yes
Georgia	16	526	yes
Hawaii	59	0	
Idaho	82	0	
Illinois	37	742	yes
Indiana	278	0	
Iowa	2	177	yes
Kansas	12	301	yes
Kentucky	10	435	yes
Louisiana	10	551	yes
Maine	2	129	yes
Maryland	61	610	yes
Massachusetts	27	513	yes
Michigan	536	0	
Minnesota	13*	200	yes
Mississippi	5	320	yes
Missouri	297	0	
Montana	77	0	
Nebraska	3	149	yes
Nevada	3	275	yes
New Hampshire	4	79	yes
New Jersey	510	0	
New Mexico	14	193	yes
New York	38	1,505	yes
North Carolina	18	673	yes
North Dakota	10	64	yes
Ohio	50	817	yes
Oklahoma	26	245	yes
Oregon	4	484	yes
Pennsylvania	697	0	
Rhode Island	1	59	yes
South Carolina	15	369	yes
South Dakota	41	0	
Tennessee	23	601	yes
Texas	43	1,630	yes
Utah	11	183	yes
Vermont	38	0	
Virginia	386	0	
Washington	19	429	yes
West Virginia	182	0	
Wisconsin	29	342	yes
Wyoming	78	0	
Others**	152	0	
TOTAL:	**4,528**	**17,604**	

*As of August 2006 (Minnesota State effective March 31, 2006). **"Others" includes U.S. territories such as Puerto Rico, Virgin Islands, and Guam.
Note: Agreement States data are latest available as of February 8, 2005. NRC data as of March 29, 2006.

Category 1 & 2 sources in Michigan

	IAEA Category	Sources	Devices	Licensees
Self-shielded irradiators	1 or 2	33	28	13
Panoramic irradiators	1	0	0	0
Gamma Knives & Teletherapy devices	1	404	4	2
Radiography	2	68	68	6
Well-logging	2 or 3	0	0	0

Total quantities of radioactive material

Americium-241	0 Curies
Cobalt-60	32,886 Curies
Cesium-137	40,811 Curies
Iridium-192	3,790 Curies

Category 1 & 2 sources in Minnesota

	IAEA Category	Sources	Devices	Licensees
Self-shielded irradiators	1 or 2	16	13	6
Panoramic irradiators	1	0	0	0
Gamma Knives & Teletherapy devices	1	403	3	3
Radiography	2	19	19	7
Well-logging	2 or 3	0	0	0

Total quantities of radioactive material

Americium-241	0 Curies
Cobalt-60	23,019 Curies
Cesium-137	27,796 Curies
Iridium-192	1,154 Curies

U.S.NRC

Typical Moisture Density Gauge

Backup Slides: Source Design

Typical Encapsulation

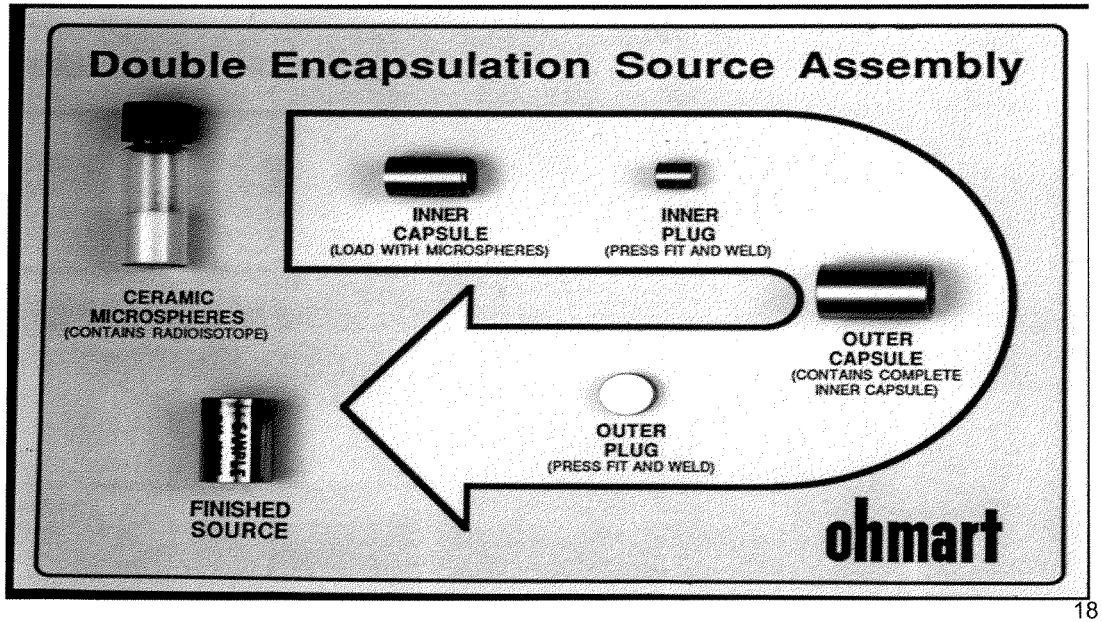

Source Cutaway Drawing: Cesium-137

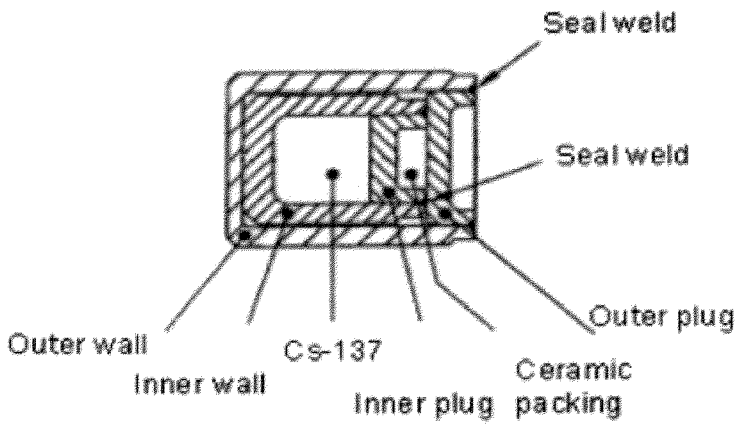

Source Cutaway Drawing: Americium-241

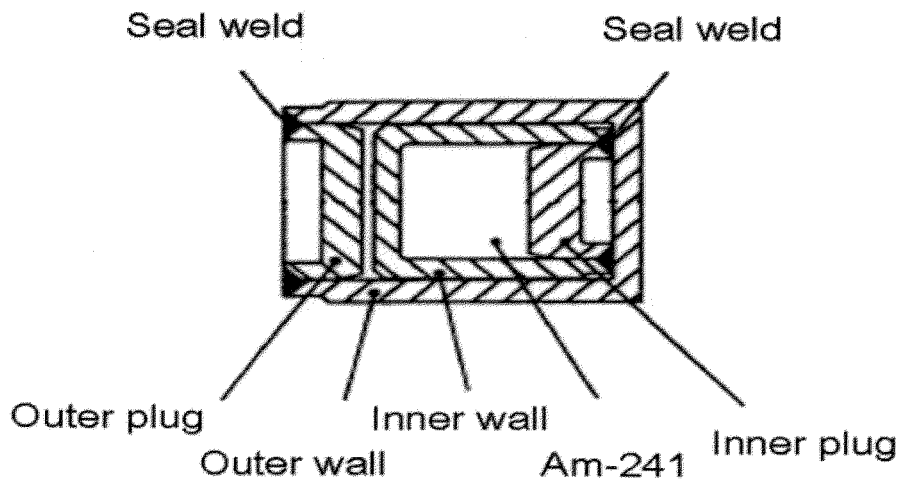

Am-241 source

United States Senate
PERMANENT SUBCOMMITTEE ON INVESTIGATIONS
Committee on Homeland Security and Governmental Affairs
Carl Levin, Chairman
Norm Coleman, Ranking Minority Member

DIRTY BOMB VULNERABILITIES

STAFF REPORT

PERMANENT SUBCOMMITTEE ON INVESTIGATIONS

UNITED STATES SENATE

RELEASED IN CONJUNCTION WITH THE PERMANENT SUBCOMMITTEE ON INVESTIGATIONS JULY 12, 2007 HEARING

Permanent Subcommittee on Investigations
EXHIBIT #1

SENATOR CARL LEVIN
Chairman
SENATOR NORM COLEMAN
Ranking Minority Member
PERMANENT SUBCOMMITTEE ON INVESTIGATIONS

ELISE J. BEAN
Staff Director and Chief Counsel

MADELYN R. CREEDON
Counsel to Senator Carl Levin
Armed Services Committee

MARK L. GREENBLATT
Staff Director and Chief Counsel to the Minority

TIMOTHY R. TERRY
Counsel to the Minority

DIRTY BOMB VULNERABILITIES

TABLE OF CONTENTS

I. **INTRODUCTION** 1

II. **EXECUTIVE SUMMARY** 1

III. **BACKGROUND** 3
- A. Radiological Materials 3
- B. The NRC And Agreement States 4
- C. The Category System And Its Limitations 5
- D. Materials Licenses 6
- E. The GAO Report In 2003 7
- F. NRC Inspector General Reports In 2006 And 2007 8
- G. Subcommittee Investigation And Hearing in 2006 8
- H. NRC Amends Its Licensing Procedures In December 2006 ... 9

IV. **THE 2007 INVESTIGATION** 10
- A. Obtaining A Real NRC License For A Fake Company 11
- B. Counterfeiting The NRC License 13
- C. Following The 2007 Investigation, NRC Revises Its Licensing Process 14

V. **RECOMMENDATIONS** 15
- A. The NRC Should Reevaluate The Apparent Good-Faith Presumption That Pervades Its Licensing Process 15
- B. The NRC Should Regulate Category 3 Sources More Stringently 16
  - 1. The NRC Should Physically Inspect Applicants' Facilities *Before* The Issuance Of A Category 3 Materials License .. 18
  - 2. The NRC Should Consider Including Category 3 Sources In The Proposed National Source Tracking System 19
- C. The NRC Should Act Quickly To Establish A Web-Based Licensing System To Ensure That Source Materials Can Be Obtained Only In Authorized Amounts By Legitimate Users .. 20

VI. **CONCLUSION** 21

# # #

I. INTRODUCTION

Since 2003, the U.S. Senate Permanent Subcommittee on Investigations (Subcommittee) has engaged in a bipartisan investigation into U.S. Government efforts to prevent a nuclear or radiological attack on U.S. interests. The Subcommittee's efforts have included oversight investigations into U.S. port security and global supply chain security.[1] In addition, the Subcommittee has, with the assistance of the U.S. Government Accountability Office (GAO), probed certain vulnerabilities in the U.S. Government's practices and procedures for issuing licenses to possess radioactive materials. This report is another component in that effort, examining certain vulnerabilities in U.S. regulation of radioactive materials and whether America's enemies could exploit those weaknesses to develop a so-called "dirty bomb."[2] Finally, this report presents certain recommendations to remedy those vulnerabilities.

II. EXECUTIVE SUMMARY

Dirty bombs pose an ongoing terrorist threat that the United States must be prepared to counter. The Executive Director of the 9/11 Commission stated in 2004 that al-Qaeda "remains interested in using a radiological dispersal device or 'dirty bomb.' ... Documents found in al-Qaeda facilities contain accurate information on the usage and impact of such weapons."[3] Similarly, in September 2006, then-leader of al-

---

[1] The Subcommittee's investigation into these security matters has featured a series of hearings including a May 2005 hearing entitled "*The Container Security Initiative and The Customs-Trade Partnership Against Terrorism: Securing the Global Supply Chain or Trojan Horse?*" In March 2006, the Subcommittee held a two-day hearing entitled *Neutralizing the Nuclear and Radiological Threat: Securing the Global Supply Chain.* In conjunction with that hearing, the Subcommittee released a bipartisan report, entitled *An Assessment of U.S. Efforts to Secure the Global Supply Chain*, which provided a detailed assessment of numerous port security and global supply chain security programs. *See* http://www.hsgac.senate.gov/index.cfm?Fuseaction=Hearings.Detail&HearingID=336 and http://www.hsgac.senate.gov/index.cfm?Fuseaction=Hearings.Detail&HearingID=335.

[2] The U.S. Nuclear Regulatory Commission defines a "dirty bomb" as follows: A "dirty bomb" is one type of a "radiological dispersal device" (RDD) that combines a conventional explosive, such as dynamite, with radioactive material. The terms dirty bomb and RDD are often used interchangeably in the media. Most RDDs would not release enough radiation to kill people or cause severe illness – the conventional explosive itself would be more harmful to individuals than the radioactive material. However, depending on the scenario, a RDD explosion could create fear and panic, contaminate property, and require potentially costly cleanup. *See* NRC *Fact Sheet on Dirty Bombs* at http://www.nrc.gov/reading-rm/doc-collections/fact-sheets/dirty-bombs.html. While the NRC states that a nuclear bomb would be a "Weapon of Mass Destruction," it indicates that a dirty bomb is a "Weapon of Mass Disruption," in which "contamination and anxiety are the terrorists' major objectives." *See id.*

[3] *See* Statement of Dr. Philip D. Zelikow, Executive Director of the National Commission on Terrorist Attacks Upon the United States, June 16, 2004; Staff Statement No. 15, *Overview of the Enemy*, National Commission on Terrorist Attacks Upon the United States, June 16, 2004; http://www.9-11commission.gov/hearings/hearing12.htm.

Qaeda in Iraq, Abu Hamza al-Muhajir was reported to have called for "nuclear scientists and explosive experts" to help his terrorist group manufacture "unconventional weapons, whether biological or dirty, as they call them."[4] Likewise, would-be terrorists arrested in London in August 2004 reportedly sought to construct "a crude radiological dirty bomb."[5]

In light of this threat, regulation and tracking of radioactive materials have become more important than ever.[6] This report explores some fundamental gaps in the Federal Government's regulation of radioactive materials, in particular, vulnerabilities in the procedures employed by the U.S. Nuclear Regulatory Commission (NRC) to administer licenses for such materials. These vulnerabilities were exposed when the GAO, at the request of this Subcommittee, conducted a clandestine operation to create a dummy corporation and obtain a valid NRC materials license to purchase certain nuclear materials. After a cursory review, the NRC issued the materials license to GAO's dummy corporation in just 28 days.

Additional weaknesses were identified when the GAO was able to counterfeit the NRC license – using publicly available, off-the-shelf computer software – to remove restrictions on the quantity of radioactive materials permitted under the license. GAO investigators then used the counterfeited licenses to execute contracts to buy enough radioactive materials to meet the NRC's definition of a "dangerous" quantity – enough to build a dirty bomb. Perhaps more importantly, investigators reported that they could have easily prolonged their effort, generating dozens of fake licenses, visiting multiple suppliers, and stockpiling significantly higher amounts of this (and potentially more radioactive) material. The GAO states that it could have purchased "substantially more radioactive source material," possibly enough to reach the threshold of a "very dangerous" quantity. In other words, the modest amount of radioactive materials that the GAO sought to purchase was

---

[4] *See* David Rising, Associated Press, "*Al Qaeda in Iraq Beckons Nuclear Scientists*," September 29, 2006 ("The fugitive terrorist chief said experts in the fields of 'chemistry, physics, electronics, media and all other sciences – especially nuclear scientists and explosives experts' should join his group's jihad, or holy war, against the West. 'We are in dire need of you,' said the speaker. 'The field of jihad can satisfy your scientific ambitions, and the large American bases [in Iraq] are good places to test your unconventional weapons, whether biological or dirty, as they call them.'").

[5] *See* Adam Zagorin and Elaine Shannon, Time Magazine, "*London's Dirty-Bomb Plot*," October 3, 2004, http://www.time.com/time/magazine/article/0,9171,1101041011708959,00.html.

[6] The term "radioactivity" denotes the spontaneous disintegration of an unstable atomic nucleus, resulting in the emission of helium nuclei (called alpha particles), electrons (called beta particles), and/or gamma rays (high-energy x-rays). *See* NRC Glossary at http://www.nrc.gov/reading-rm/basic-ref/glossary.

but a demonstration amount, and it could have been considerably larger and considerably more dangerous.

The weaknesses in NRC licensing procedures are not new. In fact, as described in this report, several entities – including the GAO, the NRC Inspector General, and this Subcommittee – have recommended over the past 4 years that the NRC improve its licensing procedures to ensure that radioactive materials will be used as intended. To its credit, the NRC has recently shown a willingness to strengthen its licensing process, including making changes in June 2007 as a response to the GAO's latest clandestine operation. Those recently-adopted changes are reviewed below, along with several recommendations designed to improve NRC regulation even further.

Based upon its investigation, the Subcommittee staff makes the following recommendations:

- The NRC should reevaluate the apparent good-faith presumption that pervades its licensing process.
- The NRC should regulate Category 3 sources more stringently. Specifically, the NRC should (i) physically inspect applicants' facilities *before* the issuance of a Category 3 materials license, and (ii) consider including Category 3 sources in the proposed National Source Tracking System.
- The NRC should act quickly to establish a web-based licensing system to ensure that source materials can be obtained only in authorized amounts by legitimate users.

These recommendations are designed to bolster the NRC's ability to prevent radioactive materials from being acquired to create a dirty bomb.

III. BACKGROUND

A. RADIOACTIVE MATERIALS

Radioactive materials play a vital role in American medicine, research, and industry. Such radioactive materials, which are generally called "sealed sources," are used for a wide array of purposes throughout the United States. In medicine, for example, sealed sources help to diagnose injuries, treat cancer, and sterilize medical devices. Similarly, sealed sources are used to irradiate food, to detect flaws in metal welds, to determine the

WHAT IS A "SEALED SOURCE"?

The term "sealed source" is important in the radiological community. The NRC defines a sealed source as "any radioactive material or byproduct encased in a sealed metal or plastic capsule to prevent leakage." Sealed sources may be as small as a coin or contained in machines as large as an SUV. Under normal conditions, sealed sources present an insignificant contamination hazard but can be dangerous if exposed.

density of a variety of materials, and to detect the presence of minerals miles below the Earth's surface.

B. THE NRC AND AGREEMENT STATES

The Atomic Energy Act of 1954 authorizes the NRC to regulate the possession and use of sealed sources through regulatory requirements, licensing, inspection, and enforcement.[7] Section 274 of the Act authorizes the NRC to relinquish this authority, for purposes of health and safety, to States that agree to regulate their residents' use of sealed sources. States that enter such contracts with the NRC are commonly called "Agreement States." To qualify, "the States must first demonstrate that their regulatory programs are compatible with NRC's program and adequate to protect public health and safety."[8] After entering into an agreement with the NRC, the respective States then become responsible for regulating the possession and use of radioactive materials within their borders. The NRC periodically evaluates the Agreement States' programs to ensure that they remain compatible with NRC regulations and are generally effective in protecting health and public safety.[9]

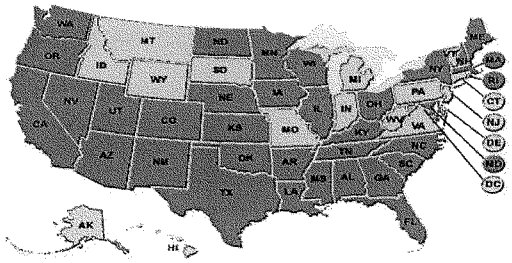

Map Reflecting 34 Agreement States (in dark shading) and 16 Non-Agreement States (in light shading)

There are currently 34 Agreement States, as reflected in the figure above.[10] For the 16 remaining non-agreement States, as well as the

---

[7] *See* 42 U.S.C. Section 2021 et seq.

[8] *See* NRC Office of the Inspector General, *Summary Report and Perspectives on Byproduct Material Security and Control*, OIG-07-A-12, March 30, 2007 (the "NRC Inspector General March 2007 Report").

[9] *See* GAO, *Nuclear Security: Federal and State Action Needed to Improve Security of Sealed Radioactive Sources*, GAO-03-804, August 6, 2003 (the "GAO August 2003 Report").

[10] According to the Organization of Agreement States, three additional States (New Jersey, Pennsylvania, and Virginia) have begun the process of becoming Agreement States. *See* http://www.agreementstates.org.

District of Columbia, the Commonwealth of Puerto Rico, and various territories of the United States, the NRC itself regulates the use of sealed sources.

C. THE CATEGORY SYSTEM AND ITS LIMITATIONS

The NRC classifies radioactive materials using a scale from 1 through 5 according to the source's immediate or near-immediate effects on human health. This categorization regime is based in large measure on the International Atomic Energy Agency (IAEA) Code of Conduct on the Safety and Security of Radioactive Sources.[11] The code of conduct contains basic principles necessary for the safe and secure use of radioactive materials.

Under this regime, Category 1 sources are considered the most dangerous and Category 5 sources are considered the least dangerous. Categories 1 and 2, the most dangerous materials, receive the most stringent security and safety requirements. Category 3, while still considered "dangerous" by the IAEA and the NRC, is subject to much more lenient measures. Categories 4 and 5, in turn, are subject to even fewer requirements. For example, a 10-microcurie quantity of cesium-137, an amount unlikely to harm anyone, falls under Category 5 and would be exempt from licensing requirements.[12] In contrast, 3,000 curies of the same material, which would be enough to seriously injure or kill anyone exposed to it for several minutes, would qualify as a Category 1 source and would be subjected to stringent health, security, and use regulation.

As noted above, the category system is focused almost exclusively on the source's *immediate* or *near-immediate* effects on human health. Due to this discrete focus, the category system has certain significant limitations. In particular, it explicitly excludes: (1) any probabilities of harm from delayed effects of radiation – termed "stochastic effects" – such as radiation-induced cancer developing later in life; [13] and (2)

---

[11] *See* GAO, *Nuclear Security: DOE Needs Better Information to Guide Its Expanded Recovery of Sealed Radiological Sources*, GAO-05-967, September 22, 2005 (the "GAO September 2005 Report"); IAEA, *Code of Conduct on the Safety and Security of Radioactive Sources*, September 8, 2003 (the "IAEA Code of Conduct"). *See also* IAEA, *Categorization of Radioactive Sources*, IAEA-TECDOC-1344, July 2003 (the "IAEA Categorization of Radioactive Sources").

[12] According to the NRC Glossary, a "curie" is "[t]he basic unit used to describe the intensity of radioactivity in a sample of material. The curie is equal to 37 billion (3.7×10^{10}) disintegrations per second, which is approximately the activity of 1 gram of radium. A curie is also a quantity of any radionuclide that decays at a rate of 37 billion disintegrations per second. It is named for Marie and Pierre Curie, who discovered radium in 1898." *See* http://www.nrc.gov/reading-rm/basic-ref/glossary/curie-ci.html.

[13] The NRC defines "stochastic effects" as "effects that occur by chance, generally occurring without a threshold level of dose, whose probability is proportional to the dose and whose severity is independent of the dose. In the context of radiation protection, the main stochastic effects are cancer and genetic effects." *See* NRC Glossary.

socioeconomic consequences resulting from the dispersion of radioactive material. In other words, in designating the category for a specific source amount, the category system considers only immediate harm to human health, while ignoring the social and economic impacts of a radiological attack and the long-term health effects on a population.

D. MATERIALS LICENSES

The NRC and Agreement States issue licenses to allow authorized entities to possess and use certain radioactive materials. There are two types of licenses for sealed sources – general and specific. Generally-licensed devices are considered inherently safe because they house radioactive materials that are either trivial in size or embedded inside large and immobile machines. Generally-licensed devices, such as fixed gauges, luminous exit signs, and smoke detectors, require no authorization to purchase and use.

Most sealed sources with industrial or medical uses, however, require a specific materials license. Specific licenses must be obtained from either the NRC or an Agreement State. Roughly 22,000 specific materials licenses have been issued; the Agreement States administer approximately 17,450 of those licenses, while the NRC administers approximately 4,500.[14] According to the NRC, each year the NRC issues about 200 new materials licenses, while the Agreement States issue about 800.

To qualify for a specific materials license, an applicant must demonstrate that use of the radioactive material will meet safety requirements set forth in NRC regulations or in applicable Agreement State regulations. NRC offers extensive, user-friendly guidance to assist potential applicants in completing required paperwork (Licensing Guidance). In fact, NRC provides suggested answers to the questions on its license applications. The figure below is an excerpt of the Licensing Guidance illustrating how the NRC provides "Suggested Responses" – including specific language – to application queries.

---

[14] *See* GAO, *Nuclear Security: Actions Taken by NRC to Strengthen Its Licensing Process for Sealed Radioactive Sources Are Not Effective*, GAO-07-1038T, July 12, 2007 (the "GAO July 2007 Report").

EXCERPT OF NRC GUIDANCE PROVIDING SPECIFIC LANGUAGE FOR APPLICATIONS

ITEMS 7 THROUGH 11: TRAINING AND EXPERIENCE, FACILITIES AND EQUIPMENT, RADIATION SAFETY PROGRAM, AND WASTE DISPOSAL

Item No. And Title	Suggested Response	Yes	Alternative Procedures Attached
7. INDIVIDUAL(S) RESPONSIBLE FOR RADIATION SAFETY PROGRAM AND THEIR TRAINING AND EXPERIENCE – RADIATION SAFETY OFFICER Name:_____	Before obtaining licensed materials, the proposed RSO will have successfully completed one of the training courses described in Criteria in the section entitled "Individual(s) Responsible for Radiation Safety Program and Their Training and Experience – Radiation Safety Officer" in NUREG-1556, Vol. 1, Rev. 1, dated November 2001.	☐	☐
8. TRAINING FOR INDIVIDUALS WORKING IN OR FREQUENTING RESTRICTED AREAS	Before using licensed materials, authorized users will have successfully completed one of the training course described in Criteria in the section entitled "Training for Individuals Working In or Frequenting Restricted Areas" in NUREG-1556, Vol. 1, Rev 1, dated November 2001.	☐	☐

If the application meets approval criteria, a license will be issued. Once a license is issued, NRC policy requires that all new licensees be inspected within one year, regardless of the category of the source or other materials being used.[15] One NRC official stated that Agreement States generally have the same requirement.

E. THE GAO REPORT IN 2003

In August 2003, the GAO released a report, entitled *Nuclear Security: Federal and State Action Needed to Improve Security of Sealed Radioactive Sources*, that examined numerous issues related to the security of sealed sources of radioactive materials. In particular, the GAO study focused on "(1) the number of sealed sources in the United States, (2) the number of sealed sources lost, stolen, or abandoned, (3) the effectiveness of Federal and State controls over sealed sources, and (4) the [NRC] and State efforts since September 11, 2001, to strengthen security of sealed sources."[16]

The report expressed alarm at an NRC licensing process that "leaves sealed sources vulnerable" by "failing to establish the authenticity of the prospective licensee and whether information

[15] *See* NRC, *Inspection Manual*, Chapter 2800, November 25, 2003.

[16] *See* GAO August 2003 Report.

provided in the application is indeed valid."[17] The report contrasted the NRC's procedures to those of several Agreement States that required the physical inspection of a licensee's facilities prior to the issuance of a license. Importantly, the 2003 GAO report recommended that the NRC modify its licensing procedures "to ensure that sealed sources cannot be purchased before NRC's verification – through inspection or other means – that the materials will be used as intended."[18]

F. NRC INSPECTOR GENERAL REPORTS IN 2006 AND 2007

In 2006, the Inspector General of the NRC (the "NRC-IG") examined the NRC's regulation of source materials, and concluded that NRC officials were not aware of all the potential security gaps in the materials license application and review process.[19] Reiterating this point in a 2007 report, the NRC-IG asserted that "this lack of awareness was attributed to NRC's failure to take a comprehensive look inwards at its own business and regulatory processes, which would include conducting vulnerability assessments of the license application and review process. As a result, individuals with malevolent intentions could exploit vulnerabilities in the license application and review process to obtain byproduct material for use in a dirty bomb."[20]

The March 2006 NRC-IG report recommended that the NRC (1) conduct a complete vulnerability assessment of its materials program, including the license application and review process and the methods used by licensees to purchase source materials from suppliers; and (2) modify the license application and review process to mitigate the risks identified in the vulnerability assessment.[21]

G. THE SUBCOMMITTEE INVESTIGATION AND HEARING IN 2006

In conjunction with its ongoing investigation into nuclear and radiological threats to the United States, the Subcommittee requested in 2005 that the GAO probe certain vulnerabilities in NRC licensing procedures.[22] Pursuant to the Subcommittee's request, GAO investigators conducted a clandestine operation in which they purchased, via telephone, a small quantity of radioactive source material from a

---

[17] *Id.*

[18] *Id.*

[19] *See* NRC Office of the Inspector General, *Audit of the NRC Byproduct Materials License Application and Review Process*, OIG-06-A-11, March 10, 2006 (the "NRC Inspector General March 2006 Report").

[20] *See* NRC Inspector General March 2007 Report.

[21] *See* NRC Inspector General March 2006 Report.

[22] *See* GAO Testimony, *Border Security: Investigators Transported Radioactive Sources Across Our Nation's Borders at Two Locations*, GAO-06-583T, March 28, 2006, hearing before the U. S. Senate Permanent Subcommittee on Investigations, S. Hrg. 109-548.

commercial source by posing as employees of a fictitious company. Then, using commercial, off-the-shelf computer software, they created NRC licenses modeled after official documents found on the Internet. Two GAO teams then used the fraudulent NRC licenses to smuggle the radioactive materials into the United States in two simultaneous border crossings. The Subcommittee held a hearing on the GAO investigation in March 2006.

Although the radioactive material was detected at the borders, Customs and Border Protection officers at these sites failed to recognize the phony licenses and had no mechanism to determine whether the proffered licenses were in fact valid. Therefore, even though the Customs officials at the borders largely followed proper procedures in stopping the GAO vehicles, they permitted the GAO teams to enter the country with their cargo.

In late March, 2006, the Subcommittee held a two-day hearing called *Neutralizing the Nuclear and Radiological Threat: Securing the Global Supply Chain.* At that hearing, Senator Norm Coleman, then-Chairman of the Subcommittee, inquired about the implementation of an NRC materials license database and explored possible measures to confirm applicant validity, urging the NRC to "reform the processes by which anyone can acquire radiological material."[23] The NRC subsequently established a system enabling U.S. border personnel to quickly verify the authenticity of NRC licenses presented at the border.[24]

H. NRC AMENDS ITS LICENSING PROCEDURES IN DECEMBER 2006

In response to recommendations from the GAO, the NRC-IG, and the Subcommittee, the NRC amended its materials licensing procedures in December 2006. Specifically, the NRC adopted a program to assist NRC reviewers in assessing materials license applications.[25] The revised process was entitled "Checklist to Ensure that Radioactive Materials Will Be Used as Intended" (Checklist).

The Checklist prompts NRC reviewers to make two threshold determinations – namely, whether the applicant is unknown to the reviewer and has not previously received a materials license; and whether the application seeks authorization for Category 1 or 2 sources – *i.e.*, the most dangerous radioactive materials. There is no scrutiny if the answer to both threshold questions is "No" – *i.e.*, the applicant is known and the requested license is for sources in Category 3 or below. In such

---

[23] *See* http://www.hsgac.senate.gov/index.cfm?Fuseaction=Hearings.Detail&HearingID=336 and http:// www.hsgac.senate.gov/index.cfm?Fuseaction=Hearings.Detail&HearingID=335.

[24] *See* NRC, *The NRC Source Data Team and U.S. Customs*, www.nrc.gov/security/byproduct/export-import/source-data-team.html.

[25] *See* NRC, *Checklist to Ensure that Radioactive Materials Will Be Used as Intended*, December 2006.

circumstances, the review process basically ends and a license will generally be issued. In fact, the Checklist plainly instructs reviewers that, if the answer to either threshold question is "No," "then do not complete Step 2. Sign and date the completed form []."[26]

If the answer to either question is "Yes" – *i.e.*, the applicant is unknown or the application requests materials in Categories 1 or 2 – reviewers are prompted to proceed to Step 2, which gives guidance to the reviewer regarding further scrutiny of the application. For instance, the guidance suggests requesting supplemental information concerning the ownership of the applicant and the authority and training of the applicant's Radiation Safety Officer. As noted above, the NRC provides Licensing Guidance to applicants on how to respond to NRC queries, including offering suggested responses to specific questions.[27]

In addition to the information requests, the Checklist provides guidance on whether a visit to the applicant's facilities is required. The guidance requires a physical inspection for applications for Category 1 and 2 sources before a license is issued. For applications for Category 3 or 4 sources, however, the physical inspection requirement is considerably more lenient. Pursuant to the Checklist, a license for Category 3 sources or below may be issued before an on-site visit. The on-site visit may take place up to 12 months *after* the license has been issued. In contrast to the NRC procedures for post-issuance visits, several Agreement States conduct an on-site visit before the issuance of a license to verify the legitimacy of potential licensees.[28] According to GAO, several Agreement States either inspect facilities before a license is issued or hand-deliver the licenses in order to observe the applicant's facilities.[29]

IV. THE 2007 INVESTIGATION

Building on its previous review of NRC licensing procedures, the Subcommittee asked GAO in October 2006 to test whether the NRC's revised licensing procedures were effective. The facts surrounding the GAO's efforts are recounted in detail in GAO's testimony before the Subcommittee, entitled *Actions Taken by NRC to Strengthen Its Licensing Process for Sealed Radioactive Sources Are Not Effective*.[30] Below is a brief review of the GAO's 2007 operation and its recommendations.

---

[26] *See id.*

[27] *See* NRC, *Consolidated Guidance About Materials Licenses: Program-Specific Guidance About Portable Gauge Licenses*, NUREG-1556, Vol. 1, November 2001.

[28] *See* GAO August 2003 Report.

[29] *See id.*

[30] *See* GAO July 2007 Report.

A. Obtaining A Real NRC License For A Fake Company

Pursuant to the Subcommittee's October 2006 request, GAO investigators incorporated two dummy corporations in Delaware in the fall of 2006. These two companies had no capitalization, no operations, no websites, no physical facilities, and no employees. Using aliases and the names of the bogus corporations, GAO investigators applied for two materials licenses – one from the NRC and one from an Agreement State. They requested a license to obtain specified low quantities of Category 4 materials. The differences between the two results could not be more stark.

GAO's application sought licenses for portable moisture density gauges. (An example of such a gauge can be found in the image below, which was obtained from the NRC website. *See* NRC, *Fact Sheet on Dirty Bombs*.) These gauges contain alpha and gamma-emitting sealed sources such as cesium-137 and americium-241 and are used to evaluate the properties of soil, water, and pavement. Like many sealed sources, they are designed to be carried in the field and can be found at hundreds of construction sites around the country.

Example of Moisture Density Gauge

Shortly after the GAO submitted its application to the materials licensing agency in the Agreement State, the agency sent a letter to the GAO's dummy "company," indicating that GAO's application was incomplete: "During the Department's review of your application dated February 12, 2007, deficiencies were found." The Agreement State sought additional information regarding company personnel, the Radiation Safety Officer's authority to stop unsafe operations, and disposal procedures. The GAO indicated that regulators also insisted on interviews, physical inspections, and tours of the non-existent company's facilities. In total, the Agreement State licensing agency indicated that the process would take roughly 7 months. In light of the rigorous application process – in particular, the required physical inspection of the applicant's facilities – GAO elected to withdraw its application.

The application to the NRC, in contrast, was subjected to very little scrutiny. According to GAO's testimony, the NRC exchanged a couple of faxes and phone calls with the "company executive." Satisfied with that cursory review, the NRC mailed the materials license to the company's "headquarters," which was a drop-box at a retail UPS location. From the date of application to the issuance of the license, the entire process lasted 28 days. GAO investigators essentially obtained a valid materials license from the NRC without ever leaving their desks.

COMPARISON OF REVIEWS CONDUCTED BY NRC AND AGREEMENT STATE		
	Agreement State	**NRC**
Length of Review	7 months[31]	28 days
Physical Inspection?	Yes	No
License Received?	No	Yes

[31] As noted above, the State regulator informed the GAO investigators, who were acting in a clandestine manner, that the licensing process would take 7 months and that it required a physical inspection of the applicant's facilities. In light of the exhaustive nature of the impending review, GAO investigators elected to withdraw the application to that State on behalf of the phony entity. In other words, a site visit was requested by the State agency, but no actual inspection occurred.

B. COUNTERFEITING THE NRC LICENSE

After receiving the valid NRC license, GAO investigators then counterfeited it. Using off-the-shelf computer software, they scanned the license into a computer, created multiple facsimiles to purchase radioactive material, and removed the limits on the quantities of source materials authorized to be purchased. Redacted copies of the authentic NRC license and one of the counterfeited GAO documents are reproduced below. The key difference between the two documents is in Sections 8(A) and 8(B), in which the maximum amounts in the valid license are removed in the counterfeited version.

COMPARISON OF VALID NRC LICENSE AND COUNTERFEITED GAO LICENSE

Valid License Issued by NRC (Redacted)	License Counterfeited by GAO (Redacted)
NRC FORM 374 U.S. NUCLEAR REGULATORY COMMISSION PAGE 1 OF 4 PAGES MATERIALS LICENSE Pursuant to the Atomic Energy Act of 1954, as amended, the Energy Reorganization Act of 1974 (Public Law 93-438), and Title 10, Code of Federal Regulations, Chapter I, Parts 30, 31, 32, 33, 34, 35, 36, 39, 40, and 70, and in reliance on statements and representations heretofore made by the licensee, a license is hereby issued authorizing the licensee to receive, acquire, possess, and transfer byproduct, source, and special nuclear material designated below; to use such material for the purpose(s) and at the place(s) designated below; to deliver or transfer such material to persons authorized to receive it in accordance with the regulations of the applicable Part(s). This license shall be deemed to contain the conditions specified in Section 183 of the Atomic Energy Act of 1954, as amended, and is subject to all applicable rules, regulations, and orders of the Nuclear Regulatory Commission now or hereafter in effect and to any conditions specified below. Licensee 1. [redacted] Inc. 2. [redacted] 3. License number [redacted] 4. Expiration date March 31, 2017 5. Docket No. [redacted] Reference No. 6. Byproduct, source, and/or special nuclear material 7. Chemical and/or physical form 8. Maximum amount that licensee may possess at any one time under this license A. Cesium 137 A. Sealed Sources [redacted] A. 60 millicuries total, and no single source to exceed the maximum activity specified in the device's certificate of registration issued by the U.S. Nuclear Regulatory Commission or an Agreement State B. Americium 241 B. Sealed Sources [redacted] B. 200 millicuries total, and no single source to exceed the maximum activity specified in the device's certificate of registration issued by the U.S. Nuclear Regulatory Commission or an Agreement State 9. Authorized use: A. and B. In Troxler Electronic Laboratories Models 3400 series, and 4640B, and CPN International Model MC series portable gauging devices for measuring physical properties of materials.	NRC FORM 374 U.S. NUCLEAR REGULATORY COMMISSION PAGE 1 OF 4 PAGES MATERIALS LICENSE Pursuant to the Atomic Energy Act of 1954, as amended, the Energy Reorganization Act of 1974 (Public Law 93-438), and Title 10, Code of Federal Regulations, Chapter I, Parts 30, 31, 32, 33, 34, 35, 36, 39, 40, and 70, and in reliance on statements and representations heretofore made by the licensee, a license is hereby issued authorizing the licensee to receive, acquire, possess, and transfer byproduct, source, and special nuclear material designated below; to use such material for the purpose(s) and at the place(s) designated below; to deliver or transfer such material to persons authorized to receive it in accordance with the regulations of the applicable Part(s). This license shall be deemed to contain the conditions specified in Section 183 of the Atomic Energy Act of 1954, as amended, and is subject to all applicable rules, regulations, and orders of the Nuclear Regulatory Commission now or hereafter in effect and to any conditions specified below. Licensee 1. [redacted] 2. [redacted] 3. License number [redacted] 4. Expiration date March 31, 2017 5. Docket No. [redacted] Reference No. 6. Byproduct, source, and/or special nuclear material 7. Chemical and/or physical form 8. Maximum amount that licensee may possess at any one time under this license. A. Cesium 137 A. Sealed Sources [redacted] A. No single source to exceed the maximum activity specified in the device's certificate of registration issued by the U.S. Nuclear Regulatory Commission or an Agreement State B. Americium 241 B. Sealed Sources [redacted] B. No single source to exceed the maximum activity specified in the device's certificate of registration issued by the U.S. Nuclear Regulatory Commission or an Agreement State 9. Authorized use: A. and B. In Troxler Electronic Laboratories Models 3400 series, and 4640B, and CPN International Model MC series portable gauging devices for measuring physical properties of materials.

After altering the quantity of allowable source material, GAO investigators contracted with two different companies to purchase a significant number of portable moisture density gauges.[32] Those gauges, in the aggregate, contain an amount of americium-241 and cesium-137 that is vastly in excess of the amount authorized on the original NRC license. The aggregate amount of radioactive materials that the GAO contracted to buy would meet the NRC's definition of a "dangerous" quantity and would be sufficient to construct a dirty bomb.

Even though the amount of radioactive materials would have been sufficient for a dirty bomb, the amount of the radioactive materials sought in the GAO operation is actually understated. Investigators indicated that they could have easily prolonged their effort, generating dozens of fake licenses, visiting multiple suppliers, and stockpiling significantly higher amounts of this (and potentially more radioactive) material. The GAO states that it could have purchased "substantially more radioactive source material," possibly enough to reach the threshold of a "very dangerous" quantity. In other words, the modest amount of radioactive materials that GAO sought to purchase was but a demonstration amount, and it could have been considerably larger.

In conjunction with its clandestine operation, the GAO made the following recommendations to the NRC:

1. The NRC needs to "develop improved guidance for examining NRC license applications [in order] to provide reasonable assurance that licenses for radioactive materials will only be issued to those with legitimate uses."
2. The NRC should conduct "periodic oversight of license application examiners so that the NRC will be assured that any new guidance is being appropriately applied."
3. The NRC should "explore options to prevent individuals from counterfeiting NRC licenses, especially if this allows the purchase of more radioactive materials than they are approved for under the terms of the original license."

C. Following The 2007 Investigation, NRC Revises Its Licensing Process

Several months ago, GAO informed the NRC of its most recent operation. Shortly thereafter, the NRC temporarily halted its licensing process and revised its licensing procedures. In particular, the NRC issued a Supplemental Interim Guidance to address "a recently identified gap in NRC's pre-license guidance" (Interim Guidance).[33] The principal

---

[32] GAO declined to take actual possession of the radioactive materials.

[33] *See* NRC, *Supplemental Interim Guidance for Checklist to Ensure that Radioactive Materials Will Be Used as Intended*, NUREG-1556, Volume 20, Appendix C, June 12, 2007.

change reflected in the Interim Guidance is a modest increase in the scrutiny of new applications for specific licenses for Categories 3 and 4 sources. Before June 2007, no site visits were required for Category 3 or 4 applicants before a license was issued and the first visit to a licensed facility could occur up to 12 months after license issuance. The Interim Guidance changes that process and requires that reviewers conduct pre-licensing "visits" with applicants:[34]

> [T]his supplemental interim guidance now requires that all applications for a new license will have a pre-licensing visit or meeting. The purpose of this visit is to verify the information provided by the applicant to assure that the radioactive materials will be used as intended.[35]

To be clear, however, the Interim Guidance does not necessarily require that the reviewer's "visit" include a physical inspection of an applicant's facilities.[36] Instead, a reviewer may satisfy the "visit" requirement by meeting with an agent of the applicant in an NRC office.[37]

V. RECOMMENDATIONS

A. THE NRC SHOULD REEVALUATE THE APPARENT GOOD-FAITH PRESUMPTION THAT PERVADES ITS LICENSING PROCESS.

An examination of the NRC's administration of materials licensing reveals one paramount theme: the NRC licensing procedures appear to assume that all applicants are acting in good faith and do not harbor malicious motives. Indeed, it appears that there is an insufficient degree of institutional skepticism and, therefore, little in the way of a true screening process. For instance, as described above, the NRC's Licensing Guidance spoon-feeds applicants with model language and stock responses to application queries in order to streamline the licensing process. Summarizing the licensing process, one GAO investigator stated, "It's a paperwork process asking for boilerplate."

Another sign of the NRC's assumption of good faith is that physical inspection of an applicant's facilities can occur up to one year after a license has been issued. GAO highlighted this very concern in 2003:

---

[34] *See id.*

[35] *See id.*

[36] *See id.*

[37] *See id.*

> [W]e found a potential security weakness in NRC's licensing process to obtain sealed sources. The process assumes an applicant is acting in good faith and allows applicants to acquire sealed sources as soon as a new license is issued by mail. It can then take NRC as long as 12 months to conduct its first inspection, leaving the possibility that materials will be obtained and used maliciously in the meantime.[38]

Similarly, the NRC-IG found that the NRC's adoption of the IAEA category system (which, as noted above, excludes important categories of harm) does not sufficiently account for potential bad actors, such as terrorists: "By its very definition, such an approach would discount the intentions and capabilities of a malevolent entity bent on obtaining byproduct material that could be used in a dirty bomb."[39]

The NRC has shown a willingness to consider these concerns. For instance, as noted above, it recently revised its licensing procedures to require a physical inspection or at least a face-to-face meeting before the issuance of a materials license. More steps, however, are needed.

B. THE NRC SHOULD REGULATE CATEGORY 3 SOURCES MORE STRINGENTLY.

NRC licensing procedures governing Category 3 sources are not sufficiently rigorous. Category 3 sources deserve more stringent regulation because they are more dangerous than the current category regime suggests. As noted above, the NRC's category system is based on the IAEA Code of Conduct.[40] That scale is based almost exclusively on one narrow category of harm: the immediate or near-immediate effects on human health. The system expressly excludes from its categorization criteria both (1) any probabilities of harm from delayed effects of radiation – termed "stochastic effects" – such as radiation-induced cancer developing later in life;[41] and (2) socioeconomic consequences resulting from the dispersion of radioactive material. Excluding those important categories of harm underestimates the potential impact of the dispersal of a Category 3 source.

The NRC-IG articulates that very conclusion in a 2007 report, concluding that the "NRC policy for evaluating the risks of dirty bombs

---

[38] *See id.*

[39] *See* NRC Inspector General 2007 Report.

[40] *See* GAO September 2005 Report, IAEA Code of Conduct and IAEA Categorization of Radioactive Sources.

[41] *See id.*

... does not recognize all of the potential effects of a dirty bomb."[42] The IG report lamented that the NRC policy took into account only "prompt fatalities." The report also stated:

> When questioned by Government auditors or elected officials about the bases of its security-related actions or about its efforts to identify and close vulnerabilities in its material licensing and tracking programs, NRC has consistently pointed to a "graded, risk-informed" approach to byproduct material security. For NRC, the "graded, risk-informed" approach results in the identification of "risk-significant" or "highrisk" sources, equivalent to IAEA Category 1 and 2 sources. NRC's "graded, risk-informed" approach discounts factors related to malevolent terrorist intentions because the agency focuses the performance of its mission—including those related to common defense and security—to scientific and engineering evaluations of licensed activities that use radioactive material. Indeed, the agency notified the House Committee on Government Reform that factors—such as psychological, social, and economic effects—can vary and provide a less stable measure for establishing security measures. By its very definition, such an approach would discount the intentions and capabilities of a malevolent entity bent on obtaining byproduct material that could be used in a dirty bomb.[43]

The IG report also stated that "measuring dirty bomb consequences without consideration of these additional consequences [*i.e.*, technical, socioeconomic, psychological, environmental and other effects] causes the NRC to understate the risk these weapons pose to national security."[44]

There is currently no mechanism to prevent malevolent actors from stockpiling numerous lower-risk sources well beyond the limits

---

[42] *See* NRC Inspector General 2007 Report.

[43] *See* NRC Inspector General 2007 Report. Notably, the Inspector General has questioned the efficacy of NRC's "risk-informed" categorization regime, noting that "although the staff states that the approach is risk-informed, OIG has not been presented with any documentary evidence of a risk assessment." *See* NRC Office of the Inspector General, *Audit Report – Audit of the Development of the National Source Tracking System*, OIG-06-A-10, February 23, 2006 (the "NRC Inspector General Feb. 2006 Report").

[44] *See id.*

authorized in the license. This methodical aggregation could allow a terrorist to "fly beneath the radar" and avoid regulation and detection while accumulating more and more source material. This report offers recommendations regarding a web-based licensing system that would minimize this risk.

Considering that the categorization system does not address the full scope of the impact of radioactive dispersal and that there is no mechanism to prevent aggregation of lower-risk sources, the NRC should subject Category 3 sources to heightened scrutiny. In particular, the NRC should regulate Category 3 sources more carefully by (1) requiring an *on-site visit* before a Category 3 license is issued and (2) considering incorporating Category 3 sources into the National Source Tracking System.

1. The NRC Should Physically Inspect Applicants' Facilities *Before* The Issuance Of A Category 3 Materials License.

As noted above, under the current category system, applications for Categories 1 and 2 sources receive substantially heightened scrutiny from NRC reviewers. Category 3 sources should be similarly regulated. For instance, at the time of the GAO's 2007 operation, the NRC did not require physical inspection of licensee facilities prior to the issuance of licenses for Category 3 sources; the only on-site visit would generally take place during the 12-month period *after* issuance of a license. In contrast, many Agreement States verify the legitimacy of potential licensees via either pre-licensing inspection or hand delivery of the licenses. This is a crucial difference, since a licensee can make purchases as soon as a license is received in the mail – *i.e*, before the NRC has verified the legitimacy of the applicant.

To its credit, the NRC's recently-issued Interim Guidance makes strides in the direction of mandatory inspections of facilities seeking licenses. Specifically, it requires NRC reviewers to visit with applicants face-to-face before the issuance of a license. That Interim Guidance, however, contains a significant loophole – namely, that "all applications for a new license will have a pre-licensing visit *or meeting*."[45] Therefore, the "visit" requirement could be satisfied without an on-site physical inspection of an applicant's facilities but rather an in-person interview at NRC offices. For applications involving Category 3 sources and above, the standard procedure – perhaps allowing for rare exceptions – should require an on-site physical inspection of an applicant's facilities before the issuance of a license.

---

[45] *See* NRC *Supplemental Interim Guidance* (emphasis added).

2. The NRC Should Consider Including Category 3 Sources in the Proposed National Source Tracking System.

Under the current regulatory regime, NRC licensees are not required to report radioactive material inventories to NRC. As a result, there is no mechanism for the government to track radioactive materials from cradle to grave – *i.e.*, the manufacture, transport, receipt, disassembly, and disposal of sealed sources. Without such a tracking mechanism, radioactive sources can end up anywhere from landfills to terrorist cells.

Recognizing the importance of tracking certain source materials, the Department of Energy (DOE) and NRC established an Interagency Working Group on RDDs in July 2002. This working group explored the possibility of creating a nationwide system that would track radioactive sources and recommended that NRC develop such a tracking system "to better understand and monitor the location and movement of certain radioactive sources."[46] In response, the NRC adopted plans for a National Source Tracking System (NSTS), which would be a web-based system containing cradle-to-grave information on high-risk sealed sources. The proposed NSTS as currently planned, however, will track only Category 1 and 2 sources.

The NRC-IG recently noted that the omission of Category 3 sources from the NSTS is "another gap in the agency's approach to material security."[47] Moreover, the GAO noted an inconsistency with the exclusion of Category 3 sources from NSTS, stating "the aggregate radioactivity of co-located individual sources poses enough of a safety and security risk to warrant their recovery by DOE, but the sources will not be tracked in NSTS because they are not Category 1 or 2 sources."[48] The Health Physics Society (HPS), an independent scientific organization of radiation safety professionals, also noted that the NRC should consider including Category 3 sources in the proposed NSTS "because of the potential for unacceptable personal injury, economic, or social consequences from a mismanaged or poorly secured individual Category 3 source."[49]

> The HPS recommends that, because of the potential for unacceptable personal injury, economic, or social consequences from a mismanaged or poorly secured individual

---

[46] *See* NRC Inspector General Feb. 2006 Report.

[47] *See* NRC Inspector General 2007 Report.

[48] *See* GAO, *Nuclear Security: DOE Needs Better Information to Guide Its Expanded Recovery of Sealed Radiological Sources*, GAO-05-967, September 22, 2005.

[49] *See* Health Physics Society, *Continued Federal And State Action Is Needed For Better Control Of Radioactive Sources*, PS021-0, January 2006.

> Category 3 source, the NRC should be consistent with the approach of the IAEA and consider that Category 3 sources warrant inclusion in the tracking system, unless an analysis can demonstrate that the large number of such sources and the economic cost for tracking them would be overly burdensome. If the analysis demonstrates that the inclusion of all Category 3 sources is not justified on an economic basis, an evaluation should be performed as to how aggregate quantities of Category 3 sources that roll up to Category 1 or 2 thresholds can be identified and included in the tracking system or to identify if there are alternatives other than an "all or nothing" approach. For example, the analysis might identify some types of Category 3 sources that could be excluded while others should appropriately be included in the tracking system or may identify alternatives to the National Source Tracking System that accomplish the same results for these sources.[50]

The issue of whether some or all Category 3 sources should be included in NSTS has generated significant debate within the NRC and in written comments submitted by Agreement States and experts. To date, the NRC has not decided the extent to which Category 3 sources will be tracked. Key concerns include the cost and logistics involved in tracking Category 3 materials, whether tracking those materials would divert attention and resources from more dangerous Category 1 and 2 materials, and whether it would make sense to track some but not all Category 3 sources. The NRC should continue to work with all stakeholders to determine the feasibility of Category 3 inclusion and to conduct appropriate cost-benefit analyses. It is important, however, to resolve this matter in the near future so that the NSTS, already 5 years in the planning, can be deployed as soon as possible.

C. THE NRC SHOULD ACT QUICKLY TO ESTABLISH A WEB-BASED LICENSING SYSTEM TO ENSURE THAT SOURCE MATERIALS CAN BE OBTAINED ONLY IN AUTHORIZED AMOUNTS BY LEGITIMATE USERS.

Counterfeit NRC materials licenses were the common denominator of both the 2006 and 2007 GAO clandestine operations. Preventing the use of altered licenses remains a serious obstacle to securing radioactive material. Numerous witnesses interviewed by the Subcommittee

---

[50] *Id.*

indicated that many companies use multiple radioactive devices scattered among hundreds of worksites, each of which house copies of the NRC materials license. Moreover, customers and suppliers are typically separated by great distances (sometimes thousands of miles), and therefore, most transactions are completed with phone calls and faxed copies of NRC licenses. This is why the GAO had no trouble at all passing counterfeit licenses off as authentic in both the 2006 and 2007 operations – faded copies and smudged faxes are standard operating procedure when it comes to NRC licenses.

In light of the fact that these licenses will inevitably be copied and faxed repeatedly, the solution cannot lie in simply including watermarks and improving defenses in the document itself. Such solutions might be sufficient only insofar as an original license was being examined, not a fourth-generation fax thereof. To the contrary, the answer to preventing the use of counterfeit licenses must lie in creating a mechanism by which suppliers and law enforcement officials can verify that a proffered license is in fact authentic.

One such mechanism is a web-based licensing system. A web-based system, which is currently under development by the NRC, would close two glaring loopholes in the effort to reduce the unauthorized transfer and possession of radioactive materials. First, it would permit suppliers of radioactive materials to access a secure, NRC database to confirm, in real time, a license's authenticity. Suppliers, law enforcement officials, and Federal and State regulators, using such a system, could confirm within minutes (1) the name of the authorized user; (2) the name and authorized amount of the source material; and (3) the type and number of devices the licensee is entitled to purchase.

Second, a web-based system would reduce the possibility of aggregation – *i.e.*, a licensee avoiding regulation by stockpiling low-risk radioactive material by repeatedly purchasing the maximum allowable amount from multiple suppliers. In other words, such a system would enable suppliers and regulators alike to track a licensee's purchases and confirm – again, in real time – whether the licensee has already met or exceeded the license's maximum allowable amount.

VI. CONCLUSION

The recommendations in this report are designed to bolster our government's efforts to prevent a radiological attack in the United States. It is clear that terrorists are interested in using a dirty bomb to wreak havoc in this country. In the words of one homeland security expert, the impact of such an attack – even a relatively simple and small dirty bomb – could be a "nightmare scenario."[51] As a result, the

[51] *See* Richard Falkenrath, Deputy Commissioner for Counterterrorism of the New York City Police Department and former Deputy Homeland Security Adviser to President George W.

government must be more vigilant in regulating and tracking radioactive materials in the United States. One critical step is to prevent America's enemies from acquiring radioactive materials in the first place. To that end, the NRC should focus on ensuring that such materials can be obtained only in authorized amounts by legitimate users. These measures will help ensure that the "nightmare scenario" of a dirty bomb attack never occurs.

Bush, *quoted in* Jon Fox, Global Security Newswire, "*'Dirty Bomb' Could Be Disastrous, NYPD Official Says*," June 13, 2007.

COMPARISON OF VALID NRC LICENSE AND COUNTERFEITED GAO LICENSE

Valid License Issued by NRC (Redacted)	License Counterfeited by GAO (Redacted)

NRC FORM 374 — U.S. NUCLEAR REGULATORY COMMISSION — PAGE 1 OF 4 PAGES

MATERIALS LICENSE

Pursuant to the Atomic Energy Act of 1954, as amended, the Energy Reorganization Act of 1974 (Public Law 93-438), and Title 10, Code of Federal Regulations, Chapter I, Parts 30, 31, 32, 33, 34, 35, 36, 39, 40, and 70, and in reliance on statements and representations heretofore made by the licensee, a license is hereby issued authorizing the licensee to receive, acquire, possess, and transfer byproduct, source, and special nuclear material designated below; to use such material for the purpose(s) and at the place(s) designated below; to deliver or transfer such material to persons authorized to receive it in accordance with the regulations of the applicable Part(s). This license shall be deemed to contain the conditions specified in Section 183 of the Atomic Energy Act of 1954, as amended, and is subject to all applicable rules, regulations, and orders of the Nucleur Regulatory Commission now or hereafter in effect and to any conditions specified below.

License

1. [redacted] Inc.
2. [redacted]
3. License number [redacted]
4. Expiration date March 31, 2017
5. Docket No. [redacted]
Reference No.

6. Byproduct, source, and/or special nuclear material	7. Chemical and/or physical form	8. Maximum amount that licensee may possess at any one time under this license.
A. Cesium 137	A. Sealed Sources [redacted]	A. 86 millicuries total, and no single source to exceed the maximum activity specified in the device's certificate of registration issued by the U.S. Nuclear Regulatory Commission or an Agreement State
B. Americium 241	B. Sealed Sources [redacted]	B. 200 millicuries total, and no single source to exceed the maximum activity specified in the device's certificate of registration issued by the U.S. Nuclear Regulatory Commission or an Agreement State

9. Authorized use:

A. and B. In Troxler Electronic Laboratories Models 3400 series, and 4640B, and CPN International Model MC series portable gauging devices for measuring physical properties of materials.

NRC FORM 374 — U.S. NUCLEAR REGULATORY COMMISSION — PAGE 1 OF 4 PAGES

MATERIALS LICENSE

Pursuant to the Atomic Energy Act of 1954, as amended, the Energy Reorganization Act of 1974 (Public Law 93-438), and Title 10, Code of Federal Regulations, Chapter I, Parts 30, 31, 32, 33, 34, 35, 36, 39, 40, and 70, and in reliance on statements and representations heretofore made by the licensee, a license is hereby issued authorizing the licensee to receive, acquire, possess, and transfer byproduct, source, and special nuclear material designated below; to use such material for the purpose(s) and at the place(s) designated below; to deliver or transfer such material to persons authorized to receive it in accordance with the regulations of the applicable Part(s). This license shall be deemed to contain the conditions specified in Section 183 of the Atomic Energy Act of 1954, as amended, and is subject to all applicable rules, regulations, and orders of the Nuclear Regulatory Commission now or hereafter in effect and to any conditions specified below.

License

1. [redacted]
2. [redacted]
3. License number [redacted]
4. Expiration date March 31, 2017
5. Docket No. [redacted]
Reference No.

6. Byproduct, source, and/or special nuclear material	7. Chemical and/or physical form	8. Maximum amount that licensee may possess at any one time under this license.
A. Cesium 137	A. Sealed Sources [redacted]	A. No single source to exceed the maximum activity specified in the device's certificate of registration issued by the U.S. Nuclear Regulatory Commission or an Agreement State
B. Americium 241	B. Sealed Sources [redacted]	B. No single source to exceed the maximum activity specified in the device's certificate of registration issued by the U.S. Nuclear Regulatory Commission or an Agreement State

9. Authorized use:

A. and B. In Troxler Electronic Laboratories Models 3400 series, and 4640B, and CPN International Model MC series portable gauging devices for measuring physical properties of materials.

Permanent Subcommittee on Investigations
EXHIBIT #2

RESPONSES TO SUPPLEMENTAL QUESTION FOR THE RECORD
FROM
SENATOR DANIEL K. AKAKA
to
THE HONORABLE EDWARD McGAFFIGAN, JR.
Commissioner
Nuclear Regulatory Commission

PERMANENT SUBCOMMITTEE ON INVESTIGATIONS
HEARING ON
DIRTY BOMB VULNERABILITIES:
FAKE COMPANIES, FAKE LICENSES, REAL CONSEQUENCES
July 12, 2007

1. **In Mr. Kutz's testimony before the Subcommittee, he stated that suppliers of machines that contained radioactive sources believe that it is not their job to ensure the validity of NRC licenses. He added that the establishment of a web-based system would assist suppliers in verifying the bona fides of licensees before orders were filled.**

   I am not confident that this will address the problem. Supplier companies should ensure that the licensees they supply are legitimate as part of their corporate responsibility. There are a number of companies that provide controlled technologies in the nuclear field that have taken it upon themselves to report suspicious requests to the relevant authorities.

   In pursuit of a "layered defense" against theft and misuse of radioactive material, what is the NRC is doing or could do to assist suppliers in developing such behavior?

   RESPONSE: We acknowledge that the verification process can be improved and NRC staff is preparing a comprehensive integrated action plan to identify potential vulnerabilities and to develop solutions for NRC and Agreement States materials licensing programs. This plan will include a combination of short and long term actions to improve the national materials licensing program, including possible future enhancements to the regulations. Web-Based-Licensing will be an important component of these actions.

   NRC and the Agreement States use Information Notices (IN), among other means, to communicate to its licensees and to raise awareness when current events warrant For example, on July 6, 2006 NRC issued an IN to all material licensees to emphasize that due diligence should be exercised before and during transfer of radioactive material. This IN alerted licensees to exercise extra caution to assure that only legitimate, licensed entities are on the receiving end of the transfer of the licensed material. NRC is preparing to issue another IN to all materials licensees to heighten their sensitivity to the vulnerability in our licensing process identified by GAO.

Permanent Subcommittee on Investigations
EXHIBIT #3

I would also call your attention to letters sent after the hearing by the largest manufacturer of moisture-density gauges – Troxler Electronic Laboratories, Incorporated – to the subcommittee and the NRC. Mr. William F. Troxler, Jr., the company chairman and president, indicates that his company was not fooled by the GAO sting, and would not have supplied the gauges to the fake GAO company. In his letter to NRC, Mr. Troxler also makes several suggestions for improved controls which have arisen from his conversations with North Carolina regulators. The NRC staff will evaluate his and North Carolina's suggestions in developing NRC's action plan.

2. **During the hearing, Mr. Cooney of GAO stated that, had he met with NRC licensing reviewers directly prior to issuance of the license for the fake company, he would have been able to fool them into believing that the company and the license request were legitimate. This makes me concerned about the skills that NRC license reviewers have. The procedures NRC has in place for reviewers to ensure that companies requesting licenses seems not to be effective, as was shown in the GAO investigation.**

   Can you tell me what the NRC is doing to better train license reviewers to detect bogus requests from illegitimate companies?

   RESPONSE: In response to the GAO investigation, NRC temporarily stopped issuing licenses, and developed and issued a supplemental procedure that now requires pre-licensing visits or Regional office meetings for essentially all applicants. All license reviewers are aware of the new guidance for license application reviews.

   The increased use of site visits before issuing new licenses is part of the revised license review procedure. The exception to performing a pre-licensing site visit is when an application for a new license is received from an existing licensee that is in good standing. The reviewer must be confident from previously established licensing and inspection experience and knowledge of the licensee, that the material will be used for its intended purpose.

   To ensure a comprehensive long-term solution is reached, NRC has worked with the Agreement States to re-establish the Pre-License Guidance Working Group which will re-evaluate the guidance issued in December 2006 and the recent June 2007 supplemental guidance and procedure, and will address the issues uncovered by the GAO investigation. Through Regional training sessions, NRC will assure that its license reviewers are thoroughly familiar with the guidance developed by this group.

# # #

○