S. HRG. 111–496

# CELL PHONE TEXT MESSAGING RATE INCREASES AND THE STATE OF COMPETITION IN THE WIRELESS MARKET

## HEARING

BEFORE THE

SUBCOMMITTEE ON ANTITRUST, COMPETITION POLICY AND CONSUMER RIGHTS

OF THE

COMMITTEE ON THE JUDICIARY
UNITED STATES SENATE

ONE HUNDRED ELEVENTH CONGRESS

FIRST SESSION

JUNE 16, 2009

**Serial No. J–111–32**

Printed for the use of the Committee on the Judiciary

U.S. GOVERNMENT PRINTING OFFICE

56–833 WASHINGTON : 2010

For sale by the Superintendent of Documents, U.S. Government Printing Office
Internet: bookstore.gpo.gov Phone: toll free (866) 512–1800; DC area (202) 512–1800
Fax: (202) 512–2104 Mail: Stop IDCC, Washington, DC 20402–0001

VerDate Nov 24 2008 11:47 Jun 28, 2010 Jkt 056833 PO 00000 Frm 00001 Fmt 5011 Sfmt 5011 S:\GPO\HEARINGS\56833.TXT SJUD1 PsN: CMORC

PATRICK J. LEAHY, Vermont, *Chairman*

HERB KOHL, Wisconsin
DIANNE FEINSTEIN, California
RUSSELL D. FEINGOLD, Wisconsin
CHARLES E. SCHUMER, New York
RICHARD J. DURBIN, Illinois
BENJAMIN L. CARDIN, Maryland
SHELDON WHITEHOUSE, Rhode Island
RON WYDEN, Oregon
AMY KLOBUCHAR, Minnesota
EDWARD E. KAUFMAN, Delaware
ARLEN SPECTER, Pennsylvania

JEFF SESSIONS, Alabama
ORRIN G. HATCH, Utah
CHARLES E. GRASSLEY, Iowa
JON KYL, Arizona
LINDSEY O. GRAHAM, South Carolina
JOHN CORNYN, Texas
TOM COBURN, Oklahoma

BRUCE A. COHEN, *Chief Counsel and Staff Director*
MATT MINER, *Republican Chief Counsel*

---

SUBCOMMITTEE ON ANTITRUST, COMPETITION POLICY AND CONSUMER RIGHTS

HERB KOHL, Wisconsin, *Chairman*

CHARLES E. SCHUMER, New York
SHELDON WHITEHOUSE, Rhode Island
RON WYDEN, Oregon
AMY KLOBUCHAR, Minnesota
EDWARD E. KAUFMAN, Delaware
ARLEN SPECTER, Pennsylvania

ORRIN G. HATCH, Utah
CHARLES E. GRASSLEY, Iowa
TOM COBURN, Oklahoma

CAROLINA HOLLAND, *Democratic Chief Counsel/Staff Director*
JACE JOHNSON, *Republican Chief Counsel*



VerDate Nov 24 2008 11:47 Jun 28, 2010 Jkt 056833 PO 00000 Frm 00002 Fmt 5904 Sfmt 5904 S:\GPO\HEARINGS\56833.TXT SJUD1 PsN: CMORC

# CONTENTS

## STATEMENTS OF COMMITTEE MEMBERS


| | Page |
|---|---|
| Feingold, Hon. Russell D., a U.S. Senator from the State of Wisconsin, prepared statement | 49 |
| Kohl, Hon. Herb, a U.S. Senator from the State of Wisconsin | 1 |
| prepared statement | 121 |


## WITNESSES


| | |
|---|---|
| Itkin, Laurie, Director of Government Affairs, Cricket Communications, Inc., San Diego, California | 8 |
| Kelsey, Joel, Policy Analyst, Consumers Union New York, New York | 10 |
| Keshav, Srinivasan, Professor and Canada Research Chair in Tetherless Computing, School of Computer Science, University of Waterloo, Waterloo, Ontario, Canada | 7 |
| Milch, Randal S., Executive Vice President and General Counsel, Verizon Communications, Inc., New York, New York | 5 |
| Watts, Wayne W., Sr., Executive Vice President, and General Counsel, AT&T Management Services, Inc., Dallas, Texas | 3 |


## QUESTIONS AND ANSWERS


| | |
|---|---|
| Responses of Laurie Itkin to questions submitted by Senator Kohl | 28 |
| Responses of Joel Kelsey to questions submitted by Senator Kohl | 31 |
| Responses of Randal S. Milch to questions submitted by Senator Kohl | 37 |
| Responses of Wayne W. Watts, Sr., to questions submitted by Senator Kohl | 43 |


## SUBMISSIONS FOR THE RECORD


| | |
|---|---|
| Itkin, Laurie, Director of Government Affairs, Cricket Communications, Inc., San Diego, California, statement | 50 |
| Kelsey, Joel, Policy Analyst, Consumers Union New York, New York, statement and addendum | 61 |
| Keshav, Srinivasan, Professor and Canada Research Chair in Tetherless Computing, School of Computer Science, University of Waterloo, Waterloo, Ontario, Canada, statement | 111 |
| Milch, Randal S., Executive Vice President and General Counsel, Verizon Communications, Inc., New York, New York, statement | 123 |
| Watts, Wayne W., Sr., Executive Vice President, and General Counsel, AT&T Management Services, Inc., Dallas, Texas, statement | 141 |




VerDate Nov 24 2008 11:47 Jun 28, 2010 Jkt 056833 PO 00000 Frm 00003 Fmt 5904 Sfmt 5904 S:\GPO\HEARINGS\56833.TXT SJUD1 PsN: CMORC

# CELL PHONE TEXT MESSAGING RATE INCREASES AND THE STATE OF COMPETITION IN THE WIRELESS MARKET

**TUESDAY, JUNE 16, 2009**

U.S. SENATE,
SUBCOMMITTEE ON ANTITRUST, COMPETITION POLICY, AND CONSUMER RIGHTS,
COMMITTEE ON THE JUDICIARY,
*Washington, D.C.*

The Subcommittee met, pursuant to notice, at 2:34 p.m., in room SD–226, Dirksen Senate Office Building, Hon. Herb Kohl, Chairman of the Subcommittee, presiding.

Present: Senators Kohl, Klobuchar, and Hatch.

## OPENING STATEMENT OF HON. HERB KOHL, A U.S. SENATOR FROM THE STATE OF WISCONSIN

Chairman KOHL. Good afternoon. This hearing will come to order.

Today we will be examining the state of competition in the cell phone industry. The enormous growth in the use of cell phones means that maintaining competition in this industry is more important than ever. With more than 270 million subscribers, cell phones are a vital means of communication for the vast majority of Americans. Cell phones enable instantaneous communications for millions wherever they are located, whether at work, at home, away from home, in their car, or anywhere in between. Many Americans—over 20 percent now—have now discarded traditional land line phones and depend entirely on their cell phones. The ease, convenience, and universal nature of today's cell phone service would not have been imaginable just two decades ago.

For many years as this industry developed, it was a competition success story—with many rivals and vigorous price competition. In recent years, however, the picture has changed. Consolidation has left this industry highly concentrated. Four national carriers now control over 90 percent of the cell phone market. Two of them—today's witnesses AT&T and Verizon—combine to have a market share of 60 percent. Consumers' choices have become quite limited, and price wars seem to be a thing of the past. American consumers pay more for wireless phone service than most other developed nations—an average of $506 per year in the year 2007.

Nowhere is the changed market for cell phones more noticeable than in text message service. These short, instant messages delivered via cell phones have become enormously popular. In 2008,



VerDate Nov 24 2008 11:47 Jun 28, 2010 Jkt 056833 PO 00000 Frm 00005 Fmt 6633 Sfmt 6633 S:\GPO\HEARINGS\56833.TXT SJUD1 PsN: CMORC

more than 1 trillion text messages were sent, more than triple the number of just 2 years ago.

As their popularity has grown, so has the price charged on a per message basis. From 2006 to 2008, the price of sending and receiving a text message among the four largest cell phone carriers increased by 100 percent—from 10 to 20 cents a message. The four companies increased their text messaging prices in two steps—first from 10 to 15 cents, and then from 15 to 20 cents—within weeks or months of each other. These lockstep price increases occurred despite the fact that the cost to the phone companies to carry text messages is minimal—estimated to be less than a penny per message—and has not increased.

The phone companies defend these price increases by asserting that they have not been coordinated in any respect. They also point out that the majority of cell phone customers do not pay for text messages on a per message basis, but instead buy plans for "buckets" of text messages, typically starting at $5 for 200 messages. Nonetheless, these sharp price increases raise concerns.

Are these price increases the result of a lack of competition in a highly concentrated market? Will consumers continue to see similar price increases for this and many other wireless services that they have become increasingly dependent upon, such as Internet connections and basic voice service? Do text message price increases represent a warning sign for the state of competition in the cell phone industry as a whole?

The concentrated nature of today's cell phone market should make us wary of other challenges to competition in this industry. For example, smaller competitors raise serious questions about practices that prevent them from being able to fairly compete. These range from exclusive deals that deny competitors access to the most in-demand cell phones, to limitations on the ability of new competitors to roam on other providers' networks, to difficulties in obtaining needed spectrum. It is imperative that we work to remove undue barriers to competition to ensure consumers the best rates and services.

We, therefore, urge the FCC to take all necessary action to remove each of these barriers to competition. Removing these barriers will ensure that the cell phone market is open to competition and prevent the large carriers from gaining a stranglehold on this market. We also urge the Justice Department to closely scrutinize future mergers and allegations of anticompetitive practices in this industry.

Today's hearing thus comes at an important time for competition in the cell phone industry. We are looking forward to the testimony of our panel of witnesses on this important topic.

Now, with respect to our panel, we will introduce our first witness, who will be Wayne Watts. Mr. Watts is Senior Executive Vice President and General Counsel of AT&T. Previously, Mr. Watts served as Vice President and Assistant Counsel for SBC Communications and worked as an attorney at Southwestern Bell Telephone Company.

He will be followed by Randal Milch. Mr. Milch currently serves as Executive Vice President and General Counsel at Verizon Communications. He has been with Verizon since 2000, when he was

appointed Senior Vice President and General Counsel of Verizon's domestic telecom business.

Next, we will be hearing from Professor Keshav. Professor Keshav has been a professor at the School of Computer Science at the University of Waterloo since 2003. He has focused his research on tetherless computing, a broad research field that includes wireless networks and smart mobile devices, and he has received a number of awards for his research and his publications.

And next we will hear from Laurie Itkin. Ms. Itkin has served as Director of Government Affairs for Cricket Communications for the last 9 years. Prior to joining Cricket, Ms. Itkin managed governmental relations for Sprint and served as telecommunications policy adviser to the Governor of Oregon.

Finally, we will be hearing from Joel Kelsey. Mr. Kelsey is a Federal and international affairs policy analyst for Consumers Union. Before joining Consumers Union, he worked as the New York City Outreach Director for the New York Public Interest Research Group before joining Consumers Union.

We thank you all for appearing at our Subcommittee's hearing. And after each of you give your testimony, we will proceed to ask questions.

Would you now all rise and raise your right hand and repeat after me? Do you affirm that the testimony you are about to give will be the truth, the whole truth, and nothing but the truth, so help you God?

Mr. WATTS. I do.

Mr. MILCH. I do.

Mr. KESHAV. I do.

Ms. ITKIN. I do.

Mr. KELSEY. I do.

Chairman KOHL. Thank you. So we will start with you, Mr. Watts, and we hope you will hold your comments to 5 minutes.

## STATEMENT OF WAYNE W. WATTS, SR, EXECUTIVE VICE PRESIDENT, AND GENERAL COUNSEL, AT&T MANAGEMENT SERVICES, INC., DALLAS, TEXAS

Mr. WATTS. Well, good afternoon, Chairman Kohl, and thank you for the gracious introduction, and I appreciate very much your opening comments.

The Subcommittee's apparent concern over prices for text messaging I believe is based on an overly narrow focus on the pricing trend of a single pricing option for text messaging services—the pay-per-use, or PPU, option. PPU refers to the charge for individual text messages that customers purchase on a single-message basis.

AT&T's current price for PPU is 20 cents per text message. That rate did increase a little over a year ago, in March of 2008, and prior to that, it was increased in January of 2007. So, it has been quite a while since those rates changed.

However, the vast majority of AT&T's customers do not choose the PPU pricing option, and the PPU pricing option does not apply to the overwhelming majority of messages. In fact, less than 1 percent of AT&T's post-paid text messaging volume is handled on a

PPU basis. Less than 1 percent of the messages that our customers send are paid for this way.

Instead, the vast majority of our customers take advantage of AT&T's package pricing plans, including those that provide a package of messages for a flat monthly rate, and 99 percent of our messages are handled under these plans. These plans include: 200 messages per month for $5; 1,500 messages per month for $15, and unlimited messages for $20. Clearly, the price of messages under those plans are far below 20 cents per message. In fact, at AT&T, for $30 a month, a family of five can enjoy unlimited text messaging for the entire family. Clearly, very low rates per message.

As a result of this customer interest in these lower-cost, higher-value package plans, in the last 2 years the price for text messages has fallen dramatically. Indeed, AT&T's average price for text messaging has dropped almost 70 percent in 2 years. So that is 70 percent versus the suggestion that has been made that our prices per text message have gone up.

At the same time, the volume of text messages handled by AT&T has grown exponentially. In January of 2007, AT&T processed 4.5 billion text messages for the month. In January of 2009, we processed a stunning 31.1 billion text messages. That is a nearly 600-percent increase in just 2 years in the volume of messages sent by our customers.

Among the reasons for this dramatic increase in usage is the equally dramatic drop in prices paid by the overwhelming majority of our customers. Thus, the PPU price, which represents a minuscule portion of the total number of text messages has increased, albeit 15 months ago. But overall rates—the rates charged for 99 percent of our customers' text messages—have dropped dramatically.

The background here is very instructive. In making these package plans the core of our text message pricing, we are delivering maximum choice and value to our customers. In our experience, the PPU pricing option often results in large and unpredictable swings in a customer's total bill, leading to significant customer dissatisfaction and complaints to our customer care line. Package plans, on the other hand, which I believe are increasing in importance to the customers as they find more and more the need to budget their expenses, ensure extremely low prices, choice—because we offer so many different plans—predictability, and easy-to-understand bills, and thereby greatly improve the overall customer experience. Our customers have voted with their pocketbooks as 99 percent of the text messages sent or received by AT&T customers are billed under one of our package plans.

Of course, it should come as no surprise that the price of text messages has fallen off given the dynamic and competitive nature of today's wireless industry. More than 95 percent of the U.S. population lives in census blocs with at least three competing wireless carriers, and more than half the population lives in census blocks with at least five competing carriers. For these reasons, and many others, the FCC has confirmed time and again that the U.S. wireless marketplace is and will remain effectively competitive. Indeed, a recent Merrill Lynch report shows that the U.S. enjoys the least

concentrated wireless industry of 26 major industrial countries based on its HHI index.

Finally, against this backdrop, I have to pause to put to rest an underlying implication of the inquiry into this matter, and that is whether or not wireless providers have somehow conspired to fix prices for text messaging.

As you know, a great deal of litigation has been filed as a result of these hearings and this particular issue, and I want to make it perfectly clear that AT&T sets the prices for all of its products on a unilateral basis, based on independent analysis. There is no evidence to support an accusation that anyone at AT&T engaged in any inappropriate, much less illegal, behavior as alleged in all these lawsuits that are pending today. There simply is none.

I trust that this more complete picture puts to rest any concerns you may have about a single-pricing option, and I, as always, look forward to your questions, Mr. Chairman.

Thank you.

[The prepared statement of Mr. Watts appears as a submission for the record.]

Chairman KOHL. Thank you, Mr. Watts.

Mr. Milch?

**STATEMENT OF RANDAL S. MILCH, EXECUTIVE VICE PRESIDENT AND GENERAL COUNSEL, VERIZON COMMUNICATIONS, INC., NEW YORK, NEW YORK**

Mr. MILCH. Good afternoon, Chairman Kohl. It is a pleasure for me to appear before you today on behalf of Verizon Wireless.

We were brought here today to discuss industry pricing in a tiny segment of the burgeoning wireless texting, or SMS, market. Mr. Chairman, your letter of last year concerned pricing similarities in the so-called pay-as-you-go segment of the texting market, which involves only 1 percent of all the texts that Verizon Wireless customers send or receive. So let me respond directly to the underlying issue here.

Verizon did not collude with its competitors on setting pay-as-you-go prices for text messages, and I believe all the evidence shows any suggestion like that to be baseless. Indeed, the evidence amply confirms that the U.S. wireless industry is robustly competitive in all of its aspects.

Let me go through this with a little bit more detail.

First, the tiny nature of this market makes any suggestions of collusion implausible. Only 1 percent of the customers' text messages are paid for on a pay-as-you-go basis, and Verizon customers in this category on average send or receive only 21 texts per month. The other 99 percent of Verizon texts are covered by various bundles of services where the average price per text is less than a penny per text.

In contrast to incidental texters in the pay-as-you-go category, text users in bundles average almost 1,000 texts a month. Because of this greatly increased usage, the overall price for text messaging has dropped precipitously. In December 2006, the average price was about 3 cents per message. Since then, we have cut the average price by almost two-thirds, to about 1 cent per message.

Second, I have provided some charts with my testimony that I have provided the Committee, and those charts show that there is a wide variation in the carriers' texting prices overall. Pay-as-you-go prices vary widely. Verizon prepaid customers are charged 1 cent or 5 cents or 10 cents or 20 cents per message, depending on the plan. AT&T's prepaid customers pay 20 cents a message. Sprint's prepaid customers pay 10 cents per message or have all text message included at no extra charge, depending on the plan. And T-Mobile's prepaid customers pay 5 cents on incoming messages and 10 cents on outgoing messages. And I noted from the LEAP testimony that they do not charge—they have yet different plans for their text messaging.

There is no suspicious coincidence in the timing, Mr. Chairman, for these price changes. The different carriers changed their prices for this product for over a period of almost 2 years, and, indeed, in a competitive market, you would expect there to be some gearing up of competitive prices over time.

The market evidence shows fierce competition across the wireless market. The FCC just this year reiterated that U.S. customers are seeing low prices, new technologies, improved service quality, and choice among providers from all the competition in the wireless marketplace. Using the most recent information available to it, the FCC found that the industry average revenue per minute fell from 47 cents in 1994 to 6 cents in 2007, or a decline of 67 percent, while minutes of use have increased many-fold.

American consumers fare far better than wireless customers across the globe. A recent study found that the average price per minute in the U.S. is lower than the 26 OECD countries, that U.S. customers have the highest minutes of use per month, and that the U.S. has the most competitive market in those 26 countries.

Mr. Chairman, I propose that Americans pay more for wireless usage only in the sense that they have more to buy.

Finally, all this competition has been accompanied by increased customer satisfaction. Consumer Reports magazine for the past several years in a row has given Verizon the highest rating among all the wireless carriers for service quality. During each month in 2008, the rate for complaints from Verizon Wireless' customers has been about eight in every million customers, a rate of only 0.0008 percent.

At the same time, the entire industry is doing better. Last month, the American Consumer Satisfaction Index issued a press release finding that, "Customer satisfaction with wireless telephone service reached a new all-time high for the third consecutive year." Verizon Wireless and the whole industry continue to move in the right direction, Mr. Chairman.

The American wireless industry, I suggest, Mr. Chairman, is and continues to be an American competitive success story. The wireless industry has been blessed by light-handed regulation, and I suggest, Mr. Chairman, that it is in the best interests of the American competitive telecom industry for it to stay that way.

Thank you very much, Mr. Chairman. I look forward to your questions.

[The prepared statement of Mr. Milch appears as a submission for the record.]

Chairman KOHL. Thank you, Mr. Milch.
Mr. Keshav?

**STATEMENT OF SRINIVASAN KESHAV, PROFESSOR AND CANADA RESEARCH CHAIR IN TETHERLESS COMPUTING, SCHOOL OF COMPUTER SCIENCE, UNIVERSITY OF WATERLOO, WATERLOO, ONTARIO, CANADA**

Mr. KESHAV. Good afternoon, Chairman Kohl. My name is Srinivasan Keshav. I am a professor of computer science and a Canada Research Chair at the University of Waterloo in Ontario, Canada. My area of research is computer networking and, more specifically, mobile and wireless networks. I have been studying cellular phone technology for the last 5 years.

I was asked by your office to give my opinion on two questions. First, what is the cost to a carrier to transmit a text message? Second, are the recent price increases for text messages sent by consumers who are not subscribed to a text messaging plan cost-justified?

Based on an analysis that is detailed in the written testimony, my answers are as appears as a submission for the record.

First, I believe that the cost to a carrier to transmit a text message is very unlikely to exceed 0.3 cents.

Second, the price increase is not cost-justified.

Let me justify my conclusions. I will first address the cost of a text message.

To avoid making a loss, the average revenue a carrier makes on a text message must exceed its cost. In their written testimony, representatives from both AT&T and Verizon indicate that the average revenue from a text message is around 1 cent-1.04 cents for Verizon and 1.4 cents for AT&T. Thus, the maximum cost of a text message is around 1 cent. In my written testimony, I have come to the same conclusions using independent evidence.

A second way to estimate the cost of a text message is to cost out each component of the underlying technology. To carry a text message requires many resources, such as the wireless channel, the wired network backbone, billing systems, storage systems, and special control messages. Each of these costs money. In my written testimony, I have estimated the cost of each component. My analysis indicates that the two dominant costs are those for the wireless path and the billing systems. Let me address each in turn.

To estimate the cost of a wireless path, I established that in 1 minute a wireless path can equivalently carry either one voice call or about 80 text messages. The price of a voice call in the United States is about 7 cents a minute, on average. This means that the cost to the wireless for a text message should be 7 cents divided by 80, or about 0.1 cents, roughly-a tenth of a penny.

Estimating the billing cost is difficult. A rule of thumb in the telecom industry is that billing costs for a voice call should be at most the same as the cost to carry the call itself. As a conservative estimate, I, therefore, assume that the cost of billing a text message is twice the cost of actually carrying it. That would make the cost of a text message 0.3 cents.

I should point out that this portion of my analysis makes a strong assumption about billing costs. Nevertheless, I have tried to account for it by being conservative in my assumptions.

To sum up, the cost of a text message is certainly smaller than 1 cent based on testimony from AT&T and Verizon that we just heard. In my opinion, it is likely to be smaller than 0.3 cents based on my analysis of the underlying technology that you can find in the written testimony.

I will now turn my attention to the second question. That is, are the recent price increases cost-justified? I believe that the only possible technical reason to raise the price per message would be if the amount of radio spectrum used by the text messaging traffic was so great as to cause network congestion. In this case, the price increases, also called "congestion pricing"—would dampen demand and reduce load. However, the total worldwide traffic of 3.5 trillion text messages carried in 2008 account for the radio spectrum available to just a few hundred cell phone towers. In my written testimony, I had estimated 28. I was off by a factor of 10. It is exactly 280. However, in 2008 alone, 300,000 such towers were sold. So it is very unlikely that text message traffic is congesting the network and the available spectrum. And, therefore, the price increases cannot be cost-justified.

To sum up, I have tried to answer the questions posed to me to the best of my abilities. My analysis has made use of publicly available data as well as a few clearly stated and conservative assumptions. I would like to thank you for giving me a chance to present my conclusions. I also welcome input from technical experts that will help me refine my analysis and correct any mistakes.

Thank you.

[The prepared statement of Mr. Keshav appears as a submission for the record.]

Senator Kohl. Thank you, Mr. Keshav.

Ms. Itkin.

## STATEMENT OF LAURIE ITKIN, DIRECTOR OF GOVERNMENT AFFAIRS, CRICKET COMMUNICATIONS, INC., SAN DIEGO, CALIFORNIA

Ms. ITKIN. Thank you, Mr. Chairman, for the invitation to testify today. For the record, my name is Laurie Itkin, and I am with Cricket Communications. Cricket has been around for about 10 years, and we have grown to become the seventh largest facilities-based carrier in the United States, and what that means, facilities-based, is that we have invested billions of dollars in building out our own network. We current have over 4 million subscribers in 32 States.

Cricket serves consumers who have been left behind by the larger carriers. Our customers tend to be more ethnically diverse and lower-income than the larger carriers' consumer, and Cricket pioneered the unlimited, flat-rate, all-you-can-eat service with no long-term contract, no credit check, and really most importantly, no early termination fee. Our customers talk and text much more than the industry average, and I think that is what happened when you offer all-you-can-eat pricing.

For an example, our $40 plan includes unlimited local and long-distance calling and unlimited incoming and outgoing text messages. And I also really want to state that I believe that Cricket puts pricing pressure on carriers in every market we enter. And I am pleased to announce that next week Cricket will be launching service in D.C. and Baltimore.

The subject of this hearing is text messaging, and I think we can all relate to the story of hearing a parent's shock as she opens up her wireless phone bill to see a $600 charge when her adolescent child has discovered text messaging for the first time and goes into a frenzy.

We also have heard of consumers that are concerned that they are receiving unsolicited text messages, which is called "spam," and they are actually being forced to pay for an unsolicited text message that they did not want.

These situations would never happen with Cricket. Since its inception, Cricket has never charged its consumers a penny to receive an incoming text messaging.

Cricket believes the best regulator of prices is a competitive marketplace, but despite our rapid growth and, Mr. Chairman, as you stated in your opening comments, we are still a very small carrier in comparison to the four largest carriers who control 90 percent of the market.

So the question is: How do we create a robust, competitive environment nationwide so all consumers can benefit from innovation of new entrants like Cricket? What is preventing that dynamic from occurring?

Well, we think there are two policy issues that need to be addressed, and they are spectrum constraints and roaming policy.

First of all, we need more spectrum. The wireless industry needs more spectrum, and I think every panelist here today will agree on that point. The problem is that the two carriers sitting to my right have won the lion's share of spectrum in FCC auctions over the last few years, and they have also gobbled up smaller competitors.

Mr. Chairman, Cricket shares the concerns that you articulated in your September 2008 letter to the CEOs of the four largest carriers, and you stated that you were concerned regarding "consolidation and increased market power by the major carriers." So Cricket's concern with market power is that it gives carriers the ability to engage in anticompetitive practices such as we are facing with roaming.

No wireless carrier has ubiquitous coverage. We all have to use each other's networks to provide seamless coverage to consumers. Cricket's experience is that the rates that carriers charge for roaming minutes is directly correlated to their size and market power.

One particularly anticompetitive practice that Cricket faces in many areas of the country is that one large carrier prohibits Cricket customers from roaming at all. With all the consolidation, such as Alltel being purchased by Verizon, Cricket has fewer and fewer roaming partners available. In many cases, our customers are stranded without service and cannot use their phone at all.

Now, I ask you: How can that be allowed to happen when service is available?

So I will close by saying that there are currently three proceedings roaming pending at the FCC, and I would be happy to go into more detail in the Q&A. Cricket believes spectrum and roaming policies are the foundations for national competition. All consumers, regardless of where they live, work, and travel, should have access to affordable and innovative options for service, such as the value-rich services that Cricket provides.

Thank you, Mr. Chairman. I will be happy to answer questions later.

[The prepared statement of Ms. Itkin appears as a submission for the record.]

Chairman KOHL. Thank you very much, Ms. Itkin.

Mr. Kelsey.

**STATEMENT OF JOEL KELSEY, POLICY ANALYST, CONSUMERS UNION, NEW YORK, NEW YORK**

Mr. KELSEY. Chairman Kohl, thank you for the opportunity to testify before you on behalf of Consumers Union. In my testimony, I plan to cover four areas: First, I would like to give the consumer perspective on text messaging. I will then talk briefly about the consolidated market structure in which we see this behavior occurring. Third, I would like to cover briefly some other limitations that we see consumers face in this marketplace. And, last, I will offer a few solutions that we believe will help introduce more competition into the marketplace and ultimately lower consumer prices.

Since 2005, every major carrier has at least doubled its price for text messaging from 10 cents to 20 cents per message. However, this is a head-scratcher to consumers because these rising costs are not at all related to the price incurred by the carrier.

Text message files are very small, and the price of their transmission is negligible for the provider, as we have heard. To put this in perspective, consider that it would take 600 text messages to equal 1 minute of voice. At 20 cents per text, that is the $120 data equivalent of a 1-minute phone call. Rather than a true reflection of the cost of service, we believe the purpose of high individual text messaging is to herd or price consumers into large monthly plans with more minutes or texts than a consumer will need or use. And if they go over that allotted number of texts, they are back to paying 20 cents to send and receive. No matter what the cost, these monthly plans are protection money that consumers pay so they do not have to face sky-high text message rates.

This is not the bellwether of a competitive market; rather, to us this represents parallel behavior among four national providers that seems to indicate inadequate competitive pressures in the wireless world.

These price increases are occurring against the backdrop of a consolidating market structure. Collectively, as we have heard, the four national carriers represent just over 90 percent of the subscriber based, and the two largest represent over 65 percent. Additionally, the two largest providers—AT&T and Verizon—have been able to capture much of the spectrum in this country, the air waves that make communications wirelessly possible. These spectrum holdings, combined with their ownership of the wire line infrastructure allow the two top providers to control the on ramps to the

Internet. They use this control to set high barriers to entry and charge their competitors exorbitant special access fees in order to offer mobile Internet services. Consumers are paying the price.

As we have heard, U.S. mobile phone subscribers pay more annually than customers overall and most other developed nations. The $506-a-year figure that you mentioned in your opening statement can be compared to the United Kingdom at $374 or consumers in Spain at $293.

Within this consolidated context, we continue to see questionable behavior that is locking consumers in and locking competitors out. Here are three examples.

First, consumers face limited access to cell phones because carriers demand that cell phone makers sign exclusive contracts. This precludes them from offering their phone on any other network. This has the multiplied effect of not only limiting consumer choices, but it also raises a barrier to entry for smaller competitors that cannot get their hands on the kinds of phones that consumers demand.

Yesterday, Senators Kerry, Wicker, Dorgan, and Klobuchar sent a letter to the FCC addressing this, and we commend them for doing so.

Second, after signing lengthy contracts for bundled service, if a consumer is dissatisfied with their service, they cannot easily switch providers. They face high early termination fees that are punitive in nature, and if the phone they bought is locked to that particular carrier, when they switch they end up with an expensive brick in their hand rather than a cell phone.

Third, customers face prices for their data plans that, just like text messaging, seem far removed from any possible cost, indicating a stark absence of provider rivalry over data pricing. I provided several examples in my written testimony of consumers that signed up for monthly service for their data plan and ended up with a bill that was several thousand dollars more than they expected. And even when they do pay for their data services, consumers are not getting the full experience of the Internet; rather, they are being served up the "Internet Lite" because wireless providers and cell phone makers are blocking popular software applications like Skype from being accessible to consumers.

So what are the solutions? As more Americans are cutting the cord and switching from wired to wireless services, as you noted in your opening statement, increasing costs are reaching deeper and deeper into the pocketbook of Americans. More oversight is needed. This hearing, and many others like it, is an excellent start. However, formal inquiries and investigations have continued to determine whether Government intervention is necessary.

For example, the GAO could look at the barriers consumers face when they want to switch service and what overall impact that has on the market force of consumer demand. And, last, regulators, like the FCC, should take up several different efforts, for example: one, opening a rulemaking on handset exclusivity; two, fixing the in-market exception for voice roaming that we heard Ms. Itkin speak of; and, last, begin a rulemaking on data roaming.

Thank you. With that I will end, and I look forward to any questions you have.

[The prepared statement of Mr. Kelsey appears as a submission for the record.]

Chairman KOHL. Thank you very much, Mr. Kelsey.

For both Mr. Milch and Mr. Watts, both Verizon and AT&T have defended their text messaging price increases on the grounds that both companies made independent decisions in response to market conditions. Yet neither of your companies has made any effort to undercut your competitors on price. A brief review of the history of these price increases makes this very clear.

Why didn't either AT&T or Verizon resist these per message price increases or at least raise your price increase by less than the other one in order to undercut your competition, which is what we always do in a marketplace and try and gain market share? This is the way businesses normally compete, particularly when you offer fairly identical services. So why did you each go up by the same amount? Why didn't you go up less than your competitor and get some business by so doing? Mr. Watts?

Mr. WATTS. There are a number of factors to your question, but let me first point out that there was not a coincidence in time in the price changes, and while you constantly hear the suggestion that these occurred simultaneously, it simply is not the case.

Most importantly, in looking at how the wireless world operates from the competitive standpoint, there are many, many places where each carrier hangs its hat to differentiate itself from its competitors. Ms. Itkin, for example, pointed out that her company has all-you-can-eat plans, and that is a perfectly fine plan for them. They have made a business decision with which they are comfortable to try and grow their business.

We have looked at a variety of places where we have chosen to compete. We want to make sure a couple of things: One, there is not a plan out there where we do not have a competitive price. And on a pay-per-usage plan, where you are paying a price per message, we have a competitive price. It is a price that is not undercut by our competitor.

We have focused our attention in many cases on places that really move the needle. As I said, less than 1 percent of the text messages are sent by customers on a per message pricing basis.

We have focused on our attention on the other 99 percent where we have made enormous strides to lower the prices and compete very aggressively both on the voice side, the text side, the message side, the video side, the phone side. You go on and on and on. And that is where we have focused our efforts to differentiate ourselves in this particular wireless market.

Chairman KOHL. Mr. Milch?

Mr. MILCH. Mr. Chairman, from our point of view, the decision that a customer makes to go with Verizon or AT&T or T-Mobile or LEAP is a complex one. It involves quite a few variables. It does not just involve the price for pay-as-you-go text service. So you are talking about issues that range from what kind of phone that you have, what are the various voice plans, what are the data plans, what kind of apps can you get on the phone.

It seemed to us, Mr. Chairman, that the issue of whether we would be able to undercut AT&T or T-Mobile or Sprint or anyone

else on the pay-per-text part of our service and thereby attract customers away from one of our competitors is very doubtful.

So competing on a series of price issues and a series of differentiated service issues, phone issues, plan issues, is very alive and well. You just need to go into any store, look on the Internet, and see all the different kinds of plans as the various carriers try to compete with one another. But focusing on this part of the market, this less than 1 percent, or 1 percent of all the text messages that are at issue and believing that this is going to drive the competitive needle, that was not our marketing judgment, Mr. Chairman.

So if we were to cut the price, we do not think we would attract anybody to our market, because if they are a heavy text user, they are not paying 20 cents a text. They are in a plan, they are paying a penny a text. If they are a light text user, why would they change carriers based upon the pay-as-you-go text price?

So, Mr. Chairman, we do not believe as a marketing matter or as a competitive matter that this is a focus where we can draw customers away from our competitors.

Chairman KOHL. But look, guys, back in October of 2006, Sprint raised the per message text price from 10 to 15 cents. Within months, both Verizon and AT&T also raised their price by that amount.

Then in October of 2007, Sprint again raised the per message text price, this time from 15 to 20 cents. That was in October of 2007. And by March of 2008, both Verizon and AT&T once again matched this price increase within only weeks of each other.

Now, you say it really had nothing to do with people either subscribing to your service or not subscribing to your service. Ms. Itkin, Cricket does not charge anything. Do you think that is a competitive enticement to customers?

Ms. ITKIN. Thank you for the question, Mr. Chairman. Yes, Cricket has pricing plans whereby, as I mentioned in the testimony, incoming messages are—there is never a charge to receive them, and starting in very low-price plans, you receive unlimited text messaging. And, sure, we find that we have had opportunities to be innovative in our pricing, and I think in today's economy that is very important for consumers to have an affordable option.

Chairman KOHL. Well, now, you do not think she is right, that price—she says price is an issue. And you are saying whether you charge 10 cents, 5 cents, 15 cents, or 20 cents for a text message, the individual one, is not a big issue.

Mr. WATTS. For our customers——

Chairman KOHL. That is what you are saying. And it is pretty hard to believe, because if it is not a big issue, what are you in business for? Price is a part of your whole business. It is a part of how you get customers and keep customers.

If they had not gone up to 20 cents, you would not have gone up to 20 cents. Had they gone down from 10 cents to 5 cents, perhaps you would have done that—if nothing else, not to get, you know, beat out on something. That is the way business is. And what we are suggesting to you is a clear indication, at least on the surface here, that when one went up, the next one went up. And, you know, whether or not that was done after consultation or before

consultation, it clearly is not to be doubted to any extent whatsoever.

Mr. WATTS. I am sorry. Was there a question there that you would like for me to address? I would be happy to try to address that.

If I might, there is implicit in this entire conversation that if two competitors charge the same price for something, they must not be being competitive, and there are a number of faults with that. Set aside—there is case law after case law that says you cannot draw that conclusion from parallel pricing. The United States Supreme Court has made that clear. Economists would say that does not indicate anything.

But the real-world economy does not indicate that either. You can find businesses after businesses, particularly when you have businesses like ours, the wireless carriers who offer a broad range of services, features, capabilities, where if you go into our pricing sheets, you will find hundreds of examples where the prices we charge are markedly different from each other. Will you find an example where the price may be the same? Yes, of course you will. But, you know, you will find that in every single business out there.

We just happened to do a few little quick checks this afternoon of places you can find the common price. Home Depot charges the same price for a particular barbecue grill that Lowe's does. They charge $960 each for a barbecue grill. Does that indicate they have conspired somehow or they are not competing. Of course not. They have thousands of other products and services that they offer. They compete on another price. For some reason—I cannot tell you why—they chose on that particular component to charge that price. It does not mean anything other than that.

You can find the same example where Foot Locker and Champs Sports charge the same price for a basketball. You say, "Big deal. It is a basketball." But it is one thing they offer out of thousands of products and services. Does the fact that they charge the same price for that basketball mean they do not compete on other things? Of course not. And that is exactly what we have here.

We have an example that has been pulled out of hundreds if not thousands of different prices, products, services, and you say, "Gee, that is the same price charged here. There must be something wrong."

But we have to come back to who is using that, and less than 1 percent of our text messages are at this price, and businesses are simply not going to spend enormous resources in a highly competitive environment like we have today in an area where there is such a small amount of usage. We focus our attention on many other things to differentiate ourselves. And that is what has happened here. It is nothing more.

Chairman KOHL. What is the percentage of your customers that use the individual text message, not the percentage of the total volume but the percentage of your customers? It is more than 1 percent, isn't it?

Mr. WATTS. Would you like to try that?

Chairman KOHL. Mr. Milch?

Mr. MILCH. Certainly, Mr. Watts. For Verizon, yes, it is, Mr. Chairman. It is more than 1 percent. About 26 percent of our customers do not use any text messages at all. So we do not put together something where they are paying for text messages in some sort of a bundle or plan if they do not want to use text messages. So they do not need a bundled price or text bundled into their cost.

Of the remaining, of the 74 percent who do text, about 17 percent total—I do not want to give you the wrong numbers here. It is 17 percent of all of our consumers, a little over 20-odd percent of the 74 percent—do incidental texting and pay on a pay-as-you-go basis.

Chairman KOHL. Thank you.

Mr. WATTS. And our numbers are comparable to Mr. Milch's.

Chairman KOHL. Yes, that is what I thought.

I would like to call now on the Ranking Member of this Committee, Senator Orrin Hatch.

Senator HATCH. Thank you, Mr. Chairman. I welcome all of you to the company, and this is an interesting subject to me. I am sorry I am late, but I have been so involved in the health care matters that I have to run back and forth between committees to do it, also Intelligence.

Mr. Kelsey, if the accusation that cellular companies have undue market power is true, why then do we see higher prices in only one extremely small sector of the texting business? Now, customers who pay for each specific text message, called pay-for-use, or PPU—you have already brought this out, I am sure—make up less than 2 percent of the texting volume for many cellular providers.

Now, is there really that much profit to be made in that subsection of the market as compared to the market as a whole?

Mr. KELSEY. Well, I think it is important to note that, yes, this is one example, but this is one example that is similar to other individuals services that wireless providers offer—for example, data plans and also voice plans—and pricing those individual services high is a way to herd consumers into the monthly plans that may result in more minutes than a consumer will use or need.

Alternatively, they may buy a 200-texts-a-month plan, and then once they pass that limit, or they have a teenage daughter or son that passes that limit, they are then paying 20 cents—they are back to paying 20 cents to send and receive a text message.

So for us, you know, we are not alluding to any collusion here, but we are saying that people do not need to sit in a room and come up with a plan from the consumer perspective to see the same harm exist in the marketplace.

The point is that when individual text messaging now, consumers are being charged the maximum amount that they are willing to pay rather than the lowest cost that a carrier can provide it for.

Senator HATCH. Let me go to Mr. Watts and Mr. Milch. What would be your respective companies' profit margin for the PPU market? And what percentage of your texting process comes—or profit, excuse me, comes from the PPU business? Do you want to start first, Mr. Watts?

Mr. WATTS. I do not have the exact number for that. I can tell you that because—you could assume that because 99 percent of our text messages are on the rate plans, that certainly a substantial

portion of our profits and revenues come from that same percentage of usage.

I cannot break this down by a particular unit like that because our networks are not constructed to provide a particular service, pay-per-use versus bundled. I simply cannot break it down that way. So, unfortunately, I do not have that statistic for you, Senator.

Senator HATCH. Okay. Mr. Milch.

Mr. MILCH. Ranking Member Hatch, the only statistics I have for you is the one that I recall was at our—and it is not precise—is that the percent of revenue that Verizon Wireless gets from the pay-per-use category of customers is absolutely minuscule. It is in the similar percentage rate as the percentage of customers that use the plan. So it is a very, very small percentage of our revenues.

I do not have the profit margin broken out the same as Mr. Watts does.

Senator HATCH. Well, Mr. Keshav, are their statements consistent with—their statements on profit margin, are they consistent with your sly?

Mr. KESHAV. Sir, they did not reply to your question of the profit margin. My analysis indicates that if a text message is priced at 20 cents, the cost of carrying that is roughly one-third of 1 cent, so the profit margin is approximately 19.7 cents on the 20 cents.

Senator HATCH. Mr. Watts, PPU prices are going up. How can you argue that AT&T is not exerting undue market power in the PPU market if prices continue to rise and your companies are charging comparably higher rates?

Mr. WATTS. When you say market power, that suggests that one company can dictate a price in the marketplace, and we simply do not have that ability in such a highly competitive environment. Most importantly, what you can see is that AT&T competes with all the wireless carriers across a very broad spectrum of products and services, and we have different prices, different offerings. We differentiate ourselves in a variety of different ways. And in this case, with pay-per-use text messaging, it is an area where we have not chosen to focus our attention to differentiate ourselves, but we are charging a rate that is a competitive price, because there is no one in the market that has a significantly lower price with the exception of companies such as Cricket, and they have a different marketing effort. That is great for them. That is a perfectly fine business decision for them to make. But we have simply chosen to focus our attention in other areas.

Senator HATCH. Mr. Milch, I understand that you have stated that Verizon is attempting to steer its customers toward bundled plans. Now, could one do this in a truly competitive market devoid of undue market power? That is a question that I think needs to be asked, if it has not already been asked.

Mr. MILCH. It has not been, Senator Hatch. Of course, we believe we can do this. We believe, as Mr. Watts stated earlier, that customers in bundled plans are far more satisfied. They have far more predictable bills every month, and it is very important for them. It reduces our costs because we have lower customer service complaints, and we have much more satisfied customers.

The question of whether we can offer our customers a bundle with significantly lower prices and give them the opportunity, if they do not want to use very many messages to pay as they go, or to opt into a bundle, it seems to me that this is perfectly consistent with a competitive market. There is no aspect to offering a series of choices within our own plans, looking at the plans of our competitors, that suggests that there is any market power in the texting market overall, let alone as pay-as-you-go market, which I am not quite sure is a separate market that has to be considered for whether there is undue power in it.

This is a very broad market. There are billions and billions of text messages. As everyone has pointed out, this is a market where output has skyrocketed and average prices have declined. Those are not the markers of a non-competitive market. To the contrary, those are the markers of a competitive market where output goes up and prices decline.

Senator HATCH. Mr. Kelsey, what is wrong with Verizon steering people, their customers, to bundled plans? I understand these type of plans are very popular and that they seem to have and offer better value.

Mr. KELSEY. Well, from a consumer perspective, I think it is not—it is important not to confuse growth with competition. What is wrong is that Americans overall pay more than consumers in many other developed nations.

You know, I would suggest that one of the reasons it is doubtful that pricing individual text messages lower as any way to get competitors from one or the other four national providers to switch is because once they are lured into that bundle, once they are lured into that contract, they face very high switching costs through early termination fees, which we believe are punitive in nature, and the fact that their handsets are many times linked or limited to the particular carrier that they are in a plan with. So it is very hard for consumers many times to vote with their feet when they are kind of shepherded into one of those longer-term contracts.

Senator HATCH. Along a different line, Mr. Kelsey, handsets and the information they transmit and receive are becoming increasingly complex. More than ever, proper integration is vital to the successful launch of new cellular projects and features.

For example, I understand that visual e-mail requires significant integration work between the headset manufacturer and the wireless provider. Therefore, are not exclusivity agreements in the long term in the best interests of customers?

Mr. KELSEY. No, I do not think so. I think that if they were ever justified, it might have been very early on when the wireless marketplace was still an infant marketplace. Certainly now you see 87 percent of Americans have cell phone plans, and in a market where there is sufficient demands, we do not believe that exclusivity is necessary to boost innovation. Rather, I think handset exclusivity is more of a finance question. It is one of many ways to finance research and development. If you look at other markets like Asia and Europe, where close to 85 or 90 percent of the handsets are sold apart from the wireless carriers, it certainly, I think, offers a window into a different world that is kind of possible in this wireless marketplace. Also, if you look at other markets here in the United

States, for example, handset exclusivity does not necessarily—if you look at other markets, for example, like computers and the Internet, your Dell does not exclusively work with Comcast or Apple does not exclusively work on Time Warner, for example. So I think there are plenty of other places where the device itself is divorced from the carrier, and that represents a boon to consumers because it is more choice, and also it provides lower costs.

Mr. WATTS. Senator Hatch, I apologize, but may I have a moment to respond to Mr. Kelsey's comments? I have to say, candidly, he could not be more wrong. There are so many reasons why handset prices are what they are in the United States today. And while we hear examples of other countries where you have phones that are untethered, what is left out of that debate is the effect on prices of the phones, the effect on the innovation that is engendered by those exclusive arrangements.

First, prices of phones in the United States are cheaper than anywhere in the world, and they are cheaper for a very simple reason: because carriers have a tendency to subsidize those prices. They subsidize those prices because they have exclusive arrangements with vendors or they have the ability to incur—or drive down the cost of the phones that they buy. We have, obviously, one of the more popular phones in the arena today, and that is great for the American public.

Recently, it was announced that Apple would charge $99 for an iPhone. That could not happen if that price was not subsidized by AT&T. We would not be inclined to subsidize that price if we did not have the ability to recoup the cost of that subsidy. That carries throughout the market.

Other companies have exclusive arrangements where they have done exactly the same thing, and what that has done is hugely, hugely benefited the American public because they pay less for phones.

On the innovation front, nobody had an idea about touch-screen technology and all the things the iPhone did until it came out and until it was successful. And what has happened in response to that? Competition, competition, competition. Every phone manufacturer is spending enormous amounts of money to create the iPhone killer. If you go to the Internet and put in the phrase "iPhone Killer," you will find millions and millions of hits for all the stories that have been written about people trying to respond. That is the essence of competition in this country.

Senator HATCH. Well, thank you. I have a question for you, Ms. Itkin, and we will submit it in writing because I have taken more time than I should. And I know Senator Klobuchar has a limited time, so I will finish with that.

Chairman KOHL. Thank you, Senator Hatch.

Senator Klobuchar?

Senator KLOBUCHAR. Thank you very much. Thank you, Mr. Chairman, for holding this hearing. I am running back and forth as well to the Julius Genachowski confirmation hearing for the FCC, which is relevant here. Maybe I will ask some of the same questions there.

But I will say that my focus in this area has been on the second part of the hearing that the Chairman has set up, and that is just

the competition of the cell phone industry in general. And my impression has been that this industry started out with little regulation, understandably. It was back in the days when the movie "Wall Street" was out and Gordon Gecko had a huge cell phone the size of a briefcase, and we have now gotten to a point in this country that there are more than 270 million wireless subscribers. Almost 18 percent of American households have only a wireless phones. Americans are using mobile Internet capabilities as never before. And as we have talked about, they are sending text messages at an amazingly high rate, more than a trillion messages last year.

As we speak, I am sure about 50 of my colleagues have sent some kind of a text message.

In the past few years, we have also seen this unprecedented consolidation in the wireless sector, and while this was occurring, as has been discussed already, we saw some dramatic increases in the prices of individual text messages.

We also have other concerns, and I want to talk about that. I introduced a bill last year called the "Cell Phone Consumer Empowerment Act" with a number of my Commerce colleagues. And I am sure we are going to be reintroducing something like that.

I have appreciated some of the changes that have been made, especially with the early termination fees. When we launched that bill, there was not much work done on that, and now there have been some dramatic changes with the early termination fees.

Also, that bill focuses on automatic contract extensions and the lack of information about service coverage, and that is where I want to start today. Still having spent the weekend driving around my State on major roads, I can still tell you that in rural parts of our country—and Minnesota is not what my friend Senator Begich calls "extreme rural," but there are rural parts, and these are major interstate highways where the cell phone coverage still goes bad. It is very frustrating for people in my State, and especially when they think they are getting a cell phone coverage that covers a certain area. And I think this hurts competition, if you want to talk about the competition generally, that people do not have full information.

My feeling is that they do not have full information when they buy a cell phone of where the drop calls are and what the problems are, and that is why we want to get a handle on that with this bill. And I would like you to comment, whoever wants to, on this area about the rural phone service and the lack of phone service and how we have issues despite all this growth in the market with competition to serve these areas. Ms. Itkin.

Ms. ITKIN. Mr. Chairman, Senator Klobuchar, thank you for the question. I really think Cricket is an example of what can happen and what kind of services can be provided to consumers when we are allowed to compete. We do a lot of the things already today that you are trying to address in your legislation. Talk about disclosure, we want simplicity and predictability for our customers. They do not get surprise charges. They know what their monthly bill is going to be month after month. And since we do not have an early termination fee and we do not subsidize our handsets—we are one of the carriers that does not—we have to earn our cus-

tomers month after month after month. They can leave, port their number, and go to a competitor.

So it is very important because we are offering some of the most affordable rates and some of the most value-rich services today that Congress and the FCC ensure that some of the industry issues are there to promote competition today and into the future. And I have discussed some of those in my opening statement about the constraints on spectrum for small and mid-size carriers as well as the roaming loopholes that are here today that need to be filled.

Again, finally, if these issues, I think, are addressed, you are going to see more competition, and I think that if——

Senator KLOBUCHAR. So your argument would be you fix some of these roaming loopholes, and you would be able to better offer service in the rural areas?

Ms. ITKIN. Absolutely, because then we will be able to provide seamless coverage for consumers and provide head-to-head competition every day to the Big Four.

Senator KLOBUCHAR. What we tend to do is take three different cell phones out with us because one will maybe work in a certain area, which is the problem, which is why I do not see this great competition in so many parts of our State.

Mr. Kelsey.

Mr. KELSEY. Sure. Thank you for the question. So there is some good news, I think, and you alluded to that earlier. You know, we have seen services—for the very first time, Consumer Reports this year reported that service itself has increased and consumer satisfaction is increasing.

Senator KLOBUCHAR. Right.

Mr. KELSEY. At the same time, prices are going up and that is the new top concerns that consumers have. Prices are going up, and there are fewer market providers than ever before.

So I think it is important to look at that and to also look at the barriers to entry that stop some of the smaller competitors from becoming bigger and going out to provide service to the few places that still do not have it in America, not only for voice is that—for voice we see that with the in-market exception for voice roaming and also data roaming. But on the data question, in particular, which I think is extremely important, because data is the service that will drive wireless communications for the next 10 years, we see special access fees, which are the on ramps to the Internet, getting charged at, in our view, discriminatory rates on their competitors, and handset exclusives I would like to go back to, which really stop consumers from being able to choose a more rural or smaller provider because they do not necessarily have the phones that consumers want. And if a rural provider or a smaller provider cannot get those handsets, they cannot attract the customers that will buy the data service, and they cannot invest in their data infrastructure. And that is a big problem.

Senator KLOBUCHAR. And what do you think about this argument—you know, Senators Kerry, Wicker, Dorgan, and I just sent a letter to the FCC asking them to expedite their consideration of the handset exclusivity relationship. What do you see as this argument that was made by Mr. Watts, Mr. Milch—Mr. Watts especially—about this innovation, a response to that, the innovation

that he says AT&T has been able to develop or that Apple has been able to develop because of the exclusivity relationship?

Mr. KELSEY. Well, thank you for the letter, by the way. I think, you know, we very much support that action, and I had mentioned it in my spoken testimony.

On innovation, you know, I think it is really important to note that it is not the wireless provider that is the innovator here. It is the device manufacturer that is the innovator. And we have seen devices where services have been crippled as they have come over or they have been developed in the United States marketplace. There is evidence of phone manufacturers coming out and saying, you know: Look, we had call timers that we wanted to offer consumers, but we have been told we should not roll those out. We have had GPS that we wanted to offer for free to consumers, but we were told we cannot role that out until the carriers figure out a way to ask consumers to pay for it.

This week, we are going to see the iPhone 3GS, and some of the options available there with tethering and with higher speed services are available in Europe, but they are not yet available here in the United States.

You know, I really do believe that innovation is—I really do believe that handset exclusivity is just one way to finance research and development. It is a finance question. It is not a necessary question, especially if you have a marketplace where there is lots of demand and consumers are clamoring for different types of phones. More options should be available at lower prices.

Senator KLOBUCHAR. Now, Mr. Milch, Verizon has announced that it is going to reduce the exclusive period it has over at least two of your phones—is that right?—to 6 months, so you are going to reduce that. Am I correct?

Mr. MILCH. Yes, Senator, we offered to the rural carriers that we would, for our LG and Samsung handsets, be willing to reduce the exclusive period to 6 months.

Senator KLOBUCHAR. And why those models? Why those phones?

Mr. MILCH. Those are our most popular models and phones, and that is why—they are the largest grouping. That is why.

Senator KLOBUCHAR. And so what do you think is the average life span of one of these phones in today's market until you can sort of give up the exclusivity arrangement?

Mr. MILCH. You know, I am not sure. I think that many of these phones go through major, major series of iterations, and many of them have been on the market for quite some time.

I would also note that I think that the notion that all of a sudden getting rid of handset exclusives as a mandatory aspect, as Government intervention to outlaw certain types of contractual arrangement, with respect, I do not believe it is going to have any effect on the issues that Mr. Kelsey is speaking about. It is not going to put a single handset, getting rid of those exclusives, into the hands of another carrier. That carrier has to work with the device manufacturer to make sure that it works on their network.

There is mutual development that goes on, and a great deal of mutual development. With all due respect to Mr. Kelsey, he does not know what he is talking about when he simply says that it is only the device manufacturer that innovates. It is a cooperative

venture that results in innovation, and so if someone wanted the Verizon experience with a certain phone, I can tell you if they went to a different carrier, they would not get it because that Verizon——

Senator KLOBUCHAR. And how do you respond to what is happening in Europe?

Mr. MILCH. Well, I respond to what is happening in Europe—I do not know which aspect of it. My view is that Europe has a paucity of handsets compared to the United States. For instance, we talked about the prices in the U.K. or what is available in the U.K. They have about 150 handsets in the U.K. We have over 630 different handsets available in the United States, and that is directly related to the innovation that is going on here. And I think that any view that there may be a different way to fund innovation is simply ahistorical. We have the evidence before us. We have years of innovation in handsets that has come about from a system where there are contracts between providers and device manufacturers that involve some period of exclusivity. It is the same theory that underlies the patent system in the United States, and it rewards innovation by providing a period of exclusive dealing.

Senator KLOBUCHAR. But yet with some of these handsets—which is good, you are reducing that exclusivity period to a shorter period of time. And I think one of the things, as we saw with early termination fees, gradually sometimes the marketplace evolves. And arguments that can be made early on may be changed as the technology develops and there is more innovation out there and a focus then focuses on price, more of a focus on price and allowing consumers to get things at a better price.

My concern here is more that for so many of my constituents now, this is becoming their only phone, and so they are very price-sensitive in a very difficult economic time. And they get locked into these contracts. So then we have to look at the early termination fees, like we did before, and they do not—they try to buy the best phone for their service area, and then they figured out that what they read did not really cover that service area.

So that is all we are trying to do here, is get more competition in some of these areas—what I am trying to do—so that they actually get service. I am here talking about areas that tend to have more drop call service. Maybe they have some service, but then you go one block out of town, and they do not have service.

Mr. Watts.

Mr. WATTS. I appreciate you giving me an opportunity to address that particular issue. My company, AT&T, I believe is particularly committed to the rural markets, and we have demonstrated that commitment in a number of ways. We have demonstrated it with our dollars and cents. In the last few years, we have had a number of transactions where we have tried to go out and acquire additional spectrum network assets. That includes Dobson Wireless, which we acquired about 2 years ago; Centennial Wireless, which we have a pending contract to acquire; and we have recently entered into a contract to buy a number of assets from Verizon that they have to divest as a result of their acquisition of Alltel.

One of the most common attributes of each of those three transactions I just described is the geographic area they serve would

generally be described as rural. And we have taken that step and gone out and committed to spend billions of dollars to get into those markets so we can bring advanced features and capabilities to the very types of areas that you are talking about and you are focused on.

So we have a very significant commitment to that, and it is not just words. I can point to those dollars and cents that we spent there.

In addition, we are spending this year, AT&T's capital budget—and it is not just for wireless. Our capital budget as a whole is going to be between $17 and $18 billion in 2009. That is an enormous number. There are very few companies in this country or in this world who are making that kind of investment in this environment.

There is another key factor I want to point out. When we make that investment, the work that is done on our networks is done by the largest unionized full-time workforce in America today. So we are not only investing in America, we are not only investing in rural America; we are creating and maintaining good, solid, high-paying positions, unionized workforce. We are the only wireless company that has any significant or any unionized workforce at all.

So you put all that together, and the very concerns that you have expressed I believe we are addressing head on, and I appreciate you giving me the chance to point that out.

Senator KLOBUCHAR. Okay. Thank you very much. But I will bring you to Staples in a few of our other towns and see if the phones work. We still have some challenges. I appreciate that and look forward to working with you as we look at reintroducing this legislation.

Thank you.

Chairman KOHL. Thank you very much, Senator Klobuchar.

Mr. Milch and Mr. Watts, a single text message is limited, as you know, to 160 characters and does not cost very much at all for your cell phone networks to carry this information. Was the doubling of text message prices on a per message basis between 2006 and 2008 in any way justified by increases in your cost?

Mr. MILCH. I will go first. Mr. Chairman, we are a multi-product firm. Every multi-product firm has to recover all of its costs across its various products. There is no reason in a competitive market to believe that in any one particular point in time—at least as I understand the economics, Mr. Chairman—that prices are going to come to cost. We do not base our text message prices on our cost in that sense. We certainly are mindful of our cost, but with respect to Professor Keshav's analysis or the analysis that it does not cost very much for our network to do it, to carry a text message, I think there are two important points.

The first important point is that looking at the long-run incremental cost or some sort of cost that looks at the cost for putting the next text message on the network ignores the fact that you had to have the network in the first place. We had to make huge investments in spectrum, huge investments in computers and switching, in order to be able to carry even the first text message. And so those text messages have to carry all those shared and common

costs along with every other service we have. That is the first issue.

The second issue is, as I noted, I believe, quite frankly, Senator, that the question of cost is not relevant to this issue. We are not sitting here in a regulated industry, nor should we be, where the question is: What is your cost for that product? That is not the way that prices are set in a competitive industry.

And so I believe, Chairman Kohl, that the cost issue is interesting but not relevant to the question of what our prices are.

Chairman KOHL. Do you want to say something, Mr. Watts.

Mr. WATTS. If you do not mind, Mr. Chairman. I do want to point out that implicit in your question was an acceptance of some of the testimony that you have heard today that the increase in the quantity or the volume of text messages has not resulted in an increase in cost to a carrier. And with all due respect to Dr. Keshav, the network that he describes that can increase simultaneously the capacity to handle trillions of minutes of voice traffic and simultaneously handle billions, if not trillions, of text messages, and to suggest that that network exists that can do that without additional cost would be to describe a network that would be magical in its proportions. But it does not exist. That network is a myth.

There are enormous costs incurred in building these networks. Mr. Milch went through some of those, and it goes on and on, from the spectrum to the carriers to the networks. And, most importantly, while you have heard that all of the text messages could be carried on only 280 cell sites in the world, that would be great if the entire world lived around 280 cell sites. But they do not. They live around all the world which takes, as Mr. Keshav said, 300,000 cell sites were built in the period of time he mentioned in his testimony. Why? Because that capacity had to be created. And to create that capacity you incur costs.

So his fundamental premise is simply flawed, and I appreciate the opportunity to respond.

Chairman KOHL. I appreciate that. You know, one of the purposes of this hearing today is hopefully to come up with more vigorous competition in the industry. And you can understand how we want to do that because we are here to protect consumers. We are not here to try and be destructive to you, but we are here to try and protect consumers. And we always assume that when you have a sufficient level of competition, that results in better deals for consumers. And I am sure you could understand our premise and why we are here today in that regard.

Again, Mr. Milch and Mr. Watts, as you know, a consumer is charged both to send and also to receive a text message. And once a text message is sent to a consumer's phone, they are charged 20 cents, or whatever the plan is, regardless. So they have no way to decline a message.

Do you have the technology to allow them to decline a message? And if you do, shouldn't they be allowed to decline a message and thereby save the cost?

Mr. WATTS. Well, let me go first because my answer is going to be short. I do not know. I very much hate to have to say that to you, Mr. Chairman, but I simply do not know the answer to that

question. We will certainly try and find out, and we will get back to you.

Chairman KOHL. Mr. Milch, you must know.

Mr. MILCH. Mr. Chairman, I wish I did. We do have the ability to provide our customers with the ability to receive no text messages. They can go on and, as a matter of customer care, elect to lock their handset out of receiving text messages entirely.

On a message-by-message basis, Mr. Chairman, I do not know.

Chairman KOHL. Mr. Keshav.

Mr. KESHAV. I believe that the existing text messaging standard does not have a message which could be sent by the consumer to say "decline." That is not in the standard today, as I know it. That would be GSM standard 34, I believe. But you could always have some kind of billing system which would take care of it. It will complicate matters enormously. I do not think that would be a way I would want to go. As an engineer, I would not go there. That is my answer.

Chairman KOHL. All right. Mr. Milch and Mr. Watts, wasn't a major motive for these price increases in text messaging to try and cause consumers to move to your plans which start at $5 a month? And didn't raising the price of text messaging have the intended effect of encouraging and pushing consumers into the bucket plan because the individual text message was going up and up and up? This is not necessarily something that is not legal, of course, but I just want to understand how your marketing plan works. The more it costs on an individual text message, the more likely it is that a consumer is going to go to a bucket plan, right?

Mr. MILCH. We believe so, Mr. Chairman, at Verizon.

Chairman KOHL. Mr. Watts.

Mr. WATTS. I believe that is the case, and I believe our customers have voted with their pocketbooks and said that is where they get their most value, yes, sir.

Chairman KOHL. Okay. Mr. Milch and Mr. Watts, one way that phone companies restrict competition is by locking in customers to 2-year service contracts. If a consumer wants to switch carriers in advance of the contract's expiration, then they must pay a hefty early termination fee, as you know, sometimes as high as $250.

What is your policy for prorating the contracts where the fee is reduced to reflect the amount of time remaining on the contract? For your information, you both have prorated termination fees, but they are inadequate in the sense that if an AT&T customer cancels their plan only a month before the 2-year contract is up, they still have to pay much more than a prorated amount to terminate. You understand that.

Mr. WATTS. I understand the question. Unfortunately, it is not accurate. It would have been true a year ago, but it is not true today. We have changed our early termination fee process where it does decline on a monthly basis. And if you get to the point that you just described, today you would pay basically, assuming a 2-year contract, 1/24 of the contract price in early termination penalty. So that is no longer the case, but I concede it was at one time.

Chairman KOHL. I hope you are right. According to my information, if they want to terminate just a month before, now it costs

$60, which is not 1/24. I could be wrong on that, but that is my information.

Mr. WATTS. Well, I will certainly confirm that, but my recollection is that we have changed it where it declines on a pro rata basis. And if that is not—I will get back to you either way, but I will certainly get back to you if I am incorrect.

Chairman KOHL. All right. Anybody else have a comment that you want to make, some idea or some thought you want to express? Mr. Kelsey.

Mr. KELSEY. Mr. Chairman, on early termination fees in particular, I would just add that, you know, from a consumer perspective, it is a huge barrier to switching carriers because that fee starts out at such a high level; and just because it goes down $5 a month, it does not seem to them to be linked to what the cost is to the carrier of that consumer then switching service. After they have been with a carrier for 18, 20 months and have paid back the subsidy on the phone, there is no reason that a consumer that wants to switch providers should not be able to and should not be able to also bring their phone with them.

Thank you.

Chairman KOHL. Ms. Itkin.

Ms. ITKIN. Thank you, Mr. Chairman. I just wanted to state that Mr. Milch and Mr. Watts talked about how much investment their companies were making. Well, Cricket has made billions of investments, too, in building facilities. We spent over $1 billion on spectrum in the advanced wireless services, and we are putting people to jobs, to work today building out networks. And I think it is important we are able to offer affordable prices on our plans despite the kind of investments that we are putting into the network. And I think it is very important that we have reform for spectrum policy and roaming policy so that competitors like us can continue to be successful today and in the future.

Chairman KOHL. Thank you.

Mr. Keshav.

Mr. KESHAV. I would like to take a moment to respond to Mr. Watts and Mr. Milch on the points that they raised about my prior testimony. But first about the fact that the incremental cost is what I am considering and not the cost to build the network in the first place.

I would like to point out that my analysis is looking at the cost—establishing equivalence between voice minutes and text message minutes, and the voice minutes also have to pay for the up-front cost. So I believe that my analysis is, in fact, accurate.

Mr. Milch also made the point that cost is not relevant to the issue, that prices are not set that way. I completely agree with him. There need not be any relationship between price and cost, and my testimony is focusing purely on the cost. I have no comment to make about the prices.

Finally, I would like to raise a point that Senator Klobuchar made about the rural areas. Rural areas always have a problem because the amount of revenue that can be derived per square inch in rural Minnesota is a lot less than what a carrier can derive per square inch in Manhattan. And if you do want equivalent quality of service in both areas, you have to do what was done by the Con-

gress in 1920, which is the universal service obligation that AT&T took on, and put in some kind of obligation. But that means it will be a cross-subsidy from more expensive markets to currently less-dense markets. That will be something that needs to be decided by policy. It is not something that competition is going to fix, in my opinion.

Thank you very much, sir.

Chairman KOHL. Thank you.

Mr. Milch.

Mr. MILCH. Mr. Chairman, thank you very much for the opportunity to appear here today. In conclusion, I would only reiterate my belief that the wireless market in America is a great success story, and it is a great success story that we need to look at and take a lesson from. That lesson is that under the current set of rules, which are very light-handed, there has been hundreds of billions of dollars of investment; many, many jobs that have been created and are still going to be created out of the wireless industry in this country, and that innovation has been startling and prices overall have gone down.

So I believe that we have a situation that, with all due respect, we ought to be very careful if we are going to muck with it.

Thank you, Mr. Chairman.

Chairman KOHL. I thank you so much, and all the other panelists, for being here today. We are going to leave the record open for 1 week, and I believe that today's hearing demonstrates the importance of encouraging vigorous competition in the industry as well as focusing on text messaging pricing. We will continue to closely follow these issues on this Committee. I believe that the Justice Department and the FCC should be taking action to ensure that undue barriers to competition in the cell phone industry are removed, including by the FCC enacting the necessary regulatory reforms.

As always, this Subcommittee is interested in encouraging competition in the interest of both capitalism and the consumers who support capitalism. So we thank you all for being here today.

This hearing is concluded.

[Whereupon, at 3:53 p.m., the Committee was adjourned.]

[Questions and answer and submission for the record follow.]

QUESTIONS AND ANSWERS

cricket

July 6, 2009

The Honorable Herb Kohl, Chairman
Subcommittee on Antitrust, Competition Policy and Consumer Rights
Committee on the Judiciary
United States Senate
308 Senate Hart Building
Washington, DC 20510

Dear Chairman Kohl:

In response to your questions following the June 16, 2009 hearing entitled, "Cell Phone Text Messaging Rate Increases and the State of Competition in the Wireless Market," I submit the following answers on behalf of Cricket:

1) **Are there difficulties in gaining the right to "roam" on other carriers' networks a barrier to Cricket becoming a national competitor? Please explain. What regulatory reforms do you believe could address this issue?**

The difficulties that Cricket and other mid-sized and rural carriers face in negotiating roaming agreements with the nation's largest carriers are definitely a barrier to effective competition. As Cricket noted in comments that it recently filed with the FCC on the state of competition in the wireless industry, automatic roaming agreements play a critical role in the wireless industry, plugging coverage holes that exist in *every* carrier's network so that subscribers can obtain seamless coverage wherever they travel. As a result of concentration within the wireless industry, the largest carriers have both the incentive and the ability to foreclose competition and engage in anticompetitive practices. The competitive problems are even more severe in wholesale markets, because carriers can only enter into agreements with other carriers offering service on a compatible format (i.e., CDMA, GSM, and iDEN).

There are several regulatory reforms that Cricket believes are necessary to ensure that there is a vibrant community of wireless providers, including mid-sized and rural carriers, so that all consumers have a range of competitive options from which to choose:

*First*, the FCC should close a loophole in its 2007 order on roaming known as the in-market exception, under a carrier may refuse roaming service in any area where the requesting carrier holds a wireless license or spectrum usage rights. *See Reexamination of Roaming Obligations of Commercial Mobile Radio Service Providers*, Report and Order and Further Notice of Proposed Rulemaking, 22 FCC Rcd 15817, 15835 ¶ 48 (2007). That loophole does not serve customers or promote competition; it simply enables the nation's largest carriers to place substantial obstacles in the path of their competitors. Several carriers (including Cricket) have filed petitions for reconsideration in WT Docket No. 05-265 that are primarily focused on eliminating the in-market exception, and those petitions are still pending. The entire wireless industry—except for Verizon and AT&T—have allied to support repeal of the in-market exception.

*Second*, the FCC should implement an automatic data roaming obligation. In its 2007 order, the FCC declined to impose any roaming obligation for non-interconnected services, such as data roaming for



VerDate Nov 24 2008 11:47 Jun 28, 2010 Jkt 056833 PO 00000 Frm 00032 Fmt 6633 Sfmt 6633 S:\GPO\HEARINGS\56833.TXT SJUD1 PsN: CMORC

56833.001

wireless broadband. The FCC instead sought further comment on whether automatic roaming should apply to data, but so far it has not taken any action on that score. Cricket views an automatic data roaming obligation as critical to the continued growth of competitive wireless service offerings that will discipline the pricing and services of entrenched "big wireless" operators Verizon and AT&T. A data roaming obligation would also promote ubiquitous broadband availability. Congress recently allocated more than $7 billion in grants to encourage broadband availability and adoption, and wireless broadband can offer connectivity where no fixed service is available.

*Third*, the FCC should take steps to correct the excessive concentration of wireless spectrum in the hands of the nation's largest carriers. Specifically, Cricket and other mid-sized and rural carriers have urged the FCC (i) to identify and allocate additional spectrum to meet the growing demand for wireless voice, broadband and other advanced data services, and (ii) to adopt auction eligibility regulations to ensure that licenses are assigned to a range of different providers to promote competition and prevent the nation's largest providers from stockpiling even more spectrum.

**2) (a) Do high costs imposed on you for ROW (rights of way), pole attachments, and cell-tower siting impact consumers? Please explain.**

Local jurisdictions in many cases directly impact how quickly wireless carriers can bring new services to consumers. As a new entrant in numerous cities around the country, Cricket must work with local jurisdictions to gain approval to construct cell sites or simply co-locate antennas on existing structures. There is little predictability as each jurisdiction operates its own timeline and delays are frequent. On behalf of the wireless industry, CTIA has filed a petition with the FCC seeking a 45- and 75-day "shot clock" for siting consideration decisions. *See Petition for Declaratory Ruling to Clarify Provisions of Section 332(c)(7)(B) to Ensure Timely Siting Review and to Preempt under Section 253 State and Local Ordinances that Classify All Wireless Siting Proposals as Requiring a Variance*, WT Docket No. 08-165 (petition filed July 11, 2008). Cricket supports that petition.

**(b) Do rates you pay to other phone companies to terminate traffic to your customers originate impact consumers? Please explain.**

Yes. While most wireless carriers terminate traffic on a "bill and keep" basis, many ILECs and CLECs charge high per-minute fees for traffic termination. These fees constitute a high percentage of costs to operate a wireless carrier which are passed onto consumers. There are also many instances of "traffic pumping" schemes whereby traffic only originates one-way such as with "chat lines." Cricket supports intercarrier compensation reform by which all carriers exchange traffic on a "bill and keep" basis. The FCC has periodically attempted to make comprehensive reforms to the intercarrier compensation scheme, but many of these issues remain unresolved. *See Developing a Unified Intercarrier Compensation Regime*, CC Docket No. 01-92

**(c) How do rates a carrier pays to backhaul traffic to other companies to and from a cell-tower impact consumers? Please explain.**

Backhaul or "special access" is becoming a more expensive component of operating wireless service. As consumers demand more data-heavy applications such as video, the amount of backhaul required increases. Because the incumbent telephone companies have considerable market power in this area, Cricket believes that it is necessary for the FCC to intervene in order to ensure that rates are fair and reasonable. In 2005, the FCC released a Notice of Proposed Rulemaking to examine the regulatory framework to apply a price cap on interstate special access services. *See Special Access Rates for Price Cap Local Exchange Carriers*, WC Docket No. 05-25, *AT&T Corp. Petition for Rulemaking to Reform*



VerDate Nov 24 2008 11:47 Jun 28, 2010 Jkt 056833 PO 00000 Frm 00033 Fmt 6633 Sfmt 6633 S:\GPO\HEARINGS\56833.TXT SJUD1 PsN: CMORC

56833.002

*Regulation of Incumbent Local Exchange Carrier Rates for Interstate Special Access Services*, RM-10593, Order and Notice of Proposed Rulemaking, 20 FCC Rcd 1994 (2005). In 2007, the Commission asked the parties to refresh the record with additional information. *See* FCC Public Notice, Parties Asked to Refresh Record in the Special Access Notice of Proposed Rulemaking, 22 FCC Rcd 13352 (2007). The Commission has not yet acted on that issue. A range of industry participants have formed a coalition (the NoChokePoints Coalition) to address the concerns over special access charges—additional information about the coalition may be found at http://nochokepoints.org/

**(d) With respect to any of these issues, do you advocate any regulatory or legal changes?**

See above.

**3) Does Cricket face challenges in gaining needed spectrum? Please explain. With respect to this issue, do you advocate any regulatory or legal changes?**

As wireless broadband and other high-capacity data services become more prevalent, additional spectrum will be necessary to provide the speeds and coverage that consumers increasingly demand. Under the FCC's existing policies, however, the nation's largest carriers have been able to stockpile vast amounts of available spectrum, depriving mid-sized and rural carriers of this much-needed resource. For example, in-the most recent auction of 700 MHz spectrum, Verizon and AT&T acquired the lion's share of available spectrum. And, in Auction 66 (which assigned-AWS-1 spectrum), the four largest carriers accounted for 78 percent of all the winning bids, and they won approximately 60 percent of the total MHz-POPs available in that auction. The largest carriers are likely to use their spectrum holdings to prevent effective competition and demand that other carriers pay exorbitant rates or agree to unreasonable terms in order to access such spectrum.

As noted above, Cricket and other mid-sized and rural carriers have urged the FCC (i) to identify and allocate additional spectrum to meet the growing demand for wireless voice, broadband and other advanced data services, and (ii) to adopt auction eligibility regulations to ensure that licenses are assigned to a range of different providers to promote competition and prevent the nation's largest providers from stockpiling even more spectrum.

Sincerely,

Laurie Itkin
Director, Government Affairs



VerDate Nov 24 2008 11:47 Jun 28, 2010 Jkt 056833 PO 00000 Frm 00034 Fmt 6633 Sfmt 6633 S:\GPO\HEARINGS\56833.TXT SJUD1 PsN: CMORC

56833.003

**Sen. Kohl's Follow-Up Questions for Hearing on**

**"Cell Phone Text Messaging Rate Increases and the State of Competition in the Wireless Market"**

**For Joel Kelsey**

1. Given the recent history of rising prices for text messaging prices on a per message basis, do you think we have to worry about rising text messaging rates or rising prices for other cell phone services? Given the phone companies' record, are you concerned that that they are likely to raise prices again?

Joel Kelsey, Consumers Union:

AT&T has documented a six-fold increase in the number of text messages within two years. With the fixed costs associated with text messaging, as the explosion of texting unfolds, carriers should be experiencing economies of scale and sharing that savings with consumers. However, this profitability is not shared with the consumer, as price points for texts continue to rise. Instead, according to an industry analysis, average revenue per texting subscriber has risen 150% in the last four years.[1]

In 2007 the average U.S. mobile phone subscriber paid $506 for service, much more than consumers in the U.K. ($374) or Spain ($293), and ranking America twenty second of the thirty countries studied by the international OECD.[2] While it is true that U.S. wireless carriers are able to provide lower costs per minute, this is because U.S. consumers are charged for the minutes to both send and receive calls, unlike consumers in many other countries who pay only for the minutes they use to make calls. As a result of this pay-to-send and pay-to-receive dynamic, carriers in the U.S. are able to extract some of the highest average returns per user (ARPU) by pricing consumers into tiered service plans and high monthly rates.[3]

**Given the high comparative cost of cell phone service in the U.S., the decreasing amount of competition in the wireless industry and the lack of market pressure on the four largest firms to share savings with subscribers, we believe consumers will continue to face rising oligopoly prices to get wireless products. However, fewer customers will be able to afford these products and services, growth will be slower than it could be, and all of the economic surplus generated by ongoing innovation will be directed to the incumbent industry, rather than being shared with the consumers.**

---

[1] Randall Stross, "What Carriers Aren't Eager to Tell You About Texting," *The New York Times*, December 28, 2008, http://www.nytimes.com/2008/12/28/business/28digi.html [accessed June 9, 2009].
[2] *See* Organization for Economic Co-Operation and Development, *OECD Communications Outlook 2007*, 6 (2007). The OECD average is $439 per year.
[3] Frieden, Rob. "The Way Forward on Wireless." In *...And Communications For All* edited by Amit Schejter, 153-167. Lexington Books, 2009.



56833.004

2. Until recently, the cell phone industry was a real competition success story. The industry had many national and regional providers, giving consumers numerous choices, driving down prices, and competing to introduce new services. But in the last few years, the wireless industry has sharply consolidated through mergers and acquisitions. Today four companies combine to control 90% of the market. The top two companies have a 60% market share. Now we see these sharp increases in text messaging prices on a per message basis. Are these price hikes just a harbinger of things to come in the cell phone market, and will it begin to more closely resemble the cable and local phone markets, where consumers have few choices and rarely see the benefits of vigorous price competition?

Joel Kelsey, Consumers Union:

Unfortunately, there is little reason to believe the current market and regulatory structure will support or promote more competition in the future. Effective competition in the wireless market requires, among other things, minimal barriers to entry and growth for competitors, maximal consumer choice, and an absence of explicit barriers to innovation – all features not present in the wireless market. There are pronounced and extensive barriers to effective competition in the modern wireless market, including limited access to spectrum; unreasonable prices, terms, and conditions for special access to data networks; and horizontal concentration in both the wireless and wireline markets. This lack of effective competition has led to negative provider conduct, highlighted by the symmetrical pricing in SMS texting.

3. A consumer is charged both to send and to receive a text message. Once a text message is sent to a consumer's phone, he is charged 20 cents (or one of his plans' text messages is used). But a consumer has no way to decline a text message to avoid being charged. With a phone call one can always just decide not to answer the phone, but this option is not available when receiving a text message. Wouldn't a simple solution to this problem be to simply not charge customers for incoming messages? Are you aware of any technological reason as to why phone companies could not allow this?

Joel Kelsey, Consumers Union:

While it is true that U.S. wireless carriers are able to provide lower costs per minute, and they have been able to show lower costs for all of the texts sent over their network, this is because U.S. consumers are charged to both send and receive calls and texts, unlike consumers in many other countries who pay only for the minutes they use to make calls or send texts. As a result of this pay-to-send AND pay-to-receive dynamic, carriers in the U.S. are able to extract some of the highest average returns per user (ARPU) by pricing consumers into tiered service plans and high monthly rates.

Charging consumers only for the minutes and texts they choose to send would change this dynamic. **Also, allowing consumers to "opt-out" of being charged heavy overage fees would provide relief to the thousands of consumers in monthly texting plans that un-knowingly go over their monthly allotment of text messages. These consumers are forced to pay $0.20 for each message sent and received over their**



VerDate Nov 24 2008 11:47 Jun 28, 2010 Jkt 056833 PO 00000 Frm 00036 Fmt 6633 Sfmt 6633 S:\GPO\HEARINGS\56833.TXT SJUD1 PsN: CMORC

56833.005

**monthly allowance, often resulting in "sticker shock" when they receive a monthly bill several hundred dollars more than they expected.** As a result of both competition and of government intervention, banks and credit card companies have set up systems to help consumers avoid account overage charges – wireless companies could do the same.

4. (a) I understand that, under current FCC rules, a competitive cell phone carrier has no right to interconnect to another carrier's network with respect to "data" – that is, for internet connections necessary for e-mail and many other applications found on "smart phones" today. Would you support a regulatory change which would require cell phone carriers to grant data roaming on reasonable and non-discriminatory terms? Why or why not?

Joel Kelsey, Consumers Union:

Absolutley. The current market norm of unreasonable special access pricing, terms, and conditions represents a significant barrier to entry and growth in the wireless market; particularly in the offering of mobile Internet access services. Smaller (and new) carriers that do not own broadband infrastructure rely on special access transmission paths to support their telecommunication businesses.

Currently, few incumbent providers of special access exist. As a result, they are able to use their market power to offer high special access prices.[4] For example, in 2007, Verizon received a 700% rate of return for the use of its special access services.[5]

The Federal Communications Commission should ensure that these small providers are protected from unreasonable special access pricing so that they can focus on using their capital for providing better services and products to customers.

(b) Would you support ending the "in-market" exemption to voice roaming requirement, the exemption that relieves a cell phone provider from providing voice roaming with respect to any carrier that has a wireless license to provide service in a specific geographic area, even if that carrier has not actually built out that area? Why or why not?

Joel Kelsey, Consumers Union:

Yes. The FCC placed a so-called "home" or "in-market" exception that allows wireless carriers to refuse to provide automatic roaming in any area where the requesting carrier merely holds a wireless license or spectrum usage rights. The exception now gives large facilities-based network operators, such as AT&T and Verizon, the ability to deny roaming to a smaller competitor if that competitor has a license within a large operator's

[4] *See, e.g.*, Peter Bluhm and Robert Loube, *Competitive Issues in Special Access Markets*, National Regulatory Research Institute (January 21, 2009); Matthew Lasar, "Report Reignites Fights over Special Access Rates," *Ars Technica* (January 26, 2009), *at* http://arstechnica.com/tech-policy/news/2009/01/report-reignites-fight-over-special-access-rates.ars.

[5] *See* Derek Turner, Free Press, *Dismantling Digital Deregulation: Towards a National Broadband Study* (2009).



VerDate Nov 24 2008 11:47 Jun 28, 2010 Jkt 056833 PO 00000 Frm 00037 Fmt 6633 Sfmt 6633 S:\GPO\HEARINGS\56833.TXT SJUD1 PsN: CMORC

56833.006

any given "home" area. This creates a disincentive for small companies to seek out additional spectrum licenses – a precondition for building towers and expanding service and growing as a competitor – lest they lose their rights to roam in those regions adjacent to their current service territories, those regions where they most need to grow and yet most need to maintain service.

Even within current service territories, the "in-market" loophole means that consumers of a competitive wireless provider's service may be unable to make or receive calls in portions of their own city or town, but will receive roaming service when traveling outside of their "home" market. This means that some consumers may receive wireless service in their homes, but may be unable to make calls in their workplace or while traveling around town. Such service limits are highly confusing for the consumer. Further, the in-market exception may prevent some subscribers from accessing emergency alerts, placing the safety of consumers at undue risk.

5. Some industry experts argue that allowing cell phone to gain exclusive agreements to sell the most in-demand cell phones harms competition by denying to competitors the ability to sell those cell phones, and advocate that the FCC take action to ban "handset exclusivity." Does allowing the practice constitute a barrier to competition?

Joel Kelsey, Consumers Union:

Yes. Handset exclusivity arrangements limit consumer choice, restrict device innovation, and lead to higher prices. Of the ten most popular handsets in the market in 2008, eight were tied to various network providers under exclusive deals.[6] For the consumer, the result is an artificial restriction on choice of service provider and on switching service providers.

Exclusivity arrangements impact not only consumer choice, but also market structure, as they constitute a barrier to entry for small service providers. As a direct consequence of exclusive deals between device manufactures and incumbent national service providers, small service providers cannot offer the use of popular handsets and smartphones over their networks. Thus, their services are less attractive to consumers who are driven towards the popular devices that are offered by the incumbent providers, leading to further increase in their market power. These arrangements are of particular concern with respect to the future of wireless services. The future of wireless services, broadband access, and wireless Internet access services in particular, are tied to the use of smart phones, and without the ability to offer them, rural providers will not have the ability to generate enough revenues to deploy 3G networks. If no action is taken, similar anti-competitive dynamics can be expected to develop across the future wireless data marketplace.

---

[6] *See* Kristen Beckman, "By the Numbers: Top Ten Most Popular U.S Handsets in November," RCR Wireless (January, 8, 2009) *available at* http://www.rcrwireless.com/article/20090108/wireless/901079989/1081/newsletter33



VerDate Nov 24 2008 11:47 Jun 28, 2010 Jkt 056833 PO 00000 Frm 00038 Fmt 6633 Sfmt 6633 S:\GPO\HEARINGS\56833.TXT SJUD1 PsN: CMORC

56833.007

Additionally, handset exclusivity arrangements give wireless service providers leverage to exert influence over handset innovations that do not meet their approval. Currently, a handset manufacturer is at the whim of the network carrier (with whom the exclusivity contract is drawn) when it introduces new features to market its handset. For example, RIM (the manufacturer of Blackberry) was prohibited by AT&T from offering free mapping services to Blackberry users since AT&T wanted to offer consumers its own mapping services for a fee. Also, AT&T has blocked, disabled, or mutated various other features such as Bluetooth technology, SIM card mobility, direct sound and photo fie transfer capabilities, GPS services, and call timers (*i.e.,* to keep track of minutes used).

Exclusive deals are not required by the structure of the wireless market, and instead serve as artificial impediments to competition and innovation. In an established market, device manufacturers do not have to rely on exclusive arrangements with service providers to market their devices or to ensure sufficient revenues to fund the research and development of new products and services. Indeed, this is the case in other established markets, such as Asia and Europe. Handset manufacturers in Asia and Europe are able to sell 70-80% of devices independent of exclusive deals with service providers.[7] Thus, rather than representing an essential feature of the market, handset exclusivity deals are an artificial impediment to competition in the wireless market.

6. Beyond those already discussed, what other government policies or legal or regulatory changes do you advocate to remove barriers to competition in the cell phone market?

Joel Kelsey, Consumers Union:

The consolidating wireless marketplace deserves more federal oversight.

At minimum **Congress should** continue to hold hearings to investigate anti-consumer practices that result from a lack of competitive market pressures, and FCC and DoJ should closely scrutinize any potential future merger proposals.

In addition, **the FCC should** clarify that the Internet Policy Statement applies to wireless (this would be consistent with the Commerce Department's NOFA in response to spending $4.3 billion in ARRA stimulus money on broadband infrastructure); devise a better definition for structural market power in the Fourteenth CMRS Competition Report; re-implement spectrum caps; enter into a rulemaking on data roaming; and ban handset exclusivity deals.

By blocking software applications, like Skype and SlingPlayer Mobile, the current four major wireless carriers have failed to deliver services that allow consumers to realize the full potential of the Internet. Absent a substantial shift in competition policy, there is no reason to expect that the current market participants will alter their present course. In other words, enforcement of neutrality principles are necessary, but not sufficient, to achieve innovation and robust competition with regard to cell phones and software

[7] *See* Marguerite Reardon, "Will unlocked cell phones free consumers," *CNet News* (January 24, 2007), *available at* http://news.cnet.com/Will-unlocked-cell-phones-free-consumers/2100-1039_36152735.html.



VerDate Nov 24 2008 11:47 Jun 28, 2010 Jkt 056833 PO 00000 Frm 00039 Fmt 6633 Sfmt 6633 S:\GPO\HEARINGS\56833.TXT SJUD1 PsN: CMORC

56833.008

applications, and to encourage competitively priced and ubiquitously available broadband access for all consumers. **The DoJ and the FTC should** investigate the market and consumer harm caused by wireless companies exerting their market power over mobile device manufacturers to block software applications.

In addition, the **Government Accountability Office should** study the practical impediments to consumers that attempt to switch carriers and determine what impact they have on consumer choice and on effective competition.

Please reference our joint filing before the Federal Communications Commission:

Comments of Consumer Federation of America, Consumers Union, Free Press, Media Access Project, New America Foundation and Public Knowledge. *In the Matter of the Annual Report and Analysis of Competitive Market Conditions With Respect to Commercial Mobile Services.* WT Docket No. 09-66.



VerDate Nov 24 2008 11:47 Jun 28, 2010 Jkt 056833 PO 00000 Frm 00040 Fmt 6633 Sfmt 6633 S:\GPO\HEARINGS\56833.TXT SJUD1 PsN: CMORC

56833.009

**Sen. Kohl's Follow-Up Questions for Hearing on**

**"Cell Phone Text Messaging Rate Increases and the State of Competition in the Wireless Market"**

**For Randy Milch**

**1. You testified that you did not cooperate or in any way agree with your competitors in setting your per message price for text messaging. So why did Verizon raise its per message price from 10 to 15 cents in March 2007, and from 15 to 20 cents in March 2008? How did Verizon choose 15 cents as your per message price in March 2007, and 20 cents in March 2008?**

**Answer**

Verizon Wireless independently sets the prices all of its products, and has not cooperated or in any way agreed with competitors in setting prices on text messaging. Verizon Wireless sets its prices based on market conditions. Those market conditions have driven the average price per text message down nearly 70% since December 2006, from roughly 3 cents per message to 1 cent per message today. Pricing for postpaid text messaging sold in buckets – nearly 99% of all text messaging on the Verizon Wireless network – varies widely among carriers.

Verizon Wireless did not raise its per-message prices for prepaid text messaging in the way described in the question. As I noted in my testimony, Verizon Wireless prepaid customers pay 1 or 5 or 10 or 20 cents per text message depending on the price plan. As with postpaid bucket pricing, pricing for prepaid "pay-as-you-go" text messages varies widely among carriers.

Post-paid text messages sold individually without a plan account for less than 1% of the total number of text messages over Verizon Wireless' network. Verizon Wireless has changed prices for "pay-as-you-go" text messaging as part of its usual practice of adjusting prices for its wireless voice and data services to meet changing demand and market conditions. In March 2007, Verizon Wireless matched the price Sprint and AT&T then charged for "pay-as-you-go" text messages (Sprint had charged 15 cents a message since October 2006). And in March 2008, Verizon Wireless matched Sprint's 20 cent price (which had been instituted six months earlier, and had not been matched by any other carrier at that point).

Verizon Wireless has changed its prices for postpaid "pay-as-you-go" messaging based on the changing demand characteristics of text message users. Customers who are substantial users of text messaging have moved to bucket plans; the remaining customers are low-volume users with inelastic demand. Almost by definition, low-volume text messaging users do not choose wireless service based on text message pricing, and thus there is no competitive benefit to undercutting competitors by a few pennies on the price for rarely used "pay-as-you-go" text messaging services.



56833.010

**2. Prof. Keshav testified that the cell phone companies' profit margin on text messages is today 80% for those who participate in text message plans, and 98% for with respect to those consumers who purchase text messages on a per message basis. Do you disagree with this calculation? If you disagree, please explain why and state the actual amount of profits Verizon realizes from text messages.**

**Answer**

I have not calculated Verizon Wireless' "profit margin on text messages," nor would it be sensible to do so. Verizon Wireless is a multiproduct firm, with all of those products provided over the same network. Every multiproduct firm has to recover all of its costs across its various products. An analysis that looks only at the cost of sending the next text message over a network ignores the fact that you have a network in the first place. Verizon had to make huge investments in spectrum, in cell sites and in computers and switching equipment in order to be able to carry even the first text message. Text messages have to carry all those shared and common costs along with every other product we have.

I testified during the hearing that there is no reason in a competitive market to believe at any one particular point in time prices will match costs, and that prices in a competitive market are not set based only on cost. Indeed, Prof. Keshav agreed that there need not be any relationship between price for text messaging and the cost of that service.

**3. Wasn't a major motive for price increases in text messaging paid for on a per message basis to cause consumers to move to your text messaging plans, which start at $ 5 a month? Didn't raising the price of text messaging from 5 cents to 20 cents per message over four years have the intended effect of pushing consumers into "bucket" plans?**

**Answer**

In Verizon Wireless' experience, consumers generally prefer the low cost, predictability and convenience of bucket plans as compared to per-message usage pricing. Verizon Wireless benefits from customer adoption of bucket plans because it reduces customer complaints and increases customer satisfaction.

All but the most casual text message user likely will choose from among the bucket plans as a result of the low-cost pricing of these bucket plans relative to pay-per-message plans. Customer adoption of bucket plans is a good thing, since it is the widespread adoption of bucket plans and the much lower cost-per-text message of these plans that has driven the six-fold increase in text messaging over the last few years.

**4. Verizon charges customers on a per message basis when they go over their allotted "bucket plan" number of text messages. Should we be concerned about per message price increases here because they will end up pushing more and more customers into your most expensive "unlimited" plans which cost $20 per month? Given the fact**



56833.011

**that each additional text message costs the carrier virtually nothing, won't you make the highest profit when customers choose the highest cost "bucket plan"?**

Customers are free to choose the plan that best matches their texting usage. Plans enabling unlimited texting at a flat rate have been a key driver of plummeting text message prices and soaring text messaging adoption. Consumers who do not worry about the incremental cost of sending the next text message are likely to send many more text messages. Verizon Wireless' effective price per text message has fallen nearly 70% since December 2006, while the number of text messages sent has gone up six-fold. Thus, Verizon Wireless' text message pricing is not a cause for concern; rather, it reflects fierce rivalry among wireless carriers and the proper functioning of a competitive marketplace. If Verizon Wireless makes a greater return on its investment by cutting prices to consumers and stimulating much greater text message use, that is good both for consumers and Verizon Wireless' investors.

**5. (a) What percentage of Verizon's customers do not buy text messaging "bucket" plans?**

**Answer**

Approximately forty-two percent of customers do not buy text messaging plans. Roughly 26% of Verizon customers do not text at all.

**(b) Aren't the consumers who don't buy text messaging plans the ones most vulnerable to price increases -- that is, low income customers and elderly customers who only use text messaging occasionally?**

**Answer**

Verizon Wireless does not track the demographics of casual text message users. But for customers who only occasionally text, there's little cost to text messaging. Such text message usage is discretionary.

**6. Given what we've seen with respect to text messaging price increases on a per message basis over the last few years, can we expect the per message price to rise to 25 cents, or beyond, in the next year or two? And can we expect the price for your text messaging plans to go up a dollar or two a month? What would prevent AT&T from such price increases?**

**Answer**

The competitive market sets the price for text messaging (and wireless services generally). As noted above, text message prices have been falling rapidly as a result of this competition. Verizon Wireless has no current plan to raise text messaging prices. It has no



56833.012

information on what would prevent AT&T from raising prices, other than the competitive dynamics of the market.

**7. Until recently, the cell phone industry was a real competition success story. The industry had many national and regional providers, giving consumers numerous choices, driving down prices, and competing to introduce new services. But in the last few years, the wireless industry has sharply consolidated through mergers and acquisitions. Today four companies combine to control 90% of the market. Your two companies have a 60% market share. Now we see these sharp increases in text messaging prices on a per message basis. Are these price hikes just a harbinger of things to come in the cell phone market, and will it begin to more closely resemble the cable and local phone markets, where consumers have few choices and rarely see the benefits of vigorous price competition?**

As I noted in my testimony, the cell phone industry has been – and very much continues to be – a competition success story. Wireless innovation is breathtaking, investment has been massive, and prices have relentlessly decreased. The rapid decline in text message pricing reflects a competitive market, not a consolidated one.

As the Federal Communications Commission noted in its most recent report on competition in the wireless industry, "[m]any operators continue to seek to fill gaps in their coverage areas, as well as to increase the capacity of their existing networks. As the Commission has previously concluded, operators with large footprints can achieve economies of scale and increased efficiencies compared to operators with smaller footprints." These economies and efficiencies lead directly to lower prices and more seamless provision of services.

The wireless industry continues to see robust new entry. Leap Wireless and MetroPCS are growing rapidly. Leap headlined its most recent earnings release by noting "Leap Reports Record Net Customer Additions of 500,000 for First Quarter 2009 – Strong Performance Results in 114 Percent Year-Over-Year Growth in Net Customer Additions." Leap recently entered the Philadelphia, Chicago and Washington-Baltimore markets, while MetroPCS announced expansion into New York and Boston. Cable companies such as Cox Communications and Comcast now are entering the wireless market. And mobile virtual network operators such as Virgin Mobile (five million customers) and Tracfone (ten million customers) compete with traditional carriers using prepaid wireless offerings.

**8. What is Verizon's policy for prorating the contract so the fee is reduced to reflect the amount of time remaining on the contract? If it is not proportional to the time remaining on the contract, please explain why not?**

**Answer**

Verizon Wireless reduces its early termination fee of $175 by $5 dollars for each full month toward the minimum term that the customer completes. Verizon Wireless provides



56833.013

significant subsidies on most handsets it sells to post-pay customers. Without an early termination fee, Verizon Wireless might not be able to provide those subsidies.

**9. (a) I understand that, under current FCC rules, a competitive cell phone carrier has no right to interconnect to another carrier's network with respect to "data" – that is, for internet connections necessary for e-mail and many other applications found on "smart phones" today. Would you support a regulatory change which would require cell phone carriers to grant data roaming on reasonable and non-discriminatory terms? Why or why not?**

**(b) Would you support ending the "in-market" exemption to voice roaming requirement, the exemption that relieves a cell phone provider from providing voice roaming with respect to any carrier that has a wireless license to provide service in a specific geographic area, even if that carrier has not actually built out that area? Why or why not?**

**Answer to (a) and (b)**

Congress and the FCC should not expand regulation of roaming agreements among wireless companies to mandate home roaming or to include all data services. The Commission's existing regulation, supplemented by the right of any company to file a complaint seeking relief from unreasonable or discriminatory roaming practices, has served consumers well. By intruding into the terms of commercial agreements, additional roaming rules would discourage providers from investing in their own networks by allowing companies to improperly piggyback off the investments of competitors.

Please see attached Verizon Wireless' recent submission to the House Energy and Commerce Committee, which addresses this issue in greater detail.

**10. Consumer advocates argue that allowing cell phone to gain exclusive agreements to sell the most in-demand cell phones harms competition by denying to competitors the ability to sell those cell phones, and advocate that the FCC take action to ban "handset exclusivity." What is Verizon's position on handset exclusivity? Doesn't allowing the practice constitute a barrier to competition?**

Neither Congress nor the FCC should regulate the terms of device supply arrangements between manufacturers and providers. Exclusivity arrangements are common throughout the American economy, and drive innovation. Restricting them would clearly undermine innovation and disserve consumers. Moreover, Verizon Wireless has offered to limit exclusivity for devices manufactured by two of its largest suppliers – LG and Samsung – for a period not to exceed six months so that smaller carriers can gain access to those devices sooner.

Please see attached Verizon Wireless' recent submission to the House Energy and Commerce Committee, which addresses this issue in greater detail.



56833.014

**11. At the hearing, you stated that you do not know of any technology that permits customers to block incoming text messages on a per message basis. Wouldn't a solution to the concerns that customers have to pay for incoming messages they don't want be to not charge customers for incoming messages?**

Verizon Wireless works hard to makes sure customers do not receive unwanted text messages, because a non-trivial volume of unwanted text messages would lead to customer dissatisfaction and complaints.

Verizon Wireless employs sophisticated tools in its network to detect incidences of unsolicited electronic messages, or "spam," sent to our customers' wireless devices. Verizon Wireless also provides customers with self-help tools to manage and even restrict receipt of spam messages that do manage to get through the network-based spam countermeasures. As noted on Verizon Wireless' website:

> **How do I block unwanted text messages?** You can use either Internet Spam Controls or Call & Message Blocking available through Spam Controls (My Verizon>My Services>Verizon Safeguards>Spam Controls).
>
> If the message is originating from an email address or web domain, visit Internet Spam Controls and enter the email or domain to be blocked. Internet Spam Controls allow you to designate and block up to 15 email addresses, vtext IDs and/or Internet Domains from sending text, picture or video messages to you.
>
> If the message is originating from a phone number, visit Call & Message Blocking and enter the phone number of the individual who you wish to block. Call & Message Blocking allows you to designate and block up to 5 phone numbers from sending text, picture or video messages to you.

Many of Verizon Wireless' customers are on unlimited text message plans, or enjoy unlimited text messaging with other Verizon Wireless customers, and thus many customers do not pay for unwanted text messages that manage to evade these company and individual protective measures.

Verizon Wireless continues to spearhead legal efforts to block spam. Verizon Wireless supported the passage of federal legislation aimed at providing consumers with control over receipt of spam. Verizon Wireless has also been aggressive battling spam in court. Over the past two years, Verizon Wireless has filed lawsuits against several companies it has accused of sending text message spam to its customers.



56833.015

**AT&T Response to Sen. Kohl's Follow-Up Questions for Hearing on "Cell Phone Text Messaging Rate Increases and the State of Competition in the Wireless Market"**

1. You testified that you did not cooperate or in any way agree with your competitors in setting your per message price for text messaging. So why did AT&T raise its per message price from 10 to 15 cents in January 2007, and from 15 to 20 cents in March 2008? How did AT&T choose 15 cents as your per message price in January 2007, and 20 cents in March 2008?

**Answer**:[1] We base our pricing decisions on an independent assessment of a number of factors, including how particular prices fit into the full suite of our product offerings, the state of competitor prices, demand trend lines, and the like. No one factor necessarily is determinative and the various factors are weighed, and decisions are made, based on the marketplace circumstances extant at the time of a pricing decision.[2] In connection with changes over the past two years in the price for the pay-per-use, or "PPU," pricing option for text messaging that AT&T offers, we evaluated various factors and determined – in January 2007 and in March 2008 – to continue to meet our competitors' rates for the that option. AT&T's rate for the PPU pricing option has not changed since March 2008.

2. Prof. Keshav testified that the cell phone companies' profit margin on text messages is today 80% for those who participate in text message plans, and 98% for with respect to those consumers who purchase text messages on a per message basis. Do you disagree with this calculation? If you disagree, please explain why, and state the actual amount of profits AT&T realizes from text messages.

**Answer**: As explained during the hearing on this matter, we are not in a position to break down our profit margins at this level of granularity. We make significant investments every year to deploy and support products and services across the full range the communications landscape,[3] and we utilize integrated networks and technologies to take full advantage of available efficiencies and innovations. Likewise, our pricing is designed on a holistic, integrated basis to allow us an opportunity to obtain a return on the entirety of our investments, not just the investments associated with some particular node or component of our network used to offer one pricing option for one product.[4]

3. Wasn't a major motive for price increases in text messaging paid for on a per message basis to cause consumers to move to your text messaging plans, which start at $ 5 a month? Didn't raising the price of text messaging from 5 cents to 20 cents per message over four years have the intended effect of pushing consumers into "bucket" plans? Is it possible that some customers chose bucket plans only because the rates increased so much?

---

[1] For your ease of review, we have attempted, where applicable, to identify where in previous discussions on these topics (whether in correspondence, written testimony, or live testimony), we have addressed a similar question.

[2] *See also* Written Statement of Wayne Watts for June 16, 2009, hearing ("Watts Stmt.") at 3-4.

[3] In 2009, AT&T's U.S. capital outlays are planned to be as much as $18 billion. This is the largest U.S. capital plan of any American company in any industry.

[4] *See also* unedited hearing transcript dated as of June 26, 2009 ("Tr.") at 41.



56833.016

**Answer**: As we previously explained, the PPU pricing option is often not the optimal choice for the vast majority of our customers and our package plans have a number of notable benefits:

> In our experience, the PPU pricing option often results in large and unpredictable swings in a customer's total bill, leading to significant customer dissatisfaction and complaints to our customer care lines. Package plans ensure extremely low prices, choice, predictability, and easy-to-understand bills, and thereby greatly improve the overall customer experience. That is, we saw that demand for text messaging was exploding; did not want our customers to suffer unexpectedly large or constantly changing monthly bills; and fixed the potential problem of unhappy customers by avoiding them in the first place. Now, the overwhelming majority of our customers purchase text message packages, and most of them pay pennies or less than a penny per message.[5]

That is, we do not "push" our customers into pricing plans, but our overall pricing structure is designed to emphasize those plans that deliver maximum value to our customers.[6] Thus, it is possible that some customers who were utilizing the PPU pricing option decided to purchase a monthly text messaging plan in response to increases in the PPU price, however, we are confident that, in doing so, those customers are enjoying greater value and predictability in their use of our text messaging service.

4. AT&T charges customers on a per message basis when they go over their allotted "bucket plan" number of text messages. Should we be concerned about per message price increases here because they will end up pushing more and more customers into your most expensive "unlimited" plans which cost $20 per month? Given the fact that each additional text message costs the carrier virtually nothing, won't you make the highest profit when customers choose the highest cost "bucket plan"?

**Answer**: As an initial matter, one of the premises of your question – "that each additional text message costs the carrier virtually nothing" – is not correct. As we previously have testified, demand for text messaging service has increased 600% in just two years. The notion that carriers would increase text messaging output at such a rate, while simultaneously meeting the ever-growing voice-traffic needs of their customers, and not face material costs, simply is not supported by facts.[7] When originally developed and deployed, text messaging capabilities were expected to be of limited use; there was no expectation that they literally would transform, as they have, the manner in which Americans communicate. As a result, wireless providers have had to quickly respond to a massive shift in social behavior by augmenting their networks and, in particular, the elements of their networks that exist only to enable text messaging. Indeed, the exponential growth in text messaging affects the most fundamental – and sometimes scarce – component of a wireless network: spectrum. Every text message occupies a control channel, the number of which is finite based on a carrier's spectrum capacity. Thus, regardless of the actual

---

5 Watts Stmt. at 5. *See also* Tr. at 9.

6 *See also* letter from Tim McKone, Executive Vice President – Federal Relations, to Senator Kohl, dated October 6, 2008, at 2.

7 Tr. at 61-62.



56833.017

size of a text message, each of the billions of messages that traverse the AT&T network in a given month separately occupies channel capacity on the network – capacity that is shared by the millions of other voice and text users and the billions of other messages. Put simply, making this transformative service available to millions of consumers and growing its output at exponential rates is not a cost-free exercise.

Beyond cost issues, there should be no concern about greater adoption of text messaging package plans. First, while AT&T does offer unlimited messages for $20/month, it also offers smaller packages, including 200 messages for $5/month and 1500 messages for $15/month. Thus, there is a package suitable for any customer interested in one. Second, the effective rates under these plans are very low; indeed, as we testified, AT&T's overall effective rate per message as of March 2009 was just $0.014 – 70% less than it was just two years ago.[8] Put simply, AT&T's package plans are not "expensive;" they are a boon to our customers.

5. (a) What percentage of AT&T's customers do not buy text messaging "bucket" plans?

**Answer**: Approximately 25% of AT&T's text-messaging users utilize the PPU pricing option in those months when they send text messages, and less than 1% of AT&T's postpaid text messaging volume is handled on a PPU basis.

(b) Aren't the consumers who don't buy text messaging plans the ones most vulnerable to price increases -- that is, low income customers and elderly customers who only use text messaging occasionally?

**Answer**: We are not aware of any facts or analyses indicating that low-income or elderly customers make up a disproportionate percentage of users of the PPU pricing option. Moreover, because the vast majority of PPU users are low volume users, the actual economic impact to such customers of the PPU rate increases is quite small.

6. Given what we've seen with respect to text messaging price increases on a per message basis over the last few years, can we expect the per message price to rise to 25 cents, or beyond, in the next year or two? And can we expect the price for your text messaging plans to go up a dollar or two a month? What would prevent AT&T from such price increases?

**Answer**: First, as noted in Mr. Watts's testimony, AT&T has not changed the price for PPU text messages in over a year, and the price for all other text messages has declined dramatically over the same period of time. Second, given the dynamic and intensely competitive nature of the wireless industry, it is impossible to predict the price of any product or option in a year or two. Indeed, if the last two years are any guide, we reasonably can expect that customers will continue to enjoy low prices and greater capabilities when utilizing AT&T's text messaging services. And, we can conclusively confirm, as we have explained above and in previously in our testimony, that AT&T will continue to unilaterally evaluate its entire pricing portfolio based on a variety of factors to deliver maximum value to our customers. The competitive marketplace and our own ingenuity in satisfying the demands of our customers will be the driving forces.

---

[8] Watts Stmt. at 4; Tr. at 8.



56833.018

7. Until recently, the cell phone industry was a real competition success story. The industry had many national and regional providers, giving consumers numerous choices, driving down prices, and competing to introduce new services. But in the last few years, the wireless industry has sharply consolidated through mergers and acquisitions. Today four companies combine to control 90% of the market. Your two companies have a 60% market share. Now we see these sharp increases in text messaging prices on a per message basis. Are these price hikes just a harbinger of things to come in the cell phone market, and will it begin to more closely resemble the cable and local phone markets, where consumers have few choices and rarely see the benefits of vigorous price competition?

**Answer**: The U.S. wireless industry was and is a highly competitive industry. Indeed, it is the most competitive wireless industry in the world, American consumers reap the rewards of this competitive success story, and there is no reason to think that this will change. Moreover, the facts belie any suggestion that there is a lack of effective competition in the wireless industry.[9] Nine independent companies each serve more than four million retail customers. More than 95 percent of the U.S. population – those living in urban, suburban and rural America – are served by at least three competing carriers, and more than half live in areas served by at least five. Eight years ago there were 100 million U.S. wireless customers. Today, there are more than 270 million, and in 2008 they used more than 2.2 *trillion* minutes – a tenfold increase since 2000. At the same time, prices have declined precipitously. Revenue per minute has fallen 89 percent since 1994, and U.S. wireless prices are much lower than in any other major industrialized country. And, while AT&T and Verizon are currently the two largest wireless providers, the next two largest, Sprint and T-Mobile, have a combined 82 million customers, and the carriers that round out the top 10 have another nearly 20 million customers among them.[10] And, while it is true that the top four U.S. carriers represent 86% of the market, in 23 of the 26 OECD countries, the top four carriers represent 100% of the market.

8. In a letter dated June 23, 2009, you corrected your testimony at the hearing regarding early termination fees. You stated that, after the first month, AT&T reduced its $ 175 early termination fee on a two year contract by $ 5 per month, so that after 23 months a customer will still owe $ 60 if he or she terminated the contract. Why is that AT&T's policy, rather than simply reducing the early termination fee in a manner proportional to the amount of time remaining on a customer's contract (i.e., reducing the early termination fee by 1/24 for each month on a customer's two year contract)?

**Answer**: Early termination fees ("ETFs") are an essential component of a long-standing practice in the wireless industry that has put the best devices into American consumers' hands at discounted prices. Our customers typically purchase a handset for a discounted price, and sign a one or two year agreement promising to pay a monthly fee for service.[11] The ETF provides a

---

[9] See also Watts Stmt. at 1-3.

[10] Just by way of example, Metro PCS, which now has over 6 million customers, and Leap Wireless, which now has over 4 million customers, added 700,000 and 500,000 net new customers, respectively, just in the first quarter of this year. These are huge growth rates, and these carriers are now a major competitive force in this industry.

[11] This is not a required arrangement. If the customer is not interested in a term commitment, she can simply pay the full, non-discounted amount for the device at the outset, make no term commitment, and there would be no



56833.019

necessary and appropriate assurance that we will have a fair opportunity to recover the discount that underlies that low handset price. In the absence of an ETF, this system would be severely undermined, and U.S. consumers, like their counterparts in Europe and other parts of the world, would pay significantly more for a smaller selection of handsets. Aside from its impact on innovation, this approach would be regressive, effectively pricing the most capable devices beyond the reach of many low-income Americans. Moreover, a simple pro rata ETF would not likely be viable. Under AT&T's ETF policy, a customer who signed a two-year contract would face an ETF balance of $60.00 at the end of 23 months. This amount, which is only 35% of the original ETF, nonetheless incentivizes the customer to fulfill the remaining term of the agreement, which, as explained, is the foundation for the substantial up-front cost that AT&T incurred. An inflexible pro rata system would not engender these same incentives and the discount system would be undermined.

9. (a) I understand that, under current FCC rules, a competitive cell phone carrier has no right to interconnect to another carrier's network with respect to "data" – that is, for internet connections necessary for e-mail and many other applications found on "smart phones" today. Would you support a regulatory change which would require cell phone carriers to grant data roaming on reasonable and non-discriminatory terms? Why or why not?

**Answer**: AT&T supports the FCC's existing roaming regulations, which effectively serve their twin purposes of ensuring that a customer has service when roaming outside his/her provider's service areas and promoting investment in the nation's wireless infrastructure. The FCC has explained that, "if a carrier is allowed to 'piggy back' on the network coverage of a competing carrier in the same [home] market [where it has its own spectrum], then both carriers lose the incentive to build-out into high cost areas in order to achieve superior network coverage."[12] Thus, the so-called home market exception encourages carriers to compete and invest by building out service in areas where they have spectrum. Likewise, the FCC has correctly declined to extend roaming obligations to non-switched services such as wireless broadband Internet services. The wide array of developing "data" services, devices, applications and standards make it impossible to craft an automatic roaming rule without severe detrimental network effects that would be harmful to consumers. This is especially true today, as wireless networks face the daunting challenge of handling streaming video, an application for which they were not originally designed. Any government mandate, in short, would discourage the very infrastructure investment in broadband wireless services that our nation sorely needs.

(b) Would you support ending the "in-market" exemption to voice roaming requirement, the exemption that relieves a cell phone provider from providing voice roaming with respect to any carrier that has a wireless license to provide service in a specific geographic area, even if that carrier has not actually built out that area? Why or why not?

**Answer**: *See* response to Questions 9(a), above.

---

ETF regardless of when she might discontinue service. In fact, the customer can bring her own device to our network and obtain service without signing up for a term commitment.

[12] *See Reexamination of Roaming Obligations of Commercial Mobile Radio Service Providers*, Report and Order and Further Notice of Proposed Rulemaking, 22 FCC Rcd. 15817, ¶ 49 (2007) ("*Automatic Roaming Order*").



56833.020

10. Consumer advocates argue that allowing cell phone to gain exclusive agreements to sell the most in-demand cell phones harms competition by denying to competitors the ability to sell those cell phones, and advocate that the FCC take action to ban "handset exclusivity." What is AT&T's position on handset exclusivity? Doesn't allowing the practice constitute a barrier to competition?

**Answer**: Exclusive arrangements of all kinds permeate the U.S. marketplace today and are essential to robust competition. In the wireless industry, exclusive handset arrangements have provided U.S. consumers the most advanced devices in the world at distinctly affordable rates. Indeed, the successful collaborations of U.S. wireless carriers and handset manufacturers over the past few years have shifted the center of handset innovation from Europe and Asia – where it rested for years – to the United States. By allowing a carrier and a manufacturer to share the enormous risks and costs of bringing an inventive but unproven new device to market, exclusive arrangements both quicken the pace of technological advancement and incentivize the carrier to offer even greater handset subsidies to its customers. Now, the U.S. leads the world, with the best devices being designed and manufactured by American companies and American consumers often enjoying the earliest – and cheapest – access to them. Thus, the true victims of any prohibition on exclusive arrangements would be consumers; they would face less innovation, fewer choices, and significantly higher prices for handsets.

11. At the hearing, you stated that you do not know of any technology that permits customers to block incoming text messages on a per message basis. Wouldn't a solution to the concerns that customers have to pay for incoming messages they don't want be to not charge customers for incoming messages?

**Answer**: As we explained in a letter subsequent to the hearing on these issues, AT&T has deployed technology that offers customers an advanced level of control over their wireless services.[13] Smart Limits for Wireless™, a product primarily designed as a sophisticated parental control, allows for detailed limits and controls on the use of many capabilities of a wireless device. With specific reference to text messaging, limits can be set for the number of text messages that a device can send or receive, and text messages from specific mobile phone numbers can be blocked. The charge for this service is $4.99 per month per line. And, any customer can block all incoming text messages, free of charge. Thus, while some companies might consider an offering that does not include charges for incoming text messages, AT&T has selected a path that couples extremely high-value text messaging pricing with next-generation control options.

---

[13] See letter from Wayne Watts, Senior Executive Vice President and General Counsel, to Senator Kohl, dated June 23, 2009.



56833.021

Russ Feingold

# SUBMISSIONS FOR THE RECORD

**Statement of Senator Russell D. Feingold**
Hearing before the Senate Committee on the Judiciary
Subcommittee on Antitrust, Competition Policy and Consumer Rights
on
"Cell Phone Text Messaging Rate Increases
and the State of Competition in the Wireless Market"
June 16, 2009

Thank you, Mr. Chairman, for holding this important hearing.

Like my fellow 270 million cell phone users across the country, I am a daily beneficiary of the tremendous advances in wireless technology that have unfolded so rapidly over the past decade. But at the same time, I am concerned that consolidation in the wireless industry may be hurting vulnerable consumers, impeding fair competition, and stifling the next wave of innovation.

This past September, Chairman Kohl sent a letter to the nation's four largest wireless carriers, which together control 90% of the market. He asked why the cost to send or receive a text message has doubled in recent years, from 10 cents to 20 cents, when the cost of transmitting these messages has likely decreased. If anything, the skyrocketing volume of text messages and the ever-increasing efficiency of communications technology should have driven prices down to a fraction of where they are now.

In an attempt to explain this strange phenomenon, today's industry witnesses will highlight the fact that most cell phone users purchase bulk or unlimited texting plans. But 30 percent of all users are still paying 20 cents for every text message sent or received. These users are disproportionately likely to be poor or elderly. They may account for only 1% of text messaging volume, but they are in the absolute worst position to subsidize a 99% profit margin.

I will also pay close attention to today's discussion of how government and industry can best provide wireless coverage to rural users, in Wisconsin and across the country. Our spectrum and roaming policies must ensure that no communities are cut off from the increasingly wireless internet.

Mr. Chairman, thank you again for holding this hearing and for your leadership on this critical set of consumer and innovation issues.



56833.022

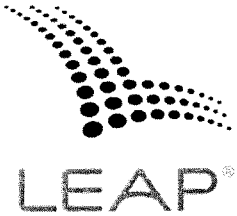


**Written Testimony of**

**Laurie Itkin**

**Director of Government Affairs**

**Leap Wireless International, Inc. and Cricket Communications, Inc.**

***Before the***

**U.S. Senate Committee on the Judiciary**

**Subcommittee on Antitrust, Competition Policy & Consumer Rights**

***On***

**Tuesday, June 16, 2009**

56833.023

Chairman Kohl and Members of the Subcommittee, my name is Laurie Itkin and I am Director of Government Affairs for Leap Wireless International, Inc., and its wholly owned subsidiary, Cricket Communications, Inc. (collectively, "Cricket"). On behalf of Cricket, I thank you for inviting me to testify on the competitiveness of the wireless industry. While I understand the focus of today's hearing is on the *retail* market for text messaging, which I will address, I would also like to raise Cricket's concerns about the *wholesale* market for text messaging, as well as voice and data services. A properly functioning wholesale market allows small and mid-sized carriers to create and maintain vigorous competition in the industry, driving prices down and value up. But first I would like to describe my company and the unique role Cricket plays in the wireless marketplace.

## I. OVERVIEW OF CRICKET'S SERVICES AND SUBSCRIBERS

Cricket was launched a decade ago and has grown into the seventh largest facilities-based wireless carrier in the U.S. Some have called us the "Poster Child" for the Federal Telecommunications Act. Along with our joint venture partners, we have built a network covering almost 84 million individuals in 32 states and we are steadily expanding into new markets where the telecommunications needs of the community are not being met by existing providers.

Cricket provides its over four million customers with unlimited voice, text messaging and wireless broadband services for a flat monthly rate without requiring a fixed-term contract, credit check or early termination fees. These services are specifically tailored to bring the benefits of wireless telecommunications to consumers left behind by other providers. Cricket's unique and diverse customer base reflects the company's commitment to reach the underserved. Hispanics,



56833.024

African-Americans, and other minorities comprise the majority (56 percent) of Cricket's customers, compared with just 29 percent of other wireless carriers' customers. Additionally, 74 percent of Cricket's customers have annual household incomes of less than $50,000 and 62 percent have annual incomes of less than $35,000. In contrast, just 32 percent of other wireless carriers' customers have annual household incomes of less than $50,000.

The usage patterns of Cricket's customers also differ from other wireless consumers. Company surveys indicate that Cricket's customers use almost twice as many minutes per month as the industry average. Approximately 70 percent of Cricket's customers have "cut the cord" and live in a household without traditional landline phone service, compared to the industry average of 15 percent. And nearly 50 percent of customers subscribing to Cricket's flat-rate wireless broadband service have never had Internet access at home—not even dial-up.

## II. THE MARKET FOR TEXT MESSAGING SERVICE

Since its inception, Cricket has never charged its customers a penny for incoming text messages, regardless of the customer's selected calling plan. There has been much in the news over the past few years about consumers receiving unsolicited text messages and, adding insult to injury, being charged for them. While many carriers are exploring ways to protect their customers from "spam," Cricket's gone a step farther by ensuring our customers never get charged for it. We at Cricket are pleased to provide an alternative to parents who are shocked to receive a $600 bill caused by a child's text messaging frenzy. Customers subscribing to Cricket's $40 plan receive unlimited incoming and outgoing text messaging, in addition to unlimited local and long distance calling. As a company committed to offering innovative and value-rich services to our customers, we recently began offering unlimited text messaging to Mexico for only $3 per month.



VerDate Nov 24 2008 11:47 Jun 28, 2010 Jkt 056833 PO 00000 Frm 00056 Fmt 6633 Sfmt 6633 S:\GPO\HEARINGS\56833.TXT SJUD1 PsN: CMORC

56833.025

Cricket is the pioneer of affordable, unlimited wireless services – all offered on a month-to-month basis. We provide a competitive alternative to those consumers who do not want to be hit with hefty early termination fees if they want to change carriers.

As the Subcommittee today examines why the four largest carriers recently raised their prices for text messaging, Cricket would like to offer a simple observation: *the best regulator of prices is a competitive marketplace.* Cricket is providing competitive pressures on prices – recently, many of our competitors have offered "copy cat" plans in certain markets, trying to replicate Cricket's success with unlimited pricing (although often at higher monthly rates). So how about creating that type of robust competition in every area of the country? What is preventing that dynamic from occurring? There are two interlinked policy issues over which the U.S. Senate and specifically this Subcommittee can engage: spectrum consolidation and the wholesale pricing (and related terms) for roaming services imposed by the super-carriers.

## III. ACCESS TO SPECTRUM

Cricket aspires to become a national carrier, which we believe will allow more consumers to experience affordable and innovative voice and broadband services. In order to achieve that goal, we need more spectrum so that we can offer service in more locales and have enough bandwidth to offer high-speed broadband data services. However, the nation's largest carriers have acquired the lion's share of spectrum that the FCC has auctioned in recent years. And – as if that wasn't enough – they have systematically absorbed dozens of smaller competitors. Two



VerDate Nov 24 2008 11:47 Jun 28, 2010 Jkt 056833 PO 00000 Frm 00057 Fmt 6633 Sfmt 6633 S:\GPO\HEARINGS\56833.TXT SJUD1 PsN: CMORC

56833.026

firms—AT&T and Verizon—now have a majority of market share, both in terms of revenue and subscribers, and four firms account for more than 90% of revenue and subscribers.[1]

Cricket and other regional and small carriers, in advance of auctions conducted by the previous administration, urged the FCC to design competitive bidding rules that would result in more spectrum being made available to new entrants. Those efforts were unsuccessful. Instead, the largest carriers advocated for large regional and national spectrum assignments, knowing full well that smaller carriers do not have the same "deep pockets" to bid on large licenses. As we and others predicted, the auctions unfortunately resulted in the largest companies getting larger, with smaller carriers priced out of the bidding for the majority of the spectrum. Mr. Chairman, in your September 2008 letter to the four largest wireless carriers, you articulated your concerns about "consolidation and increased market power by the major carriers," and referenced the proposed acquisition of Alltel by Verizon Wireless as the latest example.[2] Those concerns could not be more valid.

## IV. AUTOMATIC ROAMING IS ESSENTIAL TO PROMOTE COMPETITION AND PROTECT CONSUMERS

Regardless of their aspirations, new and emerging carriers cannot build a national network overnight, so we need to roam on our competitors' networks while we build out our own spectrum. However, due in significant part to the spectrum consolidation mentioned above, the nation's largest carriers now have both the incentive and the ability to foreclose competitors from

---

[1] *See, e.g.*, *Implementation of Section 6002(b) of the Omnibus Reconciliation Act of 1993*, Thirteenth Report, WT Docket No. 08-27 (rel. Jan. 16, 2009) at Table A-4; P. Cramton, A. Skrzypacz, and R. Wilson, "The 700 MHz Spectrum Auction: An Opportunity to Protect Competition in a Consolidating Industry" (Nov. 13, 2007), at 2.

[2] The Hon. Herb Kohl. Letter to Lowell McAdam, President & CEO, Verizon Wireless, et al. (Sept. 9, 2008).



VerDate Nov 24 2008 11:47 Jun 28, 2010 Jkt 056833 PO 00000 Frm 00058 Fmt 6633 Sfmt 6633 S:\GPO\HEARINGS\56833.TXT SJUD1 PsN: CMORC

56833.027

entering new markets. Cricket and other small, regional, and rural carriers have increasingly encountered abusive and anti-competitive business practices, such as the largest carriers' refusal to provide wholesale automatic roaming at just, reasonable, and non-discriminatory rates, terms and conditions. Automatic roaming agreements play a critical role in the wireless industry, plugging coverage holes that exist in *every* carrier's network so that consumers can obtain seamless coverage wherever they travel. Without an automatic roaming obligation, for example, there is no guarantee that consumers traveling outside their provider's network will receive emergency alerts sent via text message. Whether seeking help with car trouble—or even contacting family and receiving critical information in the wake of a hurricane or terrorist attack[3]—consumers "should [not] have to see the words 'No Service' on their wireless device" in a time of need.[4] Consumers simply should not be stranded when they travel away from home.

In 2007, the FCC clarified that automatic roaming is a common carrier service that must be provided on just, reasonable, and non-discriminatory terms and conditions, and found that roaming benefits all wireless subscribers by promoting nationwide, seamless coverage.[5] Unfortunately, at that time, the FCC allowed an "in-market" exception to that obligation advocated by Verizon and AT&T, which allows a carrier to refuse roaming service in any area where the requesting carrier holds a wireless license or spectrum usage rights.

This loophole effectively guts the rule and defeats many of the public interest benefits that the FCC sought to promote in the first place. The "in-market" exception punishes emerging

---

[3] *See Reexamination of Roaming Obligations of Commercial Mobile Radio Service Providers*, Report and Order and Further Notice of Proposed Rulemaking, 22 FCC Rcd 15817, 15888 (2007) ("*Roaming Order*"), Statement of Commissioner Deborah Taylor Tate (observing that roaming can benefit "public safety, or even homeland security").

[4] *Id.*, Statement of Commissioner Jonathan S. Adelstein, Approving in Part, Concurring in Part.



VerDate Nov 24 2008 11:47 Jun 28, 2010 Jkt 056833 PO 00000 Frm 00059 Fmt 6633 Sfmt 6633 S:\GPO\HEARINGS\56833.TXT SJUD1 PsN: CMORC

56833.028

carriers that seek to expand through acquiring new spectrum by depriving them of common carrier roaming rights in their newly licensed areas. Thus, the in-market exception actually runs counter to the FCC's stated goals of "encouraging facilities-based service and supporting consumer expectations of seamless coverage when traveling outside the home area."[6] It is simply infeasible for a carrier to build and maintain facilities that provide service to 100% of its licensed area—particularly where a carrier holds licenses that cover very large regions, such as the Economic Area ("EA") licenses and Regional Economic Area Grouping ("REAG") licenses sold in Auction 66. Even the largest carriers, including Verizon and AT&T, are nowhere close to building out facilities to cover all of their licensed service areas and must therefore rely on roaming to fill holes in coverage. Furthermore, some spectrum licenses remain encumbered by federal government use, and carriers must work with government entities to clear this spectrum before using it to provide retail service.

Nearly all carriers—large and small, rural and urban, incumbent and competitive—have agreed in connection with pending petitions for reconsideration of the *Roaming Order* that the FCC should close the in-market loophole.[7] Only Verizon and AT&T support affirmance of the current rule, which is hardly surprising: they clearly have much to gain by protecting their market power, and the in-market exception allows them to extract above-market prices from

---

[5] *See Roaming Order*, 22 FCC Rcd at 15827–28 ¶ 26

[6] *Id.*, 22 FCC Rcd at 15835 ¶ 49.

[7] Carriers and organizations supporting elimination of the in-market exception include Leap, MetroPCS, Sprint, T-Mobile, United States Cellular Corporation, SpectrumCo (a joint venture that includes cable operators Comcast, Time Warner, and Cox), SouthernLINC, the Organization for the Promotion and Advancement of Small Telecommunications Companies ("OPASCO"), and the Rural Telecommunications Group.



VerDate Nov 24 2008 11:47 Jun 28, 2010 Jkt 056833 PO 00000 Frm 00060 Fmt 6633 Sfmt 6633 S:\GPO\HEARINGS\56833.TXT SJUD1 PsN: CMORC

56833.029

other carriers at the expense of consumer welfare, or even to deny roaming outright to the customers of competing carriers.

Verizon and AT&T argue that an automatic roaming obligation without any geographic restrictions would encourage smaller carriers to "free-ride" on carriers that have already invested in facilities construction.[8] But this argument is belied by the facts. Cricket, for example, has a demonstrated history of aggressively building out its licenses, despite the fact that it has limited resources and capital in comparison to the nation's largest carriers. Moreover, it is self-serving for these two carriers to argue that Cricket and other small and mid-sized carriers must build facilities reaching every corner of their licensed areas when they themselves still have not built out significant portions of their own networks even though they have had more than 20 years to do so and received their original licenses for free. Other national carriers recognize that automatic roaming is necessary to fill in coverage gaps and agree that the in-market exception does not make sense.[9] Even with an automatic roaming obligation, carriers still have the incentive to expand their own network while using roaming agreements to supplement service in the interim, just as the largest carriers have historically done.

It is also important to stress that Cricket and other carriers are not asking the FCC to adopt regulations that would prevent carriers from charging competitive rates and reaping a profit from their investments. Instead, Cricket and others merely urge the FCC to revaluate an ill-considered loophole that effectively allows the largest carriers to adopt anti-competitive practices and stymie the efforts of small, regional, and rural carriers to expand their network and

---

[8] *Id.* at ¶ 49.

[9] *See, e.g.*, Sprint Nextel Corp. Petition for Reconsideration (Oct 1, 2007) at 9–10; T-Mobile USA, Inc., Petition for Partial Reconsideration (Oct. 1, 2007) at 2–3.



VerDate Nov 24 2008 11:47 Jun 28, 2010 Jkt 056833 PO 00000 Frm 00061 Fmt 6633 Sfmt 6633 S:\GPO\HEARINGS\56833.TXT SJUD1 PsN: CMORC

56833.030

offer consumers a competitive alternative. In the end, the in-market exception forces consumers—particularly low-income and underserved consumers—to pay more for less coverage, or in some cases to lose coverage altogether.

The same of course is true for data roaming. A roaming obligation for data services will enhance the ability of small, regional, and rural carriers to enter the data services market and effectively compete against the largest carriers. Such a rule would also promote facilities investment and improve the provision of data services to poor and rural communities caught on the wrong side of the digital divide. Automatic roaming for data services—again, with no "in-market" exceptions—is integral to future wireless competition.

There is no procompetitive justification to explain the largest carriers' refusal to provide automatic roaming to other carriers on just, reasonable, and nondiscriminatory rates, terms and conditions, and without geographic carveouts. They clearly have adopted these practices in an effort to weaken the service offerings of their competitors—in spite of the fact that they have relied on such agreements to expand their own networks. These anti-competitive practices harm all consumers, but they disproportionately burden disadvantaged and rural populations, many of whom cannot afford or qualify for the wireless services provided by the nation's largest carriers.

We believe that having a roaming rule that applies nationwide without exception will reduce the ability of the largest carriers to continually price voice and data wholesale roaming services at multiples *above the retail rate* they charge their own customers – the situation that exists today. At a minimum, this state of affairs raises serious questions about whether the wholesale market for roaming services is functioning effectively or competitively.

## V. VERIZON-ALLTEL MERGER



VerDate Nov 24 2008 11:47 Jun 28, 2010 Jkt 056833 PO 00000 Frm 00062 Fmt 6633 Sfmt 6633 S:\GPO\HEARINGS\56833.TXT SJUD1 PsN: CMORC

56833.031

The most recent example of the linkage between further consolidation and anticompettive roaming practices is the recently-consummated merger between Verizon Wireless and Alltel. Cricket was one of the lead opponents of this transaction because we relied on Alltel for approximately 25% of our roaming traffic and feared that if Verizon acquired Alltel, it would impose anticompetitive restrictions on the old Alltel territory. That is precisely what is unfolding.

The FCC ultimately subjected its approval of the merger to several roaming conditions, which Verizon itself proposed, in order to ensure that the merger would not lead to anti-competitive harms.[10] Among other things, the FCC conditioned approval of the transaction on Verizon's commitment to give roaming partners the option of selecting either the Verizon or Alltel agreement to govern the exchange of all roaming traffic with the merged company, and to keep the rates provided in those agreements frozen for at least four years after the consummation of the merger.[11]

Since the merger, Verizon has attempted to circumvent the limited conditions that the FCC imposed in order to free itself of any restraints on the exercise of its market power. Specifically, Verizon has advanced a reading of those merger conditions that would render meaningless its commitment to honor rates for four years, because Verizon argues it can terminate existing roaming agreements within that time frame and then demand whatever non-rate conditions it chooses.

---

[10] Atlantis Holdings LLC and Cellco Partnership d/b/a Verizon Wireless, Memorandum Opinion and Order, 23 FCC Rcd 17444, 17525 ¶ 178 (2008) ("*Verizon-ALLTEL Order*").

[11] *Id.*



VerDate Nov 24 2008 11:47 Jun 28, 2010 Jkt 056833 PO 00000 Frm 00063 Fmt 6633 Sfmt 6633 S:\GPO\HEARINGS\56833.TXT SJUD1 PsN: CMORC

56833.032

Cricket has asked the FCC to clarify that the four-year commitment applies to all terms of existing roaming agreements—not just the rates. This understanding is consistent with a plain reading of the merger conditions, Verizon's own statements in filings with the FCC, and indeed, is confirmed by the statements of three Commissioners who voted to approve the merger.[12] Verizon has offered no legitimate policy or other justification to support its reading of the conditions—because there is none. The FCC adopted these conditions to protect consumers from potential abuses of market power and they should be strictly enforced.

I raise the Verizon-Alltel merger proceeding because it demonstrates the importance of adopting regulatory safeguards to prevent the nation's largest carriers from abusing market power. This transaction is one of many over the past several years that have consolidated the nation's scarce spectrum assets into the hands of a few, and as a result, these carriers have even greater incentive and ability to adopt anti-competitive practices, including the denial of automatic roaming, which will harm consumers in the long run. It is critically important that Congress and the FCC remain vigilant to ensure that the wireless industry is competitive and that all consumers have access to seamless wireless services at just, reasonable, and non-discriminatory rates.

* * * *

Chairman Kohl, I thank you and the Subcommittee again for allowing me to express the views of Leap and Cricket on these important topics.

---

[12] *Id.*, Statement of Commissioner Deborah Taylor Tate; *id.*, Statement of Commissioner Michael J. Copps, Concurring in Part, Dissenting in Part; *id.*, Statement of Commissioner Jonathan S. Adelstein, Concurring in Part, Dissenting in Part.



VerDate Nov 24 2008 11:47 Jun 28, 2010 Jkt 056833 PO 00000 Frm 00064 Fmt 6633 Sfmt 6633 S:\GPO\HEARINGS\56833.TXT SJUD1 PsN: CMORC

56833.033

Consumer Federation of America

Public Knowledge

**"Cell Phone Text Messaging Rate Increases and the State of Competition in the Wireless Market"**

Testimony
of

**Joel Kelsey**
**Policy Analyst**
**Consumers Union**

**On behalf of**
**Consumers Union, Consumer Federation of America, Free Press, the Media Access Project and Public Knowledge**

Before the

**Senate Judiciary Committee**
**Subcommittee on Antitrust, Competition Policy and Consumer Rights**

On

**June 16, 2009**

Chairman Kohl, Ranking Member Hatch and esteemed members of the Committee, thank you for the opportunity to testify before you, for the first time, on behalf of Consumers Union, the non-profit publisher of *Consumer Reports*[1] magazine, the Consumer Federation of America[2], Free Press[3], the Media Access Project[4] and Public Knowledge[5]. In addition to fighting for consumers in Washington, D.C., we also provide unbiased advice and educational materials to assist consumers in making marketplace decisions through our magazine and online products.

The wireless marketplace in the United States is growing at a breakneck pace. With over 270 million subscribers, wireless services have penetrated eighty seven percent of the total U.S. population.[6] However, the costs associated with cell phone use are growing just as quickly, while the number of providers is contracting. As more Americans are 'cutting the cord' and switching from wired to wireless services, increasing costs are reaching deep into the pocketbooks of the vast majority of American consumers.

---

[1] Consumers Union is a nonprofit membership organization chartered in 1936 under the laws of the State of New York to provide consumers with information, education and counsel about goods, services, health, and personal finance. Consumers Union's income is solely derived from the sale of *Consumer Reports*, its other publications and from noncommercial contributions, grants and fees. In addition to reports on Consumers Union's own product testing, *Consumer Reports* regularly carries articles on health, product safety, marketplace economics and legislative, judicial and regulatory actions that affect consumer welfare. Consumers Union's publications carry no advertising and receive no commercial support.

[2] The Consumer Federation of America is the nation's largest consumer advocacy group, composed of over 280 state and local affiliates representing consumer, senior, citizen, low-income, labor, farm, public power an cooperative organizations, with more than 50 million individual members.

[3] Free Press is a national, nonpartisan organization working to reform the media. Through education, organizing anc advocacy, we promote diverse and independent media ownership, strong public media, and universal access to communications.

[4] MAP is a non-profit, public interest law firm dedicated to promoting the public's First Amendment right to access diverse marketplace of ideas in mass media. For over 37 years, MAP has promoted the public interest before the Federal Communications Commission, the Federal Trade Commission, and the U.S. Courts, advocating for an open and diverse telecommunications system that protects the free flow of information, promotes universal and equitable access to communications and technology services, and encourages vibrant public discourse on critical issues facin; our society.

[5] Public Knowledge is a Washington DC based public interest group working at the intersection of communications policy and intellectual property law. Public Knowledge seeks to ensure that all layers of our communications system are open and accessible.

[6] *See* CTIA, "Wireless Quick Facts: Year End Figures," *at* http://www.ctia.org/media/industry_info/index.cfm/AID/10323.



56833.035

While much of my testimony today will focus on the growing rates of text messaging – a service where prices continue to increase for consumers despite representing a fixed cost for wireless providers – I would also like to apply a broader lens to bring into focus the mobile phone marketplace as a whole and the many irregularities consumers are experiencing. In this testimony I plan to look at the non-competitive increases in text message pricing; provide an outline of what we view as weak structural competition in the marketplace; detail several consumer abuses that result from these inadequate competitive pressures; and offer a few brief solutions to encourage more competition. A more detailed analysis submitted to the Federal Communications Commission by public interest groups can be found as the appendix to this written testimony.

**TEXT MESSAGE PRICING**

Wireless carriers have heavily adopted parallel, and increasing, pricing structures to maintain high text messaging rates. Since 2003, the price of text messaging has quadrupled for some carriers.[7] More recently, since 2005, every major carrier has at least doubled the prices for text messaging from ten cents to twenty cents per message.[8] This rising cost in service is a head-scratcher to consumers, because text messaging uses less data than almost any other service on a wireless network. Six hundred text messages contain less data than one minute of a phone call.[9] If we put that into dollars and cents, at twenty cents per text, those six hundred messages would cost $120 for the equivalent of a one minute phone call.

[7] Now charging 20 cents to send and receive text messages, in 2003, T-Mobile charged as little as 5 cents per message to customers who did not sign up for a monthly text messaging plan. Kristin Dizon, "Text Messaging Makes Cell Phones Even Hotter Among Kids," *Seattle Post-Intelligencer*, September 30, 2003, http://www.seattlepi.com/lifestyle/141809_texting30.html [accessed June 9, 2009].

[8] Marguerite Reardon, "The Rising Cost of Texting," *CNet News*, July 1, 2008, http://news.cnet.com/8301-10784_3-9982251-7.html [accessed June 9, 2009].

[9] One prominent wireless carrier's codec transmits at approximately 12.2 kilobits per second (kbps). 12.2 kilobits is the same amount of data as 10.89 completely full text messages. Furthermore, those numbers assume users fill all 160 characters, but most of us don't even come close. Assuming senders use only 20 characters on average, 3,240 texts have less data than one minute of phone airtime, and would cost $648 at the per message rate (not including costs to the receiver, $1296 if we include them).

These price increases for text message services appear to indicate a failure of competition, because the increases are manifestly unnecessary to cover provider costs. The cost a carrier incurs by transmitting an SMS message has not increased in recent years.

Text messaging files are very small, and the price of their transmission is negligible for the provider. A message travels as a wireless signal from the handset, through the wired telephone network, and as a wireless signal to the receiving handset. The text message is a free rider inside a so-called "control channel," or space that is already being used to operate the wireless network. In other words, text message does not use up any extra spectrum – once the carrier pays the cost of the underlying infrastructure and storage equipment. Thus, any revenue received by the provider on incremental text message usage is nearly pure profit.[10]

AT&T has documented a six-fold increase in the number of text messages within two years.[11] With the fixed costs associated with text messaging, as the explosion of texting unfolds, carriers should be experiencing economies of scale and sharing that savings with consumers. However, this profitability is not shared with the consumer, as price points for texts continue to rise. Instead, according to an industry analysis, average revenue per texting subscriber has risen 150% in the last four years.[12]

Perhaps even more troubling is that this most recent wave of text message increases came within mere months of one another among each of the four major carriers. Sprint was the first to raise its rates to twenty cents per message in October of 2007; followed by Verizon in March of 2008; AT&T waited thirty days to follow suit; and T-Mobile acted last in August of 2008. There is no indication that these carriers colluded in any way. However, conscious parallel behavior in the marketplace produces the same harm for consumers – we end up paying higher prices for services that should be selling for a little more than the cost of providing the service. At the very

[10] Randall Stross, "What Carriers Aren't Eager to Tell You About Texting," *The New York Times*, December 28, 2008, http://www.nytimes.com/2008/12/28/business/28digi.html [accessed June 9, 2009].
[11] McKone, Timothy (Executive Vice President, AT&T). Letter response to: Honorable Herbert Kohl (Chairman, Subcommittee on Antitrust, Competition Policy and Consumer Rights, US Senate). 2008 October 6. Available at: http://kohl.senate.gov/ATT%20LT%20100608.pdf
[12] Randall Stross, "What Carriers Aren't Eager to Tell You About Texting," *The New York Times*, December 28, 2008, http://www.nytimes.com/2008/12/28/business/28digi.html [accessed June 9, 2009].

least, the rising text message rates provide indication that there are inadequate competitive pressures in the marketplace.

We were relieved to see these apparent abuses of market power were so troubling that they prompted Senator Kohl (D-Wisconsin) to send a letter to all four major carriers questioning the nature of these rate hikes.[13] In response to the inquiry, providers were quick to point out to their monthly texting plans, which can charge users as little as 1 cent for a single message, or provide unlimited messaging for a flat fee. However, the carriers neglected to explain why the price of *individual* text messages, for customers who choose not to buy a monthly plan, has increased. In their written responses, the carriers also failed to address why all four companies raised the prices for individual messages by equal amounts at largely identical times. In other words, they failed to acknowledge Senator Kohl's concerns about the potentially anticompetitive nature of their pricing practices for individual text messages.[14] In a competitive market, providers should be fighting to gain subscribers by lowering prices for low-cost services instead of raising them.

**A CONSOLIDATED MARKET STRUCTURE**

The rising rates of text messages provide a window into the increasingly consolidated market structure of the U.S. wireless market place. We believe the parallel pricing practices highlighted through text messages is one example of inadequate competitive pressures and insufficient competition at the structural level of the wireless marketplace. The U.S. wireless marketplace has become dangerously concentrated through mergers and acquisitions, causing one former Federal Communications Comission Chairman to state:

> Right now the policy of the FCC has been to encourage AT&T and Verizon to become the twin Bells that dominate the wireless business. They're allowed to buy all the spectrum they can find. The anti-trust laws are waived and ignored every time they appear to be a problem. The FCC is the only spectrum auction entity in the world that does not carve out spectrum for new entrants. They do it in Mexico, Canada, the UK, China and Japan. Only here does the new entrant not get much of a chance. This is the only country in the world where the rule is the big guys can buy all of it. When you consolidate service providers, just like in the old days, when there was not two Bells like today but one, everybody knows what happens.15

---

[13] The Honorable Herb Kohl. Chairman, Subcommittee on Antitrust, Competition Policy and Consumer Rights, US Senate. Letter to: Lowell McAdam, Randall Stephenson, Dan Hesse, Robert Dotson (Verizon Wireless, AT&T, Sprint, T-Mobile). 2008 September 9. Available at: http://kohl.senate.gov/LT%20-%20cell%20ph%20CV.pdf

[14] Reponses available at: http://kohl.senate.gov/increasing-rates-for-wireless-services.cfm

[15] Reed Hundt, "Interview with Ed Gubbins," Telephony Online, 28 Feb 2008. http://telephonyonline.com/broadband/news/reed-hundt-auction-0228/ (accessed June 2009).

The "big four" largest wireless carriers (Verizon, AT&T, Sprint, T-Mobile) clearly dominate the wireless marketplace in the United States, collectively representing just over 90% of the subscriber base[16], with the top two firms representing over 65% of the subscriber market.

In 1993 Congress created a classification for the Commercial Mobile Radio Services (CMRS) and established the aim of promoting competition in this market as a fundamental goal for CMRS policy and regulation. Each year, the Federal Communications Commission submits annual reports analyzing competition in the wireless marketplace. In the last report (the *Thirteenth Report*), FCC gave a weighted national average HHI of 2674 to the wireless marketplace.[17] Under general antitrust analysis, HHI levels above 1800 are considered "highly concentrated."[18] An HHI level above 1800 in any individual economic area (EA) indicates severely limited competition under traditional analyses. Of the 171 EAs reported in the *Thirteenth Report*, exactly one had HHI under 1800 – and barely, at 1795.[19]

A deeper examination of the EA data in the *Thirteenth Report* paints a bleaker picture than even the high average HHI of 2674 indicates. Economies of scale should indicate a pattern across the EAs under which urban areas have more competitors and lower HHI than rural areas because competitors have more to gain from competing aggressively in those markets. Instead, according to 2007 data, both the most and least competitive regions are the most rural, demonstrating distortions that would not be expected in a competitive environment.[20] Furthermore, many EAs demonstrate substantially higher than average HHIs, ranging from the 4000s into the low 6000s.

---

[16] Based on SEC filings or corporate press releases publicly available and reflect customer figures as of 3/31/09: Verizon Wireless (86.6 million customers); AT&T (78.232 million customers); Sprint (49.083 million customers); T-Mobile (33.2 million customers). Total customers served by "Big 4" - 247,115,000

CTIA claimed 270.3 million wireless customers as of 12/31/08. Assuming that wireless growth has continued at the exact same rate in the 1Q of 2009 that it did in 2008, it would represent and additional 3.725 customers bringing the total US subscribers to 274,025,000.

This yields a 90.179% penetration rate for the "big four".

[17] *See Implementation of Section 6002(b) of the Omnibus Budget Reconciliation Act of 1993, Annual Report and Analysis of Competitive Market Conditions with Respect to Commercial Mobile Services, Thirteenth Report*, 23 FCC Rcd 2241 (2008) ("*Thirteenth Report*").

[18] Department of Justice and Federal Trade Commission, *Merger Guidelines*, 1997, Section 1.5; *see also* Neil B. Cohen and Charles A. Sullivan, *The Herfindahl-Hirschman Index and the New Antitrust Merger Guidelines: Concentrating on Concentration*, 62 Tex. L. Rev. 453, 461 (1983).

[19] See *Thirteenth Report* at Table A-3.

[20] Although population numbers in an arbitrary region are not an exact match for population density, the EAs used in the *Thirteenth Report* center around metropolitan areas, and thus large areas are indeed generally also dense areas.

In an unobstructed and competitive market, the potential benefit of market growth in these EAs should be sufficient to encourage additional investment and new entrants.

More evidence that less populated areas rely heavily on fewer providers has been provided by the FCC and the Department of Justice, in the review of the Verizon-Alltell merger. The DOJ identified 100 local markets where the level of competition from carriers other than Verizon and Alltell was so small that the merger represented a significant harm to competition. The FCC identified an additional 5 markets. Thus, there are 105 geographic markets where Verizon faces little or no significant competition from other national carriers.[21]

**MARKET PERFORMANCE**

When compared to the international stage, United States consumers pay more for cellular phone service per year than most other developed nations.

In 2007 the average U.S. mobile phone subscriber paid $506 for service, much more than consumers in the U.K. ($374) or Spain ($293), and ranking America twenty second of the thirty countries studied by the international OECD.[22] While it is true that U.S. wireless carriers are able to provide lower costs per minute, this is because U.S. consumers are charged for the minutes to both send and receive calls, unlike consumers in many other countries who pay only for the minutes they use to make calls. As a result of this pay-to-send and pay-to-receive dynamic, carriers in the U.S. are able to extract some of the highest average returns per user (ARPU) by pricing consumers into tiered service plans and high monthly rates.[23]

**PROVIDER CONDUCT IN PRICING**

From the perspective of consumers, text messaging is one of many examples of wireless provider conduct that herds consumers toward contracts for bundled services with lock-in features that limit consumer choice. Significant consolidation and lack of effective federal oversight of the

---

[21] *See* Reply Comments of United States Cellular Corporation, Attachment, William P. Rogerson, *An Economic Analysis of Exclusivity Arrangements between the Big Four Wireless Carriers and Handset Manufacturers* at 3 n.5, Docket No. RM-11497 (February 23, 2009).

[22] *See* Organization for Economic Co-Operation and Development, *OECD Communications Outlook 2007*, 6 (2007). The OECD average is $439 per year.

[23] Frieden, Rob. "The Way Forward on Wireless." In *...And Communications For All* edited by Amit Schejter, 153-167. Lexington Books, 2009.

wireless industry have greatly diminished price competition in the wireless market. In addition to text messaging the four national wireless carriers – AT&T, Verizon, Sprint, and T-Mobile – have each raised prices on individual services. By pricing consumers into service tiers, providers are able to generate some of the highest average return per users by extracting higher rates for individual services than the market will bear.

*Voice Plans*

Monthly voice plan options provided by the four largest carriers do not reflect the variable lifestyles of the American consumer. Instead, these plans offer little flexibility and consumer choice. Most wireless providers' monthly plans offer a minimum of 200-450 minutes for $29.99-$39.99 per month, and offer a prepaid or "pay-as-you-go" service for customers who choose not to purchase a monthly plan. Pay-as-you go services range in cost from 10 cents to 20 cents per minute, depending on the provider – a high price even in comparison to international calling card rates. While carriers will claim that these plans comprise a broad range of options for the consumer, these limited choices effectively force the majority of consumers to pay more per month to purchase more minutes than they need, and reveal weak price rivalry.

Further, wireless providers have failed to take advantage of economies of scale despite a recent boom in the volume of mobile subscribers, demonstrating a classic example of market power and anticompetitive behavior. U.S. wireless subscribers have nearly tripled between 2000 and 2008, topping 270 million, or 87 percent of the population, in December of last year.[24] Wireless provider earnings reflect this massive subscriber growth. Annualized total wireless revenues for the industry amounted to over $148 billion in 2008, up from around $45 billion in 2000 and $19 billion in 1995.[25] Yet, pricing plans remain largely parallel, and monthly plan and pay-as-you-go options remain costly for customers looking for economical solutions.

*Data Plans*

[24] *See* CTIA, "Wireless Quick Facts: Year End Figures," *at* http://www.ctia.org/media/industry_info/index.cfm/AID/10323 .
[25] *See id.*

Thirty-five million Americans accessed the Internet with the handheld mobile devices in 2007 – that's a tenfold increase in penetration in less than two years.[26] As wireless data usage has increased in recent years, more wireless voice service providers have begun to offer data services alongside voice. But the prices charged for these services seem far removed from any possible cost, indicating supracompetitive profits and a stark absence of provider rivalry over data prices.

Usage charges over minimal initial allowances can easily bump a consumer's bill by several thousand dollars. AT&T's $65 per month plan, for instance, includes 5GB of data service, with an overage charge of $0.00048 for each additional *kilobyte.* This seems innocuous, but it would add up to a whopping $480 for every extra gigabyte (GB) of data transmitted (as a reference, a DVD-R can hold 4.7 GB).[27] Oklahoma wireless user Billie Parks, for instance, purchased a $99 "netbook" with $60 per month AT&T broadband service at Radio Shack. She received a bill for about $5,000, mostly comprised of charges for overstepping AT&T's 5GB data cap.[28] Consider Wayne Burdick, who decided to watch the Chicago Bears play the Detroit Lions over AT&T's wireless network. He was billed $27,000 for the privilege of watching the Bears win by four points.[29]

*U.S. Lags Behind In Inexpensive Plans*

Evidence indicates that most U.S. consumers end up adopting the offer of bundled services and commensurately high monthly rates. Our magazine *Consumer Reports* found that ninety four percent of our surveyed readers have the traditional cell phone plans of post-paid service.[30] Reports have also shown that the United States trails many other countries with regard to low-

---

[26] Peha, Jon. "A Spectrum Policy Agenda," In *...And Communications For All* edited by Amit Schejter, 137-153. Lexington Books, 2009.

[27] Data gathered from AT&T Wireless website at http://www.wireless.att.com/cell-phone-service/welcome/index.jsp. Reflects pricing for BlackBerry and PDA "Personal + tethering" data plan without an individual or FamilyTalk voice plan. International per-kilobyte data charges are much higher.

[28] Martin Perez, "AT&T, Radio Shack Sued For $5,000 Netbook Bill," *Information Week*, March 2, 2009, http://www.informationweek.com/news/telecom/business/showArticle.jhtml?articleID=215600328&subSection=News [accessed June 9, 2009].

[29] Weir, Bob. "Bears fan was billed $28K to watch game." USA Today, February 23, 2009. http://www.usatoday.com/topics/post/People/Athletes/Golf/Tiger+Woods/63261805.blog/1 [accessed June 15, 2009]

[30] "How to buy a pre-paid phone." *Consumer Reports*, January 2009.

cost prepaid services. Low income Americans do not have the inexpensive non-wireline options their counterparts in other countries have.[31]

This is largely because it does not pay for the average or low-income consumer to adopt pre-paid plans. Carriers offer subsidized cell phones when you sign up for a one or two year contract. Choosing to acquire a cell phone outside the carriers' subsidized channel of distribution offers no savings to consumers. Providers offer no lower rate to consumers that bring their own phone with them and represent no subsidy burden. Rob Friedan notes, "Whether by explicit agreement or 'consciously parallel' conduct all wireless carriers have agreed not to compete for the most price sensitive consumer who would gladly give up cutting edge technologies in exchange for lower monthly service rates."[32]

**LIMITS ON CONSUMER CHOICE**

Once consumers adopt a lengthy standard contract for bundled services, they face limited options and lock-in features, which present significant barriers for consumers to vote with their feet by changing providers.

*Early termination fees*

The biggest cost to switching providers is the ubiquitous early termination fees (ETFs). ETFs are penalties levied when a consumer wishes to change or cancel the terms of their wireless agreement. Early termination penalties by wireless carriers create artificial barriers to open competition in the wireless market and present difficult choices for the consumer. These penalties do not save consumers money as the carriers claim,[33] they rob consumers of the benefits that an open and competitive market would otherwise bring.

---

[31] Frieden, Rob. "The Way Forward on Wireless." In *...And Communications For All* edited by Amit Schejter, 153-167. Lexington Books, 2009.

[32] Friedan, Rob. Professor, Penn State University. "Hold The Phone: Assesing the Rights of Wireless Handset Owners and Carriers." Jan 7 2008.

[33] Evidence was presented at trial in California (Ayyad v. Sprint, CA Superior Court, Alameda County) that one carrier's early termination fee program actually cost them more money to implement than they recovered from it. In other words, this program does not save consumers money—it costs them extra. Further, according to internal memos, the company performed one calculation and one calculation only in determining the ETF: the effect on subscriber churn. That is, they did not examine whether they fully recovered "subsidies" they offered consumers; they simply said this will make it harder for consumers to switch. Clearly, this is about penalizing consumers for voting with their feet and pocketbooks, not about saving them money.

The wireless carriers say they want a national framework, but the truth is that they already have one. The Uniform Commercial Code (UCC) provides standards for "liquidated damages clauses" in contracts that are the same in all 50 states. However, what the industry seeks is nothing more than special treatment that would exempt it from the laws that all other businesses have to follow. Generally, liquidated damages clauses *can* be used to recover actual damages, but they *cannot* be used as arbitrary penalties designed to prevent consumers from switching companies.[34] But the early termination penalties the wireless industry is charging consumers are so far and above the value[35] of subsidies provided that something else is clearly going on.

The wireless industry is quick to note that they have other costs they recoup through the ETF, namely marketing and customer acquisition costs. But should consumers really have to pay for wireless companies' advertisements? Do we really believe it is fair or legal to force a customer who is going to another carrier to pay for the cost of finding another subscriber for her old carrier? The answer is clearly no.

Indicators like customer acquisition costs (CAC) are simply a measure of the efficiency of a carrier's marketing operation, and are NOT a measure of any value being given to the consumer. Consumers should not have to pay a penalty fee related to whether the company is running effective ads or not. If Congress is to take any action to constrain or condition ETFs, it must absolutely exclude advertising and marketing expenditures from the definition of a "reasonable" fee.

---

[34] Cal. Civ. Code, Sections 1671(d) and 1670.5.

[35] $14.33 is the average phone subsidy provided to the consumer according to the best data we have seen so far on carrier subsidies. In data submitted by the wireless carriers to the International Trade Commission, the average value of wireless handsets in 2006 was $115. The wireless industry's trade association (CTIA) says that the average price paid for phones in 2006 was $65.67, and the carriers also charge a $35 activation fee that they treated as handset revenues on their books—for a total of $100.67 paid by the average consumer for their handset. That leaves us $14.33 in average upfront savings. Do consumers pay that off in their first month of service? Their second? Surely it does not take two full years. If the carriers were to reduce their ETFs to $14.33—or even triple that amount—no one would be here today asking questions. But considering these penalties (at a minimum of $175 from the two largest carriers) are more than 12 times the benefit consumers are receiving, something else is going on.

Rather than facilitating the mobility and flexibility in the use of mobile devices, ETFs lock mobile customers into long-term contracts that fail to acknowledge the speed of technological progress in the mobile device market. While these pricing structures undoubtedly benefit the wireless carrier by providing a reliable customer base for the longer term, they fail to promote competition for lower prices and improved services. Indeed, ETFs facilitate oligopoly operating structures in the wireless market, since carriers are permitted to divide customers among themselves without the threat of suddenly losing them to a competing provider.

This issue has received significant attention on Capitol Hill. In 2007, U.S. Senators Amy Klobuchar (D-Minn.) and John D. Rockefeller (D-WV) introduced a bill, entitled the Cell Phone Consumer Empowerment Act, to address the anticompetitive nature of early termination penalties. This Act would have allowed consumers to exit their mobile contracts within 30 days of signing a new agreement with a new provider, without having to pay a penalty fee. The bill would have also required ETFs to be prorated in a way that reasonably links the fee with the actual economic damages accrued by a wireless provider.[36] Consumers Union strongly supports legislative efforts like these to reign in ETFs.

*Contract extensions*

Contract extensions further exacerbate the problem of early termination. When consumers choose to alter their voice and/or data plans or purchase a new mobile device due to certain lifestyle changes, many wireless carriers have required those consumers to extend the end-date of their contracts by one or two years.[37] At times, providers have enacted hidden or opaque contract extensions without warning the consumer. Sprint, for instance, has been the target of litigation for failing to notify customers that their contracts were being extended when they added more cell phone minutes or made other small changes to their plans.[38] It should be noted that the wireless carriers have begun to change this practice. In our annual survey, *Consumer Reports* shows that consumers were less likely to list mandatory contract extensions as a top

[36] S. 2033, 110th Congress http://www.thomas.gov/cgi-bin/bdquery/z?d110:SN02033:@@@D&summ2=m& . The Senate held hearings on the legislation, but it ultimately died in committee.

[37] Though the FCC's *Thirteenth Annual Report and Analysis of Competitive Market Conditions* notes that this is not a universal practice. [para 185].

[38] Brian Bakst, "Minnesota Says Sprint Duped Customers," *Associated Press*, September 27, 2007, http://www.wirelessforums.org/alt-cellular-sprintpcs/sprint-sued-unapproved-contract-extensions-29588.html [accessed June 9, 2009].

complaint.[39] Still, mandatory contract extensions, hidden or not, are unjustified business practices established to worsen the anticompetitive nature of ETFs and should be guarded against.

*Handset exclusivity*

Handset exclusivity arrangements – contracts between device manufacturers and wireless service providers to limit devices to be offered with only one wireless service – artificially limit consumer choice, restrict device innovation, and lead to higher prices. Of the ten most popular handsets in the market in 2008, eight were shackled to various network providers under exclusive deals.[40] The result, for the consumer, is an artificial restriction on choice of service provider and on switching service providers.[41] In addition to limitations on the consumer's choice of service provider, the consumer faces artificial limitations on choice of device, because exclusivity arrangements are also a barrier to entry for new entrants in the market for wireless devices.[42]

Exclusivity arrangements impact not only consumer choice, but also market structure, as they constitute a barrier to entry for small service providers. As a direct consequence of exclusive deals between device manufactures and incumbent national service providers, small service providers cannot offer the use of popular handsets and smartphones over their networks. Thus, their services are less attractive to consumers who are driven towards the popular devices that are offered by the incumbent providers, leading to further increase in their market power. These arrangements are of particular concern with respect to the future of wireless services. The future of wireless services, and wireless Internet access services in particular, is tied to the use of smart phones, and without the ability to offer them, rural providers will not have the ability to generate

---

[39] *Consumer Reports*, Jan 2009

[40] RCR Wireless, "By the Numbers: Top Ten Most Popular U.S Handsets in November," Kristen Beckman, [January 8, 2009], http://www.rcrwireless.com/article/20090108/wireless/901079989/1081/newsletter33 [accessed: June 8, 2009].

[41] In contrast, almost 70–80% of the phones in Europe and Asia are sold independent of the wireless providers. Articlesbase, "Cheap Unlocked Cell Phones: Switch Cell Phone Providers Without Losing Your Phone," Margarita Schwartzman, [June 5, 2008], http://www.articlesbase.com/cell-phones-articles/cheap-unlocked-cell-phones-switch-cell-phone-providers-without-losing-your-phone-439210.html [accessed: June 8, 2009].

[42] For example, as Dell was considering developing a smartphone, it was faced with significant challenges, including the need to carve out an exclusivity arrangement with a carrier, to market its smartphone. The Wall Street Journal, "Dell Prepares to Dial Into Smartphone Marketplace," [January 30, 2009], http://online.wsj.com/article/SB123327385680231133.html [accessed: June 8, 2009].

enough revenues to deploy 3G networks.[43] If no action is taken, a similar anti-competitive environment will ensue for the coming 4G network markets.

Additionally, handset exclusivity arrangements give wireless service providers leverage to exert influence over handset innovations that do not meet their approval. Currently, a handset manufacturer is at the whim of the network carrier (with whom the exclusivity contract is drawn) when it introduces any new features to market its handset. For example, Nokia was forced to remove some of its features, like Wi-Fi, for the ability to market its e61 phone in the U.S. Nokia was required to eliminate these features because AT&T, the network provider, was apprehensive that consumers would take advantage of VOIP services, thereby reducing the minutes of its wireless phone services.[44] In another example, RIM (the manufacturer of Blackberry) was prohibited by AT&T from offering free mapping services to Blackberry users since AT&T wanted to offer consumers its own mapping services and charge for it.[45]

Finally, exclusive deals are not required by the structure of the wireless market – they serve as purely artificial impediments to competition and innovation. Handset exclusives are one of many ways to finance research and development. Exclusives are a question of financing. They are not necessary to innovation where demand exists. Indeed, parallels can be drawn with several other markets where handset exclusives are not needed to encourage and enhance innovation. The iBook does not need to be shackled to Comcast, Dell's laptops do not need to be exclusively available through Time Warner in order to produce innovation in the computing world. In many markets, innovation has flourished *because* the device and the network are separate. The wireless market in the U.S. is a well established market for manufacturer devices. Device manufacturers should not have to rely on exclusive arrangements with service providers to market their devices and to ensure sufficient revenues to fund the research and development of new products and services. Indeed, this is the case in other established markets, such as Asia and

---

[43] William Rogerson, "An Economic Analysis of Exclusivity Arrangements between the Big Four Wireless Carriers and Handset Manufacturers," Comments of United States Cellular Corporation, FCC Docket No. RM-11497 [February 23, 2009].

[44] Tim Wu, "Wireless Carterphone," International Journal of Communication 1, 2007, http://ssrn.com/abstract=96202 [accessed: June 8, 2009].

[45] The Wall Street Journal, "A Fight Over What you Can Do on a Cellphone," Jessica Vascellaro, [June 14, 2007], http://discussion.treocentral.com/cdma-north-america/140971-please-help-us-yourself-get-better-phones.html [accessed: June 8, 2009].

Europe. Handset manufacturers in Asia and Europe are able to sell 70-80% of the phones independent of exclusive deals with service providers.[46] Rather than representing an essential feature of the market, handset exclusivity deals are an artificial impediment to competition in the wireless market.

**PROVIDER CONDUCT IN NON-PRICING MARKET FEATURES**

While there are some markers that represent positive developments – for example we see consumer satisfaction with cellular phone services increasing[47] and consumers are increasingly relying on their mobile devices for various functions and uses – the current market structure blunts the force of consumer demand, blocks consumer access to devices, and inhibits innovation with regard to cell phones and software.

In an efficient market, consumers would be able to acquire the full use and functionality they value from devices and services. However, because the mobile device and software marketplaces are dependant on wireless spectrum to ensure their products reach consumers, they therefore are dependant on the big four national wireless carriers. Unfortunately, these carriers exert their influence by, "aggressively controlling product design and innovation in the equipment and application markets."[48] As a result, we have seen handset manufacturers impose substantial limitations on the applications that could be available on mobile phones.

For example, cell phone developers have reported carriers forcing the elimination of call timer applications, which keep track of individual calls and weekly, monthly or yearly call totals to help the consumer avoid overage charges. Fearful of independent records of consumers calling habits, wireless providers limit or prohibit this useful consumer function.[49]

When camera phones were introduced to the market, the possibility of emailing photos instantly to a friend or family member became coveted by consumers. However, in the early stages of

---

[46] Cnet News, "Will unlocked cell phones free consumers," Marguerite Reardon, [January 24, 2007], http://news.cnet.com/Will-unlocked-cell-phones-free-consumers/2100-1039_3-6152735.html [accessed: June 5, 2009].
[47] *Consumer Reports*, Jan 2009
[48] Wu, Tim. *Wireless Carterphone*. International Journal of Communication 389, 399 (2007), available at http://ssrn.com/abstract=962027.
[49] *Id.*

camera phones, device developers sought to create an function to email pictures through the phone – but, carriers shut them down, in order to funnel consumers towards a carrier-controlled, paid "photo sharing" website where consumers were forced to pay to upload a photo that they can then later download on their PC and send via email.[50]

We are particularly concerned about carrier and manufacturer attempts to limit the full force of the Internet from reaching mobile consumers. For example, the popular Skype VoIP program has been blocked by Apple from operating over AT&T's 3G network – a situation which AT&T lobbyist Jim Cicconi explained by saying, "We absolutely expect our vendors not to facilitate the services of our competitors."[51] The same treatment is given to Sling Media's SlingPlayer Mobile application, forbidding its operation over the 3G network, defending the decision solely by pointing to language in the terms of service.[52] This type of application blocking prevent the full migration of Internet services to the mobile marketplace, and allows carriers to market the Internet, while only offering the services that can be monetized. AT&T is not alone – many wireless providers have substantial limitations in the terms of service for their mobile "broadband" services.

Free speech implications have also been raised as a result of the consolidated power of wireless providers over mobile communications services. Working with carriers, several organizations have been provided SMS "short codes", which allows them to reach multiple mobile subscribers with one text message. In September 2007, Verizon Wireless refused to provision a short code to NARAL pro-choice America for NARAL's completely opt-in political alert service. Despite having allowed similar short codes for other campaigns, Verizon wrote to NARAL that it reserves the right to refuse service to, "any organization that seeks to promote an agenda or distribute content that, in its discretion, may be seen as controversial or unsavory to any of its users."[53] Although Verizon backed down and agreed to provision a short code to NARAL shortly afterwards, it preserves it's right to deny texting capability to anyone that does not share

---

[50] *Id.*
[51] USA Today, "Skype's iPhone limits irk some consumer advocates," Leslie Cauley, [February 2, 2009], http://www.usatoday.com/tech/news/2009-04-01-att-skype-iphone_N.htm [accessed: June 8, 2009].
[52] *See* Chris Riley, "AT&T's Not-So-Secret Veto over 3G SlingPlayer Mobile," *SavetheInternet.com Blog* (May 13, 2009), *at* http://www.savetheinternet.com/blog/09/05/13/att's-not-so-secret-veto-over-3g-slingplayer-mobile.
[53] Liptak, Adam. "Verizon Blocks Messages of Abortion Rights Group," *The New York Times*. 27 Sept 2007. http://www.nytimes.com/2007/09/27/us/27verizon.html [accessed June 15, 2009].

its "corporate values". The incident and reaction led to several public interest groups filing a petition for declaratory ruling, which has been before the FCC for the past 18 months.[54]

Given the degree of similarity in the usage limitations, and the absence of any major wireless carrier willing to offer a true mobile broadband or texting service without limitations, providers are not engaging in aggressive competition over non-price service features.

**SOLUTIONS AND GOVERNMENT OVERSIGHT**

We believe more oversight is needed in the consolidating wireless marketplace. This hearing and others like it is a good start. However, formal inquiries and investigations should continue to determine whether government intervention is necessary. This is an important pocket book issue for millions of Americans in tough economic times.

For example, the Government Accountability Office should study the practical impediments to consumers that attempt to switch carriers and determine what impact they have on consumer choice and on effective competition. The FCC should fix the in-market exception for voice roaming and enter into a rulemaking on data roaming and handset exclusivity to lower barriers to competition.[55]

Finally, any additional proposed mergers in the wireless market place should receive strong scrutiny by the FCC and the DOJ.

**CONCLUSION**

Effective or meaningful competition occurs when 1) the barriers to entry for new competitors in the market are low; 2) consumers have a choice of alternative providers and services in the market and the costs of switching providers do not present an undue burden; 3) innovations in technology are encouraged and lead to expansion of services and product offerings for the

[54] See Public Knowledge, et al. Petition for Declaratory Ruling, WT Docket No. 08-7, (Dec. 11, 2007). Available at http://www.publicknowledge.org/pdf/text-message-petition-20071211.pdf.

[55] Voice roaming, special access fees to the Internet, spectrum holdings and other systemic barriers to competition in the market are detailed in our attached FCC filing.

consumers; and 4) no single firm or a group of firms have the power to influence the prices of the products and services.

However, currently there are pronounced and extensive barriers to effective competition. Consumers are being locked-in to the few large market firms and competitors are being locked-out of the marketplace through limited access to spectrum; unreasonable prices, terms, and conditions for access to the on-roads of the Internet and for data roaming; unreasonable in-market exceptions for voice roaming. This lack of effective competition has led to provider conduct, such as pricing consumers into two year contracts with lock-in features, handset exclusivity and parallel pricing regimes, which harms consumers and inhibits innovation.

# ADDENDUM

## COMMENTS OF CONSUMER FEDERATION OF AMERICA, CONSUMERS UNION, FREE PRESS, MEDIA ACCESS PROJECT, NEW AMERICA FOUNDATION AND PUBLIC KNOWLEDGE

## ON

## FCC CMRS COMPETITION REPORT

**Before the**
**FEDERAL COMMUNICATIONS COMMISSION**
**WASHINGTON, DC 20554**

| | | |
|---|---|---|
| In the Matter of: | ) | |
| | ) | |
| Implementation of Section 6002(b) of the Omnibus Budget Reconciliation Act of 1993 | ) | WT Docket No. 09-66 |
| | ) | |
| Annual Report and Analysis of Competitive Market Conditions With Respect to Commercial Mobile Services | ) | |

**COMMENTS OF**
**CONSUMER FEDERATION OF AMERICA, CONSUMERS UNION, FREE PRESS, MEDIA ACCESS PROJECT, NEW AMERICA FOUNDATION, AND PUBLIC KNOWLEDGE**

Mark Cooper
Consumer Federation of America

Parul P. Desai
Andrew Jay Schwartzman
Media Access Project

Joel Kelsey
Consumers Union

Michael Calabrese
New America Foundation

Ben Scott
Free Press

Harold Feld
Gigi Sohn
Public Knowledge

June 15, 2009



56833.053

## SUMMARY

A proper analysis of the CMRS market in the United States will indicate that the market demonstrates an absence of effective competition; is likely to become less competitive; and produces active and ongoing consumer harms as a result of insufficient competition – harms that can be remedied, at least in part, through Commission action to promote competition. The Commission should evaluate competition in its upcoming *Fourteenth Report* through the framework of market structure, provider conduct, consumer behavior (or consumer choice), and market performance – but the Commission should consider a broader range of factors in each aspect of this framework, reflecting long accepted economic literature.

The Commission should interpret the concept of "effective competition" through the lens of the user at every opportunity, and should examine all obstacles to consumer choice and innovation, the removal of which ought to be the ultimate end goals of promoting competition. Following such an examination, the Commission cannot but find that the current market structure has resulted in fewer choices for consumers in pricing models, services, applications, and devices. Ongoing restrictions to competition have also limited innovation, particularly in the ancillary device market, and have discouraged investment to improve the quality of wireless networks. The Commission must recognize and address the failures of the current CMRS market by intervening to limit barriers to entry, consumer choice, and innovation.



VerDate Nov 24 2008 11:47 Jun 28, 2010 Jkt 056833 PO 00000 Frm 00085 Fmt 6633 Sfmt 6633 S:\GPO\HEARINGS\56833.TXT SJUD1 PsN: CMORC

56833.054

## TABLE OF CONTENTS

I. INTRODUCTION ..... 1
II. THE CMRS MARKET IS NOT COMPETITIVE ..... 3
A. Structural Competition in the *Thirteenth Report* is Not Sufficient. ..... 3
B. A Better Definition of Market Structure Would Reveal Even Less Competition. ..... 4
C. Provider Conduct in Pricing Indicates an Absence of Effective Competition ..... 6
D. Provider Conduct in Non-Pricing Aspects Also Reflects Insufficient Competition ..... 10
E. Limits On Consumer Choice Reflect Insufficient Competition. ..... 12
F. Market Performance Would Reflect Insufficient Competition ..... 16
G. Considering More Fine-Grained Factors Would Reflect Insufficient Competition. ..... 17
III. THE CMRS MARKET RESTRICTS ENTRY AND GROWTH. ..... 18
A. Spectrum Reform Is a Critical Requirement For a Vibrant Wireless Market ..... 19
B. Special Access Reform Is Essential. ..... 21
C. Consolidation Has Harmed Growth and Access for New Entrants. ..... 23
D. Loopholes In Roaming Regulations Limit New Entrants And Growth ..... 25
IV. CONCLUSION ..... 27



VerDate Nov 24 2008 11:47 Jun 28, 2010 Jkt 056833 PO 00000 Frm 00086 Fmt 6633 Sfmt 6633 S:\GPO\HEARINGS\56833.TXT SJUD1 PsN: CMORC

56833.055

**Before the**
**FEDERAL COMMUNICATIONS COMMISSION**
**WASHINGTON, DC 20554**

| | | |
|---|---|---|
| In the Matter of: | ) | |
| | ) | |
| Implementation of Section 6002(b) of the Omnibus Budget Reconciliation Act of 1993 | ) | WT Docket No. 09-66 |
| | ) | |
| Annual Report and Analysis of Competitive Market Conditions With Respect to Commercial Mobile Services | ) | |

**COMMENTS OF**
**CONSUMER FEDERATION OF AMERICA, CONSUMERS UNION, FREE PRESS, MEDIA ACCESS PROJECT, NEW AMERICA FOUNDATION, AND PUBLIC KNOWLEDGE**

The Consumer Federation of America, Consumers Union, Free Press, Media Access Project, the New America Foundation, and Public Knowledge ("Commenters") respectfully submit these comments in response to the *Public Notice* of the Federal Communications Commission ("Commission") seeking input on the state of competition in the Commercial Mobile Radio Service ("CMRS") market for the Commission's upcoming *Fourteenth Report*.

## I. INTRODUCTION

The wireless industry has continued to grow over the years, with mobile phones becoming a pervasive presence in the lives of Americans. It is estimated that more than 270 million mobile phones are in use in the U.S.[1] Consumers use their mobile devices more and more – for mobile voice, data, and Internet access. Mobile broadband is expected to ultimately

[1] *See* Testimony of Chris Murray, Senior Counsel, Consumers Union regarding "Competition in the Wireless Industry" before the U.S. House of Representatives Subcommittee on Communications, Technology, and the Internet, Committee on Energy and Commerce, 2 (May 7, 2008).



56833.056

reach 30-35% of the total user base.[2] Wireless services have undoubtedly grown – but growth should not be mistook for effective competition. In fact, while the mobile market continues to grow, it continues to grow less and less competitive, because the current wireless market and regulatory structures inhibit competition, consumer choice, and innovation.

The Commission's *Thirteenth Report* evaluated only a narrow range of the factors required for a proper determination of effective competition. Based on a shallow analysis of a limited subset of market factors, examining a too-broadly defined market, and ignoring the majority of practical impediments to competition and the clearest signs of market problems, the *Thirteenth Report* concluded that the CMRS market was competitive. A more thorough analysis using the criteria and the data from the *Thirteenth Report* would reveal the severe problems with competition in the wireless market. An accurate analysis – incorporating a proper determination of the relevant market, a focus on the consumer and limits to consumer choice, and consideration of the fine-grained factors used in industrial economics to evaluate workable competition in markets – would present an even more dire, and even more accurate picture.

There is little reason to believe the current market and regulatory structure will support or promote more competition in the future. Effective competition in the wireless market requires, among other things, minimal barriers to entry and growth for competitors, maximal consumer choice, and an absence of explicit barriers to innovation – all features not present in the wireless market. There are pronounced and extensive barriers to effective competition in the modern CMRS market, including limited access to spectrum; unreasonable prices, terms, and conditions for special access; and horizontal concentration in both the wireless and wireline markets. This lack of effective competition has led to provider conduct including handset exclusivity

[2] *See* McKinsey & Company, *Perspectives on the Evolution of the U.S. Wireless Industry* 15 (2009).



VerDate Nov 24 2008 11:47 Jun 28, 2010 Jkt 056833 PO 00000 Frm 00088 Fmt 6633 Sfmt 6633 S:\GPO\HEARINGS\56833.TXT SJUD1 PsN: CMORC

56833.057

arrangements and parallel pricing regimes that harm consumers, inhibit innovation, and further limit competition. The Commission must acknowledge the failures of the current regulatory structure to bring about meaningful competition, and should take the necessary actions to revive and expand competition going forward.

## II. THE CMRS MARKET IS NOT COMPETITIVE.

### A. Structural Competition in the *Thirteenth Report* is Not Sufficient.

Contrary to the conclusions of the *Thirteenth Report*, a weighted national average HHI of 2674 is not a high level of competition. Under general antitrust analysis, HHI levels above 1800 are considered "highly concentrated."[3] Commenters expect the national average HHI to be even higher for the 2008 data to be used in the *Fourteenth Report* – the introduction of the 3G iPhone and the importance of mobile broadband as a growth driver, particularly in a weak economy, will likely result in large carriers with popular devices attracting a disproportionate share of new and switching customers. But even if HHI levels have not increased, any HHI level above 1800 in any individual economic area ("EA") indicates severely limited competition under traditional analyses. Of the 171 EAs reported in the *Thirteenth Report*, exactly one had an HHI under 1800 – and barely, at 1795.[4] Colloquially, if "four is few" and "six is many," the gold standard for "many competitors" is 6 equal-sized competitors, or an HHI of 1667 – which no EA comes near.

---

[3] Department of Justice and Federal Trade Commission, *Merger Guidelines,* 1997, Section 1.5; *see also* Neil B. Cohen and Charles A. Sullivan, *The Herfindahl-Hirschman Index and the New Antitrust Merger Guidelines: Concentrating on Concentration*, 62 Tex. L. Rev. 453, 461 (1983).
[4] *See Implementation of Section 6002(b) of the Omnibus Budget Reconciliation Act of 1993, Annual Report and Analysis of Competitive Market Conditions with Respect to Commercial Mobile Services*, *Thirteenth Report*, 23 FCC Rcd 2241 at Table A-3 (2008) ("*Thirteenth Report*").



VerDate Nov 24 2008 11:47 Jun 28, 2010 Jkt 056833 PO 00000 Frm 00089 Fmt 6633 Sfmt 6633 S:\GPO\HEARINGS\56833.TXT SJUD1 PsN: CMORC

56833.058

A deeper examination of the EA data in the *Thirteenth Report* paints a bleaker position than even the high average HHI of 2674 indicates. Economies of scale should indicate a pattern across the EAs under which urban areas have more competitors and lower HHI than rural areas because competitors have more to gain from competing aggressively in those markets – but instead, according to 2007 data, both the most and least competitive regions are the most rural, demonstrating distortions compared to what would be expected from a competitive environment.[5] Furthermore, many EAs demonstrate substantially higher than average HHIs, ranging from the 4000s into the low 6000s, and in an unobstructed, competitive market, the potential benefit of market growth in these areas at least (if not others) would be sufficient to encourage additional investment and new entrants.

**B. A Better Definition of the Market Would Reveal Even Less Competition.**

Although the *Thirteenth Report* properly separated mobile services from other non-substitutable services, such as Wireless Local Area Network services, the *Report* nevertheless found it reasonable to analyze mobile voice and mobile broadband together, based in part because these services are often advertised and bundled together.[6] The *Report* also explains the joint analysis, in part, on the lack of better data.[7] But, combining these markets obscures competitive problems arising from greater concentration in mobile broadband services than

[5] Although population numbers in an arbitrary region are not an exact match for population density, the EAs used in the *Thirteenth Report* center around metropolitan areas, and thus large areas are indeed generally also dense areas.
[6] *See Thirteenth Report* at paras. 7, 34.
[7] *See id.* at para. 33 ("However, the numbering data provide an estimate of mobile telephone subscribers in general, without regard to whether subscribers use mobile broadband and other data services as well as mobile voice services. As a result, the data do not provide a way of distinguishing mobile telephone subscribers who still use their handsets primarily or exclusively for voice calls from those who also subscribe to, and actively use, mobile data services, or the smaller subset of subscribers who have already migrated to mobile broadband networks and devices.").



VerDate Nov 24 2008 11:47 Jun 28, 2010 Jkt 056833 PO 00000 Frm 00090 Fmt 6633 Sfmt 6633 S:\GPO\HEARINGS\56833.TXT SJUD1 PsN: CMORC

56833.059

mobile voice services. Mobile broadband services, and the advanced wireless handsets capable of using them to full extent, are disproportionately available to large incumbent carriers, because of the market "features" of handset exclusivity arrangements for smart phones, excessive backhaul rates for broadband traffic, disproportionate holdings of spectrum efficient for mobile broadband usage, and other impediments to mobile broadband service offerings by competitors.[8] Furthermore, growth in the wireless market as a whole is driven by growth in mobile broadband services, particularly in a rough economy.[9] Therefore, any limits on competition in the mobile broadband market are particularly significant, and have ancillary impact on the ability of providers to compete in the mobile voice market. The Commission must therefore analyze mobile broadband data separately in the *Fourteenth Report*.

In the *Thirteenth Report* and past reports, the Commission's primary consideration for determining whether to treat two products as being in the same market is ostensibly consumer-focused – whether consumers view the products to be substitutes.[10] From the perspective of the consumer, mobile data services that do not allow the consumer to connect to the Internet – such as Verizon's V Cast Mobile TV service – do not serve as substitutes for true mobile Internet access services.[11] In the *Thirteenth Report*, the Commission treated the growth in mobile

---

[8] *See infra* Sections II(E)(3) and III.

[9] Om Malik, "Downturn or Not, Mobile Broadband is Growing Fast," *GigaOm* (March 17, 2009), *at* http://gigaom.com/2009/03/17/downturn-or-not-mobile-broadband-is-growing-fast/. *See also* AT&T, "AT&T Investor Update," at p. 7, April 22, 2009, *at* http://www.att.com/Investor/ Financial/Earning_Info/docs/1Q_09_slide_c.pdf.

[10] *See Thirteenth Report* at para. 32.

[11] The Commission recognized this in their proceeding on broadband data collection. "When counting such subscribers, we direct providers to exclude subscribers whose choice of content is restricted to only customized-for-mobile content,86and to exclude subscribers whose subscription does not include, either in a bundle or as a feature added to a voice subscription, a data plan providing the ability to transfer, on a monthly basis, either a specified or an unlimited amount of data to and from Internet sites of the subscriber's choice." *Development of Nationwide Broadband Data to Evaluate Reasonable and Timely Deployment of Advanced*



VerDate Nov 24 2008 11:47 Jun 28, 2010 Jkt 056833 PO 00000 Frm 00091 Fmt 6633 Sfmt 6633 S:\GPO\HEARINGS\56833.TXT SJUD1 PsN: CMORC

56833.060

Internet access services and in other, non-Internet, mobile data services to be an indicator of growth in the broader wireless market[12] – a true statement, but one with little bearing on the current state or future of competition in the separate markets for mobile voice services, mobile data services, and mobile Internet access services. We urge the Commission to treat these services more distinctly in the *Fourteenth Report*. A deeper evaluation of these services will indicate a higher degree of concentration and more obstacles to competition among providers of mobile data and mobile Internet access services as compared to mobile voice services.

**C. Provider Conduct in Pricing Indicates an Absence of Effective Competition.**

The *Thirteenth Report* evaluated provider conduct primarily through traditional metrics such as price rivalry, capital expenditures, advertising expenditures, and investment.[13] By examining price and non-price rivalry at only the most general levels, and often in language more reminiscent of advertising literature than critical analysis, the *Thirteenth Report* failed to identify any specific instances of provider conduct reflecting insufficient competition. Commenters urge the Commission to take a more detailed look at provider conduct in the *Fourteenth Report*.

Significant consolidation and lack of effective federal oversight of the wireless industry have greatly diminished price competition in the CMRS market. In a variety of ways, the four national wireless carriers – AT&T, Verizon, Sprint, and T-Mobile – have priced their services in parallel, potentially generating a substantial increase in prices. U.S. consumers paid an average of $506 per year for wireless service in 2007, much more than users in most other developed

---

*Services to All Americans, Improvement of Wireless Broadband Subscribership Data, and Development of Data on Interconnected Voice over Internet Protocol (VoIP) Subscribership*, WC Docket No. 07-38, Notice of Proposed Rulemaking, 22 FCC Rcd 7760, 7772 at para. 23 (2008).

[12] *See Thirteenth Report* at paras. 164-167.

[13] *See id.* at paras. 110-176.



VerDate Nov 24 2008 11:47 Jun 28, 2010 Jkt 056833 PO 00000 Frm 00092 Fmt 6633 Sfmt 6633 S:\GPO\HEARINGS\56833.TXT SJUD1 PsN: CMORC

56833.061

nations.[14] In particular, substantially parallel (and substantially above-cost) text message prices and mobile broadband usage prices reflect a stark failure of competition over price in wireless services.

*1. Voice Plans*

Monthly voice plan options provided by the four largest carriers do not reflect the variable lifestyles of the American consumer. Instead, these plans offer little flexibility and consumer choice. Most CMRS providers' monthly plans offer a minimum of 200-450 minutes for $29.99-$39.99 per month, and offer a prepaid or "pay-as-you-go" service for customers who choose not to purchase a monthly plan. Pay-as-you go services range in cost from 10 cents to 20 cents per minute, depending on the provider – a high price even in comparison to international calling card rates. While carriers will claim that these plans comprise a broad range of options for the consumer, these limited choices effectively force the majority of consumers to pay more per month to purchase more minutes than they need, and reveal weak price rivalry.

Further, CMRS providers have failed to take advantage of economies of scale despite a recent boom in the volume of mobile subscribers, demonstrating a classic example of market power and anticompetitive behavior. U.S. wireless subscribers have nearly tripled between 2000 and 2008, topping 270 million, or 87 percent of the population, in December of last year.[15] Wireless provider earnings reflect this massive subscriber growth. Annualized total wireless revenues for the CMRS industry amounted to over $148 billion in 2008, up from around $45

[14] *See* Organization for Economic Co-Operation and Development, *OECD Communications Outlook 2007*, 6 (2007). The OECD average is $439 per year.

[15] U.S. cell phone subscribers amounted to about 207 million in 2005, about 109 million in 2000, and about 33 million in 1995. *See* CTIA, "Wireless Quick Facts: Year End Figures," *at* http://www.ctia.org/media/industry_info/index.cfm/AID/10323.



VerDate Nov 24 2008 11:47 Jun 28, 2010 Jkt 056833 PO 00000 Frm 00093 Fmt 6633 Sfmt 6633 S:\GPO\HEARINGS\56833.TXT SJUD1 PsN: CMORC

56833.082

billion in 2000 and $19 billion in 1995.[16] Yet, pricing plans remain largely parallel, and monthly plan and pay-as-you-go options remain costly for customers looking for economical solutions.

*2. Data plans*

As wireless data usage has increased in recent years, more wireless voice service providers have begun to offer data services alongside voice service. But the prices charged for these services seem far removed from any possible cost, indicating supracompetitive profits and a stark absence of provider rivalry over data prices. Usage charges over minimal initial allowances can easily bump a consumer's bill by several thousand dollars. AT&T's $65 per month plan, for instance, includes 5GB of data service, with an overage charge of $0.00048 for each additional *kilobyte*, adding up to a whopping $480 for every extra gigabyte of data transmitted.[17] Oklahoma wireless user Billie Parks, for instance, received a bill for about $5,000, mostly comprised of charges for overstepping AT&T's 5GB data cap.[18]

*3. SMS fees*

CMRS carriers have adopted parallel, and increasing, pricing structures to maintain high text messaging, or SMS, rates. Since 2005, rates to send and receive individual text messages on the networks of all four major carrier networks have simultaneously doubled from 10 cents to 20 cents per message.[19] In 2003, T-Mobile charged as little as 5 cents per message to customers

---

[16] *See id.*

[17] *See generally* "Cell Phones and Cell Phone Plans," AT&T Wireless, *at* http://www.wireless.att.com/cell-phone-service/welcome/index.jsp. These rates reflect pricing for BlackBerry and PDA "Personal + tethering" data plan without an individual or FamilyTalk voice plan. International per-kilobyte data charges are much higher.

[18] *See* Martin Perez, "AT&T, Radio Shack Sued For $5,000 Netbook Bill," *Information Week* (March 2, 2009), *at* http://www.informationweek.com/news/telecom/business/showArticle.jhtml?articleID=215600328&subSection=News.

[19] *See* Marguerite Reardon, "The Rising Cost of Texting," *CNet News* (July 1, 2008), *at* http://news.cnet.com/8301-10784_3-9982251-7.html.



VerDate Nov 24 2008 11:47 Jun 28, 2010 Jkt 056833 PO 00000 Frm 00094 Fmt 6633 Sfmt 6633 S:\GPO\HEARINGS\56833.TXT SJUD1 PsN: CMORC

56833.063

who did not sign up for a monthly text messaging plan.[20] When questioned about the apparent abuses of market power,[21] the providers noted their monthly SMS plans, which can charge users as little as 1 cent for a single message, or provide unlimited messaging for a flat fee. However, the carriers neglected to explain why the price of *individual* text messages, for customers who choose not to buy a monthly plan, have increased. They failed to also address why all four companies raised the prices for individual messages by equal amounts at largely identical times. In other words, they failed to acknowledge concerns about the potentially anticompetitive nature of their pricing practices for individual SMS messages.[22]

Price increases for text message services reflect a failure of competition, because they do not align with increasing costs but only increasing profits. The cost a carrier incurs by transmitting an SMS message has not increased in recent years. Text messaging files are very small, and the price of their transmission is negligible for the provider. An SMS message travels as a wireless signal from the handset, through the wired telephone network, and as a wireless signal to the receiving handset. The text message is a free rider inside a so-called "control channel," or space that is already being used to operate the wireless network. In other words, a text message does not use up any extra spectrum once the carrier pays the cost of the underlying infrastructure and storage equipment. Thus, any revenue received by the provider on

---

[20] *See* Kristin Dizon, "Text Messaging Makes Cell Phones Even Hotter Among Kids," *Seattle Post-Intelligencer* (September 30, 2003), http://www.seattlepi.com/lifestyle/141809_texting30.html.

[21] *See* Letter from Senator Herb Kohl, Chairman of Subcommittee on Antitrust, Competition Policy, and Consumer Rights, to Verizon Wireless, AT&T, Sprint, and T-Mobile (Sept. 9, 2008), *available at* http://kohl.senate.gov/LT%20-%20cell%20ph%20CV.pdf.

[22] *See generally* Letter from AT&T to Herb Kohl, Chairman of Subcommittee on Antitrust, Competition Policy, and Consumer Rights ("Chairman Kohl") (October 6, 2008); Letter from Sprint to Chairman Kohl (October 6, 2008); Letter from T-Mobile to Chairman Kohl (October 3, 2008).



VerDate Nov 24 2008 11:47 Jun 28, 2010 Jkt 056833 PO 00000 Frm 00095 Fmt 6633 Sfmt 6633 S:\GPO\HEARINGS\56833.TXT SJUD1 PsN: CMORC

56833.064

incremental text message usage is nearly pure profit.[23] To put these profits in perspective: considering how little data is transferred in an SMS message, at 20 cents per message, consumers pay the equivalent of almost $1,500 per megabyte of data transferred, a rate over seventeen times more expensive than receiving data from the Hubble Space Telescope.[24] Streaming a single typical song at SMS data rates would cost a consumer more than $5,000.[25] The failure to compete by maintaining or lowering text message prices to reflect cost therefore should be considered by the Commission in the *Fourteenth Report*'s evaluation of provider conduct.

**D. Provider Conduct in Non-Pricing Aspects Also Reflects Insufficient Competition.**

The *Thirteenth Report* spent considerable time discussing new "app stores" and similar new functionality offered by carriers, and pointed to these features as indicative of provider competition. The Commission is right to consider innovation as a sign of market competition. However, in 2008, the continued evolution of these offerings reflect substantial limitations on innovation and on competition, demonstrated by ongoing limitations imposed by the wireless carriers on the development of applications for wireless devices and wireless Internet access services – limitations that are undesired by users of the networks, reflecting insufficient competition and high switching costs, and limitations that serve no clear purpose other than to limit competition even further.

In an efficient market, consumers would be able to acquire the full use and functionality they value from their services. But mobile Internet access service providers continue to impose

[23] *See* Randall Stross, *What Carriers Aren't Eager to Tell You About Texting*, The NEW YORK TIMES (December 28, 2008).
[24] *See* Gabriel Gache, "Space Science Data Transmission Four Times Cheaper than SMS," *Softpedia* (May 12, 2008), *at* http://news.softpedia.com/news/Space-Science-Data-Transmission-Four-Times-Cheaper-than-SMS-85381.shtml (identifying that at 5 cents per message, SMS data transfers are 4.4 times more expensive than data transfer to and from the Hubble telescope).
[25] Assuming an MP3 file size of 3.5 MB, typical for a 3.5 minute song.



VerDate Nov 24 2008 11:47 Jun 28, 2010 Jkt 056833 PO 00000 Frm 00096 Fmt 6633 Sfmt 6633 S:\GPO\HEARINGS\56833.TXT SJUD1 PsN: CMORC

56833.065

substantial limitations on the applications available through the store and the uses of the Internet access service. For example, the popular Skype VoIP program is not permitted to operate over AT&T's 3G network – a situation which AT&T lobbyist Jim Cicconi explained by saying "We absolutely expect our vendors not to facilitate the services of our competitors."[26] AT&T gave the same treatment to Sling Media's SlingPlayer Mobile application, forbidding its operation over the 3G network, defending the decision solely by pointing to language in the terms of service.[27] Finally and most recently, the debut of Apple's iPhone 3G-S was awaited anxiously by fans, who were subsequently disappointed to learn that AT&T did not permit the operation of several of its features.[28]

But AT&T is not alone – all four major nationwide wireless carriers have substantial limitations in the terms of service for their mobile broadband services. Given the degree of similarity in the usage limitations, and the absence of any major wireless carrier willing to offer a mobile broadband service without limitations (despite the insistence of some that the network would support all uses), providers are certainly not engaging in aggressive competition over non-price service features.

In the *Fourteenth Report*, the Commission should consider limitations on usage as provider conduct indicating a lack of effective competition. These limitations on usage should especially be considered where they are adopted in parallel and ostensibly without a basis in limitations in the network.

---

[26] *See* Leslie Cauley, "Skype's iPhone limits irk some consumer advocates," *USA Today* (February 2, 2009), *at* http://www.usatoday.com/tech/news/2009-04-01-att-skype-iphone_N.htm.
[27] *See* Chris Riley, "AT&T's Not-So-Secret Veto over 3G SlingPlayer Mobile," *SavetheInternet.com Blog* (May 13, 2009), *at* http://www.savetheinternet.com/blog/09/05/13/att's-not-so-secret-veto-over-3g-slingplayer-mobile.
[28] *See* Kevin Kelleher, "Why Does my iPhone Suck?" *Reuters* (June 12, 2009), *available at* http://www.reuters.com/article/bigMoney/idUS337036694420090612.



VerDate Nov 24 2008 11:47 Jun 28, 2010 Jkt 056833 PO 00000 Frm 00097 Fmt 6633 Sfmt 6633 S:\GPO\HEARINGS\56833.TXT SJUD1 PsN: CMORC

56833.086

**E. Limits On Consumer Choice Reflect Insufficient Competition.**

Thanks to lengthy standard contracts, high early termination fees ("ETFs"), and complete barriers to consumer choice of wireless devices, consumers face substantial obstacles in choosing and switching providers. In the *Thirteenth Report*, in its section on "consumer behavior," the Commission essentially ignored these obstacles, and spent a scant ten paragraphs on all of the barriers to user switching of service providers.[29] The benefits of local number portability for switching were praised for three full paragraphs, but only one was spent on ETFs, and the Commission discussed the benefits of long-term contracts and minimized the consumer harm of the practice.[30] Handset exclusivity and other practical obstacles to switching went unmentioned. In the *Fourteenth Report*, the Commission must take more seriously these practical impediments to consumer switching, to determine the impact that they have on consumer choice and on effective competition.

*1. Early termination fees*

Early termination fees are penalties levied when a consumer wishes to change or cancel the terms of their wireless agreement. Early termination penalties by CMRS carriers create artificial barriers to open competition in the wireless market and present difficult choices for the consumer. Rather than facilitating the mobility and flexibility that most consumers rightfully expect from the use of mobile devices, ETFs lock mobile customers into long-term contracts that fail to acknowledge the speed of technological progress in the mobile device market. While these pricing structures undoubtedly benefit the wireless carrier by providing a reliable customer base for the longer term, they fail to promote competition for lower prices and improved services. Indeed, ETFs facilitate oligopoly operating structures in the wireless market, since

[29] *Thirteenth Report* at paras. 177-186.
[30] *Id.* at 185.



VerDate Nov 24 2008 11:47 Jun 28, 2010 Jkt 056833 PO 00000 Frm 00098 Fmt 6633 Sfmt 6633 S:\GPO\HEARINGS\56833.TXT SJUD1 PsN: CMORC

56833.067

carriers are permitted to divide customers among themselves without the threat of suddenly losing them to a competing CMRS provider.

*2. Contract extensions*

Contract extensions further exacerbate the problem of early termination. When consumers choose to alter their voice and/or data plans or purchase a new mobile device due to certain lifestyle changes, many CMRS carriers require those consumers to extend the end-date of their contracts by one or two years.[31] At times, providers have enacted hidden or opaque contract extensions without warning the consumer.[32] Sprint, for instance, has been the target of litigation for failing to notify customers that their contracts were being extended when they added more cell phone minutes or made other small changes to their plans.[33]

Contract extensions, hidden or not, are unjustified business practices established to worsen the anticompetitive nature of ETFs. Moreover, contract extinctions further legitimate the use of early termination penalties, and force customers to stay with one provider.

*3. Handset exclusivity*

Handset exclusivity arrangements – contracts between device manufacturers and wireless service providers to limit devices to be offered with only one wireless service – artificially limit consumer choice, restrict device innovation, and lead to higher prices. Of the ten most popular handsets in the market in 2008, eight were tied to various network providers under exclusive

[31] Though the *Thirteenth Report* notes that this is not a universal practice. *See id.*
[32] Providers also charge a fee to *upgrade* your handset. *See, e.g.*, "T-mobile Reinstates Useless $18 Handset Upgrade Fee," *Consumerist* (April 26, 2009), http://consumerist.com/5228100/t+mobile-reinstates-useless-18-handset-upgrade-fee.
[33] *See* Brian Bakst, "Minnesota Says Sprint Duped Customers," *Associated Press* (September 27, 2007), *available at* http://www.wirelessforums.org/alt-cellular-sprintpcs/sprint-sued-unapproved-contract-extensions-29588.html.



VerDate Nov 24 2008 11:47 Jun 28, 2010 Jkt 056833 PO 00000 Frm 00099 Fmt 6633 Sfmt 6633 S:\GPO\HEARINGS\56833.TXT SJUD1 PsN: CMORC

56833.088

deals.[34] For the consumer, the result is an artificial restriction on choice of service provider and on switching service providers.[35] In addition to limitations on the consumer's choice of service provider, the consumer faces artificial limitations on a choice of device, because exclusivity arrangements are also a barrier to entry for new entrants in the market for wireless devices.[36] The continued operation of handset exclusivity arrangements in the CMRS market, and their impact on consumers and consumer choice, should be recognized in the *Fourteenth Report* as an indication of ineffective competition.

Exclusivity arrangements impact not only consumer choice, but also market structure, as they constitute a barrier to entry for small service providers. As a direct consequence of exclusive deals between device manufactures and incumbent national service providers, small service providers cannot offer the use of popular handsets and smartphones over their networks. Thus, their services are less attractive to consumers who are driven towards the popular devices that are offered by the incumbent providers, leading to further increase in their market power. These arrangements are of particular concern with respect to the future of wireless services. The future of wireless services, broadband access, and wireless Internet access services in particular,

[34] *See* Kristen Beckman, "By the Numbers: Top Ten Most Popular U.S Handsets in November," RCR Wireless (January, 8, 2009) *available at* http://www.rcrwireless.com/article/20090108/wireless/901079989/1081/newsletter33.

[35] In contrast, almost 70–80% of the phones in Europe and Asia are sold independent of the wireless providers. *See, e.g.*, Margarita Schwartzman, "Cheap Unlocked Cell Phones: Switch Cell Phone Providers Without Losing Your Phone," *Articlesbase* (June 5, 2008), *at* http://www.articlesbase.com/cell-phones-articles/cheap-unlocked-cell-phones-switch-cell-phone-providers-without-losing-your-phone-439210.html.

[36] For example, as Dell was considering developing a smartphone, it was faced with significant challenges, including the need to carve out an exclusivity arrangement with a carrier, to market its smartphone. *See* Justin Scheck, "Dell Prepares to Dial Into Smartphone Marketplace," *The Wall Street Journal* (January 30, 2009), *available at* http://online.wsj.com/article/SB123327385680231133.html.



VerDate Nov 24 2008 11:47 Jun 28, 2010 Jkt 056833 PO 00000 Frm 00100 Fmt 6633 Sfmt 6633 S:\GPO\HEARINGS\56833.TXT SJUD1 PsN: CMORC

56833.089

are tied to the use of smart phones,[37] and without the ability to offer them, rural providers will not have the ability to generate enough revenues to deploy 3G networks.[38] Thus, if no action is taken, a similar anti-competitive environment will ensue for the coming 4G network markets.

Additionally, handset exclusivity arrangements give wireless service providers leverage to exert influence over handset innovations that do not meet their approval. Currently, a handset manufacturer is at the whim of the network carrier (with whom the exclusivity contract is drawn) when it introduces new features to market its handset. For example, Nokia was forced to remove some of its features, like Wi-Fi, for the ability to market its e61 phone in the U.S. Nokia was required to eliminate these features because AT&T, the network provider, was apprehensive that consumers would take advantage of VOIP services, thereby reducing the minutes of its wireless phone services.[39] In another example, RIM (the manufacturer of Blackberry) was prohibited by AT&T from offering free mapping services to Blackberry users since AT&T wanted to offer consumers its own mapping services for a fee.[40] Also, AT&T has blocked, disabled, or mutated various other features such as Bluetooth technology, SIM card mobility, direct sound and photo fie transfer capabilities, GPS services, and call timers (*i.e.*, to keep track of minutes used).[41]

Exclusive deals are not required by the structure of the CMRS market, and instead serve as artificial impediments to competition and innovation. The CMRS market in the U.S. is an

---

[37] *See, e.g.*, Richard Wray, "Mobile phone firms bank on smartphones to bail out the industry," *The Guardian* (Feb. 14, 2009), *at* http://www.guardian.co.uk/business/2009/feb/15/mobile-world-congress-report-fewer-delegates.
[38] *See* Reply Comments of United States Cellular Corporation, Attachment, William P. Rogerson, *An Economic Analysis of Exclusivity Arrangements between the Big Four Wireless Carriers and Handset Manufacturers* at 3 n.5, Docket No. RM-11497 (February 23, 2009).
[39] *See* Tim Wu, *Wireless Carterphone*, 1 INTERNATIONAL JOURNAL OF COMMUNICATION 389 (2007), *available at* http://papers.ssrn.com/sol3/papers.cfm?abstract_id=962027.
[40] *See* Jessica Vascellaro, "A Fight Over What you Can Do on a Cellphone," *The Wall Street Journal* at A1 (June 14, 2007).
[41] *See id.*



VerDate Nov 24 2008 11:47 Jun 28, 2010 Jkt 056833 PO 00000 Frm 00101 Fmt 6633 Sfmt 6633 S:\GPO\HEARINGS\56833.TXT SJUD1 PsN: CMORC

56833.070

established market for devices. In an established market, device manufacturers do not have to rely on exclusive arrangements with service providers to market their devices or to ensure sufficient revenues to fund the research and development of new products and services. Indeed, this is the case in other established markets, such as Asia and Europe. Handset manufacturers in Asia and Europe are able to sell 70-80% of devices independent of exclusive deals with service providers.[42] Thus, rather than representing an essential feature of the market, handset exclusivity deals are an artificial impediment to competition in the CMRS market.

The market power that U.S. carriers enjoy through the sale of mobile devices not only exacerbates the effects of consolidation in the wireless industry; it also facilitates the provider's leverage to operate via anticompetitive practices, such as the use of handset exclusivity and early termination fees. Under the U.S. wireless market framework, if consumers wish to forgo the high cost of purchasing a cellular phone at full price and using a prepaid cellular plan, they are required to sign a contract with the provider for 1-2 years. In exchange, providers offer to subsidize the price of a new mobile device, thus justifying the use of those contracts so that the consumer can "pay off" the cost of the subsidized phone. Lack of regulation to diversify the sales of mobile devices has thus facilitated the anticompetitive behaviors discussed above, including handset exclusivity and the use of ETFs by CMRS carriers.

**F. Market Performance Would Reflect Insufficient Competition.**

The *Thirteenth Report* focused its analysis of market performance on average revenue per unit, or ARPU, reporting that ARPU for voice services decreased but was balanced out by

[42] *See* Marguerite Reardon, "Will unlocked cell phones free consumers," *CNet News* (January 24, 2007), *available at* http://news.cnet.com/Will-unlocked-cell-phones-free-consumers/2100-1039_36152735.html.



VerDate Nov 24 2008 11:47 Jun 28, 2010 Jkt 056833 PO 00000 Frm 00102 Fmt 6633 Sfmt 6633 S:\GPO\HEARINGS\56833.TXT SJUD1 PsN: CMORC

56833.071

increases in ARPU for data services.[43] The *Thirteenth Report* also considered network quality and minutes of use, among other factors. Although these factors can indicate a healthy industry and a valuable product for consumers, they fail to demonstrate effective competition. Substantial increasing profits can be generated in an insufficiently competitive industry, while still delivering a desirable product at reduced prices, by failing to lower prices at a rate that matches ever-decreasing costs.

To remedy this, the *Notice* proposes that the *Fourteenth Report* use the profitability of CMRS providers, in part, to determine market performance.[44] Commenters strongly support such an approach. Evaluating provider profitability accurately identifies the level of aggressive competition in an industry, because in an effectively competitive market, if any incumbent provider is generating supracompetitive profits, a new entrant will develop to undercut the incumbent and get a piece of the pie. In the contrapositive, if incumbent providers generate "abnormal profits" and new entrants do not develop, then the market does not demonstrate effective competition. Commenters also support the continued tracking of minutes of use and network quality for voice services, as both indicate market performance from the consumer's perspective. Similarly, the *Fourteenth Report* may also wish to begin tracking bytes of use for mobile broadband and mobile Internet access services.

### G. Considering More Fine-Grained Factors Would Reflect Insufficient Competition.

These comments focus on the major analytical criteria of structure, conduct, behavior, and performance, as used by the Commission in the *Thirteenth Report*. Even with these limited criteria, proper analysis of the CMRS market reveals insufficient competition. However, the

[43] *See Thirteenth Report* at para. 195.
[44] *See Wireless Telecommunications Bureau Seeks Comment On Commercial Mobile Radio Services Market Competition*, Docket No. 09-66, Public Notice, at 12 (May 14, 2009) ("*Notice*").



VerDate Nov 24 2008 11:47 Jun 28, 2010 Jkt 056833 PO 00000 Frm 00103 Fmt 6633 Sfmt 6633 S:\GPO\HEARINGS\56833.TXT SJUD1 PsN: CMORC

56833.072

study of industrial economics generally considers a much richer set of criteria within these broader categories for determining whether competition is workable.[45] For example, within the realm of structural criteria, one factor worth considering is whether the market includes artificial barriers to mobility and entry, such as handset exclusivity arrangements.[46] Within the realm of conduct, two factors of note include the presence of exclusionary or coercive tactics (see, again, the example of handset exclusivity arrangements), and the level of misinformation or obscured information in sales promotions.[47] In the category of performance, profit levels that are more than that sufficient to reward investment, efficiency, and innovation may be signs of problems with competition.[48]

The Commission should apply a more detailed economical analysis of the CMRS market in the *Fourteenth Report* using more finely-grained tools, focusing on the perspective of the user and of promoting consumer choice.

## III. THE CMRS MARKET RESTRICTS ENTRY AND GROWTH.

Although much of the *Fourteenth Report* will be focused on market structure, conduct, and performance, the *Notice* requests comment and analysis generally on competition in the CMRS market.[49] Commenters therefore offer comment broadly on restrictions to entry and growth in the CMRS market that can be easily remedied with regulatory reform.

Market concentration analysis can only indicate distortions – it cannot explain them. That task falls to other features of the wireless market. In particular, the wireless market

[45] *See, e.g.*, F. M Scherer and David Ross, INDUSTRIAL MARKET STRUCTURE AND ECONOMIC PERFORMANCE (Houghton Mifling: Boston, 1990), p. 53-54.
[46] *Id.*
[47] *Id.*
[48] *Id.*
[49] *Id.* at 4.



VerDate Nov 24 2008 11:47 Jun 28, 2010 Jkt 056833 PO 00000 Frm 00104 Fmt 6633 Sfmt 6633 S:\GPO\HEARINGS\56833.TXT SJUD1 PsN: CMORC

56833.073

demonstrates high barriers to entry and growth, including the limited availability of spectrum, rapidly rising prices for wireless backhaul, limitations in roaming regulations, and difficulty in offering popular new devices which are exclusively offered to large incumbent carriers. The *Thirteenth Report* considered primarily spectrum availability as a limit on entry and growth; a scant two paragraphs were spent on other barriers to entry, and the *Report* did not mention many of the most substantial, practical barriers to entry and growth faced by small and nascent wireless service providers, particularly providers of mobile broadband service. Proper analysis of the CMRS market in the *Fourteenth Report* should demonstrate that the current market and regulatory structure cannot adequately remedy ongoing problems with competition. Thus, to promote competition through growth and new entrants in the market, the Commission must adopt policies and a regulatory structure to enable true effective competition.

**A. Spectrum Reform Is a Critical Requirement For a Vibrant Wireless Market.**

Limited availability of spectrum under current regulatory structures can restrict growth in and entry into the wireless market. But, with a proper regulatory regime, spectrum access should not be a substantial deterrent, as additional spectrum is available, and new technologies enable more efficient and effective use of the spectrum.

*1. Advanced technologies enable greater use of and access to spectrum.*

Advanced spectrum technologies are changing the way spectrum can be accessed. Interference in wireless transmission is a traditional concept that is no longer a severe constraint on the efficient use of the spectrum. Technologies such as spread spectrum radio and "smart" devices that can coordinate at low power levels without interference are in growing use today. These technologies allow data to be sent between various "smart" devices without interference. Additionally, the link between the frequency of a signal and the amount of data that can be sent



VerDate Nov 24 2008 11:47 Jun 28, 2010 Jkt 056833 PO 00000 Frm 00105 Fmt 6633 Sfmt 6633 S:\GPO\HEARINGS\56833.TXT SJUD1 PsN: CMORC

56833.074

on this frequency is decoupled, allowing for greater data transmission rates even on lower frequencies.

The Commission should identify ranges of spectrum that are or could be made available and could be used more effectively and efficiently through smart devices and proper spectrum allocations and policies. In fact, a large part of the spectrum allocated to broadcasting, military, and other services lies fallow today.[50] To maximize use of this spectrum, the Commission should conduct a full inventory of the nation's spectrum resources.

*2. Unlicensed use will enable greater use of and access to spectrum.*

To spur competition in the wireless market, the Commission should administer substantial portions of spectrum under a "public good" model. A public good model for spectrum use could be facilitated with the re-assignment of fallow spectrum from licensed to unlicensed (shared) use wherever possible. Undoubtedly, an unlicensed regime should have certain regulations in place to ensure that devices cooperate fairly in using the spectrum.[51] However, unlicensed use of more spectrum will help maximize vitality of the CMRS market.

The benefits of unlicensed spectrum are long term and proven.[52] Wi-Fi is an enormous affirmation of the power of unlicensed spectrum; from its use in homes, office LANs, parks, and public places (amenity unwiring) to wireless ISP (Starbucks, T-Mobile), Wi-Fi has become a

---

[50] *See, e.g.*, "Congress considers inventory of spectrum use in America," Free103point9 Newsroom (March 25, 2009), *at* http://blog.free103point9.org/2009/03/congress-considers-inventory-of.html.

[51] A "greedy" device that does not conserve the shared spectrum by using greater transmission bandwidth or long transmission intervals would be controlled by implementing technical rules (*i.e.*, modulation, back-off schemes, etc.).

[52] While an auction of the fallow spectrum for exclusive use to a limited number of entities would reap immediate capital, it would stifle the perpetual gains of an open spectrum.



VerDate Nov 24 2008 11:47 Jun 28, 2010 Jkt 056833 PO 00000 Frm 00106 Fmt 6633 Sfmt 6633 S:\GPO\HEARINGS\56833.TXT SJUD1 PsN: CMORC

56833.075

platform for user created value and innovation.[53] While the benefits of unlicensed spectrum are clear, in some instances a balance between licensed and unlicensed use of the spectrum is required. For instance, although unlicensed use enables greater utilization of the spectrum, applications such as broadcast television and public safety communications require greater quality of service, and thus would be better served by licensed spectrum allocations.[54]

By recently opening up white spaces for unlicensed use,[55] the Commission has already taken the first step towards unlicensed spectrum. However, more must be done to ensure that markets throughout the country, especially rural and underserved areas, will benefit from the opening of these fallow bands in the spectrum. Currently, transmission in these white spaces is limited to low power devices. This hinders the adoption of wireless use in rural areas since low power transmission requires a network with many towers, access points, and repeaters to maintain signal strength. Promoting transmission using a higher power level in rural and underserved areas would make wireless broadband more accessible to these communities.

**B. Special Access Reform Is Essential.**

Another barrier to entry and growth in the CMRS market, particularly in the offering of mobile Internet access services, is the current market norm of unreasonable special access pricing, terms, and conditions. Smaller (and new) carriers that do not own broadband infrastructure rely on special access transmission paths to support their telecommunication

---

[53] *See, e.g.*, Clay Shirky, "The Possibility of Spectrum as a Public Good," *Networks, Economics and Culture* (August 13, 2004), *available at* http://www.shirky.com/writings/spectrum_public_good.html.

[54] *See* Jon Peha, Carnegie Mellon University, *Emerging Technology and Spectrum Policy Reform* (January 2007) *available at* http://www.itu.int/osg/spu/stn/spectrum/workshop_proceedings/Background_Papers_Final/Jon%20Peha%20ITU%20spectrum%20workshop.pdf.

[55] *See In the Matter of Unlicensed Operation in the TV Broadcast Bands, Additional Spectrum for Unlicensed Devices Below 900 MHz and in the 3 GHz Band*, 23 FCCRcd 16807, Second Report And Order And Memorandum Opinion And Order (2008).



VerDate Nov 24 2008 11:47 Jun 28, 2010 Jkt 056833 PO 00000 Frm 00107 Fmt 6633 Sfmt 6633 S:\GPO\HEARINGS\56833.TXT SJUD1 PsN: CMORC

56833.076

businesses.[56] Competition is necessary in the special access market to ensure that dominant incumbent carriers do not overcharge for the use of these lines or impose unreasonable terms and conditions.

Currently, few incumbent providers of special access exist. As a result, they are able to use their market power to offer high special access prices.[57] For example, in 2007, Verizon received a 700% rate of return for the use of its special access services.[58] These types of special access rates introduce hurdles for small and new wireless providers, especially when they have to compete with the incumbents (who are already at an advantage due to special access pricing) in the last mile of the network. The Commission should ensure that these small providers are protected from unreasonable special access pricing so that they can focus on using their capital for providing better services and products to customers.

The Commission currently assesses the need for special access price regulation based on market competition. However, the Commission's methodology for measuring competition has been evaluated as incorrect in various studies that have been conducted. The Commission measures competition by the number of competitive carriers who set up their equipment on an incumbent's network in Metropolitan Statistical Areas.[59] By setting up equipment in the incumbent's network, the small competitive carrier is assumed to have made a long term investment that will keep a check on any market power that the incumbent exerts.

---

[56] Special access also caters to the telecommunication needs of vital institutions like hospitals, universities and banks.

[57] *See, e.g.*, Peter Bluhm and Robert Loube, *Competitive Issues in Special Access Markets*, National Regulatory Research Institute (January 21, 2009); Matthew Lasar, "Report Reignites Fights over Special Access Rates," *Ars Technica* (January 26, 2009), *at* http://arstechnica.com/tech-policy/news/2009/01/report-reignites-fight-over-special-access-rates.ars.

[58] *See* Derek Turner, Free Press, *Dismantling Digital Deregulation: Towards a National Broadband Study* (2009).

[59] *See* Bluhm and Loube, *supra* note 57.



VerDate Nov 24 2008 11:47 Jun 28, 2010 Jkt 056833 PO 00000 Frm 00108 Fmt 6633 Sfmt 6633 S:\GPO\HEARINGS\56833.TXT SJUD1 PsN: CMORC

56833.077

However, according to the Government and Accountability Office ("GAO"), this gives an inaccurate estimation of competition.[60] The GAO has noted that the Commission's assessment does not take into account that some of these competitive carriers either merge with the incumbents or do not survive in the long term.[61] The GAO suggested that pricing and market power also factor in the equation for determining competition.[62] Also, the National Association of Regulatory Utility Commissioners has conducted a study recently which too advised the Commission against the use of its current methodology for measuring competition in special access markets.[63]

**C. Consolidation Has Harmed Growth and Access for New Entrants.**

Consolidation of market power in the CMRS market has created barriers to entry for new entrants and fosters an anti-competitive environment. Most of this consolidation has been possible due to the absence of spectrum caps – without spectrum caps, the large market participants have advantages in growing larger and acquiring new spectrum. Vertical integration among wireline and wireless providers has also prevented growth in the CMRS market.

*1. The elimination of spectrum caps has facilitated consolidation.*

To prevent incumbent wireless providers from getting the "first-mover advantage," spectrum caps were introduced by the Commission in 1994.[64] However, these spectrum caps were terminated in 2003 on the premise that no single wireless provider had significant market

---

[60] *See* U.S. Government and Accountability Office, *Telecommunications: FCC Need to Improve Its Ability to Monitor and Determine the Extent of Competition in Dedicated Access Services* (November 19, 2006).
[61] *See id.*
[62] *See id.*
[63] *See* Bluhm and Loube, *supra* note 57.
[64] *See* Simon Romero, "F.C.C Is Expected to Lift Airwave Spectrum Cap," *The New York Times* at C6 (November 8, 2001), *available at* http://www.nytimes.com/2001/11/08/business/fcc-is-expected-to-lift-airwave-spectrum-cap.html.



VerDate Nov 24 2008 11:47 Jun 28, 2010 Jkt 056833 PO 00000 Frm 00109 Fmt 6633 Sfmt 6633 S:\GPO\HEARINGS\56833.TXT SJUD1 PsN: CMORC

56833.078

power that could prove to be a threat to competition.[65] Since then, there has been a transition from a CMRS market that thrived on competition to one that is influenced by a few incumbent providers.

In the absence of spectrum caps, incumbent providers have gained access to large portions of the spectrum. For example, the recent 700 Mhz spectrum auction substantially increased the market power of two incumbents – AT&T and Verizon – leaving the market highly susceptible to anti-competitive actions.[66] Even when Commission regulations force one of the two big carriers to divest spectrum, the other of the two often purchases it, leaving unchanged the market share held by the big two.[67] The elimination of spectrum caps has enabled the two largest providers to use their purchasing power at spectrum auctions and ward off new entrants in the market. The Commission should consider readopting a spectrum cap to ensure that small and new providers are able to access the available spectrum resources of the nation.

*2. Joint ownership and lack of intermodal competition among wireline and wireless providers restrain growth in the wireless market.*

CMRS carriers that are also incumbent wireline providers – namely AT&T and Verizon – hold disproportionate power in the wireless market. Lack of regulation permits incumbents to utilize a number of anticompetitive measures to demonstrate power in the market. First, incumbents hold the capacity to position themselves and their products to ensure that customers who switch from the wireline service will remain users of wireless service offered by the same

---

[65] *See* Press Release, Federal Communications Commission, FCC Announces Wireless Spectrum Cap To Sunset Effective January 1, 2003 (November 8, 2001), *available at* http://www.fcc.gov/Bureaus/Wireless/News_Releases/2001/nrwl0129.html.

[66] *See* Bryan Gardiner, "In Spectrum Auction, Winners Are AT&T, Verizon and Openness," *Wired* (March 20, 2008), *at* http://www.wired.com/epicenter/2008/03/fcc-releases-70.

[67] John Paczkowski, "AT&T and Verizon Sitting in a Tree, D-U-O-P-O-L-Y," *Digital Daily* (May 11, 2009), *at* http://digitaldaily.allthingsd.com/20090511/att-and-verizon-sitting-in-a-tree-d-u-o-p-o-l-y/.



VerDate Nov 24 2008 11:47 Jun 28, 2010 Jkt 056833 PO 00000 Frm 00110 Fmt 6633 Sfmt 6633 S:\GPO\HEARINGS\56833.TXT SJUD1 PsN: CMORC

56833.079

provider. It has been estimated that after its merger with Cingular, AT&T gained an 82% probability of capturing a customer who cancelled his or her wireline service into AT&T's wireless pool.[68] As a former Bellsouth CEO described in 2001, "Wireless substitution is now a fact. That's okay. We tend to own both."[69]

Second, incumbents hold the exclusive ability to bundle wireline and wireless services to dissuade their customers from wireline-wireless substitution and to retain their overall subscriber base. In 2004, for example, Verizon introduced its "iobi" platform, which integrated wireline, wireless, and data services so that customers could access features of each in a seamless fashion.[70] Although wireline-wireless bundling may not have received the same success as some other bundling ventures, intermodal market power held by wireline incumbents grants them access to attempt to push subscribers "cutting the cord" towards their own wireless services.

**D. Loopholes In Roaming Regulations Limit New Entrants And Growth.**

In August 2007, the Commission ruled that voice roaming, or the ability to place a call outside of a CMRS provider's network without taking special action to initiate that call, is a common carrier service that must be provided on a "just, reasonable, and non-discriminatory basis."[71] In other words, carriers could not refuse to provide roaming service to other carriers when technologically possible, and carriers could not charge unreasonable rates for the service.

---

[68] *See* Lawrence J. Spiwak, "Fixed-Mobile 'Intermodal' Competition in Telecommunications: Fact or Fiction?" Phoenix Center Policy Bulletin No. 10 at 9 (March 31, 2004).
[69] Duane Ackerman, "More Callers Cut off Second Phone Lines for Cellphones, Cable Modems," *Wall Street Journal* at B1 (November 15 2001).
[70] *See* Zimmerman, P. R., *The Cingular/AT&T Wireless merger, wireline-affiliated wireless carriers, and intermodal competition in telecommunications*, Working Paper (2005). Zimmerman also mentions a similar effort by Bellsouth and Cingular in their launch of a service that provided a single pool of minutes for both wireless and long-distance wireline use.
[71] *In the Matter of Reexamination of Roaming Obligations of Commercial Mobile Radio Service Providers*, WT Docket 05-265, Report And Order And Further Notice Of Proposed Rulemaking, 22 FCC Rcd 15817 (2007) ("Roaming FNPRM").



VerDate Nov 24 2008 11:47 Jun 28, 2010 Jkt 056833 PO 00000 Frm 00111 Fmt 6633 Sfmt 6633 S:\GPO\HEARINGS\56833.TXT SJUD1 PsN: CMORC

56833.080

However, the Commission enacted two harmful limitations to these automatic roaming obligations that result in continued substantial limitations to market entry and growth.

First, the Commission placed a so-called "home" or "in-market" exception that allows CMRS carriers to refuse to provide automatic roaming in any area where the requesting carrier merely holds a wireless license or spectrum usage rights. The adoption of this rule effectively removed Title II common carrier protections, which would subject CMRS providers to enforcement action if they fail to enter roaming agreements with competitors. The exception now gives large facilities-based network operators, such as AT&T and Verizon, the ability to deny roaming to a smaller competitor if that competitor has a license within a large operator's any given "home" area. This creates a disincentive for small companies to seek out additional spectrum licenses – a precondition for building towers and expanding service and growing as a competitor – lest they lose their rights to roam in those regions adjacent to their current service territories, those regions where they most need to grow and yet most need to maintain service.

Even within current service territories, the "in-market" loophole means that consumers of a competitive wireless provider's service may be unable to make or receive calls in portions of their own city or town, but will receive roaming service when traveling outside of their "home" market. This means that some consumers may receive wireless service in their homes, but may be unable to make calls in their workplace or while traveling around town. Such service limits are highly confusing for the consumer. Further, the in-market exception may prevent some subscribers from accessing emergency alerts, placing the safety of consumers at undue risk.[72]

[72] *See* Public Knowledge on behalf of Public Interest Spectrum Coalition, *Notice of Ex Parte Filing, Docket No. 05-265, Reexamination of Roaming Obligations of Commercial Mobile Radio Service Providers* (August 13, 2008).



VerDate Nov 24 2008 11:47 Jun 28, 2010 Jkt 056833 PO 00000 Frm 00112 Fmt 6633 Sfmt 6633 S:\GPO\HEARINGS\56833.TXT SJUD1 PsN: CMORC

56833.081

The Commission should eliminate the in-market exception and ensure that equitable roaming services are provided to all wireless carriers and consumers nationwide.

Second, the Commission also limited the mandate for automatic roaming to real-time, two-way switched voice and data services that are interconnected with the public switched telephone network, along with push-to-talk and SMS services. The Commission chose not to extend automatic roaming obligations to non-interconnected services, including in particular data services such as mobile Internet access. Unequal treatment of different mobile wireless services once again presents a confusing, yet potentially costly, framework for the consumer. It further limits the ability of smaller competitors and new entrants to deliver high-quality, high-range mobile broadband and mobile Internet access services to their customers, the very services most needed for growth in the modern CMRS market.

The combination of these two loopholes creates substantial barriers to entry and growth for would-be competitors in CMRS services. At a minimum, the impact of these policies on the state and growth of competition should be evaluated in the *Fourteenth Report.*

## IV. CONCLUSION

Competition leads to lower prices, higher speeds, better services, broader deployment, and more innovation. With insufficient competition, incentives to invest are reduced, prices remain artificially high, and consumers suffer while inflating the profit margins of major corporations. The current CMRS market is simply not sufficiently competitive, and the Commission should aggressively pro-competitive regulatory policies to revive and expand wireless competition.



VerDate Nov 24 2008 11:47 Jun 28, 2010 Jkt 056833 PO 00000 Frm 00113 Fmt 6633 Sfmt 6633 S:\GPO\HEARINGS\56833.TXT SJUD1 PsN: CMORC

56833.082

Respectfully submitted,
/s/
Parul P. Desai
*Counsel for Consumers Union*

Chris Riley
*Counsel for Free Press*

Mark Cooper
Consumer Federation of America

Parul P. Desai
Andrew Jay Schwartzman
Kamilla Kovacs
Shanu Pant
Media Access Project

Joel Kelsey
Consumers Union

Michael Calabrese
Sascha Meinrath
New America Foundation

Ben Scott
Chris Riley
Free Press

Harold Feld
Gigi Sohn
Public Knowledge

June 15, 2009



56833.083

Testimony by:

Prof. S. Keshav
University of Waterloo, Waterloo, Ontario, Canada

At the hearing on:

# Cell Phone Text Messaging Rate Increases and the State of Competition in the Wireless Market

held by the **Senate Subcommittee on Antitrust, Competition Policy and Consumer Rights**

June 16, 2009



56833.084

# The cost of text messaging

S. Keshav

Professor and Canada Research Chair in Tetherless Computing

School of Computer Science, University of Waterloo

Waterloo, Ontario, Canada N2L 3G1

June 10, 2009

## 1. Introduction

Text messaging, also known as Short Message Service or SMS, is a popular communications technology. Nearly 3.5 trillion text messages were sent worldwide according to Portio Research [1] and message volumes are expected to rise to five trillion messages worldwide in 2011. Over a trillion text messages were sent in the United States in 2008, according to the CTIA, a trade association [2].

Recently, most major US carriers raised the price of a text message sent by a consumer who is not subscribed to a text-messaging plan from 15 cents to 20 cents. Two questions naturally arise:

- What is the cost to a carrier to transmit a text message?
- Are these price increases cost-justified?

The purpose of this note is to address these questions.

I believe that to clearly analyze the costs incurred in text messaging and to form an informed opinion whether the price increases are cost-justified, it is necessary to understand the technological components which contribute to the cost of carrying a text message. These include the technologies for carrying text messages over wired and wireless links and the specialized databases for billing and locationing. By estimating the cost of each underlying component, I estimate the maxiumum possible cost to a carrier to carry a text message. It also allows me to determine whether increased message volumes should result in the increase in the cost of carrying a text message.

Here is a roadmap for the rest of the note: Section 2 describes the technology underlying text messaging. In Section 3, I use publicly-available information to estimate the cost of a text message as approximately 0.3 cents. Section 4 demonstrates that an increase in text messaging volume should not result in an increase in the cost per text message. Finally, Section 5 presents my conclusions.

## 2. An Overview of Text Messaging Technology

In order to understand the costs incurred in text messaging, I now present a brief overview of the underlying technology.

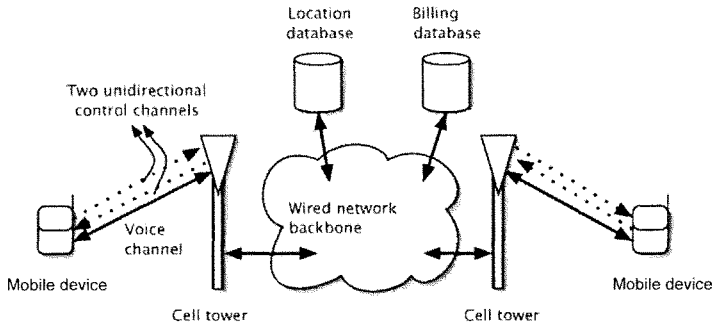


**Figure 1: Text messaging components**

Figure 1 shows an overview of the cellular phone system. It focuses on the path taken by a text message. Mobile devices receive wireless service from their associated cell towers. The cell towers are connected by wired links to a wired network backbone, which resembles the Internet backbone. This backbone is also connected to a location database, which keeps track of which cell tower is currently responsible for each mobile device, and a billing database, which keeps track of the messages sent and received by each mobile device.

Several wireless communication channels are maintained between a mobile device and its associated cell tower. When a voice call is in progress, a two-way voice channel between the cell tower and each mobile device is used to carry the call between the mobile device and the cell tower. In addition, a pair of one-way permanently-established control channels between the cell tower and each mobile device is used not only to establish and terminate voice calls but also to carry text messages.

A text message originating from a mobile device is sent over the air on a control channel to its associated cell tower, where it enters the network backbone. It is first stored in a message store associated with the source network (not shown), then routed to the destination cell tower, and then sent over another control channel to the destination mobile device. If the destination is not available at that time, the message is temporarily stored in a message store associated with the destination (not shown) and delivered when the destination becomes available.

A billing database keeps track of the messages sent and received by each mobile device. This database generates a monthly bill. Charges depend both on the usage as well as the plans to which the mobile device owners are subscribed. Finally, a location database keeps track of the current location of each mobile device.



56833.086

## 3. The Cost of a Text Message

Telecommunications carriers do not disclose the cost of a text message publicly. Nevertheless, it is possible to estimate the cost of text messaging in two ways:

- A marginal price analysis allows a loose estimate of the maximum possible cost of a text message (Section 3.1)
- A careful consideration of the underlying technology allows tighter estimates (Sections 3.2-3.6)

### *3.1 Marginal Price Analysis*

We can limit the maximum possible cost to the carrier of a text message by assuming that carriers do not want to lose money on their text-messaging service. For this to be true, their revenues--reflected in the price charged--must be larger than their costs. Specifically, the advertised price per text message must be the maximum possible cost of a text message.

Lets look at an example. According to its website, T Mobile offers a plan where up to 1000 messages can be sent for $9.99 [3]. With this plan, the price of a text message to a consumer is 1 cent. Assuming that T Mobile does not want to make a loss on this plan, this limits the maximum cost of a text message to 1 cent.

This analysis is simple but flawed. It assumes that a consumer who subscribes to, for example, a 400-message plan would actually send 400 messages over the course of a month. Consider a hypothetical carrier that discovered, through mesurements, that consumers who purchase 400-message plans sent only 200 messages on average. Such a carrier could allow a maximum of 400 messages in a plan, but price the plan assuming that only 200 messages would actually be sent. It would only incur costs for 200 messages. If we were to divide the price of the 400-message plan by 400, we would be over-estimating the cost of each message. We should be dividing by 200 instead. Another way of saying this is that we cannot discover the maximum cost of a text message simply by dividing the price of a plan by its maximum allowed volume: we need to estimate the *average* usage of a plan.

Although the average usage of a plan is a closely-guarded secret, we can estimate this value as follows. Consider a consumer who has a choice of a 400-message plan and an unlimited-message plan. Such a consumer would choose the unlimited message plan *only if they sent at least 400 messages on average every month.* Otherwise, they would be better off with the 400-message plan. This means that we can estimate the minimum average message volume for a plan as being equal to the maximum allowed message volume of the *next cheaper* plan. Continuing with our example, a consumer who chooses an unlimited-message plan has a strong incentive to send at least 400 messages a month. Therefore, if we divide the price of the unlimited-message plan by 400, we obtain a good estimate of the maximum possible cost of a text message.

As of June 5, 2009, T Mobile charges $15 for unlimited messages [3]. Its next lower tier has an upper limit of 1000 messages. So, the estimated maximum per-message cost for T Mobile is 1.5 cents. Similarly, AT&T charges $20 for unlimited messages [4] and the next lower tier has an



56833.087

upper limit of 1500 messages. This gives us an estimated maximum message cost for AT&T of 1.33 cents. The equivalent maximum cost for Sprint is 2 cents [5]. Verizon appears to offer only per-message and unlimited message plans [6] and therefore it is not possible to estimate its cost using marginal price analysis.

These results are summarized in the table below.

| **Carrier** | **Upper bound on cost of a text message (cents)** |
|---|---|
| T Mobile | 1.5 |
| AT&T | 1.33 |
| Sprint | 2 |
| Verizon | Cannot be determined using marginal price analysis. |

Assuming that all carriers incur the same costs in carrying a text message, this analysis shows that the **cost of a text message is no more than 1.33 cents**.

### *3.2 Estimating the Cost of a Text Message from Consideration of Cellular Technology*

We now refine our estimate of the cost of a text message by looking more closely at the underlying technology. A text message traverses two wireless and one wired path (see Figure 1). Typically, consumers pay both to send and to receive a text message. Therefore, we need to estimate only the cost of one wireless path and half of the wired path. We also need to estimate the cost of storing a text message if the recipient is unavailable. Finally, we need to estimate the costs of updating the billing and location databases. We now address these costs one by one.

#### 3.2.1 Cost of the Wired Path

Portio Research estimates that roughly 3.5 trillion text messages were sent in 2008 [1]. We can express this in scientific notation as $3.5*10^{12}$ messages. The message volume for 3.5 trillion messages is $3.5*10^{12}$ messages * 140 bytes/message * 8 bits/byte = $3.92 * 10^{15}$ bits A high-capacity 10 Gigabit/second (Gbps) backbone network link carries $10^{10}$ bits/sec. To carry the entire global message volume for the entire year would therefore take $3.92 * 10^{15}$ bits/$10^{10}$ bits/sec = $3.92 * 10^{5}$ seconds, which is about 62 hours, or about 4.5 days out of a total of 365 days in a year. Thus, carrying 3.5 trillion text messages imposes a load of only 1.24% on such a link, leaving 98.76% available for other traffic.

The wired network backbone of each carrier has many of these high-capacity links organized in the form of a mesh. No single link would carry the entire volume of text messages. Conservatively assuming that the link carrying the most text messaging traffic carries 20% of the entire messaging volume, this would imply that this link would have a text messaging load of 0.24% (leaving 99.76% available for other traffic).

Major carriers, such as Verizon, sell a nationwide10Gbps service to their customers [7]. Their own backbone links are likely to be of even higher capacity, and would therefore have



56833.088

correspondingly lower loads. For instance, a 40 Gbps link, which is typical of a long-distance backbone link, would have a text messaging load of 0.06% (leaving 99.94% of the link available for other traffic). Other carriers are likely to have similar text message loads.

Given that the text messaging load, even under very conservative assumptions, does not exceed 0.06% (six ten-thousandths) of the capacity of a wired network link, we ignore the cost of the wired path in our calculations.

### 3.2.2 Cost of a Wireless Path

Unlike wired paths, which are very high capacity, wireless paths have significantly lower capacity. Moreover, spectrum licenses cost tens of billions of dollars. Therefore, the cost of a text message is primarily due to its use of a wireless path.

Text messages to and from a mobile device are sent over a pair of wireless control channels called the Random Access Channel (RACH) and the Standalone Dedicated Control Channel (SDCCH). These channels were originally designed for voice call control and signalling. As the volume of text-messaging volume grows, a carrier must allocate additional control channels to carry text messages: this displaces a Traffic Channel (TCH) that would otherwise be used for voice. We can use this fact to calculate the cost of a text message as follows.

Voice is typically carried in cellular networks at the rate of 8000 bits/second. A text message is 140 bytes or about 1100 bits. Therefore, a voice channel can carry about 7 text messages/second, or 420 text messages/minute. Of course, this assumes that a channel can be used at full capacity. However, the RACH uses a mode of transmission known as Slotted Aloha, whose capacity levels off at about 37% utilization. Therefore we can conservatively assume that the channel operates at only 20% utilization. This gives us the capacity of a channel as 84 text messages/minute.

The capacity of a channel decreases if messages can be lost and must be retransmitted. Studies show that the loss rate of text messages is about 3% [8]. Taking this into account, it can be shown that the resulting capacity of a channel, including the extra messages due to retransmissions, is about 81 messages/minute.

The price of a voice minute in the US and Canada is about 15 cents/minute when billed as *overage* (that is, over the plan limit) but is only about 7 cents/minute as part of a plan, depending on the carrier [9]. The per-minute cost of a channel is upper-bounded by this price. So, the wireless path cost of a text message in the US cannot exceed roughly 7c/81 ~= 0.09 cents in the US and about 0.10 cents in Canada.

### 3.2.3 Billing Cost

As shown in Figure 1, in addition to the cost of the channel, each text message can result in one or more control messages being sent to a billing system. These messages are used to provide the billing system with the identity of the sender and the receiver of the text message, so that their monthly bills can be properly calculated. Specifically, these messages are used for monitoring



56833.089

usage, finding what rate plan a message should be charged at, and then adding this charge to the sender's and the receiver's bill.

One way to estimate the cost of these control messages is based on the fact that that carriers are certainly not going to make a loss when pricing a text message as part of a plan at 1.33 cents/text message (Section 3.1). Based on the computation that the wireless path cost is roughly 0.1 cents (Section 3.2.2), the additional cost of billing cannot exceed 1.23 cents/text message. If this is indeed the cost of billing, carriers would make no profit on a text message as part of a plan but a profit of 13.6-18.6 cents/text message for out-of-plan messages (which are charged at between 15 and 20 cents a text message).

However, it seems implausible that accounting for a text message would cost twelve times as much as carrying the message itself. If we assume that accounting is *twice* as expensive as carrying the message (a conservative estimate) then we can estimate the cost of a text message, including billing at 0.3 cents/text message.

### 3.2.4 Paging Cost

If the carrier's mobile device location database, called the Location Register in Figure 1, does not know the current location (i.e. nearest cell tower) of a mobile device, a special control channel called the paging channel is used to locate it. Essentially, a *paging* message is sent to all the cell towers where a mobile device could be located, based on its recent mobility history, and the mobile device answers the paging message making itself known. The recipient of a text message, therefore, causes a paging message load on the operator which adds to the operator's cost.

The calculations thus far do not include the paging cost incurred by a text message. Paging costs depend on the choice of *paging policy*, that is, how aggressively the location of a mobile device is tracked. With an aggressive paging policy, every movement of a mobile device to a new cell tower location results in an update to the Location Register, but then there is no need for additional paging messages to locate the mobile device when it receives a text message. This works well for relatively static mobile devices that will not result in the generation of too many location update messages. With less-aggressive location tracking, all cell towers near the last known cell tower need to be paged. This reduces the tracking costs for highly mobile phones, but increases paging costs. How should this be accounted for?

Note that paging traffic is necessary even for establishing a standard voice call. Therefore, as a first cut approximation, it is reasonable to assume that the cost of a voice minute already includes the cost of paging. Because the wireless path cost of a text message was computed from the cost of a voice minute (Section 3.2.1), the paging cost of a text message is included in the estimate of 0.1 cents/text message.

One could argue that this estimate is too low because a voice call that lasts, on average, three minutes, and requires only one page, but each text message may require its own page. So, the costs of paging could be proportionately higher for text messages because they have a much shorter duration. However, once a mobile has been located, either for a voice call or an text message, it no longer needs to be paged again, because its location is known. If a mobile were to



56833.090

receive three text messages over the course of three minutes, for example, only the first text message would incur a paging cost, just as a voice call would. The paging costs for a call or a text message are comparable, and the analysis of Section 3.2.1 continues to hold.

### 3.2.5 Storage Cost

All text messages are stored at a message storage system associated with the source. Moreover, if a text message cannot be delivered to a recipient, it must be stored until the recipient becomes available. A carrier has to pay for a message storage system, which adds to the cost of delivering each temporarily-stored message. The cost of a storage system depends on its capacity: the higher the capacity, the greater the cost.

Today, consumers can buy 5 Terabyte of storage, which is enough to store 35.5 million text messages, for about $1000 [10]. More reliable storage systems with support for high performance and fault tolerance using RAID technology are a little more expensive, and cost about $1000/Terabyte [11].

We can estimate the approximate cost of storage as follows. Suppose that all text messages are stored either at the source or the destination, on average, for one day (this is a very conservative assumption: most text messages are delivered within a minute or two). In 2008, 3.5 trillion text messages were sent, which is roughly 9.58 billion messages per day. If each message were stored for one day, then we would need storage for 9.58 billion messages. This requires roughly 1,343 Terabytes, which costs around $1.34 million. This adds a storage cost of only 0.00014 cents to each text message.

### 3.2.6 Database Cost

Carriers need to pay for a location database, usually called a Home Location Register, and a billing database. These systems can be quite expensive. For instance, a high-end database from Oracle Corp. can cost up to a million US dollars [12]. It is reasonable to assume that a location register database has a similar cost. Conservatively, the total database cost to a high-end carrier is very unlikely to exceed $10,000,000 per year. Such a carrier would carry at least 1% of the total global text-messaging traffic, or about 35 billion text messages. This would add a per-message database cost of 100 cents/dollar$*10*10^6$dollars/$35*10^9$cents/message = 0.03 cents/message. Again, this is a negligible cost.

### 3.2.7 Summary

Including the cost of the wired and wireless paths, billing, paging, databases, and storage, the cost of a text message is likely to be no greater than 0.3 cents.



56833.091

## 4. Does the increase in text messaging volumes increase the cost of each message?

Increased text message volumes do increase the total cost to an operator, but the cost *per message* does not appreciably change. Indeed, they tend to decline per message. This is because fixed costs are amortized over larger numbers of messages, and per-message variable costs, which we have discussed above, do not change with the number of messages carried.

The only possible reason why overall costs may go up with increased volume of messages is if a carrier runs out of spectrum resources and is therefore unable to carry voice calls. This introduces a 'congestion cost.'

It is unlikely that a carrier would run out of spectrum from carrying text messages. Each cell tower typically has three 'sectors' which can each handle approximately 1000 voice calls simultaneously. This would allow the spectrum available at a single sector at a single cell phone tower to handle 81,000 text messages a minute, and a single cell phone tower to handle 243,000 text messages a minute, or roughly 128 billion text messages a year. So, the entire international text messaging volume in 2008 could be handled by just 28 cell towers. Compare this to the total number of cell towers in the world which are estimated to be around 4 million, with 300,000 sold in 2008 alone [13].

Of course, this is a simplistic calculation, but it merely points out that radio spectrum, though scarce, is not overly used by text messages. Therefore, even with increased text messaging volumes, the underlying costs do not increase.

## 5. Conclusions

I have demonstrated using publicly available data that the maximum cost of a text message is very unlikely to exceed 0.3 cents. I now address the issue of whether the price of text messages is commensurate with this cost.

Carriers typically charge consumers 15-20 cents/text message for non-plan messages and about 1.5 cents/text message for in-plan messages. Therefore, carriers have a profit margin of at least 80% for in-plan messages and at least 98% for non-plan messages. Typical profit margins in the software industry are around 40% and typical profit margins in regulated monopolies are in the range of 5-10%. The profit margins enjoyed by carriers of text messages greatly exceed these guidelines.

Major US carriers recently raised the price of non-plan messages from 15 to 20 cents. No reason was given for this increase other than a reference to increasing messaging volumes. As the preceding analysis shows, one should see the cost per message actually decrease as a function of text messaging volumes. Therefore, it is my opinion that the price increases are not cost-justified.



56833.092

## References

[1] Mobile Messaging Futures 2009-2013, Portio Research, November 2008. http://www.portioresearch.com/MMF09-13.html

[2] CTIA – The Wireless Association® Announces Semi-Annual Wireless Industry Survey Results, April 2009. http://www.ctia.org/media/press/body.cfm/prid/1811

[3] T-Mobile Text Messaging Plans

http://www.t-mobile.com/shop/addons/Services/information.aspx?PAsset=Messaging&oscid=4CD51BA7-B5AF-4AB2-85E0-50EC0AF141F9&tp=Svc_Tab_TextMessaging

[4] AT&T Text Messaging Plans

http://www.wireless.att.com/cell-phone-service/services/services-list.jsp?catId=cat1470003&LOSGId=&catName=Messaging+and+MEdia(TM)+Bundles&_requestid=278648

[5] V. McCann, Letter to Senator H. Kohl in response to his enquiry, October 6, 2008.

[6] Verizon consumer plans. http://www.verizonwireless.com/b2c/splash/plansingleline.jsp?lid=//global//plans//voice+plans//individual

[7] Verizon Nationwide 10 Gbps service. http://www22.verizon.com/wholesale/solutions/solution/U.S.%2BWavelength.html

[8] Earl Oliver, Exploiting the Short Message Service as a Control Channel in Challenged Network Environments. *MobiCom 2008 Workshop on Challenged Networks (CHANTS)*. San Francisco, United States. September 2008.

[9] The mean cost per voice minute in 2007 was 11 cents in Canada and 6 cents/minute in the US. The global high was 32 cents a minute in Switzerland and low was 2 cents a minute in Bangladesh and India.

[10] LaCie 5big Network 5TB drive. http://www.cdw.com/shop/products/default.aspx?EDC=1596257

[11] AmazonS3 costs. http://aws.amazon.com/s3/faqs/#How_much_does_Amazon_S3_cost

[12] Oracle Enterprise Database Price List. http://www.oracle.com/corporate/pricing/technology-price-list.pdf

## STATEMENT OF SENATOR HERB KOHL

Today we examine the state of competition in the cell phone industry. The enormous growth in the use of cell phones means that maintaining competition in this industry is more important than ever. With more than 270 million subscribers, cell phones are a vital means of communications for the vast majority of Americans. Cell phones enable instantaneous communications for millions wherever they are located, whether at work, at home, away from home, in their car, or anywhere in between. Many Americans – over 20% -- have now discarded traditional land line phones and depend entirely on cell phones. The ease, convenience, and universal nature of today's cell phone service would have been unimaginable just two decades ago.

For many years as this industry developed, it was a competition success story – with many rivals and vigorous price competition. In recent years, however, the picture has changed. Consolidation has left this industry highly concentrated. Four national carriers now control over 90% of the cell phone market. Two of them – today's witnesses AT&T and Verizon -- combine to have a market share of 60%. Consumers' choices have become quite limited, and price wars seem to be a thing of the past. American consumers pay more for wireless phone service than most other developed nations – an average of $ 506 per year in 2007.

Nowhere is the changed market for cell phones more noticeable than in text message service. These short, instant messages delivered via cell phones have become enormously popular. In 2008, more than 1 trillion text messages were sent, more than triple the number of just two years before. As their popularity has grown, so has the price charged on a per message basis. From 2006 to 2008, the price of sending and receiving a text message among the four largest cell phone carriers increased by 100% -- from 10 to 20 cents per message. The four companies increased their text messaging prices in two steps -- first from 10 to 15 cents, and then from 15 to 20 cents -- within months or weeks of each other. These lockstep price increases occurred despite the fact that the cost to the phone companies to carry text messages is minimal – estimated to be less than a penny per message – and has not increased.

The phone companies defend these price increases by asserting that they have not been coordinated in any respect. They also point out that the majority of cell phone customers do not pay for text messages on a per message basis, but instead buy plans for "buckets" of text messages, typically starting at $ 5 for 200 messages. Nonetheless, these sharp price increases raise concerns. Are these price increases the result of a lack of competition in a highly concentrated market? Will consumers continue to see similar price increases for this and many other wireless services that they have come to increasingly depend on, such as internet connections and basic voice service? Do text message price increases represent a warning sign for the state of competition in the cell phone industry as a whole?



56833.095

## STATEMENT OF SENATOR HERB KOHL

The concentrated nature of today's cell phone market should make us wary of other challenges to competition in this industry. For example, smaller competitors raise serious questions about practices that prevent them from being able to fairly compete. These range from exclusive deals that deny competitors access to the most in-demand cell phones, to limitations on the ability of new competitors to roam on other providers' networks, to difficulties in obtaining needed spectrum. It is imperative that we work to remove undue barriers to competition to ensure consumers the best rates and services.

We therefore urge the FCC take all necessary action to remove each of these barriers to competition. Removing these barriers will ensure that the cell phone market is open to competition and prevent the large carriers from gaining a stranglehold on this market. We also urge the Justice Department to closely scrutinize future mergers and allegations of anti-competitive practices in this industry.

Today's hearing thus comes at a critical time for competition in the cell phone industry. I look forward to the testimony of our panel of witness on this important topic.



56833.096

**TESTIMONY**

**OF**

**RANDAL S. MILCH**
**EXECUTIVE VICE PRESIDENT AND GENERAL COUNSEL**
**VERIZON COMMUNICATIONS INC.**

**BEFORE THE**

**SUBCOMMITTEE ON ANTITRUST,**
**COMPETITION POLICY,**
**AND CONSUMER RIGHTS**

**COMMITTEE ON THE JUDICIARY**

**UNITED STATES SENATE**

**CELL PHONE TEXT MESSAGING RATES INCREASES AND THE STATE OF COMPETITION IN THE WIRELESS MARKET**

**JUNE 16, 2009**



56833.097

Good morning, Mr. Chairman and members of the Subcommittee. It is a pleasure for me to appear before you today on behalf of Verizon Wireless at this hearing.

**Verizon Wireless Differentiates Its Services From Its Competitors In Many Ways**

Verizon Wireless is proud to offer Americans the best service of any wireless carrier. *Consumer Reports* magazine, for the past several years in a row, has given us the highest rating among all the wireless carriers for service quality. In its most recent survey published in January, which included responses from more than 50,000 consumers, Consumer Reports found a "surge in satisfaction" and that "Verizon is a standout cell-phone carrier for most people." Last month the American Consumer Satisfaction Index issued a press release finding that "[c]ustomer satisfaction with wireless telephone service reache[d] a new all-time high for the third consecutive year." "Verizon Wireless jump[ed] 3% ... to continue its lead over the industry." Verizon Wireless and the whole wireless industry continue to move in the right direction.

We've invested many billions of dollars to give our customers what they want and demand. Verizon Wireless was the first wireless carrier in the United States to offer 3rd generation, or 3G, services that enabled our customers effectively to use email, the web, video, music and many other services over their wireless devices. We then upgraded to an even faster version of 3G a few years later, ahead of the competition, giving customers



VerDate Nov 24 2008 11:47 Jun 28, 2010 Jkt 056833 PO 00000 Frm 00128 Fmt 6633 Sfmt 6633 S:\GPO\HEARINGS\56833.TXT SJUD1 PsN: CMORC

56833.098

the ability to download a reasonably large .pdf file to their laptop in less than ten seconds. Our competition was forced to respond, all to the benefit of consumers, by accelerating their 3G plans. The result has been an explosion in the number and variety of smart phones and data air cards; in applications for those phones (over 40,000 and counting); and in the use of all types of services demanded by consumers and businesses.

And I'm proud to say Verizon Wireless is leading the technological charge again. We are deploying the first 4th Generation network in the United States based on the 4G technology standard called Long Term Evolution, and one of the first in the world. Long Term Evolution will give our customers peak download speeds of 50-60 Mbps, with an average of 5-12 Mbps. That's ten times the throughput and capacity of 3G. We plan to have the service up and running for customers in 25-30 markets in 2010, with full nationwide deployment soon thereafter. Verizon Wireless' deployment will increase U.S. productivity, investment and jobs, and make us the clear worldwide leader in wireless broadband. Our investment in next generation broadband is also pushing other broadband providers (wireless, wireline, cable, etc.) to redouble their efforts to improve their service offerings as well.

Verizon Wireless prides itself on being the leader within the industry in consumer advocacy. We were the first carrier to embrace local number portability, which allows customers to switch from one carrier to another while keeping your telephone number. We were the first carrier to embrace open devices and applications, which allows customers to bring their own devices to our network. We were the first carrier to provide



VerDate Nov 24 2008 11:47 Jun 28, 2010 Jkt 056833 PO 00000 Frm 00129 Fmt 6633 Sfmt 6633 S:\GPO\HEARINGS\56833.TXT SJUD1 PsN: CMORC

56833.099

a *Worry-Free Guarantee* which allows customers to change their voice and data plans, selecting different minute allowances or text messaging and data use options, at any time during their contract without changing the end date of their contract or signing up for a new contract term. We were the first carrier to allow customers to receive a free phone every two years with our New Every Two program. In November 2006, we replaced the flat early termination fee we charged customers who cancel their service contract early with a declining balance fee that gets smaller every month that the customer stays with us (another first in the industry). When other wireless carriers proposed creating a 411 directory of wireless customers, we fought (and defeated) that proposal in order to protect our customers' privacy from unwanted calls.

**The Price of Text Messaging Overall Has Been Falling**

The title of today's hearing might lead one to believe that wireless carriers have been increasing text messaging prices, and that text message pricing trends bear on the level of competition in the industry overall. Let me respectfully suggest that since the evidence shows that text messaging prices have been decreasing rapidly, not increasing, text messaging pricing trends show – consistent with all other market evidence - that competition in the wireless industry remains vibrant.

I have included as an appendix to my testimony several charts that show the prices Verizon Wireless charges for text messaging and compare our prices to those of other wireless carriers. I have three summary points to make, relating to the level of our



VerDate Nov 24 2008 11:47 Jun 28, 2010 Jkt 056833 PO 00000 Frm 00130 Fmt 6633 Sfmt 6633 S:\GPO\HEARINGS\56833.TXT SJUD1 PsN: CMORC

56833.100

pricing, the direction of pricing, and the efforts Verizon Wireless makes to ensure customers are on the pricing plan that fits their needs.

1. Price level. The average price paid by our customers is now about 1 cent per text message. Most of our text messaging customers pay less than a penny per message.

2. Price direction. Prices are decreasing. In December 2006, the average price paid by our customers was about 3 cents per message. Since then we have cut the average price by almost two thirds, to about 1 cent per message. As a result of the price cuts, usage has grown six-fold. Generally the structure of our pricing plans has moved away from paying "by the drink" to buckets of messages at much lower prices. If you focus just on post-paid text messages sold individually without a plan: the sub-segment of the text messaging market that caused this stir, then those messages account for less than 1% of the text messages that Verizon Wireless provides.

3. Efforts to educate consumers about their choices. We work very hard to inform customers about the price plans that are the most appropriate for their needs. About 26% of our customers don't use texting at all; these customers don't need or want to pay for a monthly bucket of messages. On the other hand, for customers who use text messaging, we work hard to get them on the plan that will minimize their costs. We have an internal program called "High Usage Early" that even in the middle of a billing cycle identifies people whose usage indicates they are not on the right plan, and we contact those people to suggest they opt into a bucket plan that fits their current usage pattern. We have found that customers appreciate our actions since they are much less likely to get an unhappy surprise when the bill comes. The success of this outreach and our



VerDate Nov 24 2008 11:47 Jun 28, 2010 Jkt 056833 PO 00000 Frm 00131 Fmt 6633 Sfmt 6633 S:\GPO\HEARINGS\56833.TXT SJUD1 PsN: CMORC

56833.101

customer education effort is shown in part by the fact that our average *by-the-drink* text message customer is sending and receiving only about 21 texts per month, indicating that most subscribers are finding the best plan for themselves. We well know that if we don't do these types of activities for each of our customers, we may potentially lose them to a competitor and we want to keep our customers and attract more users to our service offerings.

Mr. Chairman, as you know, and members of the Subcommittee, as you may know, Verizon Wireless is a defendant in several private antitrust class action cases that allege that because some of the major wireless carriers raised their post-paid "by-the-drink" price to 20 cents, *there must be a conspiracy among the carriers*. Those claims are absolutely false. As you can see from the charts attached to my testimony, there is wide variation in the carriers' by-the-drink texting prices. If you are a pre-paid customer, then Verizon charges 1 cent, 5 cents, 10 cents or 20 cents per text message, depending on the plan. AT&T's pre-paid customers pay 20 cents per message. Sprint's pre-paid customers pay 10 cents per message or have all text messages included at no extra charge, depending on the plan. T-Mobile's pre-paid customers pay 5 cents on incoming messages and 10 cents on outgoing messages. There also is wide variation in the pricing of bundled text message plans which cover more than 99% of all text messages sent. For example, a customer who buys our lowest-priced package of messages for $5 per month gets 250 messages. For the same price, AT&T provides 200 messages; Sprint provides 300 messages; T-Mobile provides 400 messages. If you look at the charts attached to my testimony, it's apparent that the differences in pricing outnumber any similarities.



VerDate Nov 24 2008 11:47 Jun 28, 2010 Jkt 056833 PO 00000 Frm 00132 Fmt 6633 Sfmt 6633 S:\GPO\HEARINGS\56833.TXT SJUD1 PsN: CMORC

56833.102

Nor is there any coincidence in the timing of price changes for the narrow category of post-paid "by-the-drink" text messaging. Different carriers changed prices for this product over a period of almost two years. There was no collusion or price-fixing.

**Wireless Innovation and Competition Serves Consumers Well**

The market evidence shows fierce competition, not collusion, in text messaging and in wireless generally. This isn't just Verizon Wireless' own hard-won market experience. The Federal Communications Commission (FCC) concluded this year that "U.S. consumers continue to reap significant benefits – including low prices, new technologies, improved service quality, and choice among providers – from competition in the [wireless] marketplace." The FCC further noted that "[i]n the mobile telephone sector, we observe independent pricing behavior, in the form of continued experimentation with varying pricing levels and structures, for varying service packages, with various handsets and policies on handset pricing." Using the most recent information available to it, the FCC observed that the industry's average revenue per minute fell from 47 cents per minute in 1994 to 6 cents a minute in 2007, or a decline of 67%, while minutes of use has increased many-fold.

The FCC's findings are confirmed by other sources. A recent study found that the price per minute of service in the U.S. is the lowest among 26 OECD countries, that U.S.



VerDate Nov 24 2008 11:47 Jun 28, 2010 Jkt 056833 PO 00000 Frm 00133 Fmt 6633 Sfmt 6633 S:\GPO\HEARINGS\56833.TXT SJUD1 PsN: CMORC

56833.103

customers have the highest minutes of use per month, and that the U.S. has the most competitive market among those 26 countries.

The wireless industry's massive investments - $233 billion in its networks through June 2007, according to CTIA – are evidence of fierce competition to offer customers better quality, higher speed data services, and new or improved technologies such as GPS, video, music, picture messaging, and many other services. The benefits flowing from this intense, lightly-regulated competition are many:

**More jobs**: One study found that in 2006, approximately 3.6 million U.S. jobs were directly or indirectly dependent on the U.S. wireless industry, and that an additional 2-3 million jobs will be created in the next 10 years.

**Higher customer satisfaction**: During each month in 2008, the rate for complaints from Verizon Wireless's customers to the FCC, state PUCs, or state Attorneys General was about 8 complaints for every 1 million customers – a rate of only 0.0008%.

**More Choice**: Over 630 different handsets, manufactured by at least 33 companies, are sold in the U.S., and consumers have access to over 40,000 applications sold through numerous application stores.

**More Productivity**: Businesses from UPS to the utility industry depend on the mobile applications enabled by these massive, competitively-driven investments to make their employees more productive, use less fuel, keep supply chains functioning, and provide real-time customer response.



VerDate Nov 24 2008 11:47 Jun 28, 2010 Jkt 056833 PO 00000 Frm 00134 Fmt 6633 Sfmt 6633 S:\GPO\HEARINGS\56833.TXT SJUD1 PsN: CMORC

56833.104

**More of Everything**: The industry's massive investments in networks, applications and content have untethered consumers from their homes and offices. A wireless phone is a portal to Facebook, a music device, a television, a camera and much more.

Wireless companies do not need regulation to incent us to protect our customers – we do it on our own. Verizon Wireless has brought more than 20 lawsuits against spammers, telemarketers, pretexters and others who seek to deceive and defraud our customers. Last month, for example, Verizon Wireless filed civil suits against two companies harassing its customers by selling automobile warranties. We also reached a settlement with several other companies which committed to stop illegal spoofing and telemarketing in selling auto warranties, and we donated the settlement proceeds to charity. Verizon Wireless took these actions before the Federal Trade Commission brought its own lawsuits earlier this month against purveyors of these warranties.

**Conclusion**

An industry with little competition is an industry with glacial innovation, little investment, and increasing prices. That's not the wireless industry. To the contrary, wireless innovation is breathtaking, investment has been massive, and prices have relentlessly decreased overall. The wireless carriers are competing to attract customers by offering a wide variety of options at affordable prices. Verizon in particular continues to differentiate its services based on superior quality and high-speed wireless broadband service. Verizon Wireless, and the industry as a whole, could not have had this success



VerDate Nov 24 2008 11:47 Jun 28, 2010 Jkt 056833 PO 00000 Frm 00135 Fmt 6633 Sfmt 6633 S:\GPO\HEARINGS\56833.TXT SJUD1 PsN: CMORC

56833.105

or made the enormous investments they have without Congress' enactment of Section 332 of the Communications Act, as part of the 1993 Omnibus Budget and Reconciliation Act. This section preempts state *entry and rate* regulation, and its "light-handed" regulatory approach has helped create a vibrant marketplace with ever-expanding options for consumers. The wireless industry is a great success story, and I urge Congress to let it remain one.

I appreciate the opportunity to be here and I look forward to your questions.



VerDate Nov 24 2008 11:47 Jun 28, 2010 Jkt 056833 PO 00000 Frm 00136 Fmt 6633 Sfmt 6633 S:\GPO\HEARINGS\56833.TXT SJUD1 PsN: CMORC

56833.106

**Randal S. Milch**
**Executive Vice President and General Counsel**
**Verizon Communications**

Randal S. Milch is executive vice president and general counsel of Verizon. He leads the company's legal, regulatory and security groups.

From 2006 until being named to his current position in October 2008, Milch served as the senior vice president and general counsel of Verizon Business, responsible for all legal services and external affairs support for the company's global enterprise carrier. Before that, Milch served as the senior vice president and general counsel of Verizon's domestic telecom business. He was appointed to the latter position in 2000, upon the merger of Bell Atlantic and GTE.

Before the merger, Milch was associate general counsel at Bell Atlantic with oversight of state regulatory matters in New York and New England. Milch was responsible for all state legal aspects of gaining long-distance authority in New York, the first such authority for a Bell company in the nation. Milch also supervised the state regulatory litigation, including litigation arising under the Telecommunications Act of 1996, across Bell Atlantic's northern seven states. Previously, Milch served as vice president, general counsel and secretary of Bell Atlantic-Maryland, Inc. He began his telecommunications career as counsel to the Chesapeake and Potomac Telephone Company of Maryland in 1993.

Prior to his role with Bell Atlantic, Milch was a partner in the Washington, D.C., office of Donovan Leisure Newton & Irvine. Milch's practice centered on complex federal litigation and international arbitration. Milch began his legal career as a clerk to Clement F. Haynsworth, Jr., Chief Judge Emeritus of the United States Court of Appeals for the Fourth Circuit.

Milch holds a J.D. from New York University Law School and a B.A. from Yale University.

**October 2008**



56833.107

# The price of VZW text messages has fallen rapidly.

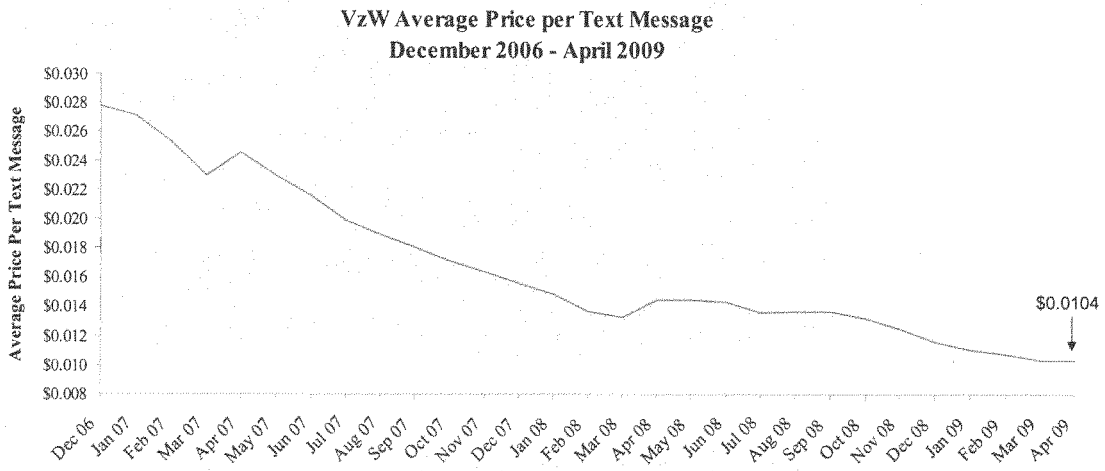


Source: VzW, Bureau of Labor Statistics.

Notes: Revenue used for calculations is based on actual price paid and actual messages used.
Monthly billing cycle calculations are adjusted for a constant 30.5 day month.



VerDate Nov 24 2008 11:47 Jun 28, 2010 Jkt 056833 PO 00000 Frm 00138 Fmt 6633 Sfmt 6633 S:\GPO\HEARINGS\56833.TXT SJUD1 PsN: CMORC

56833.108

# The volume of VZW text messages has grown rapidly.

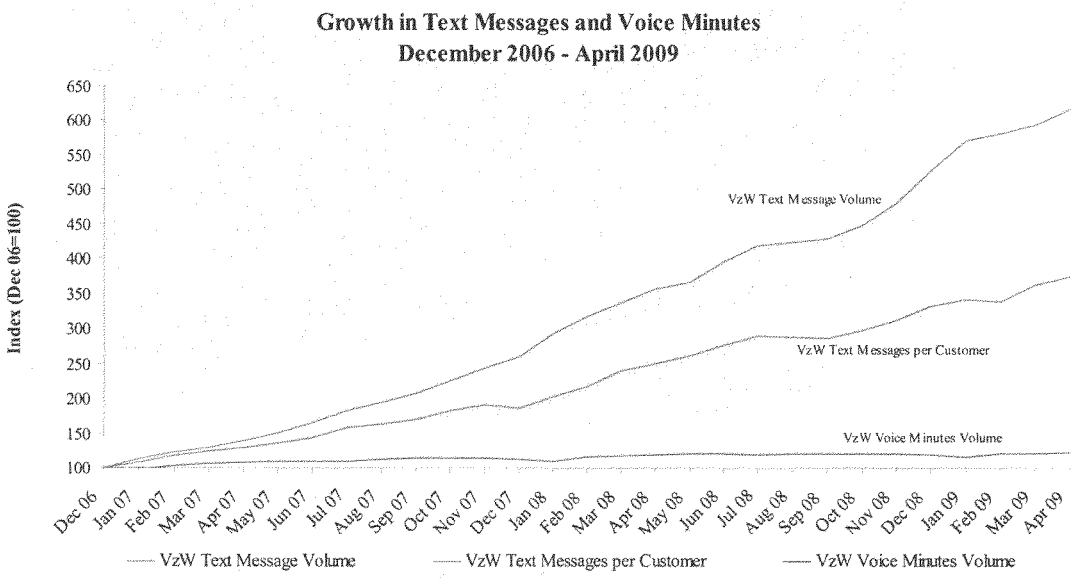


Source: VzW.

Notes: Monthly billing cycle calculations are adjusted for a constant 30.5 day month.



VerDate Nov 24 2008 11:47 Jun 28, 2010 Jkt 056833 PO 00000 Frm 00139 Fmt 6633 Sfmt 6633 S:\GPO\HEARINGS\56833.TXT SJUD1 PsN: CMORC

56833.109

# Verizon Wireless text messaging options

- Unlimited Messaging: $20 per month (individual)
  $30 per month (family)

- "Bucket" Plans (individual or per-line family):

| Messages | $ / Month | Unlimited "IN"? |
|---|---|---|
| 250 | 5 | No |
| 500 | 10 | Yes |
| 1500 | 15 | Yes |
| 5000 | 20 | Yes |

  Overage: $0.10 per message

- By the drink:
  - Postpaid Consumer: $0.20 per text message or instant message
    $0.25 per picture or video message
  - Prepaid Consumer: $0.01 - $0.20 per message
  - Business: $0.098 per message (average)

Notes: Based on currently marketed plans only.
Messages in bucket plans include text, instant messages, picture and video messages.
Prepaid consumer text prices vary depending on daily fee selected by customer: "basic" prepaid involves no daily fee and a $0.20 per-message fee; "core" prepaid involves $0.99 daily fee and $0.10 per-message fee; "plus" prepaid involves $1.99 daily fee and $0.05 per-message fee; "unlimited talk" prepaid involves $3.99 daily fee and $0.01 per-message fee. Daily fees apply to any day in which a customer uses voice, text, or other data services.



VerDate Nov 24 2008 11:47 Jun 28, 2010 Jkt 056833 PO 00000 Frm 00140 Fmt 6633 Sfmt 6633 S:\GPO\HEARINGS\56833.TXT SJUD1 PsN: CMORC

56833.110

# "By-the-drink" customers use text messages infrequently.

- 26% of Verizon Wireless customers do not text at all.
- By the drink consumers average 21 messages per month, while customers on bundle plans average 997 messages per month.

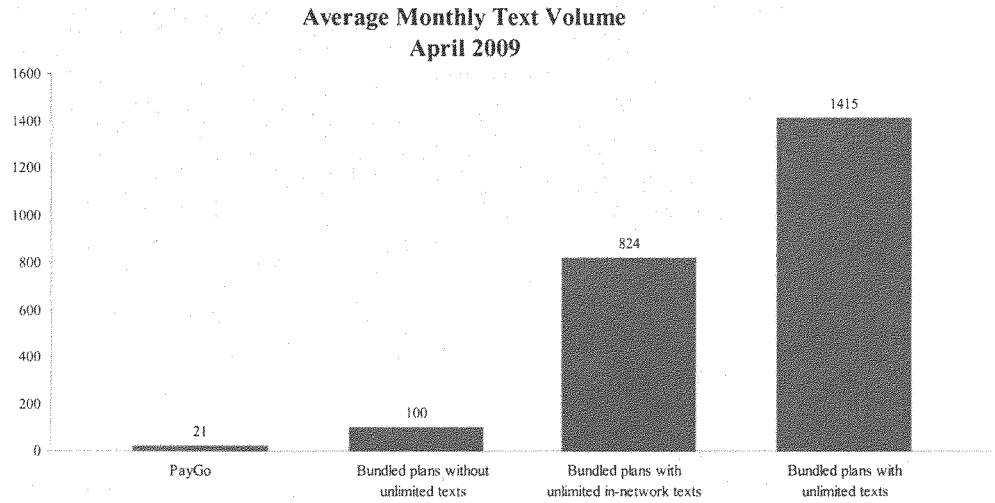


Source: VzW.
Note: Figures based on customers subscribing to ten most popular plans in each category, including plans no longer actively marketed by VzW.



VerDate Nov 24 2008 11:47 Jun 28, 2010 Jkt 056833 PO 00000 Frm 00141 Fmt 6633 Sfmt 6633 S:\GPO\HEARINGS\56833.TXT SJUD1 PsN: CMORC
56833.111

# Price comparisons – bucket plans.

There are substantial differences across wireless firms in the number of text messages included in bundled plans, and in the prices of "overage" messages.

| Monthly Access | Verizon Wireless | AT&T | Sprint | T-Mobile | US Cellular |
|---|---|---|---|---|---|
| $5 | 250 | 200 | 300 | 300 | 250 |
| $10 | 500 (unlimited in-network) | Not offered | Unlimited | 1000 | 750 |
| $15 | 1500 (unlimited in-network) | 1500 | Not offered | Unlimited | Not offered |
| $20 | Unlimited<br>5000 (unlimited in-network) | Unlimited | Not offered | Unlimited Family ($24.95) | Unlimited |
| $30 | Unlimited Family | Unlimited Family | Unlimited Family | Not offered | Unlimited Family |
| Overage | $0.10 | $0.10 ($5 plan)<br>$0.05 ($15 plan) | $0.20 | $0.20 | $0.25 |

Notes: Unless otherwise specified, numbers indicate plan limits for within-country SMS text messages, instant messages, picture or video messages.
$20 Verizon Wireless plan provides unlimited messages if customer is on select or premium voice plan.
Allotments indicated for US Cellular refer to outgoing text messages only (there is no limit on incoming messages), excluding picture and video messages.
Sprint unlimited packages are price differentials between plans with and without unlimited messaging; as an add-on to an existing plan, Sprint unlimited messaging costs $20.



VerDate Nov 24 2008 11:47 Jun 28, 2010 Jkt 056833 PO 00000 Frm 00142 Fmt 6633 Sfmt 6633 S:\GPO\HEARINGS\56833.TXT SJUD1 PsN: CMORC

56833.112

# Price comparisons – "by the drink."

Prices of pre-paid and post-paid text messaging plans vary widely.

| | Verizon | | | | AT&T | | Sprint/ Boost Mobile | | | T-Mobile | | US Cellular | | |
|---|---|---|---|---|---|---|---|---|---|---|---|---|---|---|
| | Pre-Paid | | | | | | | | | | | | | |
| Plan Name | Basic | Core | Plus | Unl. Talk | Simple | Unl. Calling | Minute | Daily | Monthly | Pay As You Go | Daily | Plan 1 | Plan 2 | Plan 1 + |
| Monthly Access | | | | | | | | | $50.00 | | | $6.00 | $10.00 | $20.95 |
| Daily Access | $0.00 | $0.99 | $1.99 | $3.99 | $0.00 | $3.00 | $0.00 | $1.00 | $0.00 | $0.00 | $1.00 | $0.00 | $0.00 | $0.00 |
| Voice Rate/Min | $0.25 | $0.10 | $0.05 | $0.00 | $0.25 | $0.00 | $0.10 | $0.10 | UNL | $0.10-$0.33 | $0.10 | $0.15 | $0.10 | $0.15 |
| Text Rate (in) | $0.20 | $0.10 | $0.05 | $0.01 | $0.20 | $0.20 | $0.10 | UNL | UNL | $0.05 | $0.05 | UNL | UNL | UNL |
| Text Rate (out) | $0.20 | $0.10 | $0.05 | $0.01 | $0.20 | $0.20 | $0.10 | UNL | UNL | $0.10 | $0.10 | $0.25 | $0.25 | UNL |
| | Post-paid | | | | | | | | | | | | | |
| PayGo Text/IM | $0.20 | | | | $0.20 | | $0.20 | | | $0.20 | | $0.25 | | |
| PayGo Multimedia | $0.25 | | | | $0.30 | | $0.03/kb | | | $0.20 | | $0.25 | | |

Source: VzW.
Notes: For Verizon Wireless, lower PayGo rates generally apply to business and government customers.
Postpaid voice rates refer to daytime weekday minutes, non-roaming, out-of-network.
Sprint postpaid plans are marketed through a wholly-owned subsidiary, Boost Mobile.
Postpaid VzW plans include unlimited in-network messaging.
T-Mobile prepaid voice rate for Pay As You Go plan depends on prepaid amount customer chooses.



VerDate Nov 24 2008 11:47 Jun 28, 2010 Jkt 056833 PO 00000 Frm 00143 Fmt 6633 Sfmt 6633 S:\GPO\HEARINGS\56833.TXT SJUD1 PsN: CMORC

56833.113

# Timing of postpaid "by-the-drink" price changes.

The timing of postpaid by-the-drink rate changes varied greatly across firms.

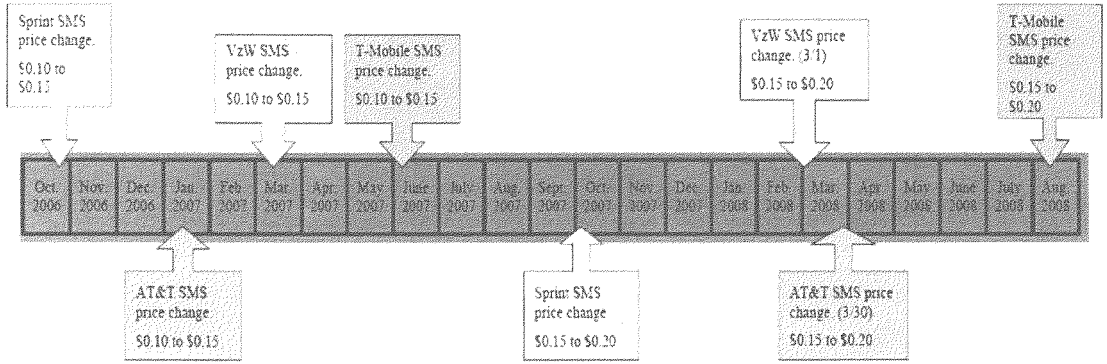




VerDate Nov 24 2008 11:47 Jun 28, 2010 Jkt 056833 PO 00000 Frm 00144 Fmt 6633 Sfmt 6633 S:\GPO\HEARINGS\56833.TXT SJUD1 PsN: CMORC

56833.114

**STATEMENT OF WAYNE WATTS**
**SENIOR EXECUTIVE VICE PRESIDENT & GENERAL COUNSEL**
**AT&T INC.**

**BEFORE:**

**SUBCOMMITTEE ON ANTITRUST, COMPETITION POLICY & CONSUMER RIGHTS**
**COMMITTEE ON THE JUDICIARY**
**UNITED STATES SENATE**

**HEARING ON CELL PHONE TEXT MESSAGING RATE INCREASES**
**AND THE STATE OF COMPETITION IN THE WIRELESS MARKET**

**June 16, 2009**

This hearing is the culmination of a process that began with Senator Kohl's initial inquiry letter to our Chairman and CEO regarding the pricing for wireless text messaging services. The letter, which focused on a single pricing option for text messaging services that represents a de minimus portion of overall text messaging sales, had the unintended consequence of spawning extensive – albeit spurious – litigation. Understandably, then, we look forward to discussing with you the competition that characterizes the wireless industry generally and text messaging services in particular.

Text messaging services reflect the dynamic and competitive nature of today's wireless industry. At the same time that use of the service has grown exponentially – with texting volume increasing 600% in just the past two years – prices for text messaging have fallen dramatically – over 60% over that same time. That is, the text message segment of the marketplace is characterized by the very hallmarks of a competitive market: rapidly falling prices and increased output and demand. AT&T has, thus, made available to millions of consumers a service that is transforming, in an effective and affordable fashion, the very means by which they communicate. Families are more connected; businesses have a new tool to disseminate critical information



56833.115

rapidly and efficiently to employees and customers; and, all the while, the prices for this transforming service have fallen off a cliff.

To begin, pricing for text messaging should be evaluated in the context of the broader competitive dynamics of the wireless industry. Today's wireless industry is intensely competitive.[1] According to the FCC's latest statistics, more than 95 percent of the U.S. population lives in census blocks with at least three competing wireless carriers, and more than half of the population lives in census blocks with at least five competing carriers.[2] The FCC continues to make additional spectrum available, and major new providers, such as Clearwire and the cable companies, continue to enter the wireless market. As the FCC's detailed annual reports to Congress time-and-again confirm, the wireless marketplace is and will remain effectively competitive.[3] In fact, as a recent study shows, the U.S. enjoys the *least* concentrated wireless industry of any major industrial country.[4]

Because of this intense competition, output continues to soar and prices continue to fall. There are now 270 million wireless subscribers in the United States, and in 2008 they used more than 2.2 *trillion* minutes – a tenfold increase since 2000.[5] At the same time, prices have declined precipitously. Average revenue per minute has fallen 89 percent since 1994, and U.S. wireless prices are much lower than in any other major industrialized country in the world.[6]

---

1 Just this past April, former Vice President Al Gore, speaking at the annual conference of CTIA-The Wireless Association, called the U.S. mobile sector "the most competitive wireless industry of any nation in the world--because of competition, we're seeing the continued pulse of investment to expand the capacity of our networks."

2 Thirteenth Report, *Implementation of Section 6002(b) of the Omnibus Budget Reconciliation Act of 1993; Annual Report and Analysis of competitive Market Conditions With Respect to Commercial Mobile Services*, WT Docket No. 08-27, ¶ 2 (January 15, 2009) ("*Thirteenth Report*").

3 *Thirteenth Report*, ¶ 2.

4 *See The United States and World Wireless Markets: Competition and Innovation are Driving Wireless Value in the U.S.*, Presentation by CTIA-The Wireless Association at 6-7 (submitted in FCC WC Docket Nos. 09-51, May 12, 2009) ("*CTIA Study*").

5 *CTIA Study* at 4, 9.

6 *CTIA Study* at 3, 9; *Thirteenth Report*, ¶ 192.



VerDate Nov 24 2008 11:47 Jun 28, 2010 Jkt 056833 PO 00000 Frm 00146 Fmt 6633 Sfmt 6633 S:\GPO\HEARINGS\56833.TXT SJUD1 PsN: CMORC

56833.116

Consumers are also getting far more value for their wireless dollars than they did even a few years ago. Carriers, device manufacturers, and operating system and applications developers compete fiercely to provide consumers with an increasingly broad array of new features, functions and capabilities. This is especially true of wireless broadband services. Carriers have invested tens of billions of dollars in recent years to upgrade their networks to increase speeds and to support a wave of revolutionary new broadband devices and applications. Americans today do not just talk on their wireless "phones" – they surf the Internet, listen to music, send emails, edit documents, use GPS-enabled features, watch videos, play games, and much more.

The wireless industry is just beginning to tap these possibilities. Seemingly every month, a new and innovative wireless device bursts onto the scene, from the Amazon Kindle – a wireless e-reading device that does not even support voice calls – to wireless mini-laptop computers, medical monitoring devices, and specialized devices tailored to the needs of particular businesses. AT&T alone currently supports specialty devices from more than 100 manufacturers. Because of this intense competition and furious pace of innovation, wireless services are transforming American life.

Against this backdrop of white-hot competition, we can put to rest an underlying implication of the subcommittee's inquiry into this matter – that the national wireless providers may have conspired to fix prices for text messaging. As the subcommittee is likely aware, after Senator Kohl sent his initial inquiry letter, some 37 separate class action lawsuits were filed around the country against AT&T and the other national wireless carriers, specifically alleging price-fixing for text messaging services. Indeed, the first such complaint was filed the day after Senator Kohl's letter was delivered to AT&T. None of the complaints alleges any time, place, or persons involved in the supposed collusion, and all but one cites Senator Kohl's letter as a



VerDate Nov 24 2008 11:47 Jun 28, 2010 Jkt 056833 PO 00000 Frm 00147 Fmt 6633 Sfmt 6633 S:\GPO\HEARINGS\56833.TXT SJUD1 PsN: CMORC

56833.117

principal basis for the allegations made. Especially in light of this litigation firestorm, we want to make it perfectly clear that AT&T sets the prices for all of its products on a unilateral basis. There is no evidence to support an accusation that anyone at AT&T engaged in any inappropriate, much less illegal, behavior as alleged in these lawsuits. AT&T reached its decision to alter the prices for its text message product based on a reasoned, independent analysis of the marketplace, how these prices fit into the full suite of our product offerings, the state of competitors' prices and pricing structures, and other factors. The allegations in the complaints are patently false.

The faulty notion that prices for text messaging have risen derives from an unduly narrow interest in the trend of a single pricing option for text messaging services – the pay-per-use option – when the vast majority of AT&T's customers do not choose that option. "Pay per use" – or "PPU" – refers to the charge for individual text messages that customers purchase on a single-message, no-minimum-monthly-charge basis. In fact, *less than 1% of AT&T's postpaid text messaging volume is handled on a PPU basis*. Instead, the vast majority of our customers take advantage of AT&T's multiple messaging pricing plans, including those that provide a package of messages for a flat monthly rate. These plans include: 200 messages per month for $5.00, for an effective rate of 2.5 cents per message; 1500 messages per month for $15.00, for an effective rate of 1 penny per message; and unlimited messages for $20.00. For $30.00 per month, families can enjoy unlimited text messaging. With these plans, AT&T provides its customers – from the casual to the heavy user – with a number of low cost options to meet their text messaging needs. Indeed, the fact that 99% of all text messages sent or received by AT&T customers are covered by one of these packages is a testament to the value that consumers see in and derive from our monthly plans. As a result, the overall effective rate per message has



VerDate Nov 24 2008 11:47 Jun 28, 2010 Jkt 056833 PO 00000 Frm 00148 Fmt 6633 Sfmt 6633 S:\GPO\HEARINGS\56833.TXT SJUD1 PsN: CMORC

56833.118

plummeted, dropping from $0.043 in January 2007 to $0.014 in March 2009 – an almost 70% decline in just over two years. At the same time, the volume of text messages handled by AT&T has grown exponentially. In January 2007, AT&T processed 4.5 billion text messages. In January 2009, it processed 31.1 billion text messages. That represents nearly a 600% increase in two years.[7] Thus, the PPU price, which represents a de minimus portion of the total number of text messages, has increased, but overall rates – the rates that the vast majority of our customers pay – have plummeted.[8]

In making these package plans the core of our text messaging pricing, we are delivering maximum value to our customers. In our experience, the PPU pricing option often results in large and unpredictable swings in a customer's total bill, leading to significant customer dissatisfaction and complaints to our customer care lines. Package plans ensure extremely low prices, choice, predictability, and easy-to-understand bills, and thereby greatly improve the overall customer experience. That is, we saw that demand for text messaging was exploding; did not want our customers to suffer unexpectedly large or constantly changing monthly bills; and fixed the potential problem of unhappy customers by avoiding them in the first place. Now, the overwhelming majority of our customers purchase text message packages, and most of them pay pennies or less than a penny per message.

By contrast, the pay-per-use option is designed for the rapidly diminishing group of infrequent users of text messaging. AT&T's current price is 20 cents for each text message.

---

[7] Americans as a whole sent more than one trillion wireless text messages in 2008 – triple the amount in 2007.

[8] One of the myths surrounding this issue is that the four national carriers increased their prices for their respective PPU pricing options in automatic lockstep. In fact, seven months elapsed from the time Sprint increased its PPU price from $0.10/message to $0.15/message to when T-Mobile increased its PPU price. More than ten months passed from when Sprint increased its rate from $0.15/message to $0.20/message to when T-Mobile increased its rate. But, regardless of the timing, the fact that different companies may charge similar prices under a single pricing option does not demonstrate any unlawful act. Rather, it is an established axiom of law and economics that the mere fact that companies offer similar (or even the same) prices for similar products does not establish, or even fairly suggest, a price-fixing claim.



VerDate Nov 24 2008 11:47 Jun 28, 2010 Jkt 056833 PO 00000 Frm 00149 Fmt 6633 Sfmt 6633 S:\GPO\HEARINGS\56833.TXT SJUD1 PsN: CMORC

56833.119

This rate has been in effect since March of 2008. Prior to March, a rate of 15 cents per message had been in effect since January 2007, and prior to that, it stood at 10 cents per message. Because we know how valuable the package plans can be for our customers, we have designed an overall pricing structure that encourages customers to take a hard look at the packages and, in the end, our customers have benefitted from ever-decreasing effective rates.

Moreover, contrary to the false claim of collusion, the carriers are delivering value to consumers by giving them a wide range of choices. The carriers are differentiating themselves and competing fiercely on many levels, including the manner in which they offer their text message packages. Just by way of example:

- For $5/month, Verizon offers 250 messages, but T-Mobile and Sprint offer 300.
- For $20/month, AT&T offers unlimited messages, whereas T-Mobile offers unlimited messages for $15/month.
- Sprint's family text-message plan is priced at $30/month and includes extra voice minutes, whereas T-Mobile's family price is $25/month, with no extra voice minutes.
- In addition, Sprint offers an unlimited voice-and-text plan at $50/month through its Boost product.

And the list goes on. The point is that, even in the realm of text messaging services, the carriers offer customers a wealth of choices to fit their specific needs and budgets. The fact that the price for one lightly-used pricing option – PPU – is today the same across the carriers is therefore entirely meaningless.[9]

---

[9] Notably, pricing and product differentiation is not cost free. It requires, among other things, significant marketing effort and expense. For this reason, a carrier cannot reasonably differentiate itself from all of its competitors in connection with every possible product, price or pricing option; trying to do would stymie the carrier's efforts to compete aggressively with respect to what really matters to consumers and drives their choices. Here, given that PPU messaging is such a minute part of the overall product offering of text messaging services, AT&T has chosen, for the moment, not to differentiate itself from its competitors on the single factor of its PPU pricing option.



VerDate Nov 24 2008 11:47 Jun 28, 2010 Jkt 056833 PO 00000 Frm 00150 Fmt 6633 Sfmt 6633 S:\GPO\HEARINGS\56833.TXT SJUD1 PsN: CMORC

56833.120

We trust that this more complete picture of the way that text messaging services are offered and priced puts to rest any concerns about a single pricing option and dispels any notion that AT&T's decision to offer that option resulted from any improper activity.



VerDate Nov 24 2008 11:47 Jun 28, 2010 Jkt 056833 PO 00000 Frm 00151 Fmt 6633 Sfmt 6011 S:\GPO\HEARINGS\56833.TXT SJUD1 PsN: CMORC

56833.121