federal register

Tuesday
August 31, 1999

Part II

Department of Transportation

National Highway Traffic Safety Administration

49 CFR Part 571

Federal Motor Vehicle Safety Standards; Child Restraint Systems; Child Restraint Anchorage Systems; Final Rule

DEPARTMENT OF TRANSPORTATION

National Highway Traffic Safety Administration

49 CFR Part 571

[Docket No. NHTSA–99–6160]

RIN 2127–AH65

Federal Motor Vehicle Safety Standards; Child Restraint Systems; Child Restraint Anchorage Systems

AGENCY: National Highway Traffic Safety Administration (NHTSA), Department of Transportation.

ACTION: Final rule, response to petitions for reconsideration.

SUMMARY: This document responds to some of the issues raised by petitions for reconsideration of a March 1999 final rule establishing Federal Motor Vehicle Safety Standard No. 225, Child Restraint Anchorage Systems. The standard requires vehicle manufacturers to install the upper (tether) anchorages of universal child restraint anchorage systems, beginning September 1, 1999, and lower anchorages of those systems beginning September 1, 2000. This fall, we plan to publish a second document responding further to the petitions.

In response to concerns of several petitioners about leadtime for and the stringency of the anchorage strength and other requirements in the March 1999 final rule, this document permits vehicle manufacturers to meet alternative requirements during an initial several year period. During this period, manufacturers have the alternative of meeting either the requirements in the March 1999 final rule or the less stringent Canadian requirements for tether anchorages, and those set forth in a draft standard being developed by a working group of the International Organization for Standardization (ISO) for lower anchorages. The temporary alternative for tether anchorages lasts until September 1, 2001, and that for lower anchorages until September 1, 2002.

This document also clarifies the test procedures used to test tether anchorages and the lower child restraint anchorage systems; excludes shuttle buses from the standard; denies petitions from the Coalition of Small Volume Automobile Manufacturers and Indiana Mills and Manufacturing; and makes technical amendments to correct some of the figures and other portions of the March 1999 final rule, including amendments to Standard No. 213.

DATES: The amendments made in this rule are effective September 1, 1999.

Petitions for reconsideration of this rule must be received by October 15, 1999.

ADDRESSES: Petitions for reconsideration should refer to the docket number of this document and be submitted to: Administrator, Room 5220, National Highway Traffic Safety Administration, 400 Seventh Street SW, Washington, DC, 20590.

FOR FURTHER INFORMATION CONTACT:

For nonlegal issues: George Mouchahoir, PhD., (202–366–4919), Office of Crashworthiness Standards, NHTSA.

For legal issues: Deirdre R. Fujita, Esq., Office of the Chief Counsel (202–366–2992), NHTSA.

Both of these officials can be reached at the National Highway Traffic Safety Administration, 400 Seventh St., SW, Washington, DC, 20590.

SUPPLEMENTARY INFORMATION:

I. Summary of March 1999 Final Rule
a. Final rule
b. Key implementation dates
c. Rationale for the compliance dates for the final rule
II. Petitions for Reconsideration of Final Rule
III. Response to Petitions
a. Universal child restraint anchorage systems for motor vehicles
1. Leadtime
A. Tether anchorage
B. Lower anchorages
C. General issues about the options
2. Harmonization
3. Notice and opportunity to comment
4. Other issues
A. Procedures for testing tether anchorages
B. Issues relating to the application of the standard
C. Written instructions
b. Requirements for child restraints relating to September 1, 1999 compliance date
1. Audible or visual indication of attachment
2. Attachments must be permanent
c. Reasons for the effective date of this rule
IV. Corrections to Final Rule
V. Rulemaking Analyses and Notices
a. Executive Order 12866 (Federal Regulation) and DOT Regulatory Policies and Procedures
b. Regulatory Flexibility Act
c. Executive Order 12612
d. Unfunded Mandates Reform Act
e. National Technology Transfer and Advancement Act
f. National Environmental Policy Act
g. Executive Order 12778 (Civil Justice Reform)
h. Paperwork Reduction Act

I. Summary of March 1999 Final Rule

a. Final Rule

On February 27, 1999, President Clinton announced a new motor vehicle safety standard to improve the installation of child restraints in motor vehicles. The new rule, published by NHTSA on March 5, 1999, requires the installation of universal systems for attaching child restraints in vehicles (64 FR 10786). Most vehicles will be required to have these systems at two rear seating positions. Each system will have three anchorages: two lower anchorages and one upper anchorage. The lower anchorages are two 6 mm round steel bars fastened to the vehicle roughly a foot apart and positioned where the vehicle seat cushion and seat back meet. The upper anchorage is a ring to which the upper tether of a child restraint can be attached. In addition, an upper anchorage will be required at a third seating position. New child seats will have components that snap or hook onto these anchorages. By requiring an easy-to-use anchorage system that is independent of the vehicle seat belts, the new rule makes it easier to install child restraints securely and will thereby increase safety for children.

To the extent consistent with safety, we sought to harmonize our rule with requirements being considered by standard bodies and regulatory authorities in Europe and elsewhere. We considered a number of alternatives to the anchorage system we ultimately adopted, including anchorage system designs developed by General Motors and by Cosco, a child restraint manufacturer. Ultimately, we chose to establish performance requirements that were based on a draft standard [1] developed by the International Organization for Standardization (ISO), a worldwide voluntary federation of ISO member bodies. While safety was the overriding consideration, we made this decision due, in part, to the global standardization advantages associated with a harmonized standard. We stated that we anticipated that the ISO, which began work on an independent child restraint anchorage system in the early 1990's, will be adopting the draft standard as a final standard within the next year, and that incorporation of the ISO standard into the regulations of the European Community is likely to follow. Our rule harmonized also with a regulatory initiative by Transport Canada to require user-ready tether anchorages in vehicles sold in Canada.

In our final rule, we adopted most of the draft ISO standard for the lower bars and most of the requirements of the Canadian requirements for the tether anchorages. However, our final rule also imposed strength requirements for tether anchorages and the lower bars that, while essentially equivalent to the

[1] ISO/DIS 13216–1, Road vehicles—Child restraint systems—Anchorages in vehicles and attachments to anchorages—Part 1: Dimensions, strength requirements and general requirements, June 22, 1998.

requirements we proposed in our NPRM, are higher than those that are specified by the draft ISO and the Canadian standards.

Tether Anchorage

The NPRM proposed that the tether anchorage would be tested in a static pull test. A force of 5,300 Newtons (N) would be applied by a belt strap that attaches to the tether anchorage, and applied in the forward horizontal direction. The 5,300 N force would be attained within 30 seconds, with an onset force rate not exceeding 135,000 N per second, and maintained at the 5,300 N level for one second. We proposed that each structural component of the anchorage must withstand the 5,300 N force, and that there must not be any complete separation or failure of any anchorage component. Each tether anchorage would be tested separately. However, if two or more designated seating positions on a bench seat are equipped with a tether anchorage, separate 5,300 N forces would be simultaneously applied to each tether anchorage.

The final rule adopted a static pull test using a test fixture, instead of a belt strap, to apply the test forces to the tether anchorage. The fixture has a configuration representative of a child restraint system. The fixture is attached to the tether anchorage at the fixture's top, and is attached to the vehicle seat at the fixture's bottom end (at the intersection of the vehicle seat cushion and back) using the vehicle's seat belt or the lower bars of a child restraint anchorage system. The test force is applied pulling on a cable that is attached to a point on the fixture. A force of 15,000 N is applied to the fixture, which in turn, applies the force to the three anchorage points (the tether anchorage and the seat belt anchorages or the lower bars). Since the fixture is attached to three anchorage points, only a portion of the 15,000 N force is actually applied to the tether anchorage. The 15,000 N force is attained within 30 seconds, at an onset force rate of not more than 135,000 N per second; and maintained at the 15,000 N level for one second. The final rule requires that (a) there must not be any point on the tether anchorage displaced more than 125 millimeters (mm) (approximately 5 inches); and (b) there must not be complete separation of any anchorage component. Each tether anchorage is tested separately, unless two or more designated seating positions in a row of seats have a tether anchorage. In that case, NHTSA has the option of testing both tether anchorages simultaneously.

Lower Anchorages

The NPRM proposed that the lower anchorages would also be tested in a static pull test using a belt strap. Each lower anchorage at a seating position would be tested separately from the other. A force of 5,300 N would be applied to the anchorage in the forward horizontal direction. The 5,300 N force would be attained within 30 seconds, with an onset force rate not exceeding 135,000 N per second, and maintained at the 5,300 N level for ten seconds. The NPRM proposed that lower bars conforming to the draft ISO standard were one of the means that could be installed to meet the requirement to provide the lower anchorages of a child restraint anchorage system. The NPRM proposed requiring that no portion of any component attaching to the lower bar could move forward more than 125 mm, and that there must not be complete separation of any anchorage component.

The final rule required that bars be used as the lower anchorages and adopted the method of testing lower bars set forth in the draft ISO standard. That method uses a test fixture, representing a child restraint system, that has attachments at the bottom end of the fixture (at the intersection of the vehicle seat cushion and back) to attach to the lower bars. The test force is applied by pulling on a cable that is attached to a point on the fixture. A horizontal force of 11,000 N is applied to the fixture, which in turn, simultaneously applies the force to the two lower bars (the tether anchor is not attached). Since the fixture is attached to both bars, the force is divided between them. The 11,000 N force is attained within 30 seconds, at an onset force rate of not more than 135,000 N per second; and maintained at the 11,000 N level for ten seconds. The final rule requires that the lower bars must not allow a specified point on the test fixture to be displaced more than 125 mm during the pull. The final rule specifies that in the case of vehicle seat assemblies equipped with more than one child restraint anchorage system, NHTSA has the option of testing the child restraint anchorage systems simultaneously or testing the systems separately.

b. Key Implementation Dates

The key implementation dates (mandatory compliance dates) in the March 1999 final rule were:

1. Beginning September 1, 1999—

Motor vehicles

Eighty (80) percent of passenger cars must have a tether anchorage for each of a specified number of designated seating positions. Any voluntarily-provided lower bars of a child restraint anchorage system, and any voluntarily-provided additional tether anchorages, in any passenger car, light truck, bus and multipurpose passenger vehicle (MPV) must meet the strength and other requirements of the standard.

Child restraints

Child restraint systems are required to comply with a more stringent head excursion performance requirement. Effectively, this means most must have top tether straps.

2. Beginning September 1, 2000—

Motor vehicles

All passenger cars and light trucks, buses and multipurpose passenger vehicles (MPVs) must have specified number of tether anchorages.

A specified percentage of passenger cars, and light trucks, buses and MPVs must have lower anchorages.

3. On or after September 1, 2002—

Motor vehicles

All passenger cars, and all light trucks, buses and MPVs must have the new lower anchorages for a specified number of seating positions.

Child restraints

Child restraint systems must have components that attach to the lower bars.

c. Rationale for the Compliance Dates for the Rule

Our effective dates for requiring the universal child restraint anchorages balanced several real world needs. Manufacturers need lead time to develop and implement designs for the anchorage system, particularly those for the lower bars, and to test their vehicles for compliance with the standard and to so certify. However, we wanted manufacturers to begin to provide the anchorages as quickly as possible because a universal child restraint anchorage system will enhance the safety of child restraints by making them easier to install securely than by means of a vehicle's seat belt system. Our rule sought to balance those needs by:

(1) Phasing-in the requirement for the lower bars over a three-year period, beginning in 2000 (S4.3); and

(2) Requiring manufacturers to begin providing the user-ready upper anchorages on September 1, 1999 (S4.2).

We believed that the requirement for user-ready upper anchorages could be

implemented in most passenger cars [2] beginning September 1, 1999 and a year later in other types of vehicles because almost all new vehicles sold in this country already have (unexposed, non-user-ready) tether anchorages to meet a longstanding Canadian requirement for non-user-ready anchorages. We also selected the September 1, 1999 date because it is the compliance date that Canada had adopted for user-ready tether anchorages in new passenger cars sold in that country.

Another need addressed by our implementation dates for the final rule was to assure that any child restraint anchorage system or tether anchorage installed in a vehicle will meet minimum performance requirements, regardless of whether the system was a ''required system'' or a ''voluntarily-installed system.'' This was done to ensure that all of the 3-point child restraint anchorage systems provide at least a minimum level of safety. Accordingly, we required that:

(3) any child restraint anchorage system or tether anchorage installed in any new vehicle after September 1, 1999, must meet the configuration, location and strength requirements of the standard (S4.1).[3]

II. Petitions for Reconsideration of Final Rule

We received petitions for reconsideration of the final rule from the Alliance of Automobile Manufacturers (''Alliance'') (whose members are BMW, DaimlerChrysler, Ford, General Motors, Mazda, Nissan, Toyota, Volkswagen, Volvo, Fiat and Isuzu), and from Honda, Volkswagen, Porsche, DaimlerChrysler, General Motors, Mitsubishi, the National Truck Equipment Association, Kolcraft, E-Z-On Products, Cosco, Toyota, Ford, the Coalition of Small Volume Automobile Manufacturers, and Indiana Mills and Manufacturing. *See* NHTSA Docket No. 98–3390, Notice 2.

The petitioners generally embrace the underlying tenet of the rule that there is a need for tether anchorages and universal child restraint anchorage systems to improve the securement of child restraints in vehicles. Nevertheless, vehicle manufacturers ask us to reconsider certain performance and other requirements. Some of them are concerned about the strength requirements for the tether anchorage and the lower bars, and assert that: (1) There is no safety need for requirements as stringent as those specified; [4] (2) tether anchorages installed in their model year (MY) 2000 vehicles were designed to meet the less stringent Canadian requirements and they will not be able to meet the requirements in the final rule by September 1, 1999; (3) they are unable to assure that voluntarily-installed anchorages planned for their MY 2000 vehicles will meet the requirements by September 1 of this year, and thus would have to ''tear out'' voluntarily-installed additional anchorages that they had already installed in vehicles slated for completion after September 1, 1999; and (4) sufficient notice and opportunity to comment was not provided for the requirements. The Alliance suggests that the agency either adopt the Canadian requirements for the tether and the draft ISO requirements for the lower bars, or delay the effective date for the rule to allow manufacturers to modify their current anchorage designs. These and the other petitioners also petition for reconsideration of a number of other issues, including issues regarding the specific test procedures of the rule and the application of the requirements to particular types of vehicles or seating positions.

III. Response to Petitions

This document focuses on immediate problems that vehicle manufacturers are having in certifying compliance with requirements that will apply to them beginning on September 1, 1999. As noted above, that is the date on which they must begin equipping new passenger cars with tether anchorages meeting the configuration, location, strength and marking requirements in the March 1999 final rule. It is also the date on which voluntarily-installed tether anchorages and lower anchorage bars must meet those requirements. This document also addresses some other concerns as well, including suggestions for clarifying certain steps and procedures for testing the anchorages and requests to reconsider requirements of the final rule for child restraint systems. We will respond to the remaining issues raised in the petitions in separate documents that will be published in the near future.

The key changes to those implementation dates made by today's final rule are as follows:

- *From September 1, 1999 to August 31, 2001:* tether anchorages may meet strength and other requirements (i.e., those specifying where anchorages may be located, and how many must be provided in vehicles and in what seating positions they must be provided) promulgated by Transport Canada instead of the requirements set forth in the March 1999 final rule. This option will cease to be available on September 1, 2001.
- *From September 1, 1999 to August 31, 2002:* lower anchorage bars may meet strength and other requirements (i.e., those specifying anchorage dimension and location, stow ability, and marking) set forth in a draft standard issued by the ISO instead of the requirements set forth in the March 1999 final rule. This option will cease to be available on September 1, 2002.

a. Universal Child Restraint Anchorage Systems for Motor Vehicles

1. Leadtime

As noted above, two requirements relating to child restraint anchorage systems go into effect on September 1, 1999: (a) manufacturers of passenger cars must provide the user-ready tether anchorages; [5] and (b) manufacturers must ensure that any tether anchorage or child restraint anchorage system installed in any new vehicle, voluntarily or pursuant to the standard, meets the configuration, location, strength and marking requirements of the standard (S4.1).

The Alliance petitioned for reconsideration of the rule on the basis of the practicability of meeting the September 1, 1999 effective date requiring installation of user-ready tether anchorages in passenger cars, stating that they cannot, by that date, complete the testing that they need to do to certify that their vehicles will meet the requirements of the final rule. They also need more time to make interior trim and structural changes to the extent necessary to meet the strength requirements. The Alliance states that member companies had geared up to meet the Canadian requirements, and had completed certification testing in passenger cars in preparation for certifying to the same requirements in

[2] The requirements are phased-in to apply to 80 percent of a manufacturer's production of passenger cars manufactured between September 1, 1999 and August 31, 2000, and to all passenger cars manufactured on or after September 1, 2000.

[3] Today's document also corrects S4.1 to include marking requirements among those that voluntarily-installed anchorage systems must meet.

[4] Not all petitioners addressing this subject believe the strength requirements were too stringent. Petitioner E-Z-On Products suggest in its petition for reconsideration that we should consider *increasing* the strength requirements for the tether anchorage.

[5] The requirement for passenger cars is phased-in, beginning September 1, 1999, with all cars required to meet the requirement as of September 1, 2000. The compliance date for installing user-ready tether anchorages in light trucks, multipurpose passenger vehicles, and buses is September 1, 2000.

the U.S.[6] The Alliance states that the strength requirements of our rule necessitate vehicle structure and interior trim changes and that these involve ''significant tooling and lead time'' to implement. Thus, many of their passenger car tether anchorage designs cannot be modified in time to meet the compliance date. The Alliance suggests that the agency either (a) Adopt the Canadian requirements for the tether and the draft ISO requirements for the lower bars, or (b) ''at a minimum delay the effective date for tether and child restraint lower anchors for one year to allow manufacturers time to modify their current anchor designs to meet these new, unique requirements.''

In addition, petitioners state that practicability problems arise also from the requirement in S4.1 that manufacturers must ensure that any tether anchorage or child restraint anchorage system voluntarily installed in any new vehicle after September 1, 1999 meets the performance requirements of the standard. The Alliance states that member companies had completed certification testing in multipurpose passenger vehicles, trucks and buses to comply voluntarily with the tether anchorage requirements earlier than the September 2000 compliance date. Because the voluntarily-installed anchorages would not meet the standard's requirements by September 1, 1999 as they are required to under S4.1, some manufacturers would be forced to remove anchorages in vehicles that will be completed after September 1, 1999, or prevented from installing such anchorages in those vehicles, ''thus depriving customers of [the anchorages'] safety benefit.'' Volkswagen (VW) states in its separate petition that it already provides lower anchorages designed to the draft ISO standard in its vehicles. That petitioner states: ''if NHTSA * * * continues to maintain the requirement in S4.1, then the provision of the systems would have to be terminated.'' VW and the Alliance suggest that S4.1 be amended so that voluntary systems complying with the draft ISO standard[7] (for the lower bars) and with Canadian requirements (for the tether anchorage) are permitted.

A. Tether anchorage. NHTSA has reviewed the issues raised by the petitioners relating to whether it is practicable to meet the September 1, 1999 effective date for installing tether anchorages that satisfy the requirements of the March 1999 final rule. The agency concludes that the vehicle manufacturers are capable of meeting the strength requirements in our March 1999 final rule for the tether anchorage with sufficient leadtime. In fact, data from Transport Canada indicates that many vehicles already have tether anchorages that can meet the 15,000 N requirement. Transport Canada tested a series of 15 vehicles (1999 models), using the test procedures of its tether anchorage standard, Canadian Motor Vehicle Safety Standard (CMVSS) 210.1, to measure loads attained at tether anchorages of these vehicles. Tether anchorages of 12 of these vehicles did not fail when the applied load (applied by means of a belt strap) reached a load ranging from 7,450 N to 7,884 N. We have determined that applying a horizontal 15,000 N force to the SFAD test fixtures results in forces of about 5,400 N applied horizontally to the tether anchorage using SFAD 1, and about 7,000 N applied horizontally to that anchorage using SFAD 2. (The difference is primarily due to differences between SFAD 1 and SFAD 2 as to the location of Point X on the test devices. Point X is where the force is applied to the SFAD.) Thus, tether anchorages on most of the vehicles tested by Canada sustained loads greater than the load that is specified in our March 1999 final rule. Tether anchorages of three of the 15 vehicles tested by Canada sustained between 6,979 N to 7,385 N. The tether anchorages on these vehicle may or may not need to be reinforced to meet our requirement. (These data were presented by Transport Canada at a March 31, 1999 meeting with manufacturers in Ottawa.)

While many vehicles may already meet the strength requirement of the March 1999 final rule, a number of manufacturers have said that they need time to run certification tests and analyses based on the requirements of our final rule, as opposed to the Canadian requirements. Some vehicle structure and trim might also have to be changed to meet the strength requirements of the final rule. Thus, while manufacturers that do not already comply can achieve the 15,000 N performance required of tether anchorages in the near future, they will need more time than the lead time provided in the final rule to make any necessary changes and certify compliance of their vehicles with the requirements of the final rule.

At the same time, user-ready tether anchorages installed as soon as possible would serve a child passenger safety need because they will increase the likelihood that parents will attach a top tether on the child restraint system. A tethered child restraint offers improved protection against head impact in a crash. A tether anchorage that complies with the Canadian strength requirement will be better than no tether anchorage at all (which would be the end result of manufacturers removing voluntarily installed tether anchorages after September 1, 1999). Accordingly, we are amending the standard to permit manufacturers the option of installing tether anchorages that meet Canada's strength requirements, for a two-year interim period (until August 31, 2001). During the interim, manufacturers can choose to meet the Canadian requirements. The most significant differences between the Canadian requirements and those in our final rule are Canada's specification of a lower force (10,000 N, instead of 15,000 N) and Canada's method of applying the force (permitting the manufacturer the option of specifying the force application rate, instead of specifying a range of application rates that the agency could use). During the interim, manufacturers can assess their vehicles' ability to comply with the 15,000 N force requirement and make structural changes to their vehicles, as needed. Beginning September 1, 2001, all vehicles will have to meet the 15,000 N strength requirement for all tether anchorages, whether installed voluntarily or pursuant to our standard.[8]

[6] The most significant differences between the Canadian requirements and those in our final rule are:

—the magnitude of the force that is applied to the tether anchorage (10,000 N, instead of 15,000 N);

—the rate that the force is applied to a tether anchorage in a compliance test (Canada permits the manufacturer to specify the force application rate, while under our test procedure NHTSA specifies the rate; the rate of force application can affect the stringency of the test);

—the number of tether anchorages required in multipurpose passenger vehicles that have five or fewer seats (Canada requires two tether anchorages, while we require three, in vehicles that have three or more seating positions rearward of the driver); and

—the requirement to provide a tether anchorage at a center rear seating position (Canada does not have such a requirement, while we do).

[7] It is noted that ISO has not completed finalization of its draft standard. On May 3, 1999, ISO revised the draft again.

[8] Some petitioners suggest that the 15,000 N requirement is unnecessary because Transport Canada adopted a 10,000 N requirement and because, so they believe, a tether meeting Canada's requirements will adequately withstand the forces that are imposed on a tether anchorage in a crash. On the other hand, one petitioner (E-Z-On Products) suggests that Canada's strength requirement should be increased to a higher level, to adequately withstand forces generated by children weighing 120 pounds or more.

To enable us to publish this document regarding the September 1, 1999 effective date of our rule as quickly as possible, we have deferred our response

Continued

The Alliance raises other issues related to their members' designing and manufacturing vehicles to meet the requirements established by Transport Canada for tether anchorages. Transport Canada requires only two tether anchorages in MPVs with five or fewer designated seating positions, while our final rule requires three tether anchorages in these vehicles (the same number of tether anchorages required of passenger cars). (For convenience, since most MPVs with fewer than 6 seating positions are sport utility vehicles (SUVs), we will refer to those MPVs as SUVs.) The Alliance states that Transport Canada's requirement to mandate only two tether anchorages for SUVs was based on comments submitted to it ''which stated that the seating configurations and vehicle design constraints made the mandate of three tether anchors in the rear seat impracticable for such vehicles.'' Some manufacturers state in their owner's manual not to install child restraints in the center position. The petitioner asks that we amend our standard to require only two tether anchorages for MPVs with five or fewer designated seating positions.

In evaluating this suggestion, we note that manufacturers have not submitted information to NHTSA that explains why SUVs, as a vehicle class, should have fewer tether anchorages than passenger cars or why a third tether anchor in the rear seat of these vehicles is impracticable. SUVs are used as passenger-carrying vehicles and are increasing in popularity. Further, we note that the occupancy rate of SUVs for children under 12 in the right front seat is 2.4 times that of passenger cars. We also note that Transport Canada has indicated that it might be revisiting this issue concerning the number of tether anchorages it should require in SUVs. In view of the above information and the absence of information as to why SUVs should have fewer tether anchorages than passenger cars, we have decided to retain the requirement for three tether anchorages in the long run. However, to provide manufacturers with lead time to design and manufacture SUVs with three anchorages, this rule allows manufacturers to provide only two tether anchorages until August 31, 2001. Beginning September 1, 2001, three tether anchorages will have to be provided, if there are at least three rear designated seating positions.

The Alliance also petitioned for reconsideration of our requirement that a tether anchorage must be installed at a designated seating position other than an outboard seating position, if the vehicle has such a (center) seating position. Transport Canada does not have a comparable requirement. The petitioner states that not all MPVs scheduled for introduction by the 2001 model year (i.e., September 1, 2000) have designs that meet the requirement. Petitioner also states that: ''this requirement is not practical for all [MPVs with six or more designated seating positions]. For example, a child restraint installed in the center position will block ingress/egress for the third row outboard seating position in certain vehicles.''

NHTSA is relieving manufacturers from the requirement that one of the tether anchorages must be at a center seating position, until September 1, 2001. As a practical matter, this relief will only affect manufacturers of vehicles with more than three rear designated seating positions, i.e., vehicles other than passenger cars. Vehicles with three rear designated seating positions must be equipped with three tether anchorages. In passenger cars, the rear seat only has at most three rear designated seating positions, so a center rear seat—assuming there is one—will be equipped with a tether anchorage. This amendment gives manufacturers (primarily of vehicles other than passenger cars) until September 1, 2001 to design and manufacture vehicles with a tether anchorage in a center seat. Until that date, manufacturers will have the option of not providing a tether anchorage at a center seating position, assuming they can provide the requisite number of tether anchorages without equipping a center position. On or after that date, a tether anchorage must be provided at a center (i.e., non-outboard) seating position, in vehicles with such a position.[9]

B. Lower anchorages. This final rule also specifies that, from September 1, 1999 until August 31, 2002, manufacturers installing the lower bars of a child restraint anchorage system will have available a compliance option. They may meet either all the requirements for lower anchorages in our March 1999 final rule, or requirements in the draft ISO standard for alternative configuration, location, strength and marking requirements, and the requirements in our March 1999 final rule on all other matters.[10] As discussed in section III.a.1.C of this preamble, a manufacturer's selection of a compliance option will be irrevocable.

These amendments are made to provide manufacturers lead time to develop lower anchorages that meet the strength requirements of our standard. Lower anchorages meeting the draft ISO requirements will provide an improved means of attaching child restraints. While the 11,000 N strength

to those comments to a later date. We are evaluating these comments and will respond to them and to other issues not addressed by today's document in a later document. For the purposes of this notice, we believe that the 15,000 N strength requirement is preferable to the 10,000 N requirement, for the reasons discussed in the March 1999 final rule. Transport Canada has publicly stated that it too is considering increasing its tether strength requirement to 15,000 N, based on data obtained since that country's implementation of its user-ready tether anchorage requirement (see technical proposal, Canada Gazette Part I, March 6, 1999).

While the 15,000 N strength requirement is preferable in the long run, we are balancing the benefits associated with tether anchorages meeting only the Canadian requirements in the short run against the possibility of there being no tether anchorages. Tether anchorages meeting the Canadian requirement will still provide an improvement to parents who might have attached a tether but did not do so because a user-ready anchorage was not present in the vehicle. In the short term, we are adopting an alternative allowing compliance with a lesser requirement as a practicable temporary approach that would reap benefits not otherwise obtainable during the interim.

[9] The final rule required a tether at a non-outboard seating position (a center position) to address the concerns of many commenters that the center rear seating position in cars would not have an improved means of attaching child restraints, even though that is the position many parents in this country prefer to place their child. (This belief is shared by the petitioner. Commenting on a different issue, the Alliance stated on page 17 of its petition for reconsideration that ''Alliance members believe that many customers will want the flexibility to install a child restraint at the center rear seat position. . .'') We believe that many parents will want to place their child in a non-outboard seating position in MPVs as well. These parents will either be frustrated if an improved means of attaching child restraints is not provided at a center position, and/or may use the non-tethered center position anyway, and will not be able to attain for their child the improved safety benefits of a tethered child restraint. As for practical problems with blocking ingress/egress for the third row, we believe the tether can be located to avoid such blockage. For example, the tether anchor could be attached to the ceiling or to the back of the lower part of the seat structure.

[10] The most significant differences between the draft ISO requirements for the lower anchorages of child restraint anchorage systems and those in our final rule are:

a. the magnitude of the force that is applied to the lower anchorages (11,000 N, instead of 8,000 N);

b. the rate that the force is applied to the lower anchorages in a compliance test (the draft ISO standard specifies that the force is fully applied within a time period of two seconds or less, while under our test procedure NHTSA specifies the rate and the time period for full application of the force may be up to 30 seconds);

c. the period of time that the force is held (the draft ISO standard specifies that the 8,000 N force is held for a period of 0.25 seconds, while we specify that it is held for 10 seconds); and

d. the allowance of stowable/foldable anchorages (the draft ISO standard permits these anchorages, while our final rule has a requirement that precludes a stowable/foldable feature, S9.1.1(g)).

e. Other differences between our rule and the draft ISO standard are discussed in the March 1999 final rule at 43 FR 10801–10802.

requirement is preferable to the ISO 8,000 N requirement, we are balancing the benefits associated with lower anchorages meeting the draft ISO requirements in the short run against the possibility of there being no improved means of attaching child restraints. Lower anchorages meeting the draft ISO requirements will still provide an improvement to parents who have difficulty attaching a child restraint correctly in a vehicle or whose vehicle seats are incompatible with child restraints. In the short term, we are adopting an alternative allowing compliance with a lesser requirement as a practicable temporary approach that would reap benefits not otherwise obtainable during the interim. The agency is thus amending the standard to enable manufacturers to provide child restraint anchorage systems in vehicles as quickly as possible.

Many of the petitioners suggested that we permit rigid but stowable/fold-away lower anchorages, as allowed in the draft ISO standard. These petitioners have been developing stowable/fold-away lower anchorages and believed that our final rule was going to permit these anchorages to be installed in vehicles. Apparently these petitioners believed that the final rule would incorporate all aspects of the draft ISO standard, including provisions in the draft standard for stowable anchorages. The draft standard does not expressly allow stowable anchorages, but instead occasionally refers to various requirements that lower anchorages have to meet while in a stored and/or ''deployed'' condition. We are permitting stowable/fold-away anchors during this interim period (until August 31, 2002) within which manufacturer may meet the requirements of the draft ISO standard.

Specifications in the draft ISO standard that we have adopted in this final rule state that the 8,000 N force that is applied in the forward pull test and the 5,000 N force that is applied in the lateral pull test is maintained for a period of 0.25 seconds ± 0.05 seconds. We interpret this hold period to mean that we may hold the maximum force for several seconds or longer; however, the lower anchorages must withstand the required force (i.e., meet the 125 mm displacement limit) only for up to 0.30 seconds.

Several petitions ask us to reconsider the need for the 11,000 N strength requirement for the lower anchorages. The 11,000 N is applied to the lower anchorages by way of a test fixture that attaches to both lower anchorages. NHTSA will respond to these issues in a subsequent document responding to other issues in the petitions. In addition, we will address suggestions concerning the test procedure used to test the lower anchorages that are not addressed by today's document.

C. General issues about the options. This rule specifies that a manufacturer's selection of a compliance option must be made prior to, or at the time of vehicle certification and that selection is irrevocable for that vehicle. The rationale for such a requirement was explained in the March 1999 final rule as well as in other recent agency rulemakings. To summarize, where a safety standard provides manufacturers more than one compliance option, the agency needs to know which option has been selected in order to conduct a compliance test. Moreover, based on previous experience with enforcing standards that include compliance options, the agency is aware that a manufacturer confronted with an apparent noncompliance for the option it has selected (based on a compliance test) may respond by arguing that its vehicles comply with a different option for which the agency has not conducted a compliance test. This response creates obvious difficulties for the agency in managing its available resources for carrying out its enforcement responsibilities, e.g., the possible need to conduct multiple compliance tests for first one compliance option, then another, to determine whether there is a noncompliance. To address this problem, the agency is requiring that where manufacturer options are specified, the manufacturer must select the option by the time it certifies the vehicle and may not thereafter select a different option for the vehicle. This will mean that failure to comply with the selected option will constitute a noncompliance regardless of whether a vehicle complies with another option. (Of course, as we have noted in other rulemaking proceedings, a manufacturer may petition for an exemption from the recall requirements of the statute on the basis that the noncompliance is inconsequential as it relates to motor vehicle safety.)

Executive Order 12866 and the President's memorandum of June 1, 1998, require each agency to write all rules in plain language. Application of the principles of plain language includes consideration of the following questions:

—Have we organized the material to suit the public's needs?
—Are the requirements in the rule clearly stated?
—Does the rule contain technical language or jargon that isn't clear?
—Would a different format (grouping and order of sections, use of headings, paragraphing) make the rule easier to understand?
—Would more (but shorter) sections be better?
—Could we improve clarity by adding tables, lists, or diagrams?
—What else could we do to make the rule easier to understand?

While we generally complied with those requirements in drafting this document, we did not make any significant changes to the Canadian and ISO provisions regarding child restraint anchorage systems in adding them to Standard No. 225. Since those additions are only temporary, we did not attempt to determine whether there are any significant opportunities for simplification or clarification of those provisions. If anyone believes that simplification or clarification of any of those provisions, or of any other part of the regulatory text, is necessary, please write and tell us.

b. Harmonization

The Alliance also petitioned for reconsideration of the final rule based on ''the lack of harmonization with other child restraint anchor activities around the world.'' Petitioner states that the rule creates a unique set of performance requirements that is not applied anywhere else in the world and is not consistent with the Canadian requirements for the tether or draft ISO requirements for the lower bars.

The most significant differences between the Canadian requirements for tether anchorages and those in our final rule are set forth in footnote 6, *supra,* and concern the magnitude of the force that is applied to the tether anchorage and the rate that the force is applied to a tether anchorage in a compliance test. The most significant differences between the draft ISO requirements for the lower anchorages of child restraint anchorage systems and those in our final rule are set forth in footnote 10, *supra,* and relate to the magnitude of the force that is applied to the lower anchorages, the rate that the force is applied in a compliance test, and the period of time that the force is held.

We believe that our final rule fully conforms to the agency's policies and priorities in this area. The agency's policy is to advance vehicle safety by identifying and adopting best safety practices from around the world and by developing new standards reflecting technological advances and current and anticipated safety problems. Thus, while we seek to harmonize our safety standards with those of other countries, we do so only to the extent consistent

with preserving our ability to adopt standards that meet U.S. vehicle safety needs. ''Statement of Policy: NHTSA Priorities and Public Participation in the Implementation of the UN/ECE 1998 Agreement on Global Technical Regulations'' (January 5, 1999, 64 FR 563). In our effort to harmonize with the Canadian requirements for the tether anchorage and the draft ISO requirements for the lower anchorages, we undertook an independent analysis of the basis for the strength requirements for the respective anchorages. We were not aware of any information warranting a 10,000 N force requirement for the tether. The only data we had indicate that the level should be 15,000 N. Further, as we said in the preamble to the final rule, we did not know why the drafters of the draft ISO standard chose the 8,000 N requirement. We also explained in the final rule document our reasons for differing from the specifications in the draft ISO standard for applying the force to the lower anchorages in the compliance test. That we set the performance requirements based on an independent analyses is fully consistent with NHTSA's policies and priorities on international harmonization.

We also note that with regard to the strength requirements for the lower bars, the draft ISO standard has not yet been adopted in final form by any country. The draft ISO standard is still undergoing revision by the working group charged with developing the standard. Because no country has adopted strength or any other requirements for the lower bars, our 11,000 N requirement, the first of its kind, is not discordant with any other standard. We should also note that our requirements are generally not mutually exclusive from those of Canada for tether anchorages and those of the draft ISO standard for the lower bars. Anchorages that are produced to meet the requirements of our March 1999 final rule will meet all the requirements of the Canadian and draft ISO standards.

3. Notice and Opportunity To Comment

The Alliance petitioned the agency to reconsider the strength test procedures and requirements for tether anchorages and the lower anchorages of a child restraint anchorage system. The Alliance argues that the agency included these provisions in the final rule without first giving the public an opportunity to comment on the provisions and thus violated the informal rulemaking provisions of the Administrative Procedure Act. The Alliance states that:

> [T]he test procedures and strength requirements for the top tether anchors and the test procedures for lower anchors were neither proposed in the NPRM nor logically grow from it. The NPRM published on February 20, 1997 discussed the strength requirement and test procedure for top tethers in Part 571.210b, Section S4.4. It states ''. . . the tether anchorage with the tether anchorage hardware installed shall, when tested in accordance with S5, withstand a force of 5,300 N. There shall be no complete separation or failure of any anchorage component.'' The final rule, in Section 6.3 imposes a 125 mm deflection requirement that was not proposed or discussed in the NPRM. In addition, the final rule, in Section 8 imposes a test procedure that applies a 15,000 N force to a test fixture which was not proposed or discussed in the NPRM.
>
> The NPRM discusses the test procedure for lower anchorages in Part 571.210a, Section S5. It states ''Test each lower anchorage separately, with or without connectors provided with the vehicle. Apply a force of 5,300 N to each anchorage in the forward horizontal direction . . .'' The final rule, in Section 11, imposes a test procedure which applies an 11,000 N force to a test fixture. This test procedure is not proposed or discussed in the NPRM.

The agency disagrees with the Alliance. The test method adopted in the final rule is similar to one of two alternative test methods discussed in the NPRM in connection with assessing the real-world performance of child restraint anchorage systems. The first approach was to apply test forces to all anchorages, simultaneously, by means of a child restraint. This method would also have tested child restraints for compliance with Standard No. 213 by attaching the child restraint to an actual vehicle anchorage system. Testing actual vehicle anchorage systems with actual child restraints would have increased the real-world representativeness of the test method. However, in the section of the NPRM entitled ''Proposal for New Vehicle Standard, Highlights of Proposal,'' we acknowledged that there were difficulties with this approach:

> If vehicles were tested with actual child seats, and vice versa, and if a vehicle anchorage system, for example, were found to fail the proposed requirements, an issue could arise as to whether the failure was with the vehicle system, or with the child seat attached to the vehicle system. To avoid this complication, the compliance tests must be as controlled as possible to remove unknown influences on the performance of regulated parts.

62 FR 7870.

Because NHTSA was concerned that testing a vehicle anchorage system with an actual child restraint could possibly introduce factors that could complicate enforcement efforts, the agency tentatively rejected that alternative. We favored an alternative approach, which was to test each anchor of a child restraint anchorage system individually by attaching a belt strap to the anchor and pulling it at a specified force. We discussed in the NPRM our tentative conclusion that this alternative would replicate real-world performance, but acknowledged that this approach also had limitations:

> A potential but seemingly necessary limitation in the proposed compliance tests is that the vehicle system is statically tested by devices that replicate the loads imposed by a child seat, and a child restraint is dynamically tested on a seat assembly simulating a vehicle seat. That is, an actual vehicle anchorage system would not be tested with an actual child restraint, and vice versa. This is to avoid possibly complicating enforcement efforts if an apparent failure arises in a compliance test. . . .
>
> While the actual vehicle-to-child seat attachment would not be tested, NHTSA believes that the performance obtained in the compliance test will reflect the real-world performance of the anchorage system and the child restraint. This is because the geometry of the belts and latchplates primarily responsible for the vehicle-to-child seat interface would be precisely specified by this proposal. These components would have to be provided on vehicles and child seats precisely as specified in the standards. In turn, these components, in the same geometry as that specified in the standards, would be used in the compliance tests. Thus, the vehicle-to-child seat interface should be adequately tested.

Id.

Since use of the straps would avoid the problems associated with use of child restraint systems, although at the cost of some loss of real-world representativeness, we proposed a strength requirement and a static pull test for the tether anchorage that were the same as the then-Canadian proposal for user-ready tether anchorages. The agency proposed that the anchorage would have to withstand a force of not less than 5,300 N, applied to the tether anchorage by a belt strap (see I.a. of this preamble, supra, for discussion of the provisions for the strength requirements in the NPRM and final rule). In the section of the NPRM entitled ''Proposal for New Vehicle Standard, Performance,'' the agency requested comments ''on whether more specificity is needed for these strength requirements and on whether other performance requirements should be included in the standard.'' 62 FR 7873.

In the final rule, we decided to apply the test forces to child restraint anchorage systems by means of surrogates for child restraint systems. We adopted use of the surrogates because they better simulate the real-

world interaction between a child restraint and the vehicle anchorages than testing the anchorages individually by means of a belt strap.

The adopted approach is very similar to the one we tentatively rejected in the NPRM, i.e., the one that used actual child restraint systems to apply the test forces. We had tentatively rejected that approach out of concern that using child restraints in the compliance test would introduce too many additional variables into the compliance testing process. The decision to substitute child restraint surrogates for actual child restraint systems adequately addressed the problem of uncontrollable factors. The surrogates, called ''static force application devices (SFADs)'' in the final rule, distribute the forces generated in a crash as a child restraint does in dynamic crash testing. However, because they are controlled test devices, their use in compliance testing does not introduce the same potential concerns noted above that using an actual child restraint could pose. In the final rule, thus, we balanced the concerns underlying the interest expressed in the NPRM in using actual child restraints to more assuredly obtain test results related to real world performance with the concerns also expressed in the NPRM in having the test be as controlled as possible to remove unknown influences on the test results.[11]

The use of child restraint surrogates to test child restraint anchorage systems in vehicles was strongly supported by the commenters. Many vehicle manufacturers suggested that applying the load, by way of a child restraint surrogate, to all three anchorages simultaneously better evaluates how the tether anchorage would perform in the real world than by testing the anchorages individually. GM suggested that using a test fixture representative of a child restraint to apply a test force is a more relevant measure of child restraint excursion than the proposal. The fixture it suggested was the SFAD 1 fixture (which GM calls ''the Structural Fixture'') ultimately adopted by our final rule. ''By using the Structural Fixture, the displacement of the CRS [child restraint system] due to structural deformation of the anchorages is more accurately demonstrated.'' (GM comment, page 8, and Attachment E thereto, page 1, May 21, 1997, Item No. 96–095–N03–027 in Docket No. 96–095–N03.) GM and Ford suggested that loading all three anchorages at one time (the two lower anchorages and the top tether anchorage) is the most appropriate method to evaluate in a static load test how a child restraint will perform dynamically in limiting forward excursion.

The fixtures we selected were jointly developed by the vehicle manufacturers and Transport Canada for use in testing child restraint anchorages in Canadian vehicles. Similar to this agency, Transport Canada will use the SFAD 1 fixture to test tether anchorages at a seating position that does not have the lower bars of a child restraint anchorage system. (The fixture is attached at its bottom, at the vehicle seat bight, by the vehicle's seat belt.) The other fixture, ''SFAD 2,'' will be used to test tether anchorages at a seating position that has the lower bars of a child restraint anchorage system. SFAD 2 is from the draft ISO standard ISO/DIS 13216–1. Both of these fixtures were discussed for use in Canada's tether anchorage regulation at a September 11, 1998 meeting between Canadian and US representatives of vehicle and child restraint manufacturers and Canadian officials. The meeting was organized by the Canadian Vehicle Manufacturers' Association (CVMA). We placed a memorandum describing what we were informed about the meeting into the docket; see 96–95–N3–00071, dated October 31, 1997, as corrected in 96–95–N3–00071A, dated July 20, 1999.

The magnitude of the load that is to be applied to each test fixture (15,000 N) is essentially equivalent to the magnitude of the load that was proposed in the NPRM. Applying a horizontal 15,000 N force to the SFAD 1 fixture, which in turn applies the load to three anchor points on the vehicle (one of which is the tether anchor), results in a horizontal force of about 5,400 N applied to the tether anchorage, assuming no interference of the fixture with other vehicle components. This was explained in the final rule, 64 FR 10808. (''This final rule has increased this [the proposed strength requirement of 5,300 N applied horizontally to an individual anchor] to 15,000 N to reflect the use of the fixture in testing tether anchorages.'') Applying a horizontal 15,000 N force to SFAD 2, which in turn applies the load to three anchor points on the vehicle, results in a horizontal force of about 7,000 N applied to the tether anchorage, which is only about 30 percent higher than the horizontal 5,300 N proposed in the NPRM. In addition, as noted in the preamble to the final rule, we also chose the force level because test data indicated that it is needed to help ensure that tether anchorages will be able to bear the loads generated by children in forward-facing child restraints (64 FR 10808).

In the final rule, we adopted a performance measure based on the amount of deflection, i.e., it specified that tether anchorages must not deflect such that a point on a test fixture moves more than 125 mm during the application of test forces. We adopted the deflection limit because it is a more objective measure of performance than the requirement originally proposed in the NPRM, i.e., that an anchorage ''withstand'' the required force. The NPRM expressly requested comments as to whether the ''withstand'' requirement and the other strength requirements should be more specific, i.e., more objective. 62 FR 7873. GM suggested in its comment to the NPRM that measuring movement of the child restraint test fixture is a more relevant measure of child restraint excursion. GM suggested in its comment that a final rule require that a ''point I'' on the fixture must not displace more than 125 mm longitudinally from its initial position. Finally, the 125 mm deflection requirement was proposed in the NPRM as the proposed performance requirement for the two lower anchorages of the child restraint anchorage system. Because those lower anchorages and the tether anchorage together constitute a ''child restraint anchorage system,'' it was a logical outgrowth of the NPRM that all three are subject to the same deflection limit as a measure of acceptable performance. By giving the public notice of the subjects and issues being considered, and adopting changes that are a logical outgrowth of the NPRM, the agency fully satisfied the requirements of the Administrative Procedure Act.

With regard to the lower anchorages, we proposed that they could consist of either a flexible latchplate system or a rigid bar anchorage system (the system permitted by the draft ISO standard). Since the testing of those systems presented essentially the same problems as testing tether anchorages, we resolved those problems in the same way. We tentatively rejected the use of child restraint systems to apply test forces simultaneously to the lower anchorages and proposed instead to apply test forces separately by means of a strap. Further, our statements in the NPRM provided notice that we were determining the appropriate level of

[11] Standard No. 210 also uses test devices to apply test loads to seat belt assembly anchorages. The devices are a pelvic body block that represents a human pelvis and a torso block that represents a human upper torso. Prior to our March 1999 final rule, seat belts and seat belt anchorages were the standardized anchorage system used to anchor child restraints in vehicles. The approach taken by our March 1999 final rule, to use a test device to apply the loads, is logically related to the method now used to test the current anchorage system for child restraints.

performance to mandate for the lower anchorages, and that the requirements and procedures of the draft ISO standard were being considered.

In response, a number of commenters urged us to adopt use of the test fixture, representing a child restraint system, specified in the draft ISO standard for the purpose of applying an 8,000 N force to the lower anchorages. Comments were also provided on the levels of force that should be applied to the anchorages, and the length of time those should be held.

The procedures and requirements we adopted for the lower anchorages are a logical outgrowth of the proposal. The test procedures we adopted for testing the rigid bars are directly based on those in the draft ISO standard. These procedures include use of a test fixture that applies test loads to the two lower anchorages simultaneously, rather than individually. For the reasons discussed above with respect to tether anchorages, use of a test fixture is preferable both to testing the lower anchorages separately using a strap and to testing them simultaneously using actual child restraint systems. Finally, the magnitude of the load that the final rule applies to the lower anchorages simultaneously by way of the fixture (11,000 N) is almost the same as the sum of the horizontal loads (10,600 N) that we proposed in the NPRM for testing the strength of the lower anchorages (5,300 N applied horizontally to each lower anchorage). We note that that force level is also supported by test data (see discussion in preamble to final rule, 64 FR 10805).

The Alliance also states that we did not provide notice and an opportunity to comment on the requirement in the final rule to provide three tether anchorages. The petitioner states:

> The agency proposal would have had the effect of requiring only two tether anchors, at seating positions with lower anchors. Thus the agency has provided no notice of a requirement for a third anchor at the center seat position, and no lead time.

We disagree with the Alliance that about the adequacy of notice. The NPRM requested comments on the number of anchorage systems we should require. The agency stated in the NPRM:

> There was no consensus among the [14 rulemaking] petitioners as to the number of child restraint anchorage systems that should be required and where in the rear they should be. Many believe that the system should be installed at each of the outermost designated seating positions of the second row (and a tether anchorage in the rear lap-belt center position). The Japanese vehicle manufacturers believe that only one rear seat position should be required to have the system. Fisher-Price, a child restraint manufacturer, believes that the rear center seating position is recognized as the safest and that the system should therefore be required there. * * * NHTSA has tentatively determined that each vehicle with a rear seat should have at least two rear seating positions that can properly hold a child restraint system. The agency is concerned whether there is a need for an anchorage system at more than two seating positions. NHTSA requests information on this issue, such as demographic data on the number of children in child restraints typically transported in a family vehicle. * * * This proposal does not specify that both anchorage systems would have to be provided at an outboard position. In some vehicles with large interiors, it may be possible to install one of the required systems in a center seating position.* * *

62 FR 7871.

These statements in the preamble to the NPRM provided clear notice that we were exploring alternatives to the proposed number of required child restraint anchorage systems. The notice specifically raised the issues of requiring a tether anchorage in a center rear seating position, of providing a tether anchorage at the location (center rear seat) preferred by many parents for placing a child, and of how many improved attachment systems are needed. Many commenters addressed the issue of how many seating positions should have a child restraint anchorage system, with most suggesting that an additional (i.e., third) tether anchor should be required (if not a full child restraint anchorage system). From these comments, we learned that many parents will want an improved means of attaching child restraints in the center rear seating position. We did not require that one of the two full child restraint anchorage systems be installed in the rear center position because it may be difficult to fit the lower anchorages of two child restraint anchorage systems adjacent to each other in the rear seat of small vehicles. However, we decided that a tether anchorage at the center rear position will improve the attachment of child restraints at that desired position and will provide parents with flexibility in deciding where they restrain their children. Based on the foregoing, we conclude that requiring a third tether anchorage and one at a center seating position was a logical outgrowth of the NPRM and that the agency fully satisfied the requirements of the APA.

4. Other issues

A. Procedures for testing tether anchorages. This section responds to suggestions in some of the petitions for reconsideration for amending the final rule's test conditions and procedures for testing tether anchorages. Some petitioners believe that some of the test conditions and procedures could be clearer and made more objective.

We have decided to adopt some of the suggestions and not adopt others. The test conditions and procedures discussed in this section of the document are those set forth in S7 and S8 of the final rule to test tether anchorages that are certified as meeting the requirements of the March 1999 final rule. As discussed today in Section III, above, until September 1, 2001, manufacturers have the option of certifying their tether anchorages to the requirements set by Transport Canada. Such tethers will be tested according to the conditions and procedures in the Canadian standard.

The Alliance suggests several changes to S8.1 of the final rule, which specifies how the 15,000 N force will be applied to the tether anchorage. Petitioner suggests that the initial angle of pull specified in S8.1.(c)(2) should be 10 ±5 degrees, rather than ''not more than 5 degrees.'' Petitioner explains that the angle of pull in the final rule can cause the force application cable to rub on the SFAD test device, thus potentially affecting the force on the tether strap. NHTSA has made the suggested change. Interference of the SFAD on the cable could affect the loads that are actually applied to the tether anchorage, which is undesirable. Increasing the angle of pull to 10 ±5 degrees, from not more than 5 degrees, will eliminate the potential for interference and will not significantly affect the magnitude of the load applied to the device (the horizontal component of the applied load may be reduced by about 3 percent).

The Alliance suggests other changes to the manner in which the test force is applied to the tether anchorage. Petitioner suggests that S8.1(c)(3) be amended to clarify that the requisite force is held for one second, and not longer. We have made this change. Petitioner also suggests that S8.1(c)(3) should permit manufacturers to select the time period for application of the test force, as long as it is within the 30-second time limit. Such an amendment would permit the manufacturer to load the tether anchorage with the maximum 15,000 N load in a short period of time (relative to the 30-second time limit), e.g., 3 to 5 seconds. The petitioner states that Canada allows the vehicle manufacturer to select the time period for application of the test force, as long as the period is within the 30-second time limit, and will use the manufacturer's selected force application time period in compliance

testing. (We have confirmed with Transport Canada that this is correct.)

The Alliance also questioned the absence of a specified rate of increase of force during the test:

> Because S8.1(c)(3) does not specify a linear increase in force (or any other force/time profile), . . . [does] the agency mean to specify a linear increase in force? Or does the agency intend to include an infinite number of force application variations, including increasing the force to just below the full load in less than 1 second, and then holding at that level for the remainder of the 30-second force application time? The results of such a force application would vary significantly from a linear increase in force.

We agree with the Alliance that, as written, this provision would allow the agency to test compliance at a variety of force onset rates and force/time profiles. While we believe that we could legitimately provide for such variation, we are amending S8.1(c)(3) to provide for a more specific rate of force application. Today's document specifies that we will increase the pull force as linearly as practicable, from the pre-load pull force of 500 N to the full force application of 15,000 N in 27 ± 3 seconds, (i.e., not less than 24 seconds and not more than 30 seconds).[12] This means that the compliance test laboratory will be instructed to attempt to increase the force at a constant rate, but that variations due to the limitations of the test equipment or the characteristics of the vehicle will not invalidate the test. Equivalent changes will be made to S11 concerning the rate of force application for testing the lower bars of child restraint anchorage systems.

We are denying petitioner's request that manufacturers be permitted to specify the force application rate because we believe that the force should be applied at a constant rate for as long a time period as possible. This is to assure that the test adequately measures the strength of the anchorage. Metal structures generally can withstand greater forces under a faster rate of application than under a slower one. This means that an anchorage that fails when the required force is reached after 30 seconds might not fail if the required force is reached in a very short period of time. Adopting the petitioner's request could allow the use of weaker anchorages, resulting in a possible reduction in safety. However, we will permit manufacturers who have chosen the option of complying with the Transport Canada requirements to specify the rate of load application during the interim period. Manufacturers have been designing tether anchorages to meet the Canadian requirement and will need time to reassess and possibly reinforce the anchorage to meet the load requirement of our March 1999 final rule when the load is applied over a 27 ±3 second period. We will provide them the needed leadtime, i.e., until September 1, 2001. On or after September 1, 2001, we will achieve the 15,000 N load by increasing the load at an approximately constant rate over a 27 ±3 second period.

The Alliance also refers to a December 30, 1970 NHTSA interpretation letter to Mr. Shuman of International Harvester Company on the force application rate in Standard No. 210 to support petitioner's view that the force application rate in Standard No. 225 is unrealistically long. Petitioner believes that the letter indicates that we believed there is no significant difference between applying the Standard No. 210 force in 0.1 seconds and holding it for 10 seconds and holding the force for 39.9 seconds. Petitioner asks: ''Does the agency now maintain that there is no significant difference between applying peak forces for 1 second and applying peak forces for 30.9 seconds? If so, why does the agency specify unrealistically long force application and hold times?'

The International Harvester letter concerns Standard No. 210's specification that the force applied to seat belt anchorages is applied within 30 seconds, and held at the maximum force level for 10 seconds. The letter enunciates the position that if an anchorage is strong enough to withstand the maximum force level of Standard No. 210 for 10 seconds when the required force is attained in 0.1 seconds, the anchorage will likely be able to withstand the force held at 10 seconds when the force is applied in a constant rate over about 30 seconds. Even if this is correct in the context of Standard No. 210, the same can not be assumed for child restraint tether anchorages. The force applied to these anchorages is held for only 1 second, rather than 10 seconds. Because metal structures can generally withstand greater forces under a faster rate of application than under a slower one, there is a margin of safety incorporated into the load application rate of Standard No. 225 to increase the likelihood that the anchorage will not fail even under the most severe crash conditions.

The Alliance states that S8 specifies that the tether strap attached to the test fixture is permitted too much variation in elongation to objectively test the tether anchorage. The petitioner suggests that a narrow range of elongation be specified, such as between 7 and 9 percent at a force of 11,000 N. We have addressed this concern by amending S8 to provide that a steel cable will be used to attach the SFAD to the tether anchorage. The elongation of a steel cable under load is both minimal and predictable.

The Alliance suggests that a tether hook be used to attach the strap to the tether anchorage, rather than a ''bracket.'' Petitioner states that without an objective bracket specification, manufacturers cannot determine how the device will apply loads along the anchor (e.g., along the entire anchor or concentrated at the center). However, the Alliance states, attempts by vehicle manufacturers to apply test forces specified in the final rule frequently break typical tether hooks. NHTSA has amended S8 to specify use of a tether hook. The hook that we will use will have the same overall dimensions as tether hooks on child restraints, but will be made of high strength steel. Tether hooks are required by S5.9(b) of Standard No. 213 to meet specified configuration and geometry requirements.

With regard to the comment that tether hooks have broken under the test loads specified in the final rule, we note that Transport Canada has conducted tests that have not resulted in such breakage. In recent tensile strength tests performed by Transport Canada, tether hooks were able to sustain much higher loads than the loads expected in the test specified by the final rule. Three hooks from each of four manufacturers were tested to failure by applying a static tensile force at an onset force rate of 135,000 N/s with a target load of 6,500 N and held for a duration of 10 seconds. The average maximum loads observed ranged from 8,870 N to 11,800 N. These loads are substantially higher than the ones specified in the final rule. (These data were presented by Transport Canada at a meeting with manufacturers, importers and interested parties in Ottawa, Ontario, on March 30, 1999. A copy of these data has been placed in the docket for our March 5, 1999 final rule, 98–3390, notice 2.)

The Alliance petitioned for reconsideration of the 125 mm displacement limit specified in S6.3.1(a) and in S6.3.2 for the tether anchorage. As discussed in Section I of this document, the Alliance has stated that 125 mm displacement limit was adopted without providing the public notice of it and an opportunity to

[12] Standard No. 210 does not provide any specific rate of force increase, linear or otherwise. However, as set forth in our Laboratory Test Procedure for Standard No. 210, we have conducted our compliance tests using a linear increase in force over a 25-second period.

comment. We responded to this comment in Section III, *supra*. Further, we believe that the displacement limit is preferable to the alternative that the tether anchorage ''withstand'' the required forces because a displacement limit is far more objective than the latter in determining whether an anchorage met the performance criteria. The petitioner also states that the requirement is unclear:

> It is not clear whether the agency will measure displacement only in the direction of the tether strap, or if the total resultant displacement calculated by combining displacement in all three dimensions is intended. It is also not clear if the reference point for the displacement is to be taken before or after the application of the 500 N pre-load force. It is also unclear whether the maximum displacement is measured under load or after the load is released.

NHTSA has amended S6.3.1 to specify that we will determine the displacement for the tether anchor by measuring the horizontal excursion of point X on the test device. The reference datum for this measurement is where point X is located after preloading the SFAD with a preload force of 500 N. From that datum, the displacement is the total horizontal excursion that point X experiences during the loading. This is consistent with the displacement criterion for the lower anchorages. Standard No. 225 specifies that point X on SFAD 2 must not be displaced more than 125 mm from where point X was after preloading.

The Alliance petitions to amend S6.2 to provide that the location of a tether anchorage is found using the design H-point for a seat position, rather than the actual H-point of the seat. The latter point is determined using a three-dimensional H-point machine (3-Dimensional seating manikin). The petitioner believes that ''[b]ecause of variability in position of the 3-Dimensional Seating Manikin when installed by different individuals and laboratories, the actual H-Point as determined with the Manikin will also vary in location with respect to the 'design H-Point' for that seat position. These variations also occur, in part, because of the poor fit of the Manikin in certain seating positions, and differences in trim materials (e.g., cloth vs. leather). Because of this inherent variability, the NHTSA procedure does not objectively measure the proper position for a tether anchorage.''

We disagree with the petitioner's concerns about the 3-dimensional seating manikin and its use in the standard's test procedure to locate the H-point of a vehicle seating position. We have not encountered variability problems in our tests using the manikin. The manikin is presently used in Federal Motor Vehicle Safety Standard No. 208, ''Occupant Crash Protection'' (49 CFR 571.208), to determine the H-point of a seating position for positioning Hybrid III test dummies (49 CFR part 572, subpart E) in Standard No. 208 crash tests. It is also used in Federal Motor Vehicle Safety Standard No. 214, ''Side Impact Protection'' (49 CFR 571.214), to determine the H-point for positioning side impact test dummies (49 CFR part 572, subpart M). Manufacturer's representatives are usually present during our compliance tests for these standards and are asked to check the dummy's positioning prior to a test. The 3-dimensional seating manikin produces dummy positioning equivalent to that obtained by manufacturers using the device in their own test laboratories. Further, the manikin produces repeatable results when used repeatedly in the same vehicle. We also believe that using the 3-dimensional machine results in an H-point measurement that is more representative of the real world than the H-point obtained through use of the alternative suggested by the Alliance. This is because the 3-dimensional machine compresses the actual seat and provides a more realistic H-point than that achieved on paper using the 2-dimensional template. Further, it should also be noted that the position of the H-point obtained using the 3-dimensional seating manikin is very close to the H-point obtained using the 2-dimensional template. To the extent needed, manufacturers can compensate for and design around the small differences. Because we believe that the 3-dimensional seating manikin yields data that are highly repeatable and reproducible and more realistic than those obtained by the 2-dimensional template, the request to specify the template is denied. (We are, however, specifying that the template may be used during the two-year interim period as part of the option allowing manufacturers to meet Canadian requirements for the tether anchorages. Canada uses the template to determine the location of tether anchorages.)

The Alliance suggests that the tether anchorage test procedure of S8.1(b) be amended by adding an instruction for adjusting the fore-aft position of the rear attaching bars of the test device used to test a tether anchor at a seating position with a child restraint anchorage system (the test device referred to as SFAD 2). We have added the suggested instruction to S8.1(b). Petitioner also suggests that the shape of the SFAD 2 attachments that contact the lower anchor bars be specified because the shape could affect the outcome of the test. We have modified Figure 17 of the standard to show in Detail B that the rear of the slot in the SFAD 2 connecting arms has a diameter of 6.5 mm. The petitioner also suggests that a stiffness specification for SFAD 2 be added as in the draft ISO standard, to ensure that the test fixture is sufficiently strong to withstand the forces in the test. We have added a stiffness specification, from the draft ISO standard, to Figure 17.

Volkswagen (VW) petitioned to change the test device used to test a tether anchor at a seating position that does not have the lower anchorages of a child restraint anchorage system (the test device referred to as SFAD 1). The vehicle's belts are used to attach SFAD 1 to the vehicle seat at the seat bight. A cable is used to attach the top of SFAD 1 to the tether anchorage. VW states that ''[s]ome testing has indicated that the design of the fixture interferes with belt system routing requirements or geometry such that the stiff portion of the buckle sits at the opening of the fixture rather than being inside or outside the opening.'' The petitioner suggests that the SFAD 1 openings for the belt routing be consistent with the fixture in the Society of Automotive Engineers (SAE) Recommended Practice J1819, ''Securing Child Restraint Systems in Motor Vehicle Rear Seats.'' J1819 specifies a common reference tool, a ''Child Restraint System Accommodation Fixture,'' that approximates a child restraint system. Both vehicle and child restraint manufacturers can use the fixture to assess the degree to which their products are compatible.

NHTSA has addressed VW's comment by amending S8.1(b) of the final rule to specify that if SFAD 1 cannot be attached to the vehicle seat using the belts because of the location of the vehicle belt buckle, the vehicle belt will not be used. Instead, SFAD 1 will be attached by material whose breaking strength is equal to or greater than the breaking strength of the webbing for the seat belt assembly installed as original equipment at that seating position. We also specify that the geometry of the attachment must duplicate the geometry, at the pre-load point, of the attachment of the originally installed seat belt assembly. These provisions are essentially the same as those specified in Standard No. 210, ''Seat Belt Assembly Anchorages.'' We believe these provisions address VW's concern, while providing more flexibility to address the problem VW describes than

the approach suggested by VW. Our adopted approach will not affect the outcome of the assessment of the tether anchor's strength.

Toyota suggests amending the provision that states that, for the purpose of testing a tether anchorage at a seating position that has a child restraint anchorage system, place the seat back in its most upright position:

> When the seat back is placed in its most upright position, in some vehicle seats the SFAD 2 cannot attach to the lower anchorages. In the real world, if a CRS [child restraint system] cannot attach to the anchorages, we believe the vehicle owner will adjust the seat back such that the CRS can be attached. Therefore, Toyota requests that the agency amend S7(a) * * * to allow for adjustment of the seat back for cases where the SFAD 2 cannot be attached to the lower anchorages with the seat back in its most upright position.

To address Toyota's concern, we have added a statement to S7(a), which states:

> When SFAD 2 is used in testing and cannot be attached to the lower anchorages with the seat back in this position, adjust the seat back as recommended by the manufacturer in its instructions for attaching child restraints. If no instructions are provided, adjust the seat back to the position that enables SFAD 2 to attach to the lower anchorages that is the closest to the most upright position.

B. Issues relating to the application of the standard. Several petitioners ask us to reconsider the application of the standard to certain vehicle types or seating positions, or ask for clarification of the applicability of particular requirements. The Alliance asks that the rule be amended to specify that the requirements of the standard only apply to forward-facing rear designated seating positions, and not to rearward-or side-facing rear seats. The petitioner states that neither of the latter types of seats are recommended for child restraint installation, so the requirement for the installation of child restraint anchorage systems or tether anchorages should not apply to them. The agency agrees and has amended the provisions of S4 of the final rule to make clear that rear-and side-facing seats are not counted in determining the number of required anchorages.

The Alliance asks us to confirm that a convertible that has no rear designated seating position or which has an on-off switch for the passenger air bag will only have to have lower anchorages in the front passenger seating position, and not a tether anchorage. This is partially correct. Vehicles that have no rear designated seating position, and no on-off switch, are generally required to have a tether anchorage at the front passenger seat (see, e.g., S4.4(c)). Convertibles, however, are excluded on practicability grounds from the requirement to have a tether anchorage (S5(a)). Thus, a convertible with no rear designated seating position, and no on-off switch, is not required to have a tether or a child restraint anchorage system in the front passenger seat. Vehicles that have no rear designated seating position but which have an on-off switch are generally required to have a child restraint anchorage system in the front passenger seating position (S5(c)(1)). Again, however, because convertibles are excluded from the requirement to have a tether anchorage (S5(a)), a convertible with no rear designated seating position and an on-off switch is required to have the lower anchorages of a child restraint anchorage system in the front passenger seating position, but is not required to have a tether anchorage at that position. We have added language to S5(c) to clarify these requirements.

Global Vehicle Services, Corporation asks us to clarify the provisions of the standard as they apply to vehicles that have received temporary exemptions under 49 CFR Part 555 from the requirement in Standard No. 208 that an air bag be provided for the front passenger seating position. This and other requests for reconsideration of S5(d)'s prohibition against placing a child restraint anchorage system in an air bag-equipped front passenger seating position will be addressed in the next document we will be publishing in response to the petitions for reconsideration.

The Coalition of Small Volume Automobile Manufacturers, Inc. (Cosvam), asks us to reconsider the requirement that vehicles without any rear designated seating position (and without an air bag on-off switch) must be equipped with a tether anchorage at each front passenger seating position (see, e.g., S4.4(c)). Cosvam asks that we permit manufacturers to label the vehicle as ''unsuitable for child seats'' and exclude so labeled vehicles from requirements to have a tether anchorage. Cosvam said it believes that, because manufacturers know their vehicles better than anyone else, and are ultimately held responsible for issues involving vehicle design and performance, they should be permitted to decide whether the use of a child restraint is appropriate in their vehicles.

NHTSA is denying this request. We are concerned that child restraints could be used in vehicles that do not have rear seating positions, but have air bags at front passenger seating positions. Our rule prohibits the installation of a full child restraint anchorage system at the front seating position if the vehicle does not have an on-off switch. The purpose of this prohibition is to reduce the likelihood that a child restraint system would be used in the front seat. However, because there could be parents who would use the vehicle, notwithstanding the lack of a child restraint anchorage system, to transport their children, we decided to require the installation of a tether anchorage. The provision to which Cosvam objects is primarily for the benefit of toddlers in forward-facing child restraints. In the event the vehicle were used to carry these toddlers, a tether anchorage would help keep the child restraint and the restrained child as far as possible from a deploying air bag. (NHTSA has received a number of telephone calls from owners of vehicles with no rear seat asking for help in installing child restraints in front seats.) A tether anchorage would be very helpful in reducing head excursion toward the dashboard in the event of a crash. Further, although we encourage vehicle manufacturers to fully inform potential buyers of possible incompatibility problems between their vehicles and child restraints, we are concerned that Cosvam's suggestion that the vehicles in question should be permitted to be labeled as not suitable for child restraints may not dissuade some parents from using the vehicle to carry children. Parents do in fact use sports cars to transport children in child restraint systems. NHTSA has received a number of phone calls from owners of sports cars wanting to know which child restraint system fits best in their vehicles. We believe that a tether anchorage should be provided in these vehicles to improve the securement of the child in the event the toddler is transported in the vehicle. Accordingly, this request is denied.

Several petitioners ask us to reconsider the requirement in S9.3, *Adequate fit of the lower anchorages,* that each vehicle and each child restraint anchorage system in that vehicle must be designed such that the child restraint fixture (CRF) specified in the standard can be placed inside the vehicle and attached to the lower anchorages of each child restraint anchorage system. Cosvam argues that this requirement amounts to a ''prohibited design standard,'' and would require the manufacturers of sports cars and similar vehicles to redesign or eliminate rear seats of those vehicles. Cosvam asks us to add a provision to the rule stating that vehicles having rear seats that cannot accommodate the CRF, but lacking an

on-off switch for the air bag, need have neither a tether nor child restraint anchorage system in the rear seat of the vehicle, nor a tether anchorage in the front seating position. In other words, they are excluded from the standard. The petitioner states: ''Manufacturers should be permitted to exclude 'small rear seat vehicles' because they are, from a child restraint point of view, the same as vehicles without rear seats.''

American Honda states in its petition that it can be very difficult or impossible to get the CRF into the rear seating area of some vehicles, such as small two-door cars. The commenter states that the draft ISO standard (which developed the CRF and the procedures for its use) specifies that ''To facilitate installation of the CRF in a vehicle seat, the CRF may be constructed of smaller parts and assembled in the vehicle seat. Alternatively, vehicle components maybe removed to allow access.'' Honda requests that similar language be added to Standard No. 225. Honda also states ''From a practical standpoint, we believe that child restraints will be offered in various sizes, including child restraints that are somewhat smaller than the CRF for use in small vehicles. * * * Thus, if the CRF, in its full shape and size, can be fitted to the lower anchorages, we believe it is not important whether the CRF had to be assembled in place or some vehicle components (e.g., front seat) had to be removed to facilitate getting the CRF into the seat position where the lower anchorage fit was being checked.''

Toyota, in its petition for reconsideration, states that some of the rear seating positions in some carlines can not accommodate the CRF, but are able to accommodate existing child restraints and will be able to accommodate new child restraints that will use the child restraint anchorage system. Toyota suggests that we exclude vehicles that cannot accommodate the CRF, due to a lack of rear seating space, from the fit requirements of S9.3, as long as the lower anchorages that are required to be installed are designed to accommodate the lower anchorages of the CRF.

We are amending S9.3 along the line suggested by Honda and not adopting the suggestions of Cosvam and Toyota. We agree that S9.3 as currently written could result in unnecessary design changes for some vehicles. The CRF is larger than many child restraint systems. Even if the CRF does not fit in a vehicle's rear seat, there will likely be child restraint models that will be small enough to fit. Accordingly, we are amending S9.3 to specify that, to facilitate installation of the CRF in a vehicle seat, the side and top frames of the CRF may be removed in order to place it in the vehicle. To illustrate the CRF with the side and top frames removed, we are adding a Figure 1A to the standard. We believe that this approach responds to Cosvam's and Toyota's concerns about the ability of their vehicles to fit the CRF in the rear seating system and makes it unnecessary to exclude vehicles as these petitioners have requested. We do not believe sufficient information has been provided to justify excluding vehicles with one or two designated rear seating positions from the requirement to provide a child restraint anchorage system at those positions. Some parents may use the vehicle to transport children regardless of a label that tells them that the vehicle is unsuitable for child restraints. (See response, above, to Cosvam's request to label vehicles.) A child restraint anchorage system in rear seating positions will provide benefits to the children using them.

The Alliance asks us to confirm its understanding that the new standard does not apply to tether anchorages and child restraint anchorage systems installed in vehicles not listed in the *Application* section of the standard (S2). That understanding is correct. We had proposed in the NPRM the issuance of a separate standard establishing requirements for the strength and location of tether anchorages, and the application of this standard to any tether anchorage installed in new passenger cars and multipurpose passenger vehicles, trucks and buses (see proposed Standard No. 210b, 62 FR 7885). However, the final rule applies to vehicles listed in the application section of Standard No. 225, and not to anchorages installed in new vehicles. The Alliance is correct that S4.1 of the standard (which requires that each tether anchorage and each child restraint anchorage system installed, either voluntarily or pursuant to Standard No. 225, in any new vehicle manufactured on or after September 1, 1999, shall comply with the configuration, location and strength requirements of the standard) does not limit the voluntary installation of child restraint anchorage systems or tether anchorages in vehicles not listed in S2 of the standard. Although anchorage systems installed in these vehicles will not be subject to the standard's requirements, they will be subject to our defect authority. Manufacturers would therefore have to ensure that the systems are free of safety-related defects. (The agency encourages manufacturers to ensure that anchorage systems installed in vehicles not subject to Standard No. 225 nonetheless voluntarily meet the performance requirements of the standard to ensure that the systems offer adequate crash protection. A parent is likely to assume that such systems meet minimum performance requirements.)

The Alliance, and Ford, in a separate petition, ask NHTSA to clarify S4.1 of the standard to permit what petitioners call ''ISO-compatible anchorage systems.'' The Alliance explains that:

> Installing two child restraint anchorage systems in the two outboard positions of a typical three-passenger rear seat creates a third non-complying ''child restraint anchorage system'' at the center seat position. This anchorage system consists of the tether anchorage and the inboard lower anchors of the two child restraint anchorage systems at the outboard seating positions. This anchorage system sometimes referred to as ISO-compatible, can be used to install child restraints with webbing-based attachment systems, but it does not meet all the technical requirements of the final rule. * * *
>
> S4.1 appears to prohibit installing child restraint anchorage systems at both outboard-seating positions because doing so would create a non-complying voluntary anchorage system at the center seat position. The essential difference between complying anchorage systems and ISO-compatible anchorage systems is that the lateral spacing of anchors is not 280 mm in an ISO-compatible anchorage. Because of non-standard lateral spacing, ISO-compatible anchorage systems cannot be used to install child restraints using rigid attachments. But these ISO-compatible anchorage systems can typically be used to install child restraints equipped with webbing-based round-bar attachments. * * * Because of non-standard spacing, the SFAD 2 cannot be used to test the strength and stiffness of these lower anchors and tether anchor as a system, but the lower anchors would be subject to testing of the anchorage systems for the outboard position. Alliance members would test the center tether anchorage using the SFAD 1 or the 5.3 kN single-strap test.
>
> Some Alliance members had planned to treat these center anchor systems as voluntary, non-standard anchorage systems and to advise customers that these center positions could be used to secure child restraints equipped with webbing-mounted attachments. No Alliance members plan to test these ISO-compatible anchorage systems as a separate system, because all parts of such a system are subject to testing as a tether anchorage or as part of the outboard child restraint anchorage system. * * *
>
> The Alliance petitions the agency to clarify S4.1 to allow voluntary ''ISO-compatible'' systems. Such systems should not be subject to the position and spacing requirements of FMVSS 225, provided the manufacturer provides instructions for the proper installation of child restraints in these positions in the vehicle owner's manual. * * *

Standard No. 225 does not prohibit the installation of these so-called ''ISO-compatible'' anchorage systems. An ISO-compatible system is a system consisting of lower anchorage bars from adjacent, properly-designed, child restraint anchorage systems. We do not consider an ISO-compatible anchorage system to be a ''child restraint anchorage system'' under Standard No. 225, because it does not have lower anchorages of its own. The strength of the tether anchorage of the ISO-compatible system will be tested using the SFAD 1 (attached by the vehicle's belt system at the seating position where the ISO-compatible system is located), or the single-strap (until 2004, see S6.3.2).

The National Truck Equipment Association (NTEA) asks us to exclude shuttle-type buses from the standard. Petitioner states that these vehicles are most often used as hotel or rental car shuttle vehicles and as paratransit vehicles. Petitioner believes that these vehicles should be excluded because almost all of the seats in them are side-facing, and ''[w]e don't know that it is appropriate for child restraint seats to be placed in a side-facing seat.'' NTEA also states that the only forward-facing passenger seats in these vehicles is often the rear bench, which is placed against the back wall of the vehicle. Petitioner believes that there is no practicable method of anchoring the tether strap.

We agree that it is unlikely that child restraints will be used in shuttle type buses (with side-facing seats along the side perimeter walls of the passenger compartment and whose only forward facing seating positions in the passenger compartment are those along the rear wall of the bus). These buses also have limited use geographically, moving people relatively short distances. A tether anchorage may also be more costly to install in the rear row of these buses, given the proximity of the rear bench to the rear wall of the vehicle. In view of these factors, the combination of higher costs and much lower usage probably makes application of the standard not cost beneficial. We are thus excluding ''shuttle buses'' from the standard. A definition of shuttle bus is added to the standard to read as follows: *Shuttle bus* means a bus with only one row of forward-facing seating positions rearward of the driver's seat.

C. Written instructions. The Alliance and Porsche Cars North America petitioned to delete S12 of the standard, which requires vehicle manufacturers to provide written instructions for using the tether anchorage and the child restraint anchorage system in the vehicle. Included among the required instructions are those that provide ''a step-by-step procedure, including diagrams, for properly attaching a child restraint system to the tether anchorages and the child restraint anchorage system.'' The Alliance states that S12 requires

> too much detail for a vehicle owner's manual because of the great variety of possible child restraint attachments on the market, even if the vehicle manufacturer could know in advance, before the publication of its owner's manual, the details regarding each child restraint attachment likely to be offered during the vehicle's anticipated period of useful service. Obviously, no manufacturer will have such knowledge.

General instructions on using a child restraint anchorage system are required by the introductory paragraph of S12. Instructions on using the child restraint anchorage system will help increase the likelihood that a child restraint anchorage system and a tether anchorage would be properly used. However, the agency recognizes that it may be difficult for vehicle manufacturers to anticipate how child restraint manufacturers will design the components that attach to the lower anchorage bars of a child restraint anchorage system. With these considerations in mind, we have amended S12(c) to delete the requirement for detailed instructions on attaching a child restraint to a child restraint anchorage system. However, detailed instructions on attaching a tether strap to the tether anchorage will still be required. This requirement is being retained because the child restraint standard (Standard No. 213) specifies the configuration and geometry of the tether hook. Vehicle manufacturers, therefore, can develop their written instructions with the tether hook design in mind. We have also declined to delete S12 entirely, because S12(a) and (b) will help parents identify which seating positions have the child restraint anchorage systems, how to access the anchorages if they are covered, and how to interpret the marks required by S9.5(a) of the standard. This information will help increase the likelihood that the anchorages will be properly used.

b. Requirements for Child Restraints Relating to September 1, 1999 Compliance Date

1. Audible or Visual Indication of Attachment

Kolcraft Enterprises petitioned for reconsideration asking NHTSA to clarify or reconsider S5.9(d) of the final rule. That section requires each child restraint system, other than a system with hooks for attaching to the lower anchorages of the child restraint anchorage system, to provide either an audible indication when each attachment to the lower anchorages becomes fully latched or attached, or a visual indication that all attachments to the lower anchorages are fully latched or attached. Visual indications shall be detectable under normal daylight lighting conditions.

Kolcraft states that:

> While this provision makes sense after September 1, 2002 when each new child restraint must be equipped with lower anchorage attachment components, compliance with the provision is impracticable in advance of that date (except for child restraints that are voluntarily equipped with lower anchorage attachment components in advance of the regulatory deadline). Yet, it appears that Section 5.9(d) takes effect for all child restraints manufactured on or after September 1, 1999, because the provision does not explicitly specify a later effective date.

NHTSA did not intend to imply that child restraints that do not have the means for attaching to the lower bars of a vehicle's child restraint anchorage system must provide the audible or visual indicators described in S5.9(d). Such a requirement does not make sense for child restraints that do not have the attachments. For a child restraint that has such attachments, the audible or visual indicators would be needed to better ensure that parents properly latch the attachments. Accordingly, we have revised S5.9(d) to make clear that it applies only to child restraints with components that enable the restraints to be securely fastened to the lower anchorages of a child restraint anchorage system (other than child restraints with hooks for attaching to the lower anchorages).

2. Attachments Must be Permanent

Indiana Mills & Manufacturing (IMMI) has petitioned us to reconsider the requirement in S5.9(a) of Standard No. 213 that each child restraint system must have the components that attach to the lower bars of a child restraint anchorage system permanently attached to the child restraint. We are denying this petition.

IMMI states that it believes that almost all child restraint manufacturers will use a snap hook (on a strap) to fasten the child restraint system to the lower bars. IMMI believes that ''a snap hook and adjuster is virtually impossible to release when excessively tightened.'' To overcome this perceived problem, petitioner wishes to put a seat belt type push-button buckle on the webbing strap that connects to the snap

hook. A latch plate would be permanently welded on to the child restraint to couple with and unbuckle from the buckle on the snap hook strap.

This design would not meet S5.9(a) of Standard No. 213 because the snap hook is not permanently attached to the child restraint. While IMMI believes that the design would make it easier to unfasten a child restraint from the lower bars, we are concerned about the likelihood that some parents will lose the non-permanent piece, which will render them unable to use the child restraint anchorage system. In the NPRM for the March 5, 1999 final rule, we raised the issue of whether a final rule should encompass a scheme whereby a non-permanent piece (similar to IMMI's webbing piece with the snap hook on one end and buckle on the other) could be provided to consumers by vehicle manufacturers to enable parents to adapt a child restraint anchorage system for use with child restraints not originally made for such a system. Commenters overwhelmingly opposed an adapter, believing that the adapter would be lost or misused by consumers. (This issue is discussed in the final rule at 64 FR 10798–10799.) Because of those comments, we decided to mandate a single child restraint anchorage system, and to require in S5.9(a) of Standard No. 213 that the components that attach to the lower bars must be permanently attached to the child restraint. With IMMI's system, some parents might forget or lose the snap hook piece, and would not be able to attach the child restraint to the anchorage system. We continue to believe that the ''permanently attached'' requirement serves a safety need by increasing the likelihood that the components will be present when the child restraint needs to be installed in a child restraint anchorage system.

With regard to IMMI's belief that excessively tightened snap hooks will be virtually impossible to release, the March 1999 final rule added a requirement to Standard No. 213 that the belt webbing has to be adjustable so that the child restraint can be tightly attached to the vehicle (S5.9(d)). We believe that most, if not all adjusters will also be capable of releasing the tension of the belt so that the snap hook can be easily unfastened. If we were to find that parents are having difficult releasing snap hooks, we will consider rulemaking possibly to require a release mechanism that will facilitate the easy release of highly tightened snap hooks.

Ford states in its petition that although it supports the intent of the requirement in S5.9(a) that components must be ''permanently attached,'' Ford believes that the meaning of what constitutes permanently attached needs to be clarified. Ford states on page 8:

> Are existing child restraint belt harnesses ''permanently attached,'' even though they can be removed for repositioning? For example, is a buckle and crotch strap assembly ''permanently attached'' if it can be removed for relocation to an alternate position that is further forward? Are belts on a hybrid harness booster that are designed to be removed when the restraint is converted into a belt-positioning booster ''permanently attached?'' Can lower anchor attachments be removable so they can be relocated to different positions depending on whether the child restraint is being used rear-or forward-facing? Because attachment to lower anchors is not appropriate for belt-positioning boosters, it would be appropriate to allow lower anchor attachments to be removed from harness boosters when they are converted into belt-positioning boosters.

We have granted this part of the petition to clarify the meaning of permanently attached. For maximum design flexibility in designing the components on child restraints that attach to the lower bars, child restraint manufacturers might want consumers to move or remove the components that attach to the lower bars. Opposed to this is the interest in ensuring that the components are present on child restraints when needed. To balance these concerns, we have amended S5.9(a) to add a sentence that ''The components must be attached such that they can only be removed by use of a tool, such as a screwdriver.'' We believe that this provision will permit child restraint manufacturers some design flexibility, yet will limit how easily the components can be removed. Limiting easy removal of the components will increase the likelihood that components are in place when needed.

c. Reasons for the Effective Date of This Rule

Section 30111(d) of our motor vehicle safety statute (Title 49 U.S.C. Chapter 301) requires that a safety standard may not become effective before the 180th day after the standard is prescribed or later than one year after it is prescribed, unless we find, for good cause shown, that a different effective date is in the public interest and publish the reasons for the finding. The effective date for this final rule is September 1, 1999, which is the same effective date as for the March 1999 final rule which today's rule amends. Today's rule does not impose new requirements on manufacturers but permits them to begin meeting, at the manufacturer's option, alternative strength requirements for an interim period. This rule also clarifies test procedures specified in the March 1999 final rule. Because today's rule provides an alternative to manufacturers which they may begin meeting in lieu of the requirements which come into effect September 1, 1999, and clarifies test requirements that come into effect September 1, it is in the public interest for the effective dates for today's rule to be the same as that of the March 1999 rule: September 1, 1999.

IV. Corrections to Final Rule

This document makes the following corrections to the March 1999 final rule which have been brought to our attention by petitioners and by other parties:

- Standard No. 213 is amended by correcting the table to S5.1.3.1(a) to show that backless booster seats are excluded from the new 720 mm head excursion limit. These seats were excluded because, as discussed in the preamble, the manufacturers of backless booster seats may have practicability problems in meeting the requirement. In addition, S5.9(a) of the standard is corrected to specify that for rear-facing child restraints with detachable bases, only the base need have the permanently attached components that enable the restraint to be securely fastened to the lower bars of a child restraint anchorages system (as opposed to requiring the components on both the base and the restraint system itself). The agency intended to specify this limitation in Standard No. 213 (see 64 FR at 10806–10807), but did not do so in the regulatory text of the final rule.
- Figures 1B and 1B′ of Standard No. 213 are corrected by revising some of the dimensions for the test assembly.
- Paragraph S4.1 of Standard No. 225 is corrected to specify that voluntarily-installed lower bars must meet marking requirements along with configuration, location and strength requirements of the standard. We stated in the preamble to the final rule that we were specifying marking requirements: ''The agency has drafted this final rule to apply the standard's configuration, location, strength and marking requirements to any additional voluntarily-installed rigid bar anchorage system installed on a new school bus, or on any other vehicle.'' (64 FR at 10803, column 2.) However, we inadvertently did not refer to marking requirements in S4.1.
- S9.4.1 of Standard No. 225 is corrected by adding a tolerance for defining the vertical longitudinal plane for the forward direction force. The tolerance is from the draft ISO standard. In addition, we added S9.4.1.1 to specify the vertical angles for the forward and lateral direction forces. The

specified angles are also from the draft ISO standard.

- S11(a) and (b) of Standard No. 225 are corrected by adding a 135 N rearward force to remove slack or tension to the device prior to its loading. The specified force is from the draft ISO standard.
- The following figures in Standard No. 225 are corrected: Figure 1 (added yaw/pitch/roll); Figure 2 (added mass of CRF and corrected dimensions on top view); Figures 3 to 11 (darkened shading); Figure 15 and 16 (corrected dimension that Transport Canada also has on top view); Figure 17 (added 6.5 mm diameter on detail B, deleted point Y on detail A, corrected 270 dimension on side view and added stiffness details to side and back views and to note 5); Figure 18 (made force application attachment as in Figure 17); and Figure 19 (degree sign).

V. Rulemaking Analyses and Notices

a. Executive Order 12866 (Regulatory Planning and Review) and DOT Regulatory Policies and Procedures

This rulemaking document was not reviewed under E.O. 12866, ''Regulatory Planning and Review.'' We have considered the impacts of this rulemaking action and have determined that this action is not ''significant'' within the meaning of the Department of Transportation's regulatory policies and procedures. We have further determined that the effects of this rulemaking are sufficiently minimal that preparation of a full preliminary regulatory evaluation is not warranted. We believe that manufacturers will be minimally affected by this rulemaking because it does not change manufacturers' responsibilities to begin installing tether anchorages and the lower bars of child restraint anchorage systems on the compliance dates of the March 5, 1999 final rule. The rule instead permits manufacturers to begin meeting, at the manufacturer's option, alterative strength requirements for an interim period. We believe there will be no additional testing costs associated with this final rule. This rule clarifies testing requirements but does not impose new test burdens. The method of testing tether anchorages and the lower bars of child restraint anchorage systems will be basically the same as they are under the March 1999 final rule. Further, since the amendment is permissive in nature, there are no costs associated with it.

b. Regulatory Flexibility Act

NHTSA has considered the effects of this rulemaking action under the Regulatory Flexibility Act. I hereby certify that it will not have a significant economic impact on a substantial number of small entities. This rule affects motor vehicle manufacturers, almost all of which are not small business. Even if there are motor vehicle manufacturers that qualify as small entities, this rule will not have a significant economic impact on them because these amendments are generally permissive in nature, and have no costs associated with it. Accordingly, the agency has not prepared a regulatory flexibility analysis.

c. Executive Order 12612 (Federalism)

This rulemaking action has been analyzed in accordance with the principles and criteria contained in Executive Order 12612, and the agency has determined that this rule does not have sufficient federalism implications to warrant the preparation of a Federalism Assessment.

d. Unfunded Mandates Reform Act

The Unfunded Mandates Reform Act of 1995 (Public Law 104–4) requires agencies to prepare a written assessment of the costs, benefits and other effects of proposed or final rules that include a Federal mandate likely to result in the expenditure by State, local or tribal governments, in the aggregate, or by the private sector, of more than $100 million annually. This rule does not impose any unfunded mandates as defined by that Act.

e. National Technology Transfer and Advancement Act

Under the National Technology Transfer and Advancement Act of 1995 (NTTAA)(Public Law 104–113), ''all Federal agencies and departments shall use technical standards that are developed or adopted by voluntary consensus standards bodies, using such technical standards as a means to carry out policy objectives or activities determined by the agencies and departments.'' This final rule permits manufacturers to meet the specifications in the draft ISO standard for child restraint anchorage systems during an interim period, as an alternative to meeting the requirements of the March 1999 final rule. The International Organization for Standardization (ISO) is a worldwide voluntary federation of ISO member bodies. By permitting the alternative in the short run, this rule is consistent with the NTTAA's goals of encouraging long-term growth for U.S. enterprises and promoting efficiency and economic competition through harmonization of standards.

f. National Environmental Policy Act

NHTSA has analyzed this rulemaking action for the purposes of the National Environmental Policy Act. The agency has determined that implementation of this action will not have any significant impact on the quality of the human environment.

g. Executive Order 12778 (Civil Justice Reform)

This rule does not have any retroactive effect. Under section 49 U.S.C. 30103, whenever a Federal motor vehicle safety standard is in effect, a state may not adopt or maintain a safety standard applicable to the same aspect of performance which is not identical to the Federal standard, except to the extent that the state requirement imposes a higher level of performance and applies only to vehicles procured for the State's use. 49 U.S.C. 30161 sets forth a procedure for judicial review of final rules establishing, amending or revoking Federal motor vehicle safety standards. That section does not require submission of a petition for reconsideration or other administrative proceedings before parties may file suit in court.

h. Paperwork Reduction Act.

This rule does not contain any collection of information requirements requiring review under the Paperwork Reduction Act of 1995 (Public Law 104–13). We noted in the March 1999 final rule that the phase-in production reporting requirements described in that rule are considered to be information collection requirements as defined by the Office of Management and Budget (OMB) in 5 CFR part 1320. NHTSA will be submitting a clearance request to OMB for review and clearance in the near future. The agency notes that the clearance for the information collection requirements of Standard 213, ''Child Restraint Systems,'' will expire September 1, 2000 (OMB Clearance No. 2127–0511). NHTSA anticipates it will submit a request to OMB to renew the clearance of that standard and, at or near the same time, will be submitting an information collection request to OMB for review and clearance of the information collections in the March 1999 final rule.

Pursuant to the Paperwork Reduction Act and OMB's regulations at 5 CFR section 1320.5(b)(2), NHTSA informs the potential persons who are to respond to the collection of information that such persons are not required to respond to the collection of information unless it displays a currently valid OMB control number. The agency's current

OMB control numbers are displayed in NHTSA's regulations at 49 CFR Part 509, *OMB Control Numbers for Information Collection Requirements*.

List of Subjects in 49 CFR Part 571

Imports, Incorporation by reference, Motor vehicle safety, Reporting and recordkeeping requirements, Tires.

In consideration of the foregoing, NHTSA amends 49 CFR Chapter V as set forth below.

PART 571—FEDERAL MOTOR VEHICLE SAFETY STANDARDS

1. The authority citation for Part 571 is revised to read as follows:

Authority: 49 U.S.C. 322, 30111, 30115, 30166 and 30177; delegation of authority at 49 CFR 1.50.

2. In § 571.213—

a. S5.1.3.1 as amended at 64 FR 10815, effective September 1, 1999, is amended by revising ''Table to S5.1.3.1(A)—Add-On Forward-Facing Child Restraints'';

b. S5.9(a) and (d) are revised; and

c. Figure 1B and Figure 1B′, as amended at 64 FR 10820, effective September 1, 1999, are revised.

The revised text reads as follows:

§ 571.213 Standard No. 213; Child restraint systems.

* * * * *

BILLING CODE 4910–59–P

Table to S5.1.3.1(a) - Add-On Forward-Facing Child Restraints

When this type of child restraint	is tested in accordance with--	these excursion limits apply	*Explanatory note*: In the test specified in 2nd column, the child restraint is attached to the test seat assembly in the manner described below, subject to certain conditions
Harnesses, backless booster seats and restraints designed for use by physically handicapped children	S6.1.2(a)(1)(i)(A)	Head 813 mm; Knee 915 mm	Attached with lap belt; in addition, if a tether is provided, it is attached
Belt-positioning seats	S6.1.2(a)(1)(ii)	Head 813 mm; Knee 915 mm	Attached with lap and shoulder belt; no tether is attached
All other child restraints, manufactured before September 1, 1999	S6.1.2(a)(1)(i)(B)	Head 813 mm; Knee 915 mm	Attached with lap belt; no tether is attached
All other child restraints, manufactured on or after September 1, 1999	S6.1.2(a)(1)(i)(B)	Head 813 mm; Knee 915 mm	Attached with lap belt; no tether is attached
	S6.1.2(a)(1)(i)(D) (beginning September 1, 2002)		Attached to lower anchorages of child restraint anchorage system; no tether is attached
	S6.1.2(a)(1)(i)(A)	Head 720 mm; Knee 915 mm	Attached with lap belt; in addition, if a tether is provided, it is attached
	S6.1.2(a)(1)(i)(C) (beginning September 1, 2002)		Attached to lower anchorages of child restraint anchorage system; in addition, if a tether is provided, it is attached

BILLING CODE 4910–59–C

* * * * *

S5.9 *Attachment to child restraint anchorage system.*

(a) Each add-on child restraint system manufactured on or after September 1, 2002, other than a car bed, harness and belt-positioning seat, shall have components permanently attached to the system that enable the restraint to be securely fastened to the lower anchorages of the child restraint anchorage system specified in Standard No. 225 (§ 571.225) and depicted in Drawing Package 100–1000 with Addendum A: Seat Base Weldment (consisting of drawings and a bill of materials) dated October 23, 1998, (incorporated by reference; see § 571.5). The components must be attached such that they can only be removed by use of a tool, such as a screwdriver. In the case of rear-facing child restraints with detachable bases, only the base is required to have the components.

* * * * *

(d) Beginning September 1, 1999, each child restraint system with components that enable the restraint to be securely fastened to the lower anchorages of a child restraint anchorage system, other than a system with hooks for attaching to the lower anchorages, shall provide either an indication when each attachment to the lower anchorages becomes fully latched or attached, or a visual indication that all attachments to the lower anchorages are fully latched or attached. Visual indications shall be detectable under normal daylight lighting conditions.

* * * * *

BILLING CODE 4910–59–P

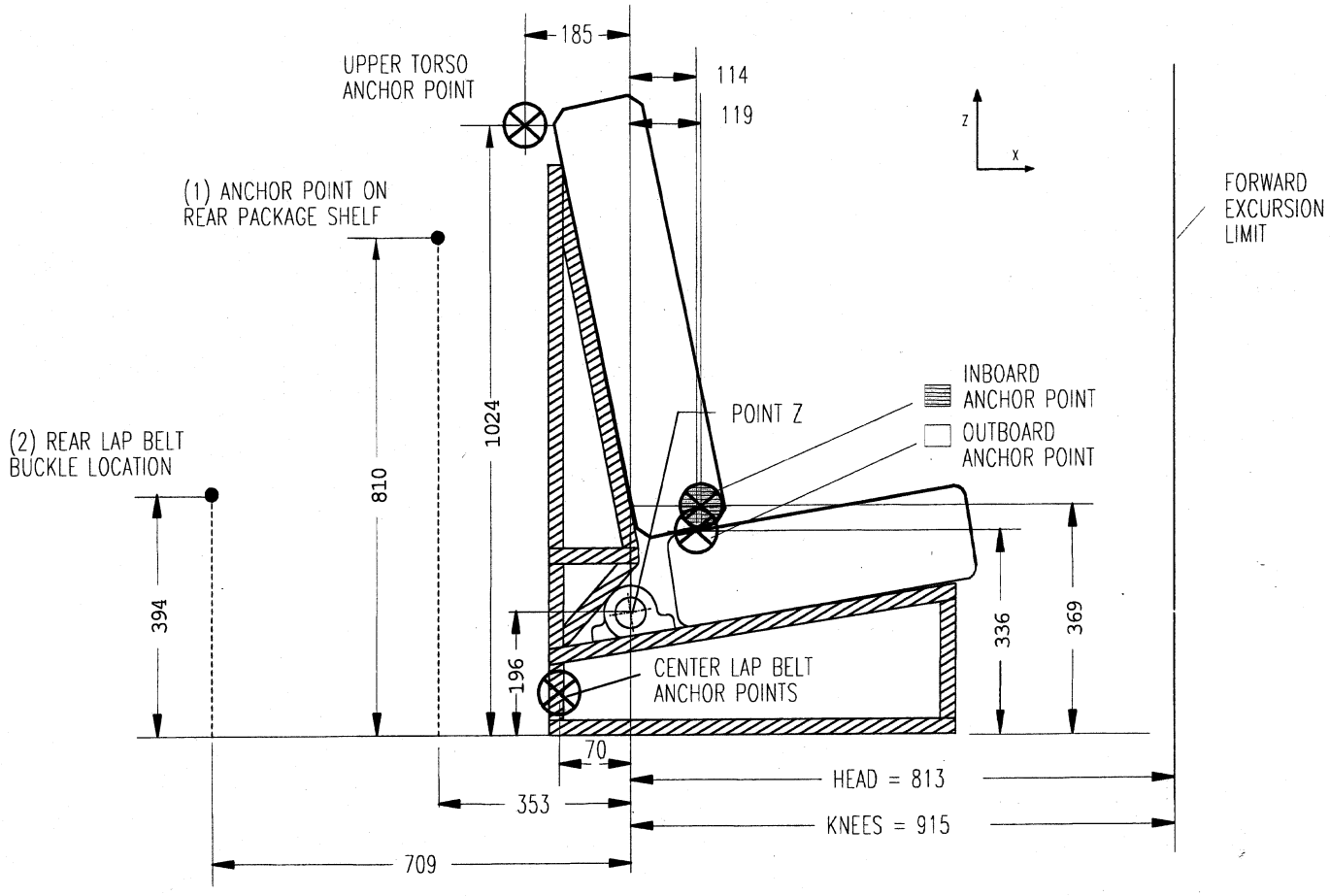

NOTES:
(1) Anchor Point on Rear Package Shelf Located 544 mm Right or Left of the Center SORL as shown in Fig. 1A
(2) Rear Lap Belt Buckle Located 178 mm Right or Left of the Center SORL as shown in Fig. 1A

METRIC (mm)
NOT TO SCALE

LOCATION OF BELT ANCHORAGE POINTS AND FORWARD EXCURSION LIMITS ON THE STANDARD SEAT ASSEMBLY

Figure 1B

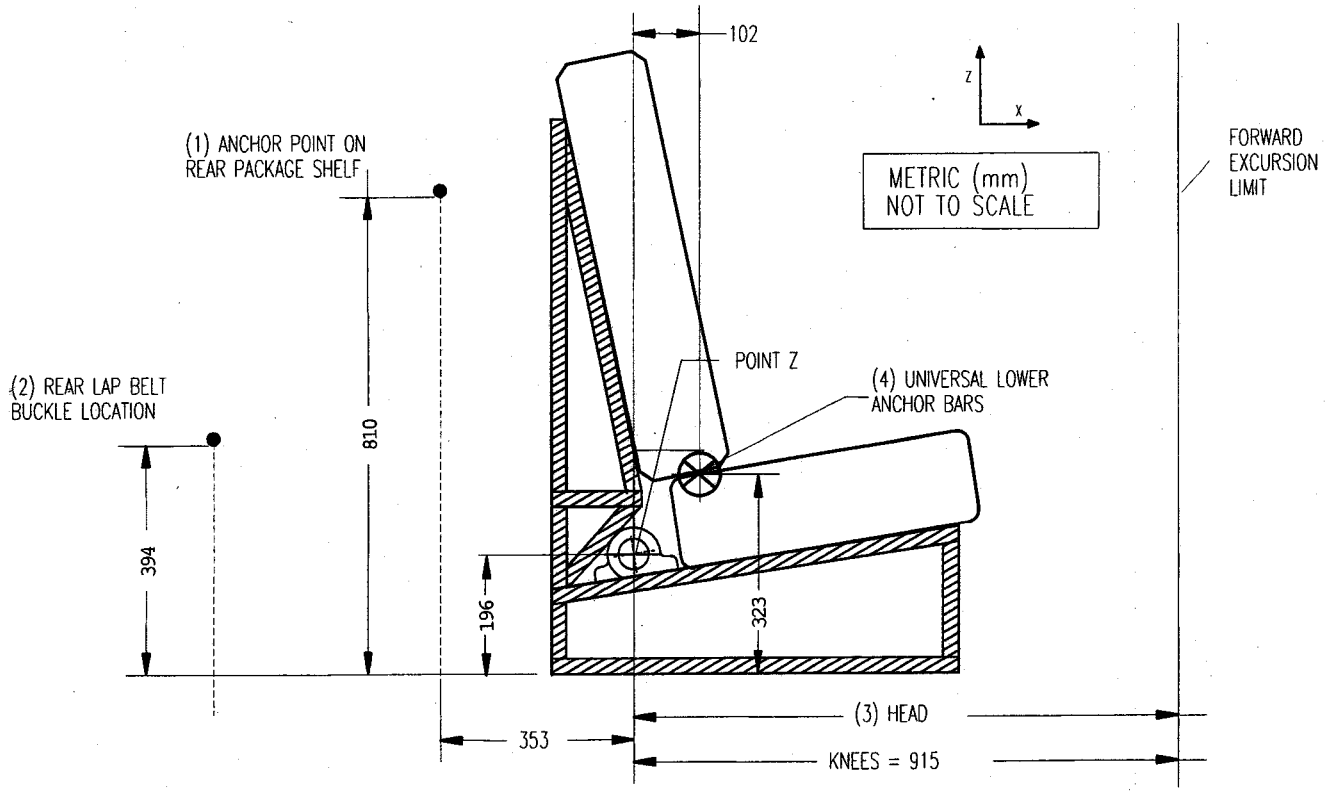

NOTES:
(1) Anchor Point on Rear Package Shelf Located 544 mm Right or Left of the Center SORL as shown in Fig. 1A'
(2) Rear Lap Belt Buckle Located 178 mm Right or Left of the Center SORL as shown in Fig. 1A'
(3) Head Excursion Limit is: (i) 720 mm with Tether Attached and (ii) 813 mm with Tether Unattached
(4) Universal Lower Anchor Bars Located 102 mm Forward of Pt Z and 279 mm Upward from Floor

LOCATION OF UNIVERSAL CHILD RESTRAINT ANCHORAGE SYSTEM AND FORWARD EXCURSION LIMITS FOR THE STANDARD SEAT ASSEMBLY
Figure 1B'

BILLING CODE 4910–59–C

3. Section 571.225 is amended by:

a. Revising S2, and by amending S3 by adding, in alphabetical order, a definition for ''Seat bight'' and for ''Shuttle bus';

b. Revising S4.1, S4.2(a), S4.2(b), S4.2(c), S4.3(a)(1), S4.3(a)(2), S4.3(b)(1), S4.3(b)(2), S4.3(b)(3), S4.4(a), S4.4(a)(1), S4.4(a)(2), S4.4(b), and S4.4(c);

c. Adding S4.5;

d. Revising S5(c)(1)(ii) and (c)(2) in its entirety;

e. By designating the text of S6.2 as S6.2.1 and revising the introductory text, and adding new text to S6.2 and new S6.2.2, S6.2.2.1 and S6.2.2.2;

f. Adding text to S6.3, revising S6.3.1 in its entirety, and adding S6.3.4 and S6.3.4.1 through S6.3.4.4;

g. Revising S7(a), S8, S8.1, and the introductory paragraph of S8.2;

h. Amending S9 by adding text following the heading of S9;

i. Revising S9.1.1(a) and S9.1.1(f); and adding S9.3(c);

j. Revising the introductory paragraph of S9.4.1 and revising S9.4.1(a), and adding S9.4.1.1;

k. Revising S11(a), S11(b), S12(b) and S12(c);

l. Adding S15, S15.1, S15.1.1, S15.1.2, S15.1.2.1, S15.1.2.2, S15.2, S15.2.1, S15.2.2, S15.3, S15.3.1, S15.3.2, S15.3.3 and S15.3.4;

m. Revising Figures 1 through 11, and Figures 15 through 19; and

n. Adding a Figure 1A between Figures 1 and 2.

The revised and added text and figures read as follows:

§ 571.225 Standard No. 225; Child restraint anchorage systems.

* * * * *

S2. *Application.* This standard applies to passenger cars; to trucks and multipurpose passenger vehicles with a gross vehicle weight rating (GVWR) of 3,855 kilograms (8,500 pounds) or less, except walk-in van-type vehicles and vehicles manufactured to be sold exclusively to the U.S. Postal Service; and to buses (including school buses) with a GVWR of 4,536 kg (10,000 lb) or less, except shuttle buses.

* * * * *

S3. Definitions.

* * * * *

Seat bight means the area close to and including the intersection of the surfaces of the vehicle seat cushion and the seat back.

Shuttle bus means a bus with only one row of forward-facing seating positions rearward of the driver's seat.

* * * * *

S4.1 Each tether anchorage and each child restraint anchorage system installed, either voluntarily or pursuant to this standard, in any new vehicle manufactured on or after September 1, 1999, shall comply with the configuration, location, marking and strength requirements of this standard. The vehicle shall be delivered with written information, in English, on how to appropriately use those anchorages and systems.

S4.2 * * *

(a) Each vehicle with three or more forward-facing rear designated seating positions shall be equipped with a tether anchorage conforming to the requirements of S6 at no fewer than three forward-facing rear designated seating positions. The tether anchorage of a child restraint anchorage system may count towards the three required tether anchorages. In each vehicle with a forward-facing rear designated seating position other than an outboard designated seating position, at least one tether anchorage (with or without the lower anchorages of a child restraint anchorage system) shall be at such a designated seating position. In a vehicle with three or more rows of seating positions, at least one of the tether anchorages (with or without the lower anchorages of a child restraint anchorage system) shall be installed at a forward-facing seating position in the second row if such a forward-facing seating position is available in that row.

(b) Each vehicle with not more than two forward-facing rear designated seating positions shall be equipped with a tether anchorage conforming to the requirements of S6 at each forward-facing rear designated seating position. The tether anchorage of a child restraint anchorage system may count toward the required tether anchorages.

(c) Each vehicle without any forward-facing rear designated seating position shall be equipped with a tether anchorage conforming to the requirements of S6 at each front forward-facing passenger seating position.

S4.3 * * *

(a) * * *

(1) Each vehicle with three or more forward-facing rear designated seating positions shall be equipped with a child restraint anchorage system conforming to the requirements of S9 at not fewer than two forward-facing rear designated seating positions. In a vehicle with three or more rows of seating positions, at least one of the child restraint anchorage systems shall be at a forward-facing seating position in the second row if such a forward-facing seating position is available in that row.

(2) Each vehicle with not more than two forward-facing rear designated seating positions shall be equipped with a child restraint anchorage system conforming to the requirements of S9 at each forward-facing rear designated seating position.

(b) * * *

(1) Each vehicle with three or more forward-facing rear designated seating positions shall be equipped with a tether anchorage conforming to the requirements of S6 at no fewer than three forward-facing rear designated seating positions. The tether anchorage of a child restraint anchorage system may count towards the three required tether anchorages. In each vehicle with a forward-facing rear designated seating position other than an outboard designated seating position, at least one tether anchorage (with or without the lower anchorages of a child restraint anchorage system) shall be at such a designated seating position. In a vehicle with three or more rows of seating positions, at least one of the tether anchorages (with or without the lower anchorages of a child restraint anchorage system) shall be installed at a forward-facing seating position in the second row if such a forward-facing seating position is available in that row.

(2) Each vehicle with not more than two forward-facing rear designated seating positions shall be equipped with a tether anchorage conforming to the requirements of S6 at each forward-facing rear designated seating position. The tether anchorage of a child restraint anchorage system may count toward the required tether anchorages.

(3) Each vehicle without any forward-facing rear designated seating position shall be equipped with a tether anchorage conforming to the requirements of S6 at each front passenger seating position.

S4.4 * * *

(a) Each vehicle with three or more forward-facing rear designated seating positions shall be equipped as specified in S4.4(a)(1) and (2).

(1) Each vehicle shall be equipped with a child restraint anchorage system conforming to the requirements of S9 at not fewer than two forward-facing rear designated seating positions. At least one of the child restraint anchorage systems shall be installed at a forward-facing seating position in the second row in each vehicle that has three or more rows, if such a forward-facing seating position is available in that row.

(2) Each vehicle shall be equipped with a tether anchorage conforming to the requirements of S6 at a third forward-facing rear designated seating position. The tether anchorage of a child

restraint anchorage system may count towards the third required tether anchorage. In each vehicle with a forward-facing rear designated seating position other than an outboard designated seating position, at least one tether anchorage (with or without the lower anchorages of a child restraint anchorage system) shall be at such a designated seating position.

(b) Each vehicle with not more than two forward-facing rear designated seating positions shall be equipped with a child restraint anchorage system conforming to the requirements of S9 at each forward-facing rear designated seating position.

(c) Each vehicle without any forward-facing rear designated seating position shall be equipped with a tether anchorage conforming to the requirements of S6 at each front forward-facing passenger seating position.

S4.5 As an alternative to complying with the requirements of S4.2 through S4.4 that specify the number of tether anchorages that are required in a vehicle and the designated seating positions for which tether anchorages must be provided, a vehicle manufactured from September 1, 1999 to August 31, 2001 may, at the manufacturer's option (with said option irrevocably selected prior to, or at the time of, certification of the vehicle), meet the requirements of this S4.5. This alternative ceases to be available on and after September 1, 2001. A tether anchorage conforming to the requirements of S6 shall be installed—

(a) for each designated seating position, other than that of the driver, in a vehicle that has only one row of designated seating positions;

(b) for each forward-facing designated seating position in the second row of seating positions in a passenger car or truck;

(c) for each of any two forward-facing designated seating positions in the second row of seating positions in a multipurpose passenger vehicle that has five or fewer designated seating positions; and,

(d) for each of any three forward-facing designated seating positions that are located to the rear of the first row of designated seating positions in a multipurpose passenger vehicle that has six or more designated seating positions.

* * * * *

S5. *General exceptions.*

* * * * *

(c)(1) * * *

(ii) Has an air bag on-off switch meeting the requirements of S4.5.4 of Standard No. 208 (§ 571.208), shall have a child restraint anchorage system for a designated passenger seating position in the front seat, instead of only a tether anchorage. In the case of convertibles, the front designated passenger seating position need have only the two lower anchorages meeting the requirements of S9 of this standard.

(2) Each vehicle that—

(i) Has a rear designated seating position and meets the conditions in S4.5.4.1(b) of Standard No. 208 (§ 571.208); and,

(ii) Has an air bag on-off switch meeting the requirements of S4.5.4 of Standard 208 (§ 571.208), shall have a child restraint anchorage system for a designated passenger seating position in the front seat, instead of a child restraint anchorage system that is required for the rear seat. In the case of convertibles, the front designated passenger seating position need have only the two lower anchorages meeting the requirements of S9 of this standard.

* * * * *

S6.2 *Location of the tether anchorage.* A vehicle manufactured from September 1, 1999 to August 31, 2001 may, at the manufacturer's option (with said option irrevocably selected prior to, or at the time of, certification of the vehicle), meet the requirements of S6.2.1 or S6.2.2. Vehicles manufactured on or after September 1, 2001 must meet the requirements of S6.2.1 of this standard.

S6.2.1 Subject to S6.2.1.1 and S6.2.1.2, the part of each tether anchorage that attaches to a tether hook shall be located within the shaded zone shown in Figures 3 to 7 of this standard of the designated seating position for which it is installed, such that—

* * * * *

S6.2.2 Subject to S6.2.2.1 and S6.2.2.2, the portion of each user-ready tether anchorage that is designed to bind with a tether strap hook shall be located within the shaded zone shown in Figures 3 to 7 of this standard of the designated seating position for which it is installed, with reference to the H-point of a template described in section 3.1 of SAE Standard J826 (June 1992) (incorporation by reference; see § 571.5), if:

(a) the H-point of the template is located—

(1) At the unique Design H-point of the designated seating position, as defined in section 2.2.11.1 of SAE Recommended Practice J1100 (June 1993) (incorporation by reference; see § 571.5), at the full downward and full rearward position of the seat, or—

(2) In the case of a designated seating position that has a means of affixing the lower portion of a child restraint system to the vehicle, other than a vehicle seat belt, midway between the two lower restraint system anchorages;

(b) the torso line of the template is at the same angle to the transverse vertical plane as the vehicle seat back with the seat adjusted to its full rearward and full downward position and the seat back in its most upright position; and

(c) the template is positioned in the vertical longitudinal plane that contains the H-point of the template.

S6.2.2.1 Until September 1, 2001, the portion of each user-ready tether anchorage that is designed to bind with the tether strap hook may be located in a passenger car or multipurpose passenger vehicle within the shaded zone shown in Figures 8 to 11 of the designated seating position for which it is installed, with reference to the shoulder reference point of a template described in section 3.1 of SAE Standard J826 (June 1992) (incorporation by reference; see § 571.5), if:

(a) the H-point of the template is located—

(1) at the unique Design H-point of the designated seating position, as defined in section 2.2.11.1 of SAE Recommended Practice J1100 (June 1993) (incorporation by reference; see § 571.5), at the full downward and full rearward position of the seat, or—

(2) in the case of a designated seating position that has a means of affixing the lower portion of a child restraint system to the vehicle, other than a vehicle seat belt, midway between the two lower restraint system anchorages;

(b) the torso line of the template is at the same angle to the vertical plane as the vehicle seat back with the seat adjusted to its full rearward and full downward position and the seat back in its most upright position; and

(c) the template is positioned in the vertical longitudinal plane that contains the H-point of the template.

S6.2.2.2 The portion of a user-ready tether anchorage in a vehicle that is designed to bind with the tether strap hook may be located outside the shaded zone referred to in S6.2.2, if no part of the shaded zone is accessible without removing a seating component of the vehicle and the vehicle is equipped with a routing device that—

(a) ensures that the tether strap functions as if the portion of the anchorage designed to bind with the tether strap hook were located within the shaded zone;

(b) is at least 65 mm behind the torso line, in the case of a non-rigid-webbing-type routing device or a deployable routing device, or at least 100 mm

behind the torso line, in the case of a fixed rigid routing device; and

(c) when tested after being installed as it is intended to be used, is of sufficient strength to withstand, with the user-ready tether anchorage, the load referred to in S6.3.4 or S6.3.4.1, as applicable.

S6.3 *Strength requirements for tether anchorages.* Subject to S6.3.2, a vehicle manufactured from September 1, 1999 to August 31, 2001 may, at the manufacturer's option (with said option irrevocably selected prior to, or at the time of, certification of the vehicle), meet the requirements of S6.3.1 or S6.3.4. Subject to S6.3.2, vehicles manufactured on or after September 1, 2001 must meet the requirements of S6.3.1 of this standard.

S6.3.1 Subject to S6.3.2, when tested in accordance with S8, after preloading the device with a force of 500 N, point X of the SFAD must not be displaced horizontally more than 125 mm during the application of the force.

* * * * *

S6.3.4 Subject to subsections S6.3.4.1 and S6.3.4.2, every user-ready tether anchorage in a row of designated seating positions shall, when tested, withstand the application of a force of 10,000 N—

(a) applied by means of one of the following types of test devices, installed as a child restraint system would be installed in accordance with the manufacturer's installation instructions, namely,

(1) SFAD 1, to test a tether anchorage at a designated seating position that does not have a child restraint anchorage system; or

(2) SFAD 2, to test a tether anchorage at a designated seating position that has a child restraint anchorage system;

(b) applied—

(1) in a forward direction parallel to the vehicle's vertical longitudinal plane through the X point on the test device, and,

(2) initially, along a horizontal line or along any line below or above that line that is at an angle to that line of not more than 5 degrees;

(c) approximately linearly over a time, at the option of the vehicle manufacturer, of not more than 30 seconds, at any onset force rate of not more than 135 000 N/s; and

(d) maintained at a 10,000 N level for one second.

S6.3.4.1 Until September 1, 2001, every user-ready tether anchorage in a row of designated seating positions in a passenger car may, when tested, subject to subsection S6.3.4.2, withstand the application of a force of 5,300 N, which force shall be—

(a) applied by means of a belt strap that—

(1) extends not less than 250 mm forward from the vertical plane touching the rear top edge of the vehicle seat back,

(2) is fitted at one end with suitable hardware for applying the force and at the other end with a bracket for the attachment of the user-ready tether anchorage, and

(3) passes over the top of the vehicle seat back as shown in Figure 19 of this standard;

(b) applied—

(1) in a forward direction parallel to the vehicle's longitudinal vertical plane, and

(2) initially, along a horizontal line or along any line below that line that is at an angle to that line of not more than 20 degrees;

(c) attained within 30 seconds, at any onset force rate of not more than 135,000 N/s; and

(d) maintained at a 5,300 N level for one second.

S6.3.4.2 If the zones in which tether anchorages are located overlap and if, in the overlap area, a user-ready tether anchorage is installed that is designed to accept the tether strap hooks of two restraint systems simultaneously, both portions of the tether anchorage that are designed to bind with a tether strap hook shall withstand the force referred to in subsection S6.3.4 or S6.3.4.1, as the case may be, applied to both portions simultaneously.

S6.3.4.3 If a row of designated seating positions has more than one user-ready tether anchorage, the force referred to in S6.3.4, S6.3.4.1 or S6.3.4.2, as the case may be, shall be applied simultaneously in the manner specified in the relevant subsection.

S6.3.4.4 The strength requirement tests shall be conducted with the vehicle seat adjusted to its full rearward and full downward position and the seat back in its most upright position. When SFAD 2 is used in testing and cannot be attached to the lower anchorages with the seat back in this position, adjust the seat back as recommended by the manufacturer in its instructions for attaching child restraints. If no instructions are provided, adjust the seat back to the position that enables SFAD 2 to attach to the lower anchorages that is the closest to the most upright position.

S7. *Test conditions for testing tether anchorages.*

* * * * *

(a) Vehicle seats are adjusted to their full rearward and full downward position and the seat back is placed in its most upright position. When SFAD 2 is used in testing and cannot be attached to the lower anchorages with the seat back in this position, adjust the seat back as recommended by the manufacturer in its instructions for attaching child restraints. If no instructions are provided, adjust the seat back to the position that enables SFAD 2 to attach to the lower anchorages that is the closest to the most upright position.

* * * * *

S8. *Test procedures.* Each vehicle shall meet the requirements of S6.3.1 and S6.3.3 when tested according to the following procedures. Where a range of values is specified, the vehicle shall be able to meet the requirements at all points within the range. For testing specified in the procedures, the SFAD used in the test is connected to the anchorage by means of a steel cable that is fitted at one end with a high strength steel tether hook for attachment to the tether anchorage. The tether hook meets the specifications in Standard No. 213 (§ 571.213) as to the configuration and geometry of tether hooks required by that standard. A second steel cable is connected to the X point through which the test force is applied.

S8.1 Apply the force specified in S6.3.1 as follows—

(a) Use the following specified test device, as appropriate:

(1) SFAD 1, to test a tether anchorage at a designated seating position that does not have a child restraint anchorage system; or,

(2) SFAD 2, to test a tether anchorage at a designated seating position that has a child restraint anchorage system.

(b) Attach the SFAD 1 to the vehicle seat using the vehicle belts or the SFAD 2 to the lower anchorages of the child restraint anchorage system, as appropriate, and attach the test device to the tether anchorage, in accordance with the manufacturer's instructions provided pursuant to S12 of this standard. For the testing specified in this procedure, if SFAD 1 cannot be attached using the vehicle belts because of the location of the vehicle belt buckle, the test device shall be attached by material whose breaking strength is equal to or greater than the breaking strength of the webbing for the seat belt assembly installed as original equipment at that seating position. The geometry of the attachment shall duplicate the geometry, at the pre-load point, of the attachment of the originally installed seat belt assembly. All belt systems used to attach SFAD 1 shall be tightened to a tension of not less than 53.5 N and not more than 67 N, as

measured by a load cell used on the webbing portion of the belt. A rearward force of 135 N ± 15 N shall be applied to the center of the lower front crossmember of SFAD 2 to press the device against the seat back as the fore-aft position of the rearward extensions of the SFAD is adjusted to remove any slack or tension.

(c) Apply the force—

(1) Initially, in a forward direction in a vertical longitudinal plane and through the Point X on the test device; and

(2) Initially, along a line through the X point and at an angle of 10 ± 5 degrees above the horizontal. Apply a preload force of 500 N to measure the angle; and then

(3) Increase the pull force as linearly as practicable to a full force application of 15,000 N in not less than 24 seconds and not more than 30 seconds, and maintain at a 15,000 N level for 1 second.

S8.2 Apply the force specified in S6.3.2 as follows:

* * * * *

S9 *Requirements for the lower anchorages of the child restraint anchorage system.* As an alternative to complying with the requirements of S9, a vehicle manufactured from September 1, 1999 to August 31, 2002 may, at the manufacturer's option (with said option irrevocably selected prior to, or at the time of, certification of the vehicle), meet the requirements in S15 of this standard. Vehicles manufactured on or after September 1, 2002 must meet the requirements of S9 of this standard.

* * * * *

S9.1.1 * * *

(a) Are 6 mm ± .1 mm in diameter;

* * * * *

(f) Are an integral and permanent part of the vehicle or vehicle seat; and

* * * * *

S9.3 * * *

(c) To facilitate installation of the CRF in a vehicle seat, the side, back and top frames of the CRF may be removed for installation in the vehicle, as indicated in Figure 1A of this standard.

* * * * *

S9.4.1 When tested in accordance with S11, the lower anchorages shall not allow point X on SFAD 2 to be displaced horizontally more than 125 mm, after preloading the device, when—

(a) A force of 11,000 N is applied in a forward direction in a vertical longitudinal plane that is parallel (0 ± 5 degrees) to the vehicle's longitudinal centerline; and

* * * * *

S9.4.1.1 Forces described in S9.4.1(a), forward direction, shall be applied with an initial force application angle of 10 ± 5 degrees above the horizontal. Forces described in S9.4.1(b), lateral direction, shall be applied horizontally (0 ± 5 degrees).

* * * * *

S11. Test procedure. * * *

(a) *Forward force direction.* Place SFAD 2 in the vehicle seating position and attach it to the two lower anchorages of the child restraint anchorage system. Do not attach the tether anchorage. A rearward force of 135 ± 15 N shall be applied to the center of the lower front crossbar of SFAD 2 to press the device against the seat back as the fore-aft position of the rearward extensions of the SFAD is adjusted to remove any slack or tension. Apply a preload force of 500 N at point X of the test device. Increase the pull force as linearly as practicable to a full force application of 11,000 N in not less than 24 seconds and not more than 30 seconds, and maintain at an 11,000 N level for 10 seconds.

(b) *Lateral force direction.* Place SFAD 2 in the vehicle seating position and attach it to the two lower anchorages of the child restraint anchorage system. Do not attach the tether anchorage. A rearward force of 135 ± 15 N shall be applied to the center of the lower front crossbar of SFAD 2 to press the device against the seat back as the fore-aft position of the rearward extensions of the SFAD is adjusted to remove any slack or tension. Apply a preload force of 500 N at point X of the test device. Increase the pull force as linearly as practicable to a full force application of 5,000 N in not less than 24 seconds and not more than 30 seconds, and maintain at a 5,000 N level for 10 seconds.

S12. * * *

(b) In the case of vehicles required to be marked as specified in paragraphs S4.1, S9.5(a), or S15.4, explain the meaning of markings provided to locate the lower anchorages of child restraint anchorage systems; and

(c) Include instructions that provide a step-by-step procedure, including diagrams, for properly attaching a child restraint system's tether strap to the tether anchorages.

* * * * *

S15 Alternative to complying with the requirements of S9. As an alternative to complying with the requirements of S9, a vehicle manufactured from September 1, 1999 to August 31, 2002 may, at the manufacturer's option (with said option irrevocably selected prior to, or at the time of, certification of the vehicle), meet the requirements in S15 of this standard. Vehicles manufactured on or after September 1, 2002 must meet the requirements of S9 of this standard.

S15.1 *Dimensions and installation requirements.*

S15.1.1 *General.* The vehicle anchorages are positioned near the seat bight. The location of the anchorages is defined with respect to the CRF. If the vehicle seat is adjustable, it is adjusted as recommended by the vehicle manufacturer for use with child restraint systems.

S15.1.2 *Anchorage dimensions and location*

S15.1.2.1 The lower anchorages shall consist of two bars that—

(a) Are 6 mm ± .1 mm in diameter;

(b) Are straight, horizontal and transverse;

(c) Are not less than 25 mm in length;

(d) Can be connected to, over their entire length, as specified in paragraph S15.1.2.1(c), by the connectors of a child restraint system;

(e) Are 280 mm apart, measured from the center of the length of one bar to the center of the length of the other bar; and

(f) Are an integral and permanent part of the vehicle or vehicle seat.

S15.1.2.2 (a) The anchorage bars are located at the vehicle seating position with the aid of and with respect to the CRF rearward extensions, with the CRF placed against or near the vehicle seat back. With the CRF attached to the anchorages and resting on the seat cushion, the bottom surface shall have attitude angles within the limits in the following table, angles measured relative to the vehicle horizontal, longitudinal and transverse reference planes.

TABLE TO S15.1.2.2(A)

Pitch	15° ± 10°
Roll	0° ± 5°
Yaw	0° ± 10°

Note: An explanation of the above angles is given in Figure 1.

(b) With adjustable seats adjusted as described in S15.1.2.2(c), each lower anchorage bar shall be located so that a vertical transverse plane intersecting the center of the bar is:

(1) Not more than 70 mm behind point Z of the CRF, measured parallel to the bottom surface of the CRF and to the center of the bar, with the CRF rear surface against the seat back; and

(2) Not less than 120 mm behind the vehicle seating reference point, measured horizontally and to the center of the bar. (**Note:** To facilitate installation of the CRF in a vehicle seat, the CRF may be constructed of smaller

separable parts and assembled in the vehicle seat. Alternatively, vehicle components may be removed to allow access.)

(c) Adjustable seats are adjusted as recommended by the vehicle manufacturer for use with child restraint systems.

S15.2 *Static Strength Requirements.*

S15.2.1 The strength of the anchorages shall be determined using the procedure of S15.3 to apply forces to the SFAD 2, installed in the vehicle seating position and engaged with the anchorages. The vehicle seat shall be installed in the vehicle, or in sufficient parts of the vehicle so as to be representative of the strength and rigidity of the vehicle structure. If the seat is adjustable, it shall be placed in the position recommended by the vehicle manufacturer for use with child restraint systems. If no adjusted position is recommended, the seat shall be placed in any position, at the agency's option.

S15.2.2 Horizontal excursion of point X during application of the 8 kN and 5 kN forces shall be not more than 125 mm, after preloading the device.

S15.3 *Forces and directions.*

S15.3.1 A rearward force of 135 N ± 15 N shall be applied to the center of the lower front crossbar of SFAD 2 to press the device against the seat back as the fore-aft position of the rearward extensions of the SFAD is adjusted to remove any slack or tension. Forces shall be applied to SFAD 2 in forward and lateral directions according to the following table.

TABLE TO S15.3.1.—DIRECTIONS OF TEST FORCES

Forward	0° ± 5°	8 kN ± 0.25 kN
Lateral	75° ± 5° (to both sides of straight forward)	5 kN ± 0.25 kN

S15.3.2 Forces in the forward direction shall be applied with an initial force application angle of 10 ± 5 degrees above the horizontal. Lateral forces shall be applied horizontally (0° ± 5°). A pre-load force of 500 N ± 25 N shall be applied at the prescribed loading point (point X) in Figure 17. The force shall be increased to 8 kN ± 0.25 kN for forward tests, or to 5 kN ± 0.25 kN for lateral tests. Full application of the force shall be achieved within a time period of 2 seconds or less. The force shall be maintained for a period of 0.25 seconds ± 0.05 seconds.

S15.3.3 If anchorages for more than one child restraint anchorage system are installed in the vehicle seat assembly and not directly into the vehicle structure, the forces described in S15.3 shall be applied simultaneously to SFADs engaged with the anchorages at each seating position.

S15.4 *Marking and conspicuity of the lower anchorages.* At least one anchorage bar (when deployed for use), one guidance fixture, or one seat marking feature shall be readily visible to the person installing a CRF. Storable anchorages shall be provided with a telltale or label that is visible when the anchorage is stored.

BILLING CODE 4910–59–P

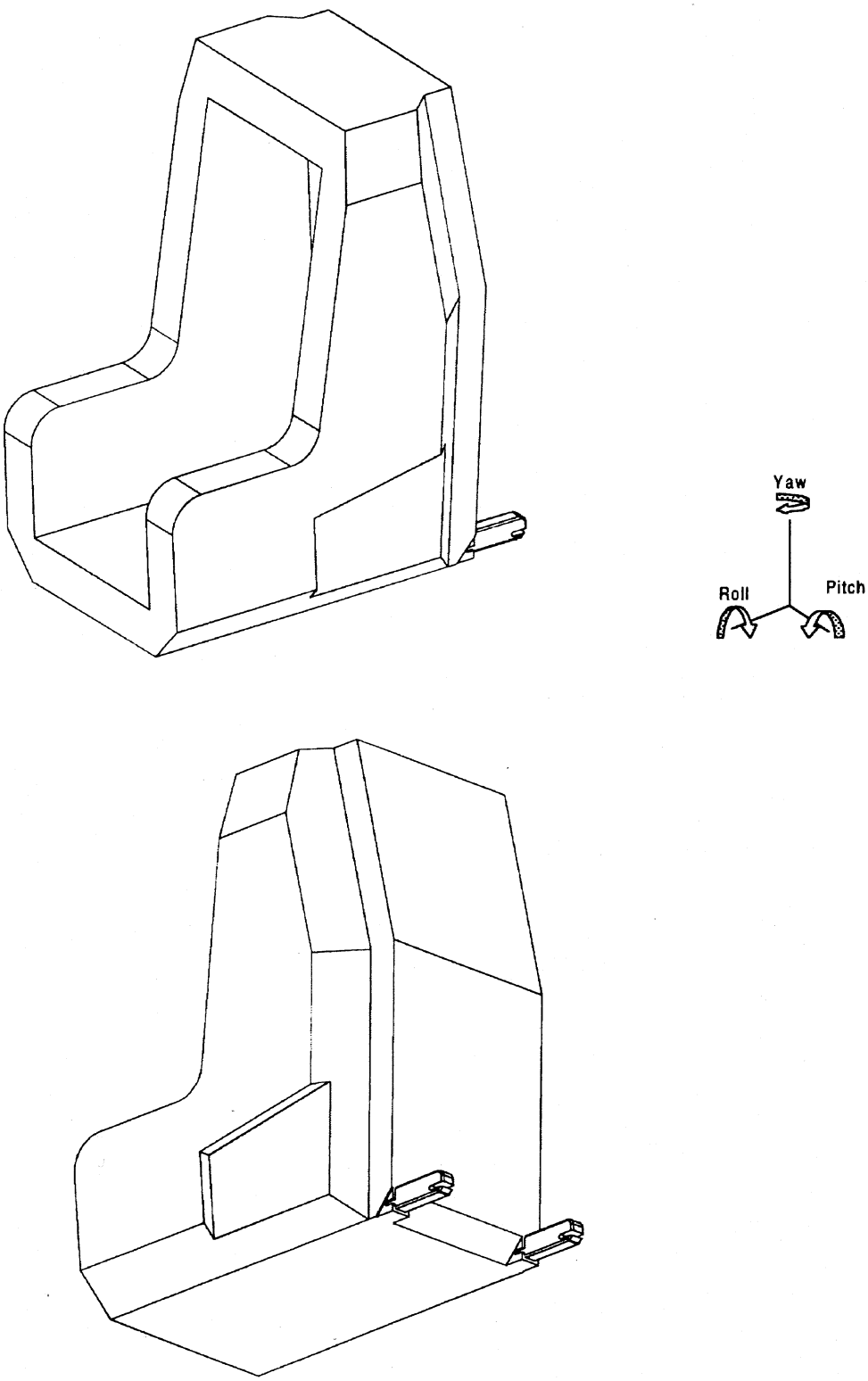

Figure 1 – Child restraint fixture (CRF)

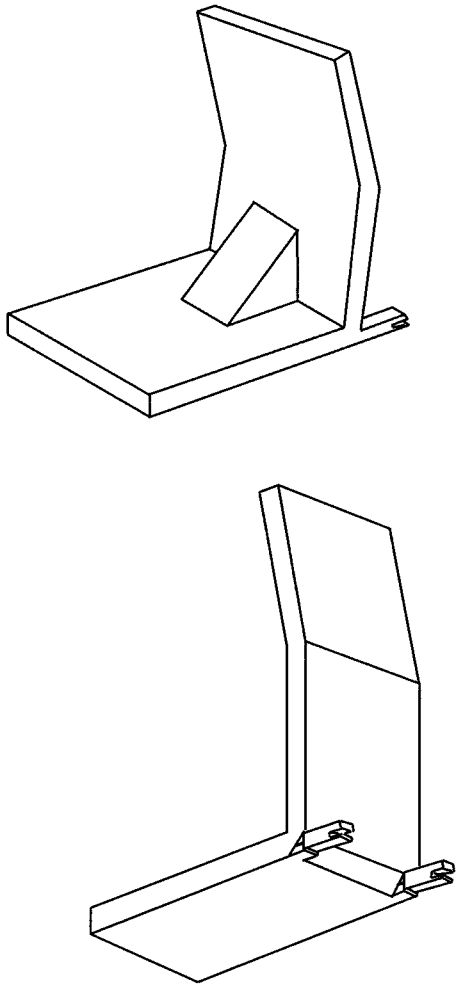

Figure 1A - Child Restraint Fixture (CRF) with Side and Top Frames Removed

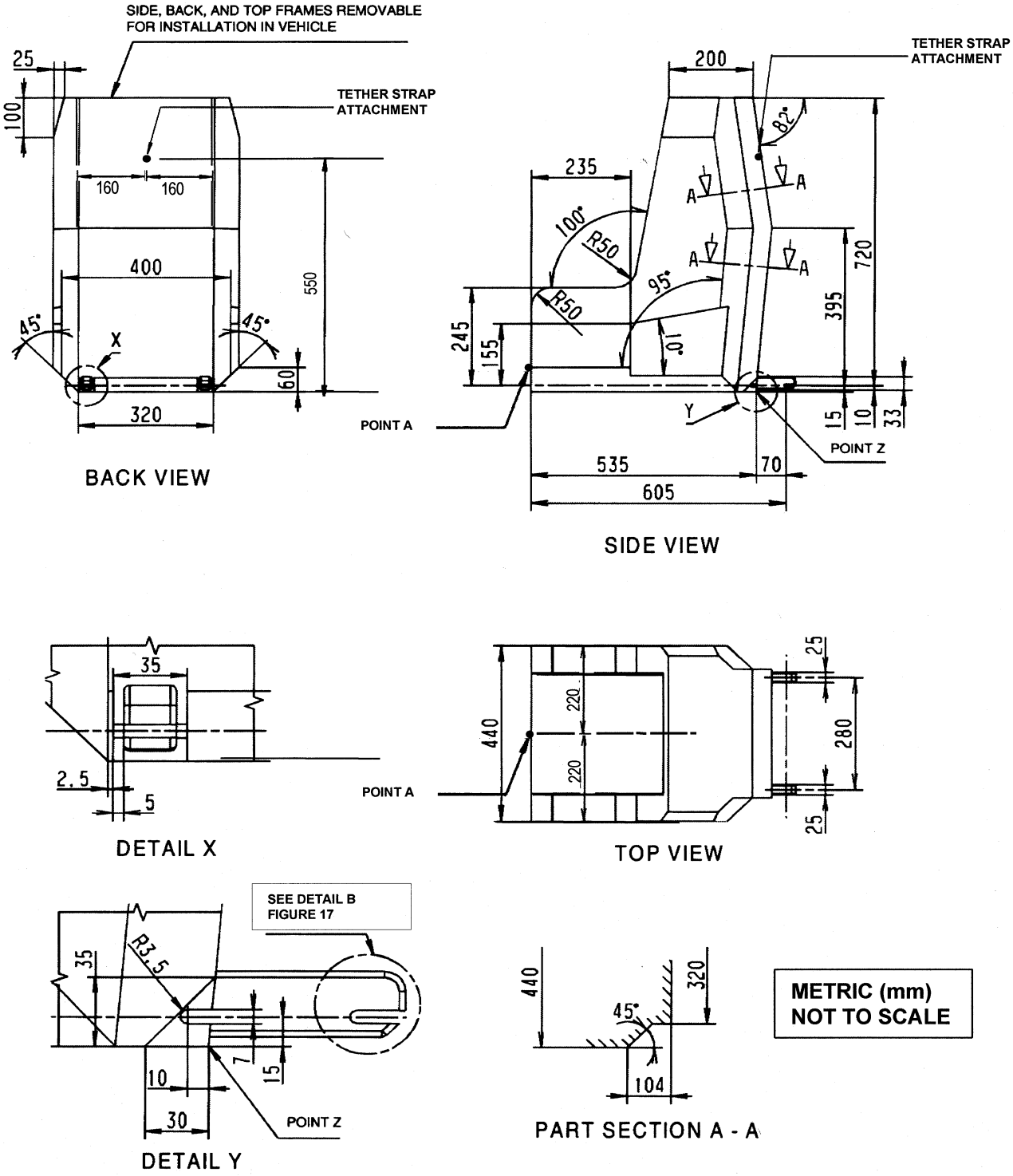

Note:

1. Mass of CRF 5 to 8 kg

Figure 2 - Child restraint fixture (CRF)

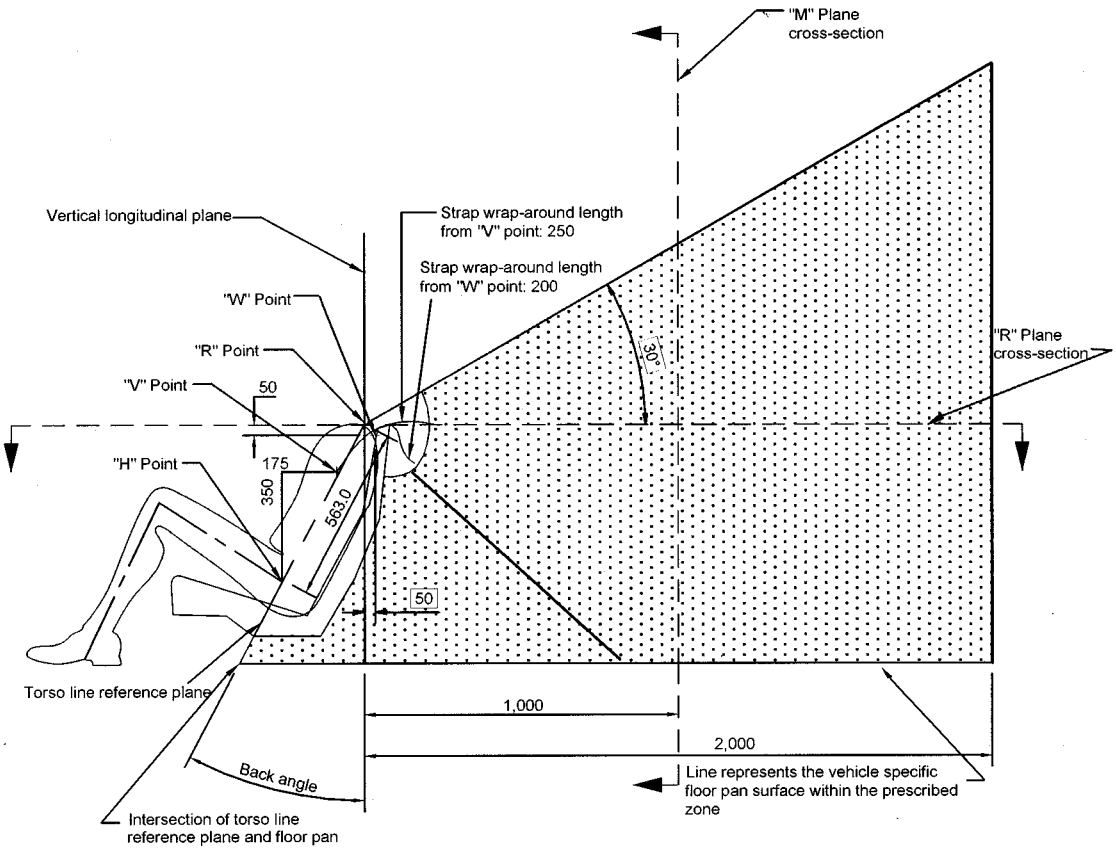

Notes

1. Dimensions in mm, except where otherwise indicated
2. Portion of user-ready tether anchorage that is designed to bind with the tether strap hook to be located within shaded zone
3. Drawing not to scale
4. "R" Point: Shoulder reference point
5. "V" Point: V-reference point, 350 mm vertically above and 175 mm horizontally back from H-point
6. "W" Point: W-reference point, 50 mm vertically below and 50 mm horizontally back from "R" Point
7. "M" Plane: M-reference plane, 1 000 mm horizontally back from "R" Point

Figure 3 -- Side View, User-ready Tether Anchorage Location

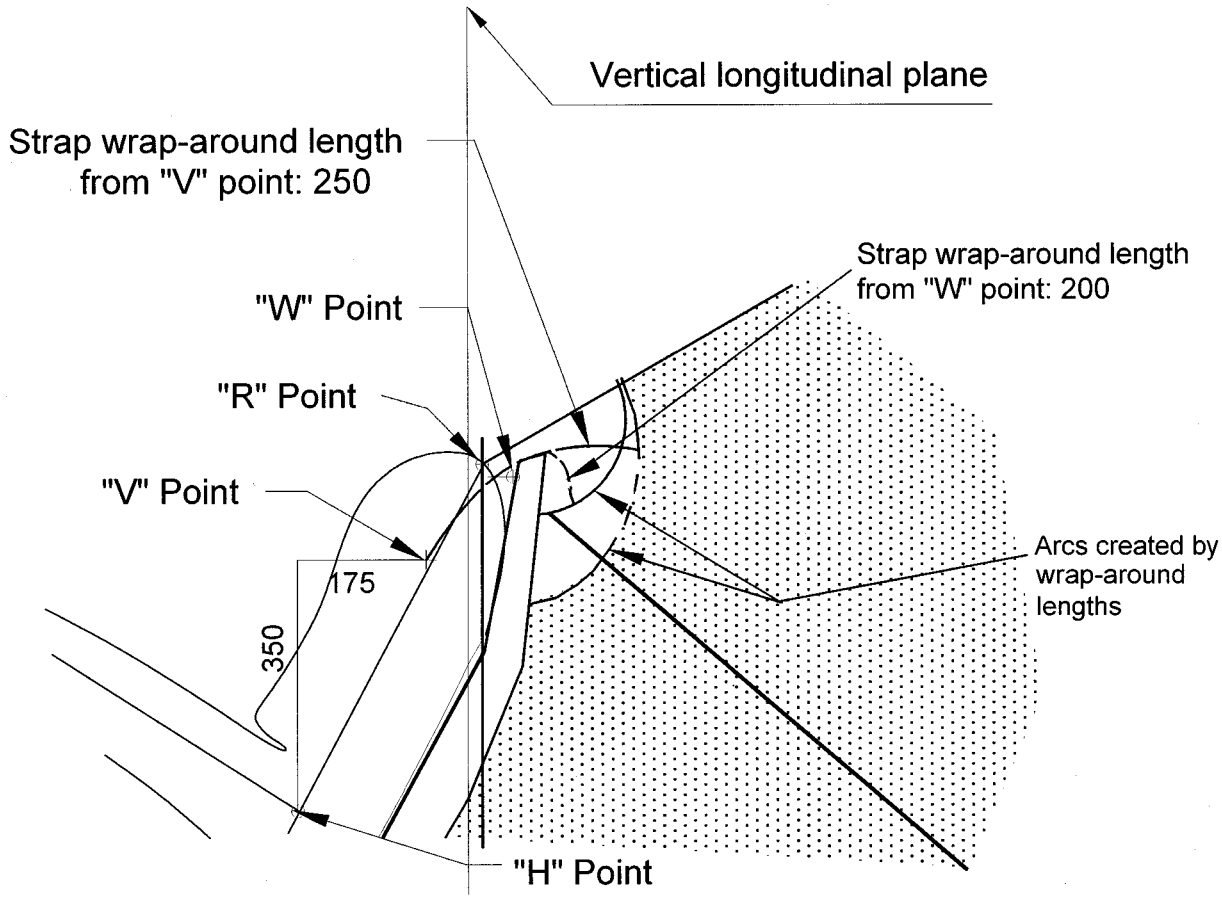

Notes

1. Dimensions in mm, except where otherwise indicated
2. Portion of user-ready tether anchorage that is designed to bind with the tether strap hook to be located within shaded zone
3. Drawing not to scale
4. "R" Point: Shoulder reference point
5. "V" Point: V-reference point, 350 mm vertically above and 175 mm horizontally back from H-point
6. "W" Point: W-reference point, 50 mm vertically below and 50 mm horizontally back from "R" Point
7. "M" Plane: M-reference plane, 1 000 mm horizontally back from "R" Point

Figure 4 -- Enlarged Side View of Strap Wrap-around Area, User-ready Tether Anchorage Location

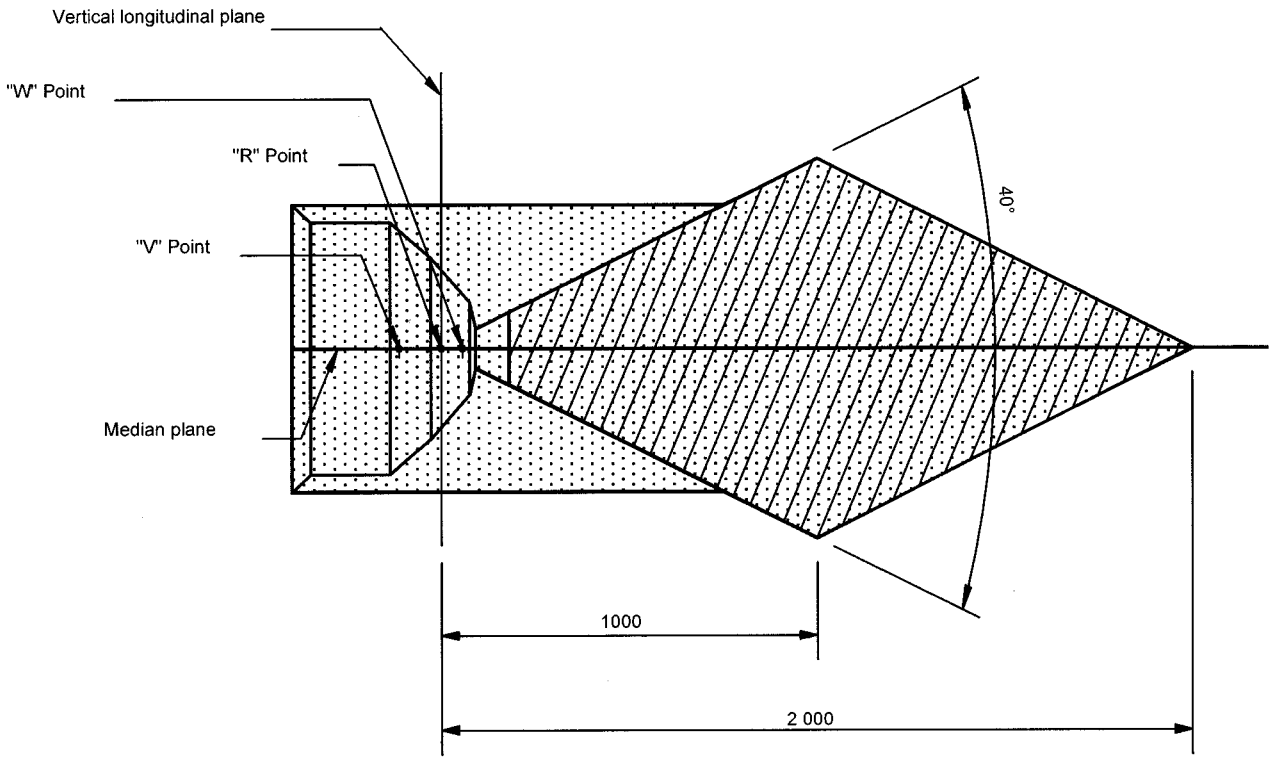

1. Dimensions in mm, except where otherwise indicated
2. Portion of user-ready tether anchorage that is designed to bind with the tether strap hook to be located within shaded zone
3. Drawing not to scale
4. "R" Point: Shoulder reference point
5. "V" Point: V-reference point, 350 mm vertically above and 175 mm horizontally back from H-point.
6. "W" Point: W-reference point, 50 mm vertically below and 50 mm horizontally back from "R" Point

Figure 5. Plan View (R-plane Cross Section), User-ready Tether Anchorage Location

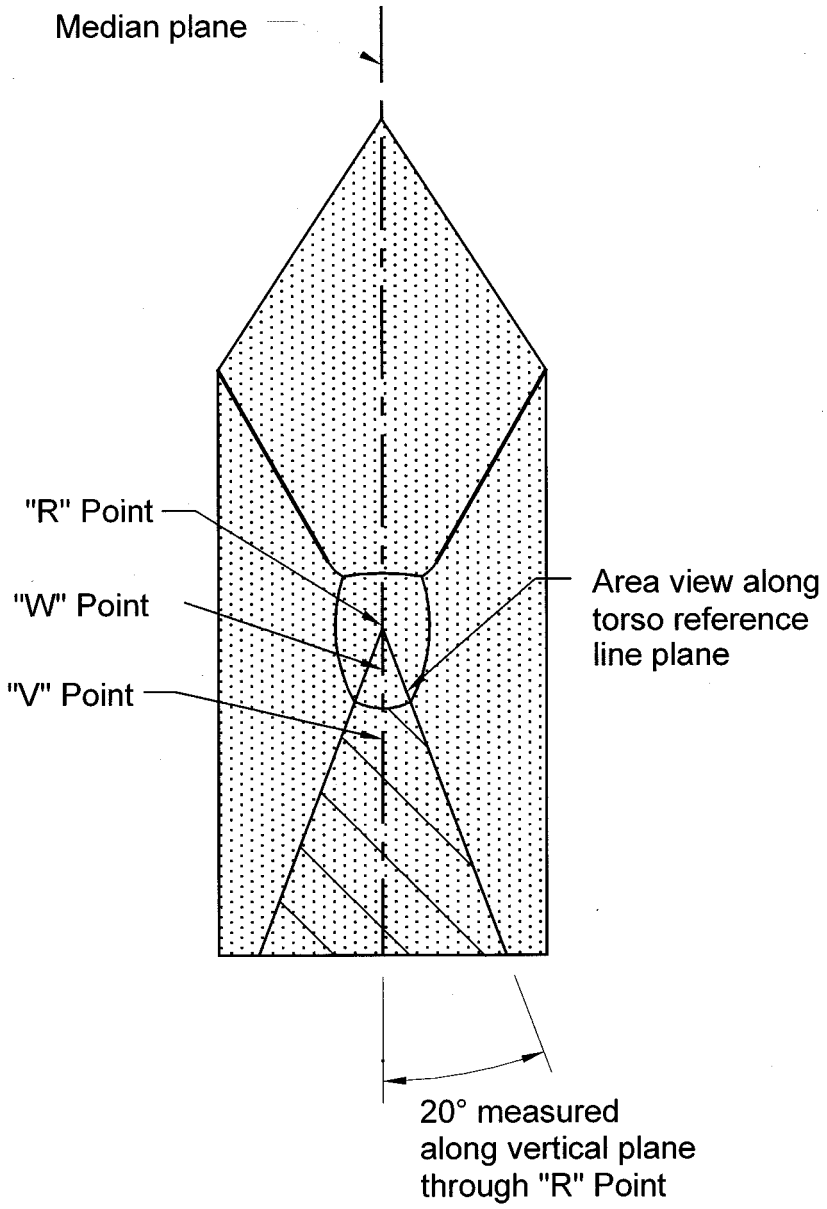

Notes

1. Portion of user-ready tether anchorage that is designed to bind with the tether strap hook to be located within shaded zone
2. Drawing not to scale
3. “R” Point: Shoulder reference point
4. “V” Point: V-reference point, 350 mm vertically above and 175 mm horizontally back from H-point
5. “W” Point: W-reference point, 50 mm vertically below and 50 mm horizontally back from “R” Point

Figure 6 -- Front View, User-ready Tether Anchorage Location

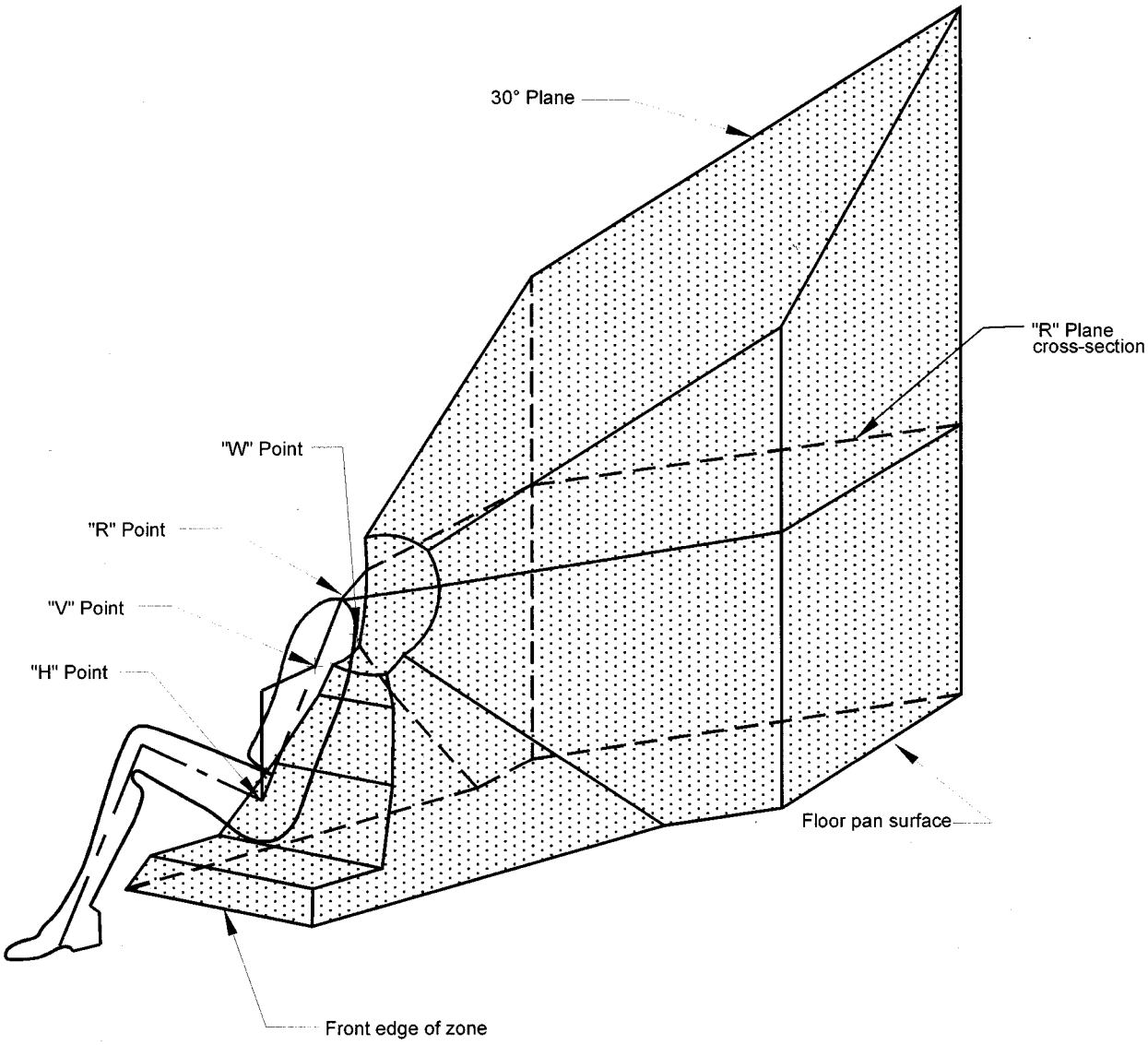

Notes

1. Portion of user-ready tether anchorage that is designed to bind with the tether strap hook to be located within shaded zone
2. Drawing not to scale
3. "R" Point: Shoulder reference point
4. "V" Point: V-reference point, 350 mm vertically above and 175 mm horizontally back from H-point
5. "W" Point: W-reference point, 50 mm vertically below and 50 mm horizontally back from "R" Point

Figure 7 -- Three-dimensional Schematic View of User-ready Tether Anchorage Location

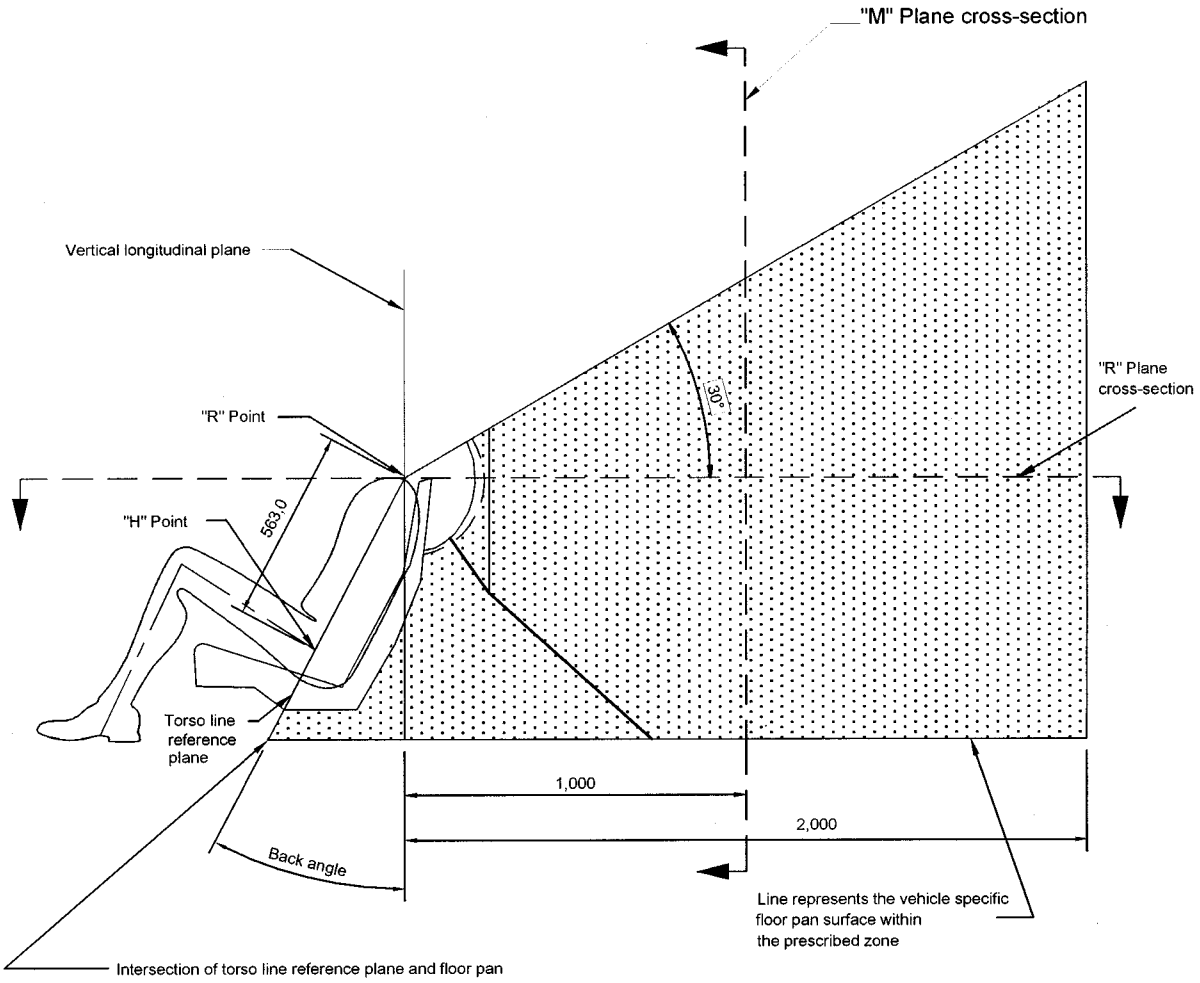

Notes

1. Dimensions in mm, except where otherwise indicated
2. Portion of user-ready tether anchorage that is designed to bind with the tether strap hook to be located within shaded zone
3. Drawing not to scale
4. "R" Point: Shoulder reference point
5. "M" Plane: M-reference plane, 1 000 mm horizontally back from "R" Point

Figure 8 -- Side View, User-ready Tether Anchorage Optional Location for Passenger Cars and Multipurpose Passenger Vehicles until September 1, 2004

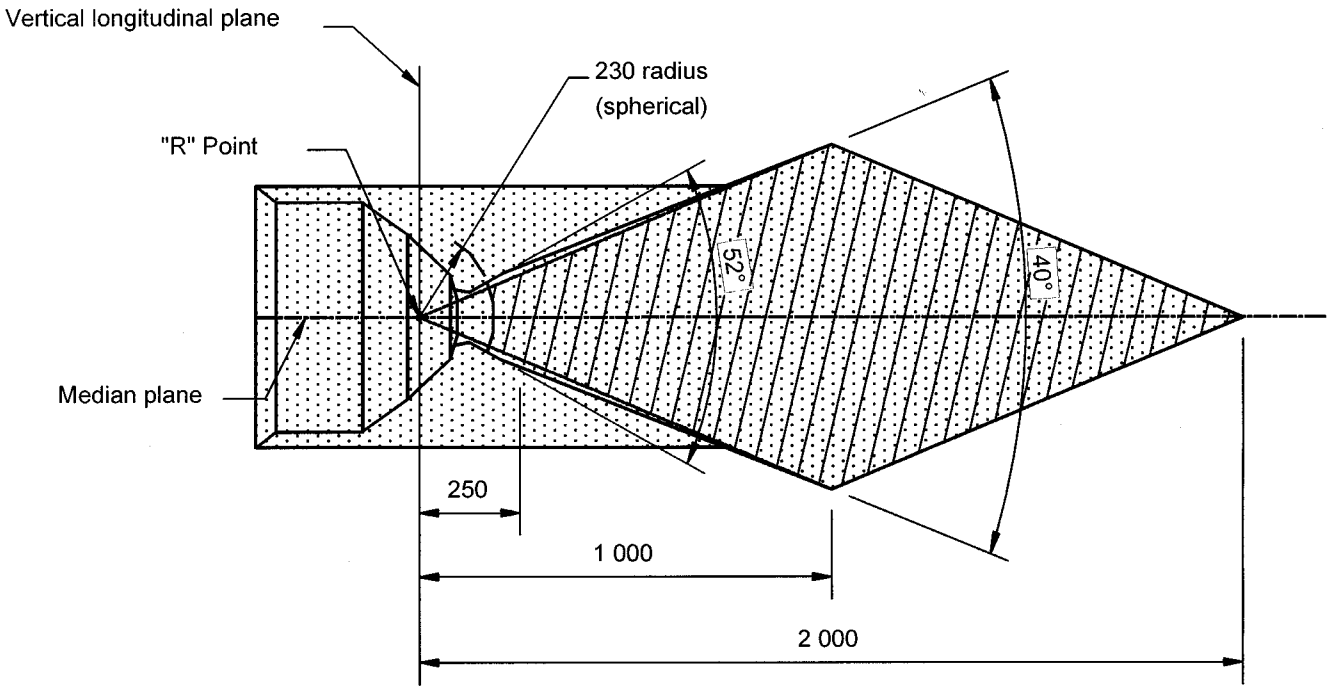

Notes

1. Dimensions in mm, except where otherwise indicated
2. Portion of user-ready tether anchorage that is designed to bind with the tether strap hook to be located within shaded zone
3. Drawing not to scale
4. “R” Point: Shoulder reference point

Figure 9 -- Plan View (R-point Level), User-ready Tether Anchorage Optional Location for Passenger Cars and Multipurpose Passenger Vehicles until September 1, 2004

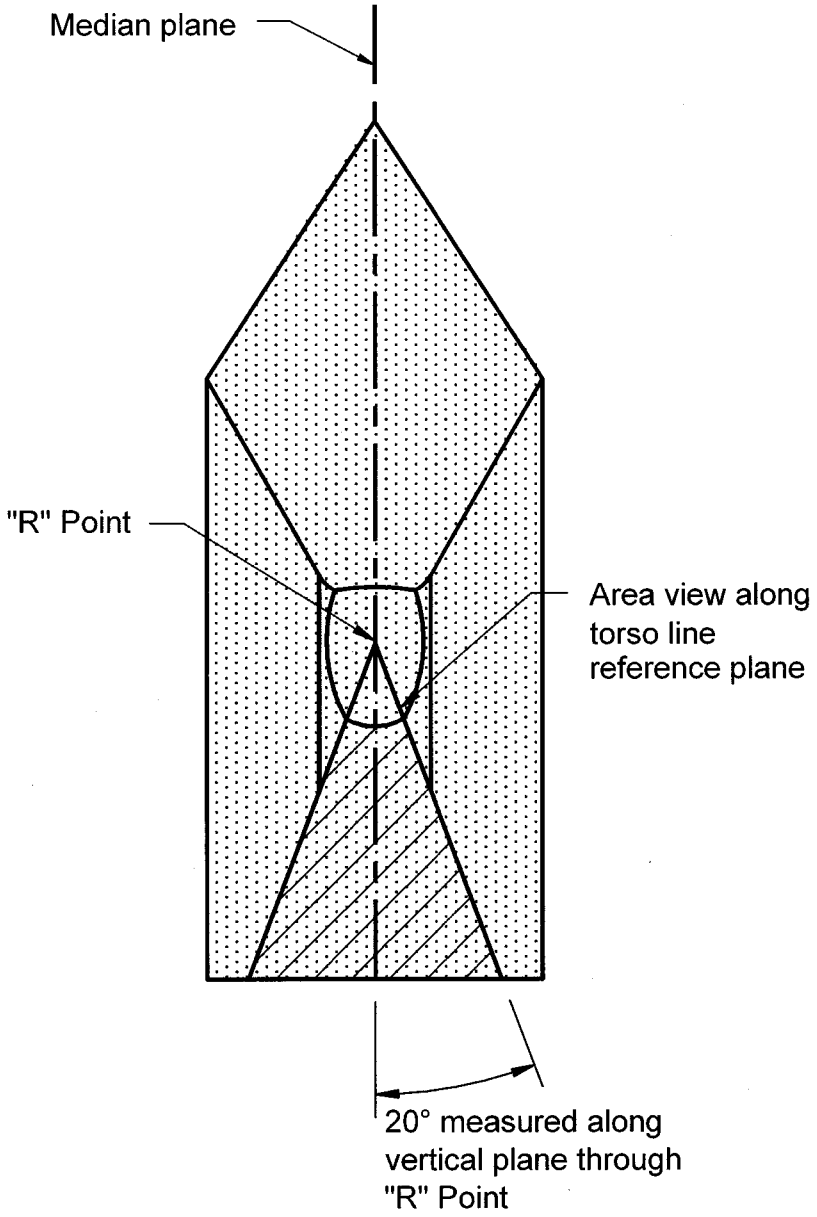

Notes

1. Portion of user-ready tether anchorage that is designed to bind with the tether strap hook to be located within shaded zone
2. Drawing not to scale
3. "R" Point: Shoulder reference point

Figure 10 -- Front View, User-ready Tether Anchorage Optional Location for Passenger Cars and Multipurpose Passenger Vehicles until September 1, 2004

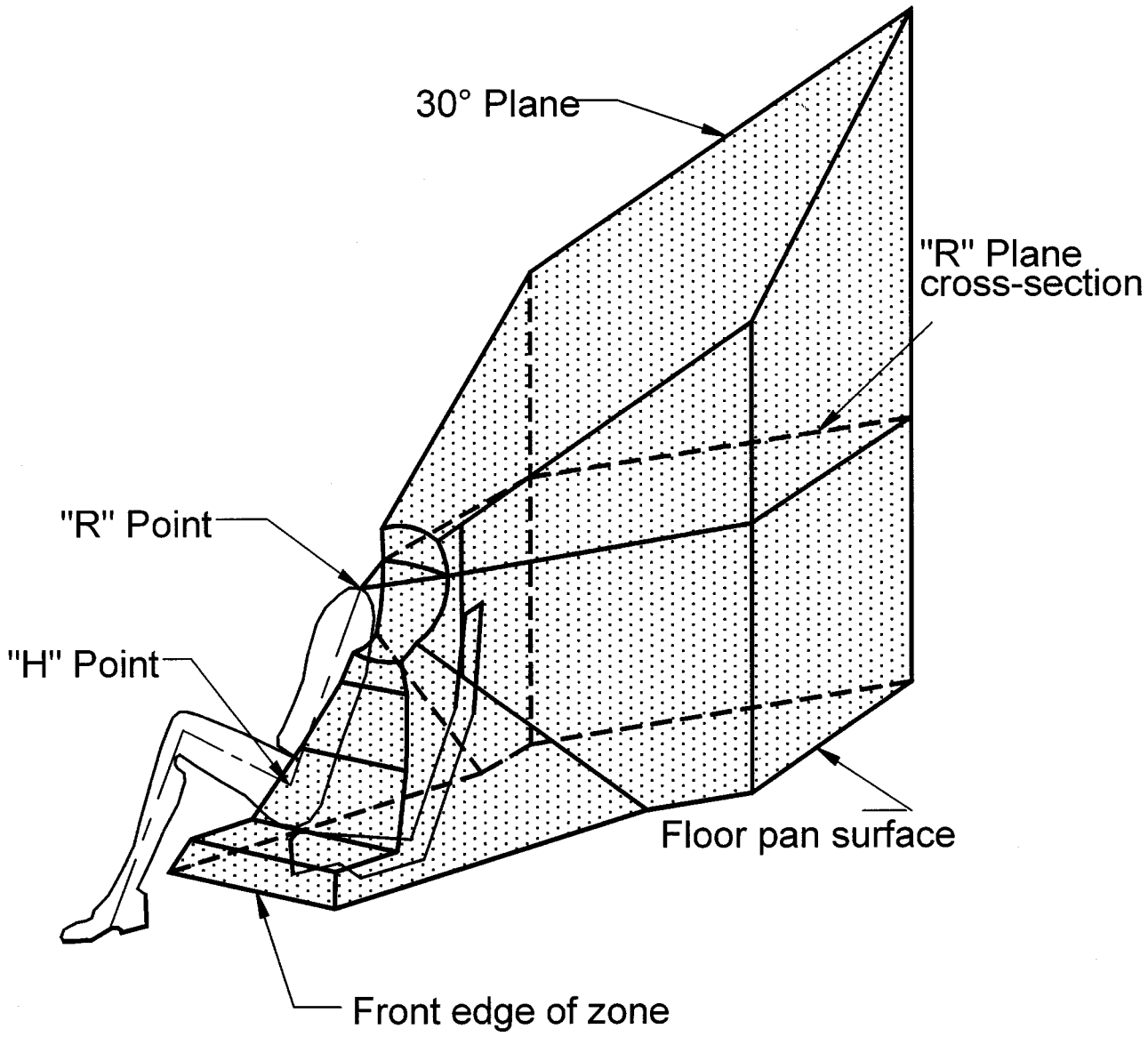

Notes

1. Portion of user-ready tether anchorage that is designed to bind with the tether strap hook to be located within shaded zone
2. Drawing not to scale
3. "R" Point: Shoulder reference point

Figure 11 -- Three-dimensional Schematic View of User-ready Tether Anchorage Optional Location for Passenger Cars and Multipurpose Passenger Vehicles until September 1, 2004

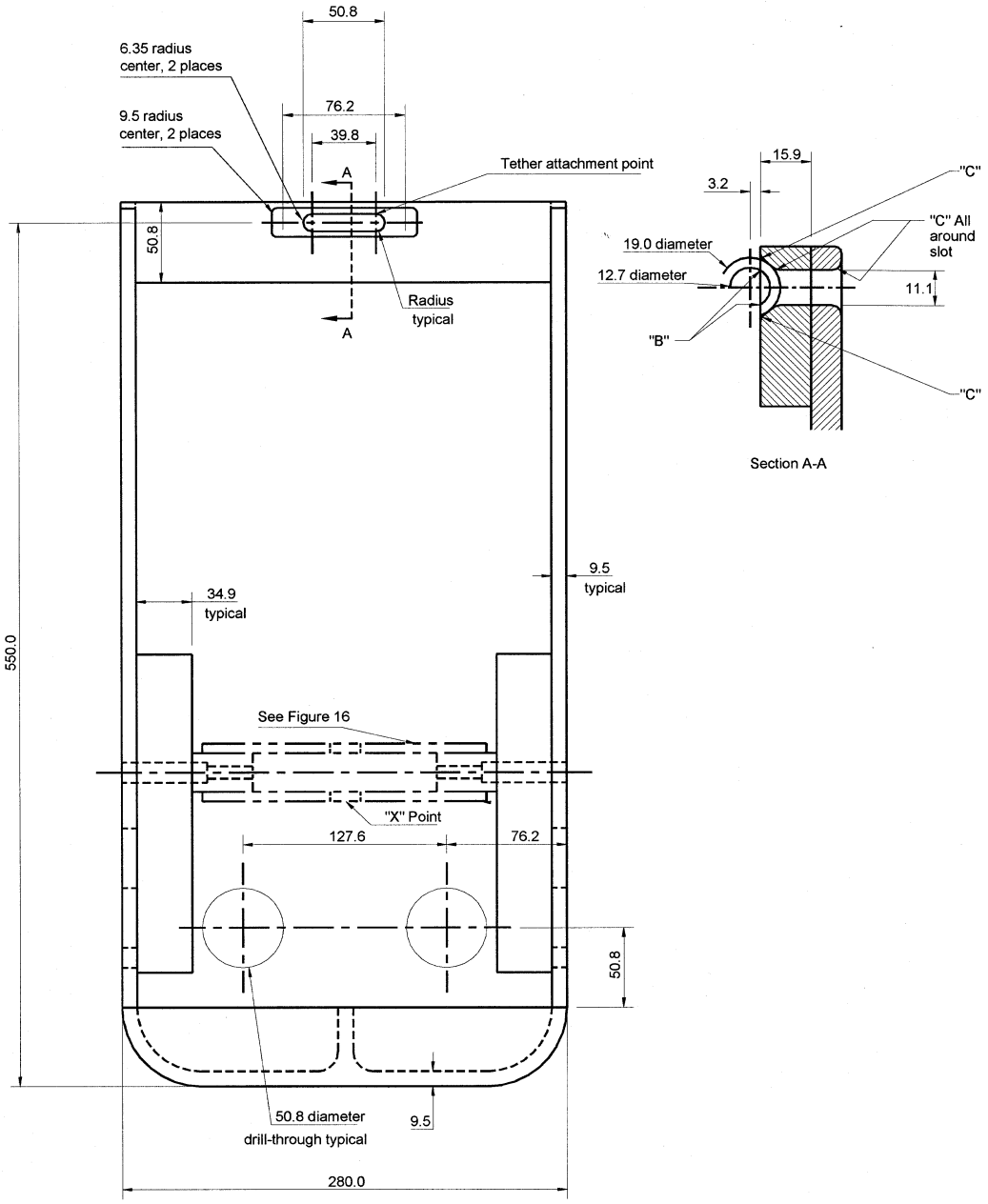

Notes

1. Material: 6061-T6-910 Aluminum
2. Dimensions in mm, except where otherwise indicated
3. Drawing not to scale
4. “B” = approximately 0.8 mm
5. “C” = approximately 3.2 mm

Figure 15 -- Front View, Static Force Application Device 1 (SFAD 1)

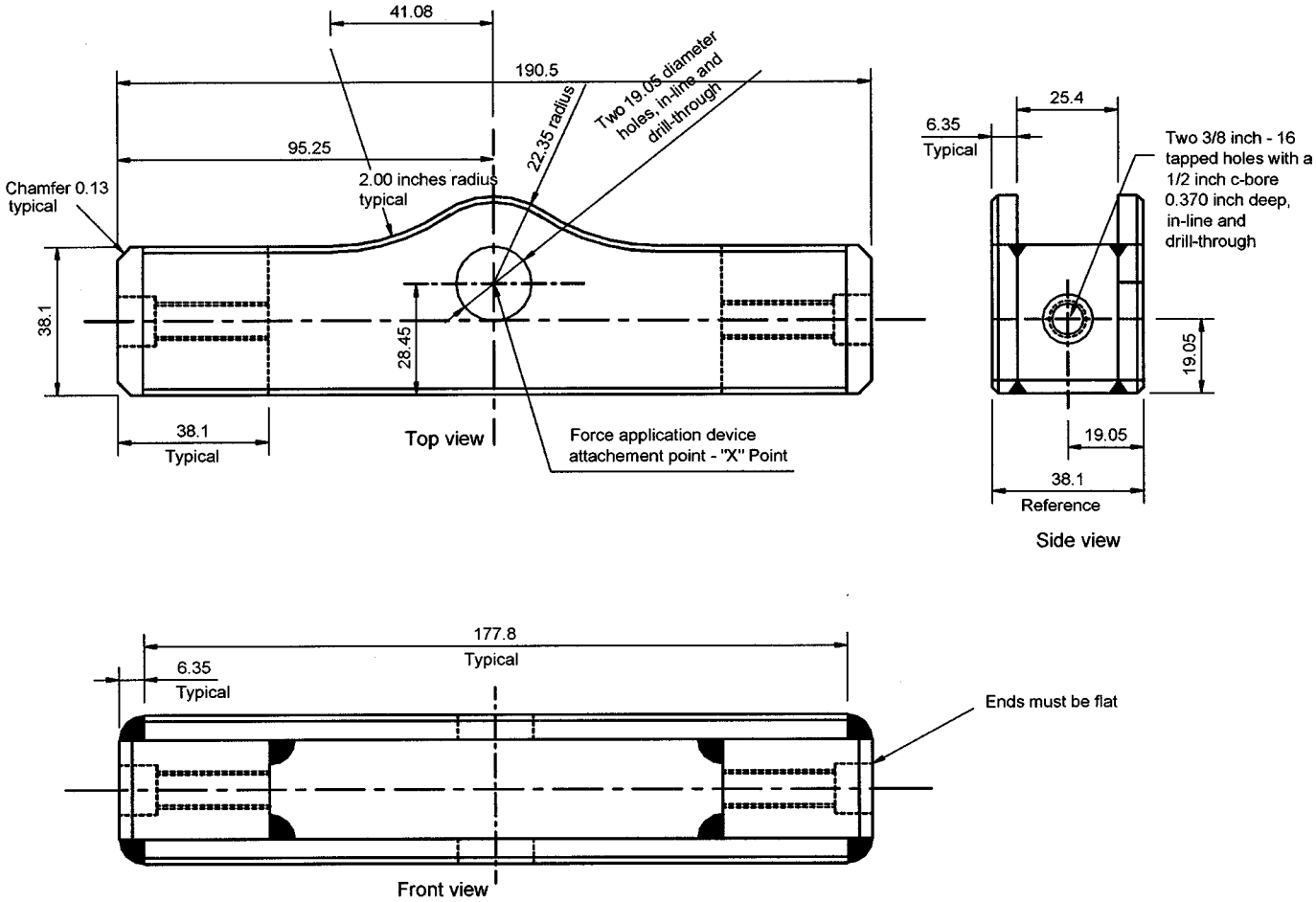

Notes

1. Material: Steel
2. Dimensions in mm, except where otherwise indicated
3. Drawing not to scale
4. Break all outside corners approximately 1.5 mm
5. Surfaces and edges are not to be machined unless otherwise specified for tolerance.
6. Saw-cut or stock size material whenever possible.
7. Construction to be securely welded.

Figure 16 -- Cross Bar, Static Force Application Device 1 (SFAD 1)

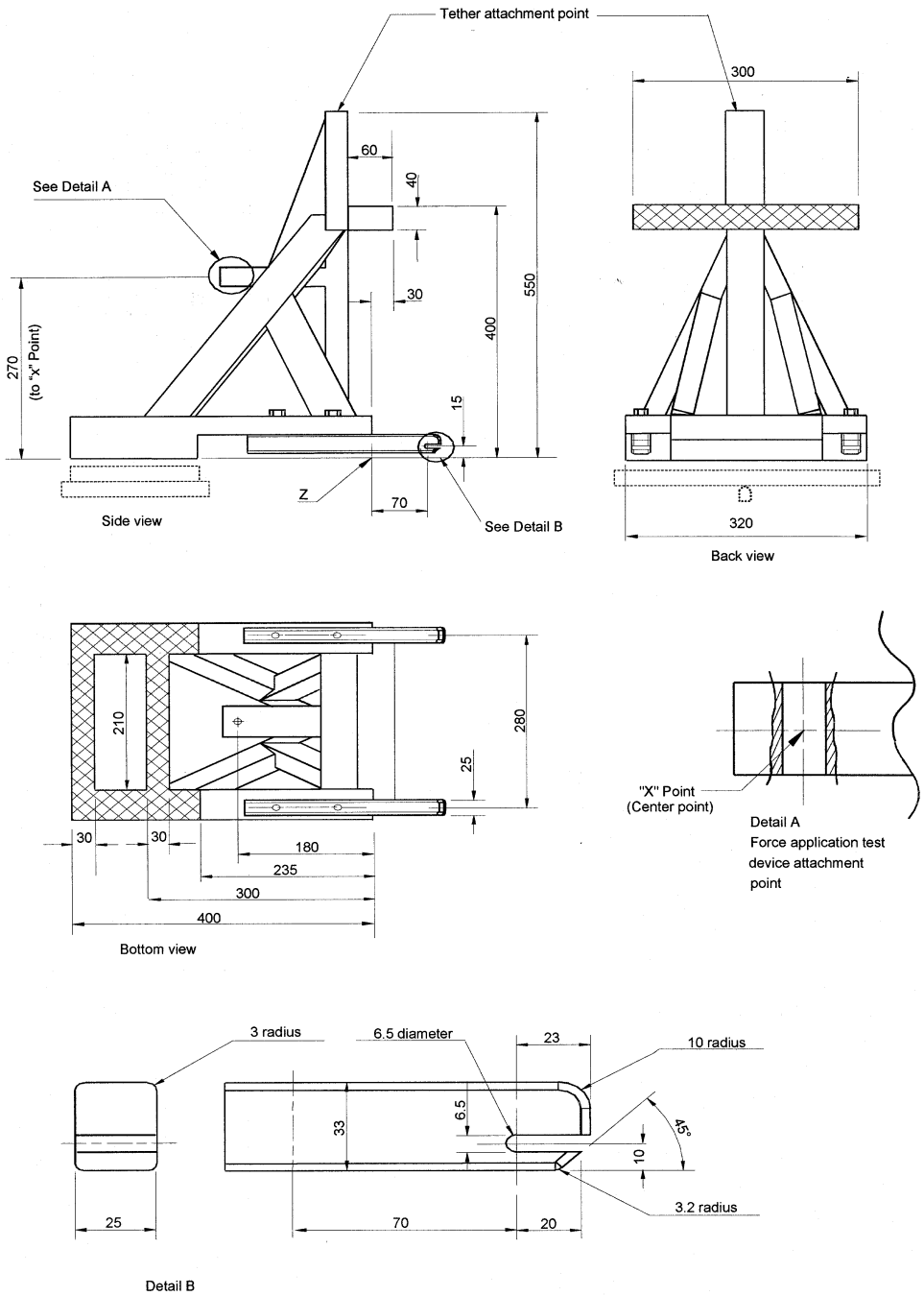

Notes:

1. Drawing not to scale
2. Dimensions in mm, except where otherwise indicated
3. Device stiffness satisfied when using a securely welded construction consisting of rectangular 3 mm steel tubing and 6 mm thick load application plate
4. If construction not as per note 3, stiffness of device is satisfied if movement of point "X" is not more than 2 mm in any direction when forces are applied as specified in S15.2.1, with device attached to rigid anchorage bars and the front cross member supported by a rigid bar that is held at the center by a longitudinal pivot 25 mm below the SFAD2 base (as shown in broken lines) to allow bending and twisting of the base of the device. Any deformation of the anchorage bars to be excluded from the measurements of the movement of point "X".

Figure 17- Side, Back and Bottom Views, ISO 13216-1 Static Force Application Device 2 (SFAD 2)

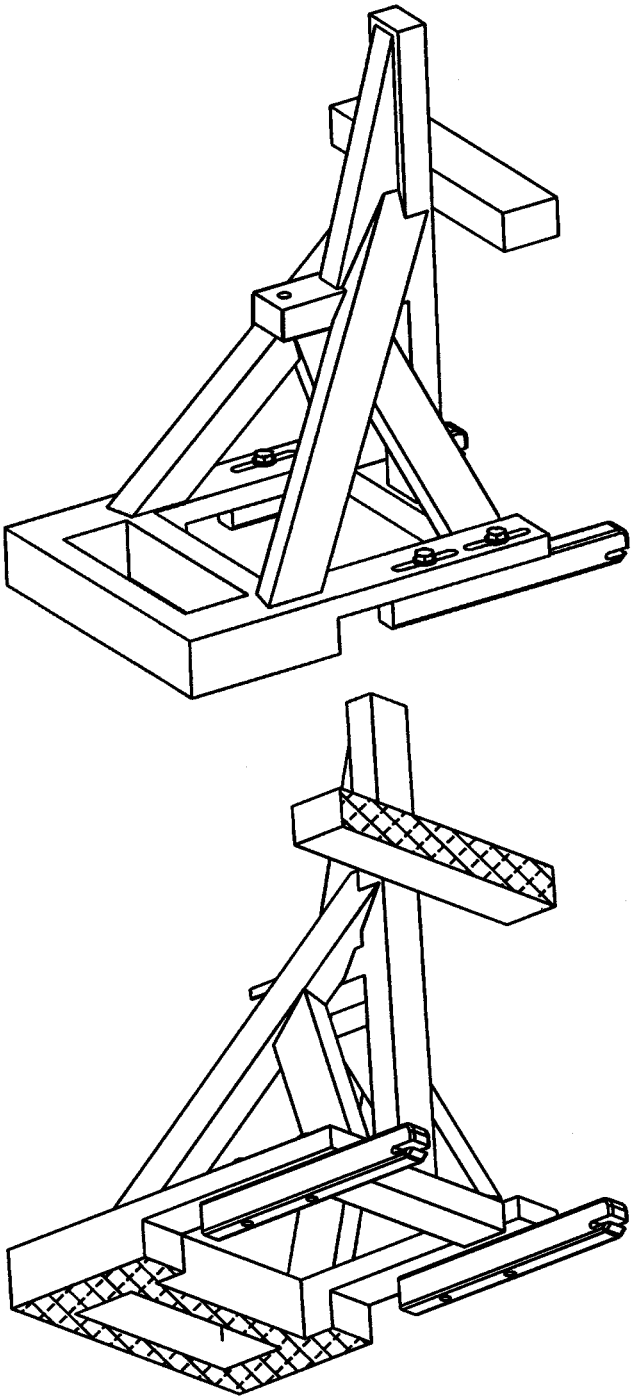

Figure 18 -- Three-dimensional Schematic Views of the ISO 13216-1 Static Force Application Device 2 (SFAD 2)

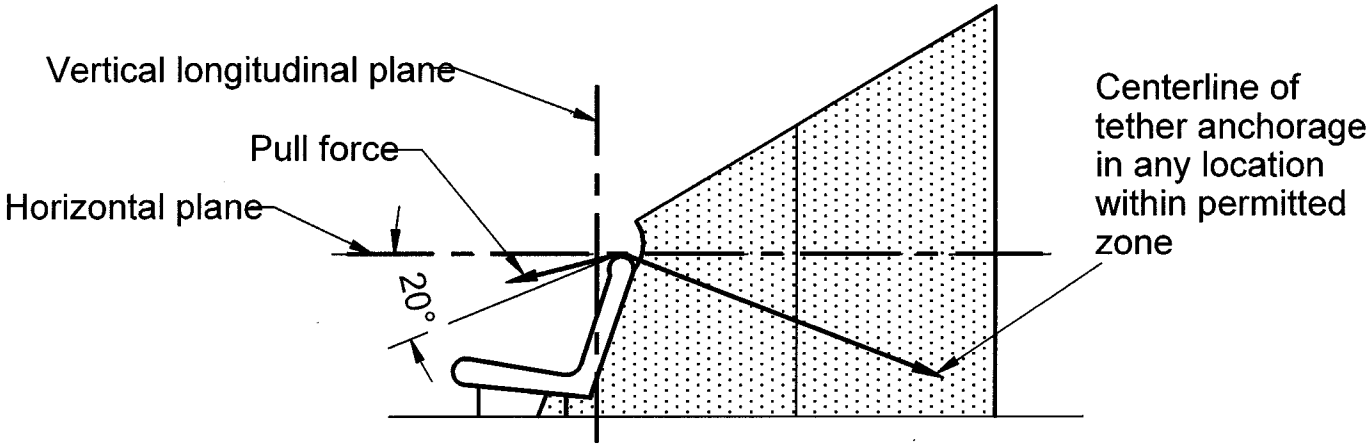

Figure 19 – Side View, Optional Tether Anchorage Test for Passenger Cars until September 1, 2004

Issued on August 18, 1999.

Ricardo Martinez,

Administrator.

[FR Doc. 99–22174 Filed 8–25–99; 3:38 pm]

BILLING CODE 4910–59–C