DEPARTMENT OF TRANSPORTATION

Federal Aviation Administration

14 CFR Part 39

[Docket No. 99–NM–65–AD]

RIN 2120–AA64

Airworthiness Directives; Boeing Model 747 Series Airplanes Equipped With Pratt & Whitney JT9D–70 Series Engines

AGENCY: Federal Aviation Administration, DOT.

ACTION: Notice of proposed rulemaking (NPRM).

SUMMARY: This document proposes the adoption of a new airworthiness directive (AD) that is applicable to certain Boeing Model 747 series airplanes. This proposal would require inspections, tests, and certain modifications of the thrust reverser control and indication system and wiring on each engine, and corrective action, if necessary.

This proposal also would require installation of a terminating modification, and repetitive functional tests of that installation to detect discrepancies, and repair, if necessary. This proposal is prompted by the results of a safety review, which revealed that in-flight deployment of a thrust reverser could result in significant reduction in airplane controllability. The actions specified by the proposed AD are intended to ensure the integrity of the fail-safe features of the thrust reverser system by preventing possible failure modes, which could result in inadvertent deployment of a thrust reverser during flight, and consequent reduced controllability of the airplane.

DATES: Comments must be received by March 20, 2000.

ADDRESSES: Submit comments in triplicate to the Federal Aviation Administration (FAA), Transport Airplane Directorate, ANM–114, Attention: Rules Docket No. 99–NM–65–AD, 1601 Lind Avenue, SW., Renton, Washington 98055–4056. Comments may be inspected at this location between 9:00 a.m. and 3:00 p.m., Monday through Friday, except Federal holidays.

The service information referenced in the proposed rule may be obtained from Boeing Commercial Airplane Group, P.O. Box 3707, Seattle, Washington 98124–2207. This information may be examined at the FAA, Transport Airplane Directorate, 1601 Lind Avenue, SW., Renton, Washington.

FOR FURTHER INFORMATION CONTACT: Larry Reising, Aerospace Engineer, Propulsion Branch, ANM–140S, FAA, Transport Airplane Directorate, Seattle Aircraft Certification Office, 1601 Lind Avenue, SW., Renton, Washington 98055–4056; telephone (425) 227–2683; fax (425) 227–1181.

SUPPLEMENTARY INFORMATION:

Comments Invited

Interested persons are invited to participate in the making of the proposed rule by submitting such written data, views, or arguments as they may desire. Communications shall identify the Rules Docket number and be submitted in triplicate to the address specified above. All communications received on or before the closing date for comments, specified above, will be considered before taking action on the proposed rule. The proposals contained in this notice may be changed in light of the comments received.

Comments are specifically invited on the overall regulatory, economic, environmental, and energy aspects of the proposed rule. All comments submitted will be available, both before and after the closing date for comments, in the Rules Docket for examination by interested persons. A report summarizing each FAA-public contact concerned with the substance of this proposal will be filed in the Rules Docket.

Commenters wishing the FAA to acknowledge receipt of their comments submitted in response to this notice must submit a self-addressed, stamped postcard on which the following statement is made: ''Comments to Docket Number 99–NM–65–AD.'' The postcard will be date stamped and returned to the commenter.

Availability of NPRMs

Any person may obtain a copy of this NPRM by submitting a request to the FAA, Transport Airplane Directorate, ANM–114, Attention: Rules Docket No. 99–NM–65–AD, 1601 Lind Avenue, SW., Renton, Washington 98055–4056.

Discussion

On May 26, 1991, a Boeing Model 767–300ER series airplane was involved in an accident as a result of an uncommanded in-flight deployment of a thrust reverser. Following that accident, a study was conducted to evaluate the potential effects of an uncommanded thrust reverser deployment throughout the flight regime of the Boeing Model 747 series airplane. The study included a re-evaluation of the thrust reverser control system fault analysis and airplane controllability. The results of the evaluation indicated that, in the event of thrust reverser deployment during high-speed climb using high engine power, these airplanes also could experience control problems. This condition, if not corrected, could result in possible failure modes in the thrust reverser control system, inadvertent deployment of a thrust reverser during flight, and consequent reduced controllability of the airplane.

The FAA has prioritized the issuance of AD's for corrective actions for the thrust reverser system on Boeing airplane models following the 1991 accident. Based on service experience, analyses, and flight simulator studies, it was determined that an in-flight deployment of a thrust reverser has more effect on controllability of twin-engine airplane models than of Model 747 series airplanes, which have four engines. For this reason, the highest priority was given to rulemaking that required corrective actions for the twin-engine airplane models. AD's correcting the same type of unsafe condition addressed by this AD have been previously issued for specific airplanes within the Boeing Model 737, 757 and 767 series.

Service experience has shown that in-flight thrust reverser deployments have occurred on Model 747 airplanes during certain flight conditions with no significant airplane controllability problems being reported. However, the manufacturer has been unable to establish that acceptable airplane controllability would be achieved following these deployments throughout the operating envelope of the airplane. Additionally, safety analyses performed by the manufacturer and reviewed by the FAA, has been unable to establish that the risks for uncommanded thrust reverser deployment during critical flight conditions is acceptably low.

Explanation of Relevant Service Information

The FAA has reviewed and approved the following Boeing Service Bulletins:

• 747–78A2159, dated May 18, 1995, which describes procedures for repetitive inspections and tests of the thrust reverser control and indication system to detect discrepancies, and corrective action, if necessary. The corrective action includes, among other things, repair or replacement of any discrepant parts with new parts.

• 747–78–2153, Revision 1, dated November 27, 1996, which describes procedures for installation of an additional locking system on the thrust reversers. This service bulletin references the following service bulletins:

1. Boeing Service Bulletin 747–78–2135, dated August 31, 1995, which describes procedures for the installation of provisional wiring for an additional thrust reverser locking device.

2. Boeing Service Bulletin 747–78A2149, Revision 1, dated May 9, 1996, and Revision 2, dated August 29, 1996, which describe procedures for inspection of the thrust reverser control system wiring to detect damaged wires; modification of certain wiring, and an operational test of the thrust reverser. This service bulletin references Boeing Standard Wiring Practices Manual, which describes procedures for repair or replacement of certain wire bundles, if necessary.

3. Rohr Service Bulletin TBC–CNS 78–33, Revision 1, dated August 20, 1996, which describes additional procedures for installation of an additional locking system on the thrust reversers.

Accomplishment of Boeing Service Bulletin 747–78–2153, Revision 1, requires prior or concurrent accomplishment of Boeing Service Bulletins 747–78–2135 and 747–78A2149, Revision 1 or Revision 2; and concurrent accomplishment of Rohr Service Bulletin TBC–CNS 78–33, Revision 1. Accomplishment of these actions would eliminate the need for certain repetitive inspections and tests.

The FAA also has reviewed and approved Rohr Service Bulletin TBC–CNS 78–32, Revision 1, dated August 20, 1996, which describes procedures for modification of the thrust reverser control system wiring concurrent with accomplishment of Boeing Service Bulletin 747–78A2149, Revision 1 or Revision 2.

The modification procedures described by Boeing Service Bulletins 747–78–2153, and 747–78–2135 were previously validated by the manufacturer, and the necessary changes have been incorporated into the latest revisions of the service bulletins. The FAA has determined that the procedures specified in Boeing Service Bulletins 747–78–2153, Revision 1, and 747–78–2135, as well as the other service bulletins referenced in this proposed AD, have been effectively validated and therefore proposes that this modification be required.

Explanation of Requirements of Proposed Rule

Since an unsafe condition has been identified that is likely to exist or develop on other products of this same type design, this proposed AD would require inspection of the thrust reverser control and indication system and wiring on each engine, and corrective action, if necessary; and eventual modification of the wiring. This proposal also would require installation of a terminating modification and repetitive functional tests of that installation to detect discrepancies, and repair, if necessary. The actions would be required to be accomplished in accordance with the service bulletins described previously, except as discussed below.

Repetitive functional tests to detect discrepancies of the actuation system lock on each thrust reverser would be required to be accomplished in accordance with the procedure included in Appendix 1 of this AD. Correction of any discrepancy detected would be required to be accomplished in accordance with the procedures described in the Boeing 747 Airplane Maintenance Manual.

Differences Between Service Bulletin and This Proposed AD

Operators should note that, although Boeing Service Bulletin 747–78–2153, Revision 1, does not recommend a specific compliance time for accomplishment of the actuation system lock installation, the FAA has determined that an unspecified compliance time would not address the identified unsafe condition in a timely manner. In developing an appropriate compliance time for this AD, the FAA considered not only the manufacturer's recommendation, but the degree of urgency associated with addressing the subject unsafe condition, the average utilization of the affected fleet, and the time necessary to perform the installation. In light of all of these factors, the FAA finds a 36-month compliance time for completing the required actions to be warranted, in that it represents an appropriate interval of time allowable for affected airplanes to continue to operate without compromising safety.

Operators also should note that, although the service bulletin does not specify repetitive functional testing of the actuation system lock installation following accomplishment of that installation, the FAA has determined that repetitive functional tests of the actuation system lock on each thrust reverser will support continued operational safety of thrust reversers with actuation system locks.

Cost Impact

There are approximately 7 Model 747 series airplanes of the affected design in the worldwide fleet. The FAA estimates that 6 airplanes of U.S. registry would be affected by this proposed AD.

It would take approximately 32 work hours (8 work hours per engine) per airplane, to accomplish the proposed thrust reverser inspection, modification, and test, described in 747–78A2149, Revision 1, or Revision 2, at an average labor rate of $60 per work hour. Based on these figures, the cost impact of the proposed AD on U.S. operators is estimated to be $11,520, or $1,920 per airplane.

It would take approximately 8 work hours (2 work hours per engine) per airplane, to accomplish the proposed 1,000-flight-hour inspections described in Boeing Service Bulletin 747–78A2159, at an average labor rate of $60 per work hour. Based on these figures, the cost impact of the inspection proposed by this AD on U.S. operators is estimated to be $2,880, or $480 per airplane, per inspection cycle.

It would take approximately 20 work hours (5 work hours per engine) per airplane, to accomplish the proposed 18-month thrust reverser system checks described in Boeing Service Bulletin 747–78A2159, at an average labor rate of $60 per work hour. Based on these figures, the cost impact of the test proposed by this AD on U.S. operators is estimated to be $7,200, or $1,200 per airplane, per test cycle.

It would take approximately 544 work hours per airplane, to accomplish the proposed provisional wiring, at an average labor rate of $60 per work hour. Required parts would be provided by the manufacturer at no cost to the operators. Based on these figures, the cost impact of the proposed AD on U.S. operators is estimated to be $195,840, or $32,640 per airplane.

It would take approximately 593 work hours per airplane, to accomplish the proposed sync lock installation, at an average labor rate of $60 per work hour. Required parts would be provided by the manufacturer at no cost to the operators. Based on these figures, the cost impact of the installation proposed by this AD on U.S. operators is estimated to be $213,480, or $35,580 per airplane.

It would take approximately 4 work hours per airplane, to accomplish the proposed functional test of the additional locking system, at an average labor rate of $60 per work hour. Based on these figures, the cost impact of the test proposed by this AD on U.S. operators is estimated to be $1,680, or $240 per airplane, per test cycle.

The cost impact figures discussed above are based on assumptions that no operator has yet accomplished any of the proposed requirements of this AD action, and that no operator would

accomplish those actions in the future if this AD were not adopted.

Regulatory Impact

The regulations proposed herein would not have substantial direct effects on the States, on the relationship between the national government and the States, or on the distribution of power and responsibilities among the various levels of government. Therefore, in accordance with Executive Order 12612, it is determined that this proposal would not have sufficient federalism implications to warrant the preparation of a Federalism Assessment.

For the reasons discussed above, I certify that this proposed regulation (1) is not a ''significant regulatory action'' under Executive Order 12866; (2) is not a ''significant rule'' under the DOT Regulatory Policies and Procedures (44 FR 11034, February 26, 1979); and (3) if promulgated, will not have a significant economic impact, positive or negative, on a substantial number of small entities under the criteria of the Regulatory Flexibility Act. A copy of the draft regulatory evaluation prepared for this action is contained in the Rules Docket. A copy of it may be obtained by contacting the Rules Docket at the location provided under the caption ADDRESSES.

List of Subjects in 14 CFR Part 39

Air transportation, Aircraft, Aviation safety, Safety.

The Proposed Amendment

Accordingly, pursuant to the authority delegated to me by the Administrator, the Federal Aviation Administration proposes to amend part 39 of the Federal Aviation Regulations (14 CFR part 39) as follows:

PART 39—AIRWORTHINESS DIRECTIVES

1. The authority citation for part 39 continues to read as follows:

Authority: 49 U.S.C. 106(g), 40113, 44701.

§ 39.13 [Amended]

2. Section 39.13 is amended by adding the following new airworthiness directive:

Boeing: Docket 99–NM–65–AD.

Applicability: Model 747 series airplanes equipped with Pratt & Whitney JT9D–70 series engines; certificated in any category.

Note 1: This AD applies to each airplane identified in the preceding applicability provision, regardless of whether it has been modified, altered, or repaired in the area subject to the requirements of this AD. For airplanes that have been modified, altered, or repaired so that the performance of the requirements of this AD is affected, the owner/operator must request approval for an alternative method of compliance in accordance with paragraph (g) of this AD. The request should include an assessment of the effect of the modification, alteration, or repair on the unsafe condition addressed by this AD; and, if the unsafe condition has not been eliminated, the request should include specific proposed actions to address it.

Compliance: Required as indicated, unless accomplished previously.

To prevent inadvertent deployment of a thrust reverser during flight and consequent reduced controllability of the airplane, accomplish the following:

Inspection/Repair

(a) Within 200 flight hours or 50 flight cycles after the effective date of this AD, whichever occurs later: Inspect the thrust reverser wiring on each engine to detect discrepancies, in accordance with Boeing Service Bulletin 747–78A2149, Revision 1, dated May 9, 1996, or Revision 2, dated August 29, 1996. Prior to further flight, repair any discrepancy, in accordance with the service bulletin.

Modification and Tests

(b) Within 5,000 flight hours or 500 flight cycles after the effective date of this AD, whichever occurs later: Accomplish the thrust reverser wiring modification on each engine in accordance with Boeing Service Bulletin 747–78A2149, Revision 1, dated May 9, 1996, or Revision 2 dated August 29, 1996.

(1) Concurrent with accomplishment of Boeing Service Bulletin 747–78A2149, Revision 1 or Revision 2: Accomplish the modification of the thrust reverser control system wiring specified in Rohr Service Bulletin TBC–CNS 78–32, Revision 1, dated August 20, 1996.

(2) Prior to further flight following accomplishment of the modification specified in paragraphs (b) and (b)(1): Perform an operational test of the thrust reverser wiring on each engine to detect discrepancies in accordance with Boeing Service Bulletin 747–78A2149, Revision 1, dated May 9, 1996, or Revision 2 dated August 29, 1996. Prior to further flight, correct any discrepancy detected, in accordance with the service bulletin.

Repetitive Inspections and Tests

(c) Perform the inspections and tests of the thrust reverser control and indication system to detect discrepancies at the times specified in paragraphs (c)(1) and (c)(2) of this AD, in accordance with Boeing Alert Service Bulletin 747–78A2159, dated May 18, 1995.

(1) Within 90 days after the effective date of this AD, inspect in accordance with Part III, ''1,000 Flight Hour Inspections'' of the Accomplishment Instructions of the alert service bulletin. Repeat at intervals not to exceed 1,000 flight hours until accomplishment of paragraph (f) of this AD.

(2) Within 1,500 flight hours or 4 months after the effective date of this AD, whichever occurs later, inspect and test in accordance with Part III, ''18 Month Thrust Reverser System Checks'' of the Accomplishment Instructions of the alert service bulletin. Repeat at intervals not to exceed 18 months until accomplishment of paragraph (e) of this AD.

Corrective Actions

(d) If any inspection or test required by paragraph (c) of this AD cannot be successfully performed as specified in the referenced service bulletin, or if any discrepancy is detected during any inspection or test, prior to further flight, repair in accordance with Boeing Alert Service Bulletin 747–78A2159, dated May 18, 1995.

Additionally, prior to further flight, any failed inspection or test required by paragraph (c) of this AD must be repeated and successfully accomplished.

Terminating Action

(e) Accomplish the requirements of paragraphs (e)(1) and (e)(2) of this AD at the times specified in those paragraphs. Accomplishment of these actions constitutes terminating action for the repetitive inspections and tests required by paragraph (c) of this AD.

(1) Within 36 months after the effective date of this AD: Install an additional locking system on each engine thrust reverser in accordance with the Accomplishment Instructions of Boeing Service Bulletin 747–78–2153, Revision 1, dated November 27, 1996.

(2) Prior to or concurrent with accomplishment of Boeing Service Bulletin 747–78–2153, Revision 1: Accomplish the installation of provisional wiring for the locking system on the thrust reversers in accordance with Boeing Service Bulletins 747–78–2135, dated August 31, 1995; and 747–78A2149, Revision 1, dated May 9, 1996, or Revision 2, dated August 29, 1996. Additionally, concurrent with accomplishment of Boeing Service Bulletin 747–78–2153, Revision 1, accomplish the installation of the provisional wiring described previously in accordance with Rohr Service Bulletin TBC–CNS 78–33, Revision 1, dated August 20, 1996.

Repetitive Functional Tests

(f) Within 4,000 hours time-in-service after accomplishment of paragraph (e) of this AD: Perform a functional test to detect discrepancies of the additional locking system on each thrust reverser, in accordance with Appendix 1 (including Figures 1 and 2) of this AD. Prior to further flight, correct any discrepancy detected, in accordance with the procedures described in the Boeing 747 Airplane Maintenance Manual. Repeat the functional test thereafter at intervals not to exceed 4,000 hours time-in-service.

Alternative Methods of Compliance

(g) An alternative method of compliance or adjustment of the compliance time that provides an acceptable level of safety may be used if approved by the Manager, Seattle Aircraft Certification Office (ACO), FAA, Transport Airplane Directorate. Operators shall submit their requests through an appropriate FAA Principal Maintenance Inspector, who may add comments and then send it to the Manager, Seattle ACO.

Note 2: Information concerning the existence of approved alternative methods of compliance with this AD, if any, may be obtained from the Seattle ACO.

Special Flight Permit

(h) Special flight permits may be issued in accordance with sections 21.197 and 21.199 of the Federal Aviation Regulations (14 CFR 21.197 and 21.199) to operate the airplane to a location where the requirements of this AD can be accomplished.

Appendix 1

Thrust Reverser Sync-Lock Integrity Test

1. General

A. Equipment and Materials

(1) Thrust reverser flex drive adapter—196K8004–1 or 196K8004–3; Rohr Industries, Inc., Chula Vista, California 92012.

2. Thrust Reverser Sync-Lock Integrity Test

B. Prepare for the Thrust Reverser Sync Lock Test

(1) Open applicable T/R CONT & BLEED SYS circuit breaker on P12 circuit breaker panel.
(2) Open fan cowl doors (Ref 71–11–02, Maintenance Practices).
(3) Check that forward and aft circumferential latches and all tension latches are engaged and locked.
(4) Depress drive unit latch operating arm and retain by engaging latch arm (detail C).
(5) Disengage stow latch hook on left and right thrust reversers (detail D).
(6) On either lower slave actuator (detail B), either remove coverplate from forward drive pad or remove locking plug from lower drive pad.
(7) Move left-hand sync-lock lever to the unlocked position.
(8) Using appropriate drive adapter (196K8004–1 at forward drive pad or 196K8004–3 at lower drive pad), attempt to manually deploy sleeves.

CAUTION: DO NOT APPLY A TORQUE LOAD OF MORE THAN 75 POUND-INCHES TO THE ACTUATOR; A GREATER TORQUE LOAD CAN CAUSE DAMAGE TO THE MECHANISM.

(9) If sleeves move, replace the right-hand sync-lock.
(10) Move left-hand sync-lock lever to the locked position.
(11) Move right-hand sync-lock lever to the unlocked position.
(12) Repeat step (8) above.
(13) If sleeves move, replace the left-hand sync-lock.
(14) Move left-hand sync-lock lever to the unlocked position.
(15) Rotate actuator gearshaft to fully stow the sleeves.
(16) When translating sleeves reach stowed position, check that stow latch hooks have engaged fixed hooks on both sides (detail D).
(17) Depress latch operating arm and disengage latch arm (detail C); allow latch arm to raise.
(18) After releasing arm, verify latch engagement by attempting to rotate feedback gear on drive unit using 1/4-inch square drive; gear shall not rotate in excess of 0.1 of a turn.

CAUTION: DO NOT APPLY A TORQUE LOAD OF MORE THAN 25 POUND-INCHES ON FEEDBACK GEAR; A GREATER TORQUE LOAD CAN CAUSE DAMAGE TO THE MECHANISM.

(19) As applicable, install locking plug (with square section facing away from drive pad) or coverplate on actuator drive pad. Secure plug or plate with bolts tightened to 50–70 pound-inches.
(20) Move both left-and right-hand sync-lock levers to the locked position.
(21) Close fan cowl doors (Ref 71–11–02, Maintenance Practices).
(22) Close T/R CONT & BLEED SYS circuit breaker.
(23) Repeat the sync-lock integrity test on all remaining thrust reversers.

BILLING CODE 4910–13–P

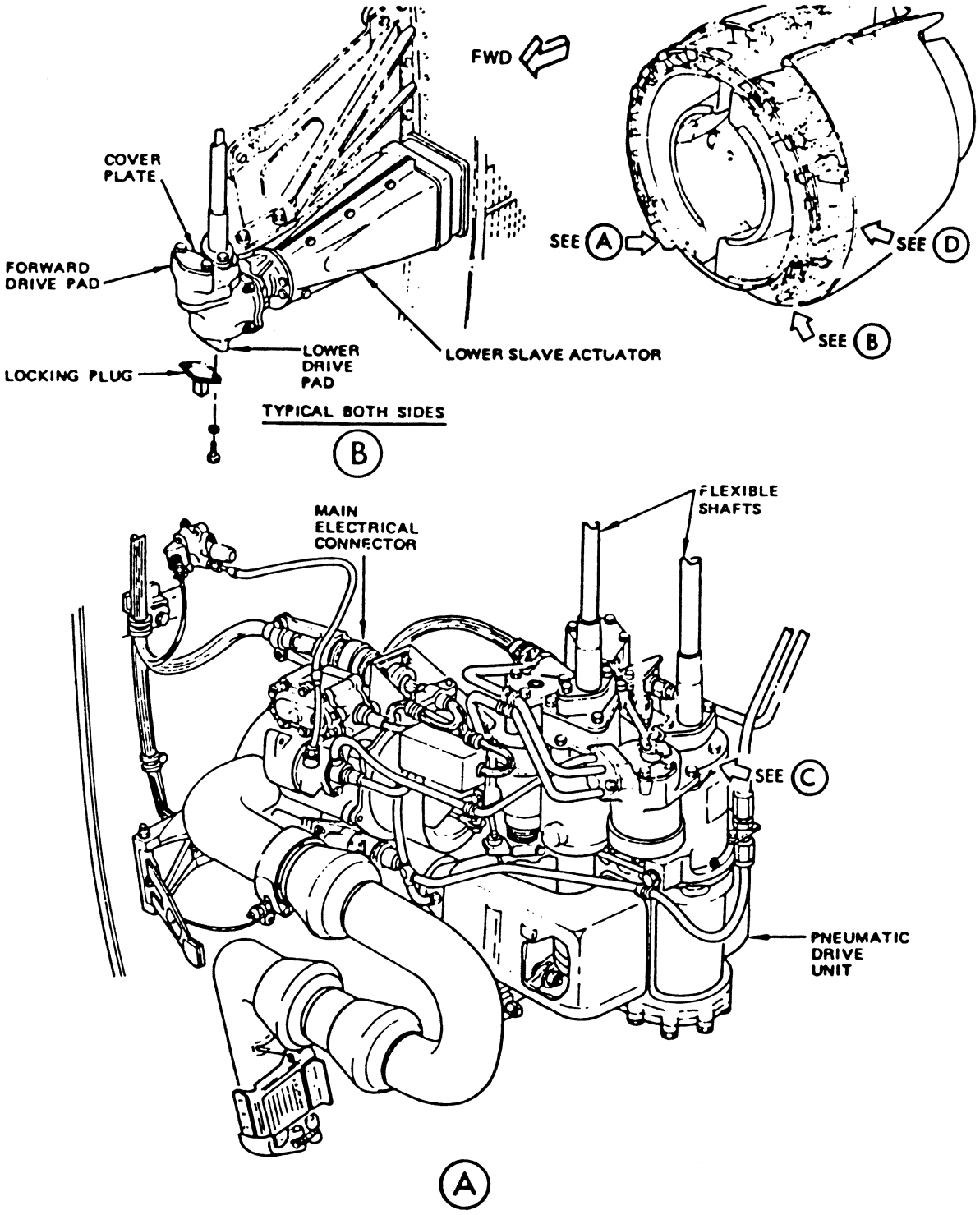
FWD
COVER PLATE
FORWARD DRIVE PAD
LOCKING PLUG
LOWER DRIVE PAD
LOWER SLAVE ACTUATOR
TYPICAL BOTH SIDES
B
SEE A
SEE D
SEE B
MAIN ELECTRICAL CONNECTOR
FLEXIBLE SHAFTS
SEE C
PNEUMATIC DRIVE UNIT
A

Figure 1

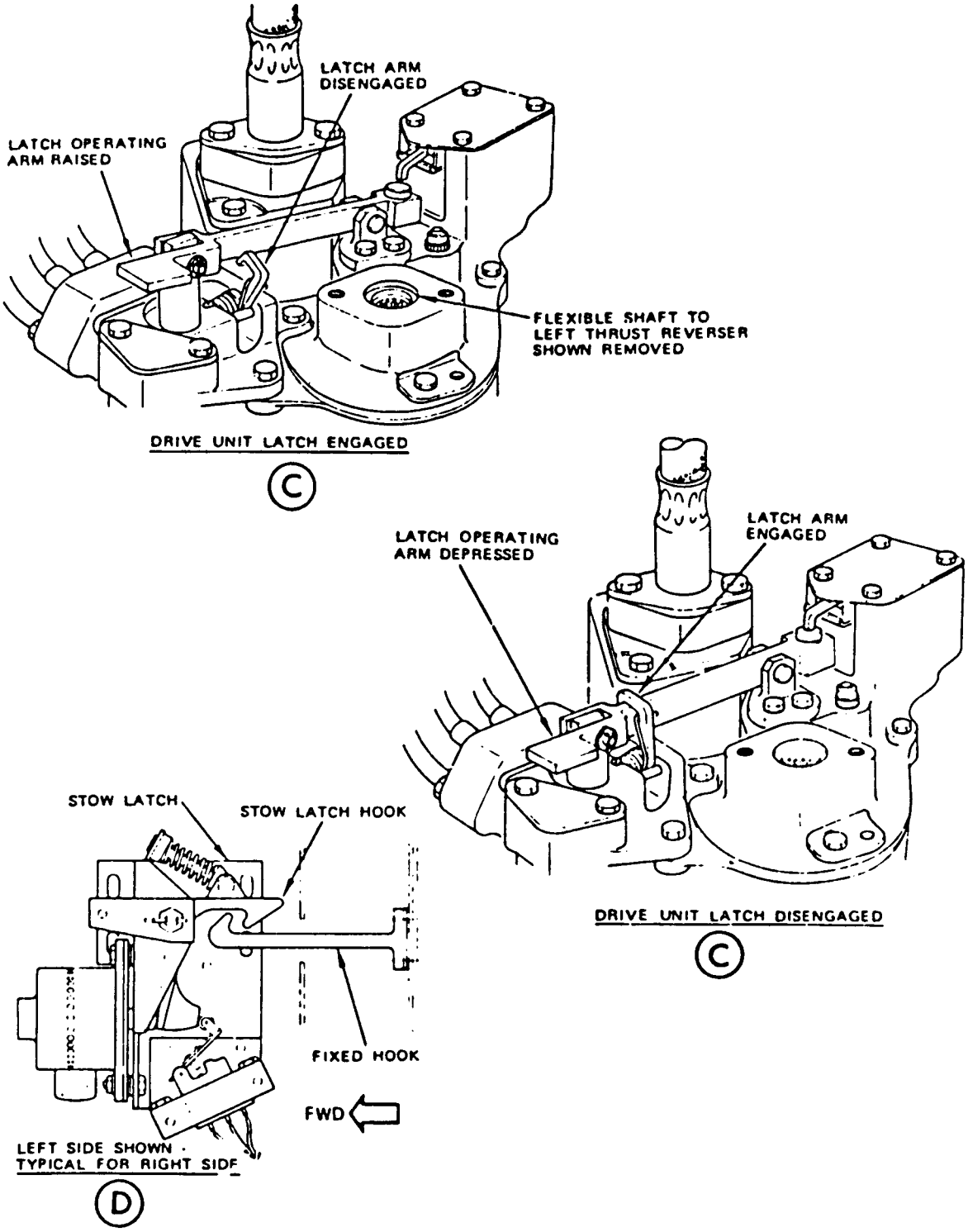
LATCH ARM DISENGAGED
LATCH OPERATING ARM RAISED
FLEXIBLE SHAFT TO LEFT THRUST REVERSER SHOWN REMOVED
DRIVE UNIT LATCH ENGAGED
C
LATCH OPERATING ARM DEPRESSED
LATCH ARM ENGAGED
DRIVE UNIT LATCH DISENGAGED
C
STOW LATCH
STOW LATCH HOOK
FIXED HOOK
FWD
LEFT SIDE SHOWN - TYPICAL FOR RIGHT SIDE
D

Figure 2

Issued in Renton, Washington, on January 28, 2000.

Donald L. Riggin,

Acting Manager Transport Airplane Directorate, Aircraft Certification Service.

[FR Doc. 00–2415 Filed 2–3–00; 8:45 am]

BILLING CODE 4910–13–C

DEPARTMENT OF AGRICULTURE

Forest Service

36 CFR Parts 217 and 219

National Forest System Land and Resource Management Planning

AGENCY: Forest Service, USDA.

ACTION: Proposed rule; extension of public comment period.

SUMMARY: On October 5, 1999, the Forest Service published a proposed rule to guide land and resource management planning on national forests and grasslands (64 FR 54074). The agency extended the public comment period for this proposed rule, which is scheduled to end on February 3, 2000 (64 FR 70204). In response to Congressional requests and the need to provide the public more time to review and evaluate the proposed regulations, the Forest Service is extending the public comment period until February 10, 2000.

DATES: Comments must be submitted in writing and must be received by February 10, 2000.

ADDRESSES: Send written comments on the proposed planning rule to the CAET-USDA Team, Attn. Planning Rule, Forest Service, USDA, 200 East Broadway, Room 103, Post Office Box 7669, Missoula, MT 59807; or via email to planreg/wo__caet@fs.fed.us; or via facsimile to (406) 329–3021.

Comments, including names and addresses when provided, are subject to public inspection and copying. The public may inspect comments received on this proposed rule in the Office of Deputy Chief, National Forest Systems, Third Floor, Southwest Wing, Yates Building, 14th and Independence Ave., SW, Washington, DC between the hours of 8:30 AM and 4:00 PM.

FOR FURTHER INFORMATION CONTACT: Bob Cunningham, Ecosystem Management Coordination Staff, telephone: (202) 205–7820.

Dated: February 1, 2000.

Barbara C. Weber,

Acting Associate Chief for Natural Resources.

[FR Doc. 00–2597 Field 2–3–00; 8:45 am]

BILLING CODE 3410–11–M

ENVIRONMENTAL PROTECTION AGENCY

40 CFR Part 52

[CA236–0204b; FRL–6533–7]

Approval and Promulgation of State Implementation Plans; California State Implementation Plan Revision, Monterey Bay Unified Air Pollution Control District

AGENCY: Environmental Protection Agency (EPA).

ACTION: Proposed rule.

SUMMARY: EPA is proposing revisions to the California State Implementation Plan (SIP) which concern an emission offsets exemption for pollution control projects that are mandated by District, state, or federal regulation.

The intended effect of this action is to regulate emissions from stationary sources of air pollution subject to District new source review (NSR) regulation in accordance with the requirements of the Clean Air Act, as amended in 1990 (CAA or the Act). In the Final Rules section of this **Federal Register**, the EPA is approving the state's SIP submittal as a direct final rule without prior proposal because the Agency views this as a noncontroversial revision and anticipates no adverse comments. A detailed rationale for this approval is set forth in the direct final rule. If no adverse comments are received, no further activity is contemplated. If EPA receives adverse comments, the direct final rule will be withdrawn and all public comments received will be addressed in a subsequent final rule based on this proposed rule. The EPA will not institute a second comment period. Any parties interested in commenting should do so at this time.

DATES: Written comments must be received by March 6, 2000.

ADDRESSES: Comments should be addressed to: Roger Kohn, Permits Office (AIR–3), Air Division, U.S. Environmental Protection Agency, Region IX, 75 Hawthorne Street, San Francisco, CA 94105–3901.

Copies of the rule revisions and EPA's evaluation report of each rule are available for public inspection at EPA's Region 9 office during normal business hours. Copies of the submitted rule revisions are also available for inspection at the following locations:

California Air Resources Board, Stationary Source Division, Rule Evaluation Section, 2020 ''L'' Street, Sacramento, CA 95812.

Monterey Bay Unified Air Pollution Control District, 24580 Silver Cloud Court, Monterey CA 93940.

FOR FURTHER INFORMATION CONTACT: Roger Kohn, Permits Office (AIR–3), Air Division, U.S. Environmental Protection Agency, Region 9, 75 Hawthorne Street, San Francisco, CA 94105–3901, Telephone: (415) 744–1238).

SUPPLEMENTARY INFORMATION: This document concerns Monterey Bay Unified Air Pollution Control District Rule 207, Review of New or Modified Sources, submitted to EPA on October 29, 1999 by the California Air Resources Board. For further information, please see the information provided in the direct final action that is located in the rules section of this **Federal Register**.

Dated: January 21, 2000.

Laura Yoshii,

Acting Regional Administrator, Region IX.

[FR Doc. 00–2471 Filed 2–3–00; 8:45 am]

BILLING CODE 6560–50–P

ENVIRONMENTAL PROTECTION AGENCY

40 CFR Part 52

[CA 105–0201 FRL–6532–9]

Approval and Promulgation of Implementation Plans; California State Implementation Plan Revision; Kern County Air Pollution Control District

AGENCY: Environmental Protection Agency (EPA).

ACTION: Proposed rule.

SUMMARY: EPA is proposing to approve a revision to the California State Implementation Plan (SIP) for ozone. The revision concerns the control of oxides of nitrogen (NO_X) for the Kern County Air Pollution Control District (KCAPCD). The revision concerns KCAPCD Rule 425.1 for the control of oxides of nitrogen (NO_X) emissions from hot mix asphalt paving plants. The intended effect of proposing approval of this rule is to regulate emissions of (NO_X) in accordance with the requirements of the Clean Air Act, as amended in 1990 (CAA or the Act). EPA's final action on this proposed rule will incorporate this rule into the Federally approved SIP. EPA has evaluated this rule and is proposing to approve it under provisions of the CAA regarding EPA actions on SIP submittals, SIPs for national primary and secondary ambient air quality standards (NAAQS), and plan requirements for nonattainment areas.

DATES: Comments must be received on or before March 6, 2000.

ADDRESSES: Comments may be mailed to: Andrew Steckel, Rulemaking Office, AIR–4, Air Division, U.S.