2, as applicable, of the Accomplishment Instructions of Boeing Service Bulletin 2999, Revision 3, dated January 12, 1972, or Revision 4, dated January 31, 1991 (for Model 707 series airplanes); or Boeing Service Bulletin 727–52–79, Revision 4, dated June 19, 1981, or Boeing Alert Service Bulletin 727–52A0079, Revision 5, dated June 17, 1983, or Revision 6, dated January 11, 1990 (for Model 727 series airplanes); as applicable; constitutes terminating action for the requirements of paragraphs (a) and (b) of this AD.

New Requirements of This AD

Post-Repair/Post-Mod Repetitive Inspections

(e) For Model 727 series airplanes: Within 27,000 flight cycles after accomplishment of the repair specified in paragraph (c) of this AD, and/or the modification specified in paragraph (d) of this AD, as applicable; or within 1,000 flight cycles after the effective date of this AD; whichever occurs later; accomplish the requirements of paragraph (e)(1) or (e)(2) of this AD, as applicable.

(1) For airplanes that have accomplished the modification specified in Part II, Option 1, of the Accomplishment Instructions of Boeing Service Bulletin 727–52–79, Revision 4, dated June 19, 1981, or Boeing Alert Service Bulletin 727–52A0079, Revision 5, dated June 17, 1983, or Revision 6, dated January 11, 1990: Perform a detailed visual and eddy current inspection of the modified area and/or any repaired area, to detect cracks, in accordance with the service bulletin. Repeat the inspections at intervals not to exceed 3,800 flight cycles.

(2) For airplanes that have accomplished the modification specified in Part II, Option 2, of the Accomplishment Instructions of Boeing Service Bulletin 727–52–79, Revision 4, dated June 19, 1981, or Boeing Alert Service Bulletin 727–52A0079, Revision 5, dated June 17, 1983, or Revision 6, dated January 11, 1990: Perform an internal and external detailed visual and an eddy current inspection of the modified area to detect cracks in accordance with the service bulletin. Repeat the inspections at intervals not to exceed 3,800 flight cycles.

Repair

(f) If any cracking is detected during any inspection required by paragraph (e)(1) or (e)(2) of this AD: Prior to further flight, repair any cracks detected in accordance with a method approved by the Manager, Seattle Aircraft Certification Office (ACO), FAA, Transport Airplane Directorate; or in accordance with data meeting the type certification basis of the airplane approved by a Boeing Company Designated Engineering Representative who has been authorized by the Manager, Seattle ACO, to make such findings. For a repair method to be approved by the Manager, Seattle ACO, as required by this paragraph, the Manager's approval letter must specifically reference this AD.

Alternative Methods of Compliance

(g)(1) An alternative method of compliance or adjustment of the compliance time that provides an acceptable level of safety may be used if approved by the Manager, Seattle ACO. Operators shall submit their requests through an appropriate FAA Principal Maintenance Inspector, who may add comments and then send it to the Manager, Seattle ACO.

(2) Alternative methods of compliance approved previously in accordance with AD 83–02–09, amendment 39–4549, are approved as alternative methods of compliance with this AD.

Note 3: Information concerning the existence of approved alternative methods of compliance with this AD, if any, may be obtained from the Seattle ACO.

Note 4: Incorporation of the Boeing Model 707–720 Supplemental Structural Inspection Document (SSID) into the operator's approved airplane maintenance program constitutes an approved alternative method of compliance for Model 707 and 720 series airplanes.

Special Flight Permits

(h) Special flight permits may be issued in accordance with sections 21.197 and 21.199 of the Federal Aviation Regulations (14 CFR 21.197 and 21.199) to operate the airplane to a location where the requirements of this AD can be accomplished.

Issued in Renton, Washington, on April 13, 2000.

Charles D. Huber,

Acting Manager, Transport Airplane Directorate, Aircraft Certification Service.

[FR Doc. 00–9821 Filed 4–18–00; 8:45 am]

BILLING CODE 4910–13–U

DEPARTMENT OF TRANSPORTATION

Federal Aviation Administration

14 CFR Part 39

[Docket No. 99–SW–80–AD]

Airworthiness Directives; Bell Helicopter Textron Canada Model 206L, L–1, L–3, and L–4 Helicopters

AGENCY: Federal Aviation Administration, DOT.

ACTION: Notice of proposed rulemaking (NPRM).

SUMMARY: This document proposes the supersedure of an existing airworthiness directive (AD), applicable to Bell Helicopter Textron Canada (BHTC) Model 206L, L–1, L–3, and L–4 helicopters. That AD currently requires removing the horizontal stabilizer supports and inspecting the edges of the tailboom skins around the horizontal stabilizer openings for a crack. This action would require inspecting the tailboom skins for a crack, replacing a cracked tailboom with a modified tailboom before further flight, and implementing a recurring inspection of the modified tailboom. This proposal is prompted by several additional reports of cracks found during mandatory inspections. The actions specified by the proposed AD are intended to detect a crack in the tailboom and to prevent separation of the tailboom from the helicopter and subsequent loss of control of the helicopter.

DATES: Comments must be received on or before June 19, 2000.

ADDRESSES: Submit comments in triplicate to the Federal Aviation Administration (FAA), Office of the Regional Counsel, Southwest Region, Attention: Rules Docket No. 99–SW–80–AD, 2601 Meacham Blvd., Room 663, Fort Worth, Texas 76137. Comments may be inspected at this location between 9 a.m. and 3 p.m., Monday through Friday, except Federal holidays.

The service information referenced in the proposed rule may be obtained from Bell Helicopter Textron Canada, 12,800 Rue de l'Avenir, Mirabel, Quebec JON1LO, telephone (800) 463–3036, fax (514) 433–0272. This information may be examined at the FAA, Office of the Regional Counsel, Southwest Region, 2601 Meacham Blvd., Room 663, Fort Worth, Texas.

FOR FURTHER INFORMATION CONTACT: Sharon Miles, Aviation Safety Engineer, FAA, Rotorcraft Directorate, Regulations Group, Fort Worth, Texas 76193–0111 telephone (817) 222–5122, fax (817) 222–5961.

SUPPLEMENTARY INFORMATION:

Comments Invited

Interested persons are invited to participate in the making of the proposed rule by submitting such written data, views, or arguments as they may desire. Communications should identify the Rules Docket number and be submitted in triplicate to the address specified above. All communications received on or before the closing date for comments, specified above, will be considered before taking action on the proposed rule. The proposals contained in this notice may be changed in light of the comments received.

Comments are specifically invited on the overall regulatory, economic, environmental, and energy aspects of the proposed rule. All comments submitted will be available, both before and after the closing date for comments, in the Rules Docket for examination by interested persons. A report summarizing each FAA-public contact concerned with the substance of this proposal will be filed in the Rules Docket.

Commenters wishing the FAA to acknowledge receipt of their comments

submitted in response to this notice must submit a self-addressed, stamped postcard on which the following statement is made: ''Comments to Docket No. 99–SW–80–AD.'' The postcard will be date stamped and returned to the commenter.

Availability of NPRMs

Any person may obtain a copy of this NPRM by submitting a request to the FAA, Office of the Regional Counsel, Southwest Region, Attention: Rules Docket No. 99–SW–80–AD, 2601 Meacham Blvd., Room 663, Fort Worth, Texas 76137.

Discussion

On June 16, 1999, the FAA issued AD 99–13–12, Amendment 39–11207 (64 FR 33747, June 24, 1999), to require at specified time intervals visually inspecting and preflight checking for cracks around the horizontal stabilizer opening. The AD also requires within 50 hours time-in-service (TIS) removing the horizontal stabilizer supports and visually inspecting the edges of the tailboom skins around the horizontal stabilizer openings for a crack using a fluorescent-penetrant inspection. That action was prompted by crack growth analysis that indicated the need to detect cracks before they propagate from underneath the horizontal stabilizer supports. The requirements of that AD are intended to detect a crack in the tailboom skin, prevent separation of the tailboom from the helicopter, and subsequent loss of control of the helicopter.

Since the issuance of that AD, several additional cracks in tailbooms were found during mandatory inspections.

Since an unsafe condition has been identified that is likely to exist or develop on other BHTC Model 206L, L–1, L–3, and L–4 helicopters of the same type design, the proposed AD would supersede AD 99–13–12 to require the following:

- Inspecting the tailboom skins for a crack;
- Replacing any cracked tailboom with an airworthy modified tailboom;
- Modifying the tailboom within the next 300 hours time-in-service (TIS) by adding a doubler on the left side of the tailboom in the area of the left horizontal stabilizer, and
- Inspecting the modified tailboom for a crack at intervals not to exceed 1200 hours TIS.

This proposal is prompted by several additional reports of cracks found during mandatory inspections. The actions specified by the proposed AD are intended to detect a crack in the tailboom and to prevent separation of the tailboom from the helicopter and subsequent loss of control of the helicopter.

Transport Canada, which is the airworthiness authority for Canada, has notified the FAA that an unsafe condition may exist on BHTC Model 206L, L–1, L–3, and L–4 helicopters. Transport Canada advises that cracks were found on the tailboom skins in the area of the horizontal stabilizer.

BHTC has issued Alert Service Bulletin 206L–99–115, Revision D, dated January 26, 2000 (ASB), which specifies modifying the tailboom by adding a doubler on the left side of the tailboom in the area of the left horizontal stabilizer and inspecting the modified tailboom for a crack at intervals not to exceed 1200 hours of operation. Transport Canada classified Revision A of this ASB as mandatory and issued AD CF–98–42R2, dated July 22, 1999. Transport Canada has subsequently issued AD CF–1998–42R3, dated February 17, 2000, which extended the compliance date.

These helicopter models are manufactured in Canada and are type certificated for operation in the United States under the provisions of section 21.29 of the Federal Aviation Regulations (14 CFR 21.29) and the applicable bilateral airworthiness agreement. Pursuant to this bilateral airworthiness agreement, Transport Canada has kept the FAA informed of the situation described above. The FAA has examined the findings of Transport Canada, reviewed all available information, and determined that AD action is necessary for products of these type designs that are certificated for operation in the United States.

The FAA estimates that 1546 helicopters of U.S. registry would be affected by this proposed AD, that it would take approximately 52 work hours to inspect and replace the tailbooms, if necessary, and that the average labor rate is $60 per work hour. Required parts would cost approximately $22,954 per helicopter. Based on these figures, the total cost impact of the proposed AD on U.S. operators is estimated to be $40,310,404 if all tailbooms must be replaced.

The regulations proposed herein would not have a substantial direct effect on the States, on the relationship between the national Government and the States, or on the distribution of power and responsibilities among the various levels of government. Therefore, it is determined that this proposal would not have federalism implications under Executive Order 13132.

For the reasons discussed above, I certify that this proposed regulation (1) is not a ''significant regulatory action'' under Executive Order 12866; (2) is not a ''significant rule'' under the DOT Regulatory Policies and Procedures (44 FR 11034, February 26, 1979); and (3) if promulgated, will not have a significant economic impact, positive or negative, on a substantial number of small entities under the criteria of the Regulatory Flexibility Act. A copy of the draft regulatory evaluation prepared for this action is contained in the Rules Docket. A copy of it may be obtained by contacting the Rules Docket at the location provided under the caption **ADDRESSES.**

List of Subjects in 14 CFR Part 39

Air transportation, Aircraft, Aviation safety, Safety.

The Proposed Amendment

Accordingly, pursuant to the authority delegated to me by the Administrator, the Federal Aviation Administration proposes to amend part 39 of the Federal Aviation Regulations (14 CFR part 39) as follows:

PART 39—AIRWORTHINESS DIRECTIVES

1. The authority citation for part 39 continues to read as follows:

Authority: 49 U.S.C. 106(g), 40113, 44701.

§ 39.13 [Amended]

2. Section 39.13 is amended by removing Amendment 39–11207 (64 FR 33747, June 24, 1999), and by adding a new airworthiness directive (AD), to read as follows:

Bell Helicopter Textron Canada: Docket No. 99–SW–80–AD. Supersedes AD 99–13–12, Amendment 39–11207, Docket No. 99–SW–23–AD.

Applicability: Model 206L, serial numbers (S/N) 45004 through 45049, 45051 through 45153, and 46601 through 46617; Model 206L–1, S/N 45154 through 45790; Model 206L–3, S/N 51001 through 51612; and Model 206L–4, S/N 52001 through 52163, 52165 through 52212, and 52214 through 52216, with tailboom, part number (P/N) 206–033–004-all dash numbers, installed, certificated in any category.

Note 1: This AD applies to each helicopter identified in the preceding applicability provision, regardless of whether it has been otherwise modified, altered, or repaired in the area subject to the requirements of this AD. For helicopters that have been modified, altered, or repaired so that the performance of the requirements of this AD is affected, the owner/operator must request approval for an alternative method of compliance in accordance with paragraph (g) of this AD. The request should include an assessment of the effect of the modification, alteration, or repair on the unsafe condition addressed by this AD; and if the unsafe condition has not

been eliminated, the request should include specific proposed actions to address it.

Compliance: Required as indicated, unless accomplished previously.

To detect a crack in the tailboom skin and to prevent separation of the tailboom from the helicopter and subsequent loss of control of the helicopter, accomplish the following:

(a) Before further flight and thereafter at intervals not to exceed 10 hours time-in-service (TIS) until accomplishing the one-time fluorescent-penetrant inspection (FPI) required by paragraph (c)(2) of this AD, visually inspect for any crack in the shaded areas shown in Figure 1. Use a 10-power or higher magnifying glass. If a crack is found, replace the tailboom with an airworthy tailboom modified according to the requirements of paragraph (e) of this AD before further flight.

(b) At intervals not to exceed 5 hours TIS, visually check for any crack in the tailboom as depicted by the shaded areas shown in Figure 1. If any crack is found, replace the tailboom with an airworthy tailboom modified according to the requirements of paragraph (e) of this AD before further flight. The visual check may be performed by an owner/operator (pilot) holding at least a private pilot certificate and must be entered into the aircraft records showing compliance with paragraph (b) of this AD in accordance with sections 43.11 and 91.417 (a)(2)(v) of the Federal Aviation Regulations (14 CFR sections 43.11 and 91.417 (a)(2)(v)).

(c) Within 50 hours TIS:

(1) Remove all 4 horizontal stabilizer supports, P/N 206–023–100-all dash numbers, from the tailboom and the horizontal stabilizer.

(2) Perform a one-time FPI of the edges of the tailboom skins for any crack around the left and right horizontal stabilizer openings (Figure 1). Remove paint and primer to inspect the edges and exterior skin surface in the skin area at least ¾ inch around the edges of the horizontal stabilizer openings.

(3) If a crack is found, replace the tailboom with an airworthy tailboom modified according to the requirements of paragraph (e) of this AD before further flight.

BILLING CODE 4910–13–U

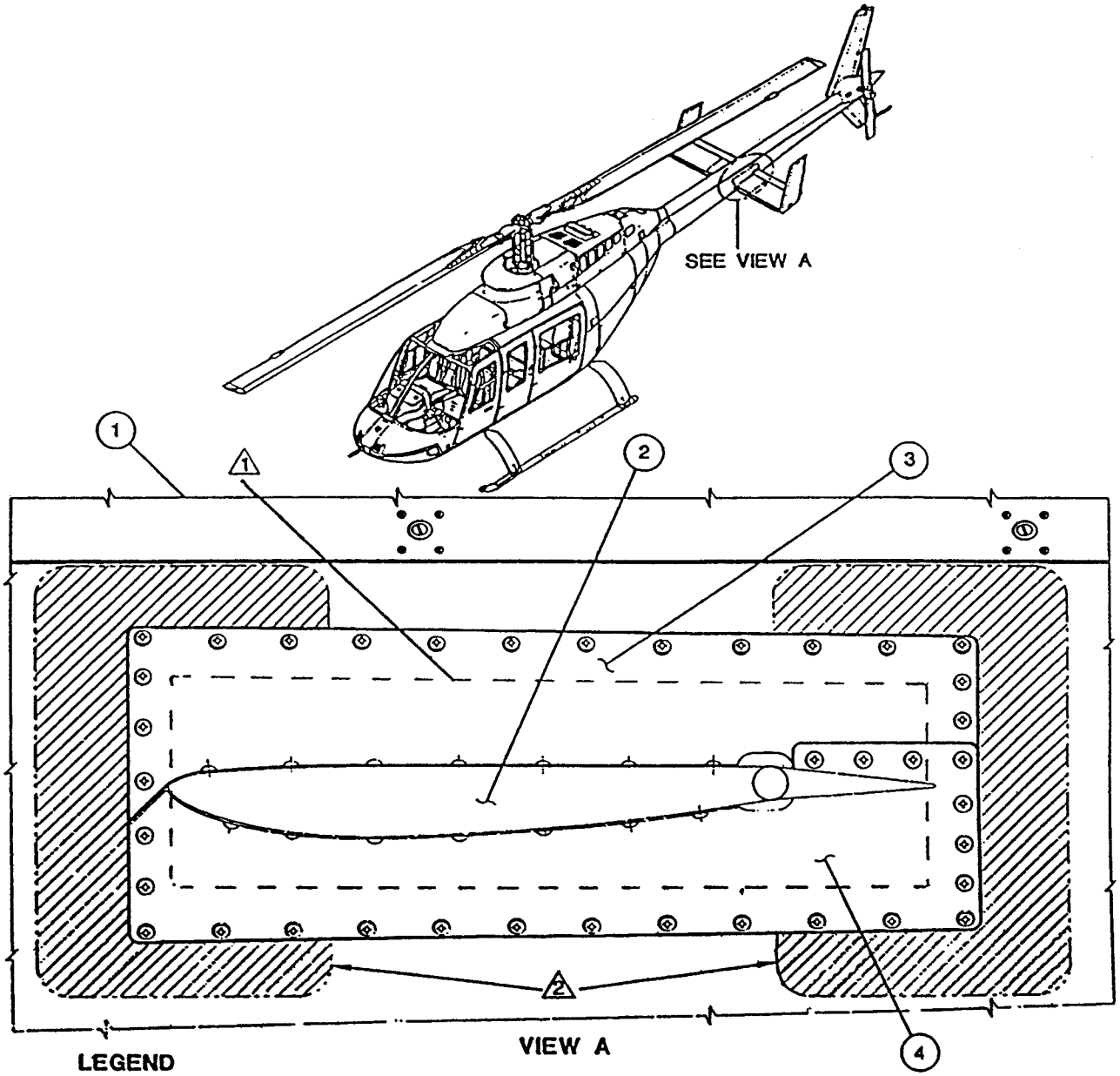

LEGEND

1. Tailboom assembly
2. Horizontal stabilizer
3. Upper support
4. Lower support

NOTES

2 Inspect for a crack in these two areas on both sides of the tailboom.

1 Inspect entire edge of stabilizer opening on both sides of the tailboom.

Figure 1

BILLING CODE 4910–13–C

(d) At intervals not to exceed 100 hours TIS after completion of the FPI, accomplish the following:

(1) Remove all 4 horizontal stabilizer supports, P/N 206–023–100-all dash numbers, from the tailboom and the horizontal stabilizer.

(2) Visually inspect the entire edge of the horizontal stabilizer opening on both sides of the tailboom for any crack using a 10-power or higher magnifying glass.

(3) If a crack is found, replace the tailboom with an airworthy tailboom modified according to the requirements of paragraph (e) of this AD before further flight.

(e) Within the next 300 hours TIS, inspect and modify the tailboom in accordance with Parts I, II, and III of Bell Helicopter Textron Canada (BHTC) Alert Service Bulletin 206L–99–115, Revision D, dated January 26, 2000 (ASB). If a crack is found while accomplishing Part I of the ASB, replace the tailboom with an airworthy tailboom modified as required by this paragraph before further flight. After accomplishing the modification, inspect the modified tailboom at intervals not to exceed 1200 hours TIS in accordance with Part IV of the ASB.

(f) Modifying and inspecting the tailboom in accordance with paragraph (e) of this AD is terminating action for the requirements of paragraphs (a) through (d) of this AD.

(g) An alternative method of compliance or adjustment of the compliance time that provides an acceptable level of safety may be used if approved by the Manager, Regulations Group, Rotorcraft Directorate, FAA. Operators shall submit their requests through an FAA Principal Maintenance Inspector, who may concur or comment and then send it to the Manager, Regulations Group.

Note 2: Information concerning the existence of approved alternative methods of compliance with this AD, if any, may be obtained from the Regulations Group.

(h) Special flight permits may be issued for a one-time flight, not to exceed 5 hours TIS and a maximum of one landing in accordance with sections 21.197 and 21.199 of the Federal Aviation Regulations (14 CFR 21.197 and 21.199), to operate the helicopter to a location where the requirements of this AD can be accomplished. The visual preflight check required by paragraph (b) of this AD must be accomplished prior to making a one-time flight.

Note 3: The subject of this AD is addressed in Transport Canada (Canada) AD CF–98–42R3, dated February 17, 2000.

Issued in Fort Worth, Texas, on April 12, 2000.

Henry A. Armstrong,

Manager, Rotorcraft Directorate, Aircraft Certification Service.

[FR Doc. 00–9819 Filed 4–18–00; 8:45 am]

BILLING CODE 4910–13–U

DEPARTMENT OF TRANSPORTATION

Federal Aviation Administration

14 CFR Part 71

[Airspace Docket No. 00–ASO–9]

Proposed Amendment to Class D and Class E5 Airspace, Greenwood, MS

AGENCY: Federal Aviation Administration (FAA), DOT.

ACTION: Notice of proposed rulemaking.

SUMMARY: This action proposes to amend Class D and Class E airspace at Greenwood-Leflore Airport, Greenwood, MS. An Area Navigation (RNAV) Runway (RWY) 18 Standard Instrument Approach Procedure (SIAP) has been developed for Greenwood, MS. As a result, additional controlled airspace extending upward from the surface and extending upward from 700 feet above Ground Level (AGL) is needed to accommodate the SIAP.

DATES: Comments must be received on or before May 19, 2000.

ADDRESSES: Send comments on the proposal in triplicate to: Federal Aviation Administration, Docket No. 00–ASO–9, Manager, Airspace Branch, ASO–520, P.O. Box 20636, Atlanta, Georgia 30320.

The official docket may be examined in the Office of the Regional Counsel for Southern Region, Room 550, 1701 Columbia Avenue, College Park, Georgia 30337, telephone (404) 305–5586.

FOR FURTHER INFORMATION CONTACT: Nancy B. Shelton, Manager, Airspace Branch, Air Traffic Division, Federal Aviation Administration, P.O. Box 20636, Atlanta, Georgia 30320; telephone (404) 305–5586.

SUPPLEMENTARY INFORMATION:

Comments Invited

Interested parties are invited to participate in this proposed rulemaking by submitting such written data, views or arguments as they may desire. Comments that provide the factual basis supporting the views and suggestions presented are particularly helpful in developing reasoned regulatory decisions on the proposal. Comments are specifically invited on the overall regulatory, aeronautical, economic, environmental, and energy-related aspects of the proposal. Communications should identify the airspace docket and be submitted in triplicate to the address listed above. Commenters wishing the FAA to acknowledge receipt of their comments on this action must submit with those comments a self-addressed, stamped postcard on which the following statement is made: ''Comments to Airspace Docket No. 00–ASO–9.'' The postcard will be date/time stamped and returned to the commenter. All communications received before the specified closing date for comments will be considered before taking action on the proposed rule. The proposal contained in this action may be changed in light of the comments received. All comments submitted will be available for examination in the Office of the Regional Counsel for Southern Region, Room 550, 1701 Columbia Avenue, College Park, Georgia 30337, both before and after the closing date for comments. A report summarizing each substantive public contact with FAA personnel concerned with this rulemaking will be filed in the docket.

Availability of NPRMs

Any person may obtain a copy of this Notice of Proposed Rulemaking (NPRM) by submitting a request to the Federal Aviation Administration, Manager, Airspace Branch, ASO–520, Air Traffic Division, P.O. Box 20636, Atlanta, Georgia 30320. Communications must identify the docket number of this NPRM. Persons interested in being placed on a mailing list for future NPRMs should also request a copy of Advisory Circular No. 11–2A which describes the application procedure.

The Proposal

The FAA is considering an amendment to part 71 of the Federal Aviation Regulations (14 CFR part 71) to amend Class D and Class E5 airspace at Greenwood-Leflore Airport, Greenwood, MS. An RNAV RWY 18 SIAP has been developed for Greenwood-Leflore Airport. Additional controlled airspace extending upward from the surface and extending upward from 700 feet AGL is needed to accommodate the SIAP. Class D airspace designations are published in Paragraph 5000, Class E4 airspace designations are published in Paragraph 6004, and Class E5 airspace designations are published in Paragraph 6005 of FAA Order 7400.9G, dated September 1, 1999, and effective September 16, 1999, which is incorporated by reference in 14 CFR 71.1. The Class D and Class E5 airspace designations listed in this document would be published subsequently in the Order.

The FAA has determined that this proposed regulation only involves an established body of technical regulations for which frequent and routine amendments are necessary to keep them operationally current. It, therefore, (1) is not a ''significant