Federal Register

Wednesday,
October 18, 2000

Part IV

Architectural and Transportation Barriers Compliance Board

36 CFR Part 1191

Americans With Disabilities Act (ADA) Accessibility Guidelines for Buildings and Facilities; Play Areas; Final Rule

ARCHITECTURAL AND TRANSPORTATION BARRIERS COMPLIANCE BOARD

36 CFR Part 1191

[Docket No. 98–2]

RIN 3014–AA21

Americans With Disabilities Act (ADA) Accessibility Guidelines for Buildings and Facilities; Play Areas

AGENCY: Architectural and Transportation Barriers Compliance Board.

ACTION: Final rule.

SUMMARY: The Architectural and Transportation Barriers Compliance Board (Access Board) is issuing final accessibility guidelines to serve as the basis for standards to be adopted by the Department of Justice for new construction and alterations of play areas covered by the Americans with Disabilities Act (ADA). The guidelines include scoping and technical provisions for ground level and elevated play components, accessible routes, ramps and transfer systems, ground surfaces, and soft contained play structures. The guidelines will ensure that newly constructed and altered play areas meet the requirements of the ADA and are readily accessible to and usable by individuals with disabilities. The Department of Justice must adopt the guidelines as standards for them to be enforceable under the ADA.

DATES: The guidelines are effective November 17, 2000. The incorporation by reference of certain publications listed in the guidelines is approved by the Director of the Federal Register as of November 17, 2000.

FOR FURTHER INFORMATION CONTACT: Peggy Greenwell, Office of Technical and Information Services, Architectural and Transportation Barriers Compliance Board, 1331 F Street, NW., suite 1000, Washington, DC 20004–1111. Telephone number (202) 272–5434 extension 134 (Voice); (202) 272–5449 (TTY). E-mail address: greenwell@access-board.gov.

SUPPLEMENTARY INFORMATION:

Availability of Copies and Electronic Access

Single copies of this publication may be obtained at no cost by calling the Access Board's automated publications order line (202) 272–5434, by pressing 2 on the telephone keypad, then 1, and requesting publication S–39 (Play Areas Final Rule). Persons using a TTY should call (202) 272–5449. Please record a name, address, telephone number and request publication S–39. This document is available in alternate formats upon request. Persons who want a copy in an alternate format should specify the type of format (cassette tape, Braille, large print, or ASCII disk). This document is also available on the Board's Internet site (http://www.access-board.gov/play/finalrule.htm).

Background

The Americans with Disabilities Act is a comprehensive civil rights law which prohibits discrimination on the basis of disability.[1] Titles II and III of the ADA require, among other things, that newly constructed and altered State and local government facilities, places of public accommodation, and commercial facilities be readily accessible to and usable by individuals with disabilities. Recreation facilities, including play areas, are among the types of facilities covered by titles II and III of the ADA.

The Architectural and Transportation Barriers Compliance Board (Access Board) is responsible for developing accessibility guidelines to ensure that new construction and alterations of facilities covered by titles II and III of the ADA are readily accessible to and usable by individuals with disabilities.[2] The Access Board initially issued the Americans with Disabilities Act Accessibility Guidelines (ADAAG) in 1991.[3] ADAAG contains general scoping and technical provisions (ADAAG 1 to 4) that apply to all types of facilities, and special application sections (ADAAG 5 to 12) that include additional scoping and technical provisions for certain types of facilities.[4] The technical provisions are generally based on adult dimensions and anthropometrics. In 1998, ADAAG was amended to include technical provisions based on children dimensions and anthropometrics for building elements designed specifically for children ages 12 and younger.[5]

The Department of Justice is responsible for issuing regulations to implement titles II and III of the ADA. The regulations issued by the Department of Justice must include accessibility standards for newly constructed and altered facilities covered by titles II and III of the ADA. The standards must be consistent with the accessibility guidelines issued by the Access Board. The Department of Justice has adopted ADAAG as the Standard for Accessible Design for title III of the ADA.[6]

This final rule amends ADAAG by adding a new special application section for play areas (ADAAG 15.6) that includes scoping and technical provisions for ground level and elevated play components, accessible routes, ramps and transfer systems, ground surfaces, and soft contained play structures.[7] The Access Board published a notice of proposed rulemaking (NPRM) on the play area guidelines in the **Federal Register** in April 1998.[8] The NPRM describes the full history of the rulemaking. The play area guidelines were developed through regulatory negotiation, a supplement to the traditional rulemaking process that allows face-to-face negotiations among representatives of affected interests in order to achieve consensus on the text of a proposed rule. The regulatory

[1] See 42 U.S.C. 12101 *et seq.* (http://www.usdoj.gov/crt/ada/pubs/ada.txt).

[2] The Access Board is an independent Federal agency established by section 502 of the Rehabilitation Act whose primary mission is to promote accessibility for individuals with disabilities. The Access Board consists of 25 members. Thirteen are appointed by the President from among the public, a majority of who are required to be individuals with disabilities. The other twelve are heads of the following Federal agencies or their designees whose positions are Executive Level IV or above: The departments of Health and Human Services, Education, Transportation, Housing and Urban Development, Labor, Interior, Defense, Justice, Veterans Affairs, and Commerce; General Services Administration; and United States Postal Service.

[3] See 36 CFR part 1191, Appendix A (http://www.access-board.gov/adaag/html/adaag.htm).

[4] The special application sections cover the following facilities: restaurants and cafeterias (ADAAG 5); medical care facilities (ADAAG 6); business, mercantile and civic (ADAAG 7); libraries (ADAAG 8); transient lodging (ADAAG 9); transportation facilities (ADAAG 10); judicial, legislative, and regulatory facilities (ADAAG 11); and detention and correctional facilities (ADAAG 12). ADAAG 13 is reserved for housing and ADAAG 14 is reserved for public rights-of-way.

[5] See 63 FR 2060 (January 13, 1998) (http://access-board.gov/adaag/kids/child/htm).

[6] See 28 CFR part 36, Appendix A (http://www.usdoj.gov/crt/ada/reg3a.html). The Department of Justice standards currently include ADAAG 1 to 10. State and local governments currently have the option of using ADAAG or an earlier standard, the Uniform Federal Accessibility Standards (UFAS), when constructing or altering facilities under the Department of Justice regulations for title II of the ADA. See 28 CFR 35.151(c) (http://www.usdoj.gov/crt/ada/reg2/html). The Department of Justice has issued a notice of proposed rulemaking to eliminate this option. 59 FR 31808 (June 20, 1994).

[7] In the NPRM, the play area guidelines were proposed to be a separate special application section numbered ADAAG 16. In the final rule, the play area guidelines are included in the special application section reserved for recreation facilities and are numbered ADAAG 15.6. ADAAG 15 eventually will include scoping and technical provisions for other recreation facilities, including amusement rides, boating and fishing facilities, golf, miniature golf, sports facilities, and swimming pools. The Access Board published a notice of proposed rulemaking (NPRM) on these recreation facility guidelines in the **Federal Register** in July 1999. See 64 FR 37326 (July 9, 1999) (http://www.access-board.gov/recreation/recnprm.htm).

[8] See 63 FR 24080 (April 30, 1998) (http://www.access-board.gov/play/nprm.htm).

negotiation committee represented a variety of interests, including play equipment manufacturers, landscape architects, parks and recreation facilities, city and county governments, schools, child care facilities, and people with disabilities.[9] The regulatory negotiation committee conducted meetings in various cities across the country and sought public participation throughout the process. The regulatory negotiation committee reached consensus on proposed guidelines for play areas and public comment was sought on the proposed guidelines through the NPRM. The Access Board held a public hearing in Denver, Colorado during the comment period. Approximately 100 comments were received on the NPRM.

The Department of Justice must adopt the play area guidelines as standards for them to be enforceable under the ADA.

General Issues

General issues pertaining to the application of the play area guidelines are discussed below. The specific provisions of the guidelines are discussed under the Section-by-Section Analysis.

Child Care Facilities

Comment. The National Child Care Association (NCCA) questioned the estimated cost impact of the play area guidelines on child care facilities. NCCA claimed that the cost would be prohibitive for child care facilities. Child care providers who testified at the public hearing in Denver reiterated NCCA's concerns and noted that the guidelines would have the greatest impact on family child care providers. NCCA requested that carrying and lifting children on play areas be permitted as ''alternative accessibility'' or ''equivalent facilitation,'' or that play areas in child care facilities for children ages 5 and under be exempted from the guidelines.

Response. NCCA was a member of the regulatory negotiation committee that reached consensus on the play area guidelines. The regulatory negotiation committee discussed various issues associated with play areas within child care facilities at great length. The regulatory negotiation committee limited application of the guidelines to play areas designed and constructed for children ages two and over. The regulatory negotiation committee also included provisions in the guidelines to address concerns related to smaller facilities, including child care facilities. For example, transfer systems are permitted instead of ramps to provide access to composite play structures with less than 20 elevated play components. Accessible routes at ground level are permitted to be 44 inches minimum wide, instead of 60 inches minimum wide, in play areas with less than 1,000 square feet. These provisions lessen the cost impact of the guidelines on smaller facilities.

For the NPRM, it was estimated that there would be no cost impact on child care facilities. This estimate was based on several assumptions. First, it was assumed that all child care facilities would have small play areas. The economic assessment for the NPRM used a model of a small play area to represent play areas typically found in child care facilities. The model included two separate play areas totaling 920 square feet: one for infants and toddlers under age two, which is not covered by the guidelines; and one for pre-school children ages two through five, which is covered by the guidelines.[10] The play area for the pre-school children included a composite play structure with 4 elevated play components on a single deck, 4 ground level play components, and a moveable play activity. The economic assessment assumed that, in the absence of the guidelines, if such a play area was designed and constructed in the future, it would have a transfer platform and steps that would make the composite play structure accessible.[11] Thus, the guidelines would not have any cost impact on the composite play structure. The economic assessment also assumed that, in the absence of the guidelines, the play area would have a ground surface of engineered wood fiber, or a combination of rubber and loose fill materials that would provide an adequate accessible route to the composite play structure and to a sufficient number of ground level play components. Thus, the guidelines would not have any cost impact on the ground surface.

NCCA claimed that play areas in child care facilities are much larger than the model used in the economic assessment because most States require child care facilities to provide more than 1,000 square feet of play space. The Access Board has reviewed each State's licensing requirements for child care facilities. About two-thirds of the States require that a minimum of 50 square feet to 75 square feet of play space be provided for each child.[12] However, the State requirements are expressed generally in terms of ''play space,'' not ''playgrounds.'' The Access Board contacted over 125 child care facilities around the country and found that most of their playgrounds have 4 to 7 play components (the average number of play components was 4.7 components). Furthermore, all the children enrolled in a child care facility do not use the playground at the same time, but rather the children use the playground in smaller groups. Play area equipment catalogues show designs similar to the model used in the economic assessment for pre-school children. This additional information supports the assumption made in the economic assessment regarding the size of play areas and number of play components in child care facilities.[13]

Based on comments from child care facilities, the assumption made in the economic assessment for the NPRM regarding the type of ground surface materials used for play areas in child care facilities has been changed. For the final rule, the economic assessment assumes that, in the absence of the guidelines, the ground surface material will be a loose fill such as sand or wood chips. The cost difference between using loose fill and engineered wood fiber is $300 to $950, and the cost difference between using loose fill and a combination of rubber and loose fill is $946 to $2,215. When maintenance costs for the various ground surface materials are factored in, the cost difference over a fifteen year life cycle

[9] The following organizations were represented on the regulatory negotiation committee: American Society of Landscape Architects, ASTM Public Playground Subcommittee F15.29, ASTM Soft Contained Play Subcommittee F15.36, ASTM Playground Surfacing Systems Subcommittee F08.63, International Play Equipment Manufacturers Association, National Association of Counties, National Association of Elementary School Principals, National Child Care Association, National Council on Independent Living, National Easter Seal Society, National League of Cities, National Parent-Teacher Association, National Recreation and Park Association, Spinal Bifida Association of America, TASH, United Cerebral Palsy Associations, and U.S. Access Board.

[10] The U.S. Consumer Product Safety Commission recommends that for younger children, playgrounds have separate areas with appropriately sized equipment and materials to serve their developmental levels. See Handbook for Public Playground Safety p. 8 (http://cpsc.gov/cpscpub/pubs/325.pdf).

[11] The factors on which this assumption is based are discussed later in this preamble under Regulatory Process Matters, Executive Order 12866: Regulatory Planning and Review, Baseline.

[12] According to NCCA, the average licensed capacity for child care facilities is 70 children. At 50 square feet to 75 square feet minimum per child, the average child care facility would have a minimum of 3,500 square feet to 5,250 square feet of play space.

[13] For the final rule, the economic assessment estimates that there are 102,458 licensed child care facilities, and that 80 percent to 100 percent of these facilities have play areas. The economic assessment assumes the following size distribution of play areas among child care facilities: 60 percent small, 30 percent medium, and 10 percent large.

range from a cost savings of $190 to a cost increase of $460 for engineered wood fiber, and from a cost savings of $260 to a cost increase of $1,000 for a combination of rubber and loose fill. These cost savings or cost increases are not prohibitive. Additionally, small businesses that have revenues of $1 million or less, or 30 or fewer full-time workers are entitled to a 50 percent tax credit for expenses to remove architectural barriers in their facilities, up to a maximum expenditure of $10,250; and a tax deduction of $15,000 a year is also available for architectural barrier removal, regardless of business size.[14] Child care facilities that remove architectural barriers in their existing play areas by replacing loose fill with accessible ground surfaces and by providing ramps and transfer systems to composite play structures may use the tax credit and tax deduction in combination. In addition, federal funds are available through the Community Development Block Grant Program to remove architectural barriers in existing facilities.[15] State and local governments may use these funds to remove architectural barriers in existing play areas in publicly operated and privately operated child care facilities.

It has been a long standing interpretation of civil rights laws for individuals with disabilities that carrying and lifting are ineffective and unacceptable methods for providing accessibility, and thus NCCA's request in this regard cannot be accepted.[16] Challenge and skill development are both a part of the play experience, and children with disabilities are capable of enjoying this experience.

An exception has been added to the final rule that exempts family child care facilities where the proprietor actually resides from the play area guidelines. These family child care facilities are located in private homes. State licensing requirements generally set a maximum capacity of 12 children for these home based child care facilities and they usually care for a smaller number of children. There are important differences, besides size, between home based child care facilities and center based child care facilities. Center based child care facilities typically purchase public playground equipment costing an average of $7,000, for which accessible products are available. Family child care facilities on the other hand typically purchase home playground equipment costing from $100 for a simple swing set to $1,000 for more elaborate systems, for which accessible products may not be readily available. Family child care facilities place the playground equipment in the front or back yards of their homes, which typically consist of grass or dirt and may not provide the types of ground surfaces used at public playgrounds. The cost of providing ground surfaces complying with the play area guidelines could far exceed the cost of purchasing home playground equipment and result in the home owner deciding not to provide any playground equipment or to purchase moveable playground equipment, which would not be covered by the guidelines.

Family child care facilities must still comply with all the other requirements of the ADA, including the general obligation to provide equal opportunity to individuals with disabilities to enjoy the services of their facilities and to remove architectural barriers in existing facilities where it is readily achievable (*i.e.,* easily accomplishable and able to be carried out without much difficulty or expense).[17]

Amusement Attractions

Comment. The International Association of Amusement Parks and Attractions (IAAPA) requested that amusement attractions and amusement rides be exempt from the play area guidelines.

Response. An exception has been added to the final rule that exempts amusement attractions located in amusement parks and theme parks from the play area guidelines, except the provisions for soft contained play structures. The exception is limited and applies to amusement attractions such as fun houses and barrels. If an amusement park or theme park has an eating place or picnic area that provides commonly used playground equipment, the playground equipment is not considered an amusement attraction and must comply with the play area guidelines.

Amusement attractions are not exempt from the other provisions of ADAAG. For example, assembly areas with fixed seats where entertainment is provided must provide wheelchair seating spaces complying with ADAAG 4.33 (Assembly Areas). Amusement attractions which have unique designs and features that are not adequately addressed by ADAAG must comply with ADAAG to the extent possible. Where ADAAG cannot be fully applied to amusement attractions, operators of amusement parks and theme parks are still subject to all the other requirements of the ADA, including the general obligation to provide individuals with disabilities an equal opportunity to enjoy the goods and services provided by their facilities.

The play area guidelines do not apply to amusement rides. The NPRM on recreation facilities proposed to add scoping and technical provisions to ADAAG for amusement rides.[18]

Comment. IAAPA also claimed that the play area guidelines conflict with a Department of Justice regulation for title III of the ADA, which provides that public accommodations are not required to alter their inventory to include accessible or special goods that are designed for individuals with disabilities, such as books in alternate formats (*e.g.,* Braille or audio tape), closed-captioned videotapes, specially sized or designed clothing, and special foods to meet particular dietary needs.[19]

Response. The Department of Justice regulation referenced by IAAPA applies to retail merchandise sold by public accommodations, and not to the design, construction, or alteration of facilities. Amusement rides are not retail merchandise. The regulation does not limit the other requirements of the ADA, including the requirement that new construction and alterations of facilities be readily accessible to and usable by individuals with disabilities.

Water Play Components

Comment. Commenters requested that the play area guidelines address water play components. Water play components incorporate water into the play experience. Water play components may be stand alone or part of a composite structure, and may be located in shallow water or pools.

Response. With regard to water play components located in shallow water or pools, the NPRM on recreation facilities requested additional information on

[14] See Tax Incentives Packet on the ADA (http://www.usdoj.gov/crt/ada/taxpack.htm).

[15] See 42 U.S.C. 5305(a)(5). The U.S. Department of Housing and Urban Development reports that local governments spent over $40 million of Community Development Block Grant funds on architectural barrier removal projects in fiscal year 1999.

[16] See Appendix A to 28 CFR 35.150(b)(1) (http://www.usdoj.gov/crt/ada/reg2.html). See also *Rameriez* v. *District of Columbia,* No. 99–803 (TFH) (D.D.C. March 27, 2000) where the court decided that assigning an aide to carry a child with cerebral palsy into an inaccessible restroom in a public school violates the ADA.

[17] See 28 CFR 36.201, 36.207 and 36.304 (http://www.usdoj.gov/crt/ada/reg3a.html). For additional guidance, see Commonly Asked Questions About Child Care Centers and the Americans with Disabilities Act (http://www.usdoj.gov/crt/ada/childq%26a.html).

[18] See note 7, *supra.*

[19] See 28 CFR 36.307 (http://www.usdoj.gov/crt/ada/reg3a/html).

those water play components.[20] Water play components located in shallow water or pools will be addressed in the final rule on recreation facilities.

With regard to water play components not located in shallow water or pools, the play area guidelines apply to these water play components. Where these water play components are located at the ground level, the provisions for ground level play components apply, including locating one of each type on an accessible route. Where these water play components are elevated, the provisions for elevated play components apply.

Unique Play Areas

Comment. Commenters requested clarification regarding application of the guidelines to play areas with unique designs and features. They provided examples of children's gardens, challenge courses, rock climbing walls, and tree houses. A manufacturer of interactive play systems claimed that the scoping and technical provisions were not appropriate for its play areas.

Response. A play area is a portion of a site containing play components designed and constructed for children. Play components are defined broadly to include elements intended to generate specific opportunities for play, socialization, or learning. Play components may be manufactured or natural. The scoping and technical provisions of the play area guidelines were developed to address commonly used playground equipment and structures. There will be play areas that have unique designs and features which are not adequately addressed by the guidelines. In those situations, the play area guidelines and the rest of ADAAG are to be applied to the extent possible. An accessible route must be provided to the play area. Where there are multiple play components, the scoping provisions for ground level and elevated play components are to be used to determine how many play components must be located on an accessible route. Where a play area has unique features for which there are no applicable scoping provisions, then a reasonable number, but at least one, of the features must be located on an accessible route. Where there are appropriate technical provisions, they must be applied to the elements that are covered by the scoping provisions. Where a play area has unique designs for which the technical provisions are not appropriate, the operators of those play areas are still subject to all the other requirements of the ADA, including the general obligation to provide individuals with disabilities an equal opportunity to enjoy the goods and services provided by their facilities.[21]

Interactive play systems include a wide variety of structures. Some are similar to commonly used playground equipment and soft contained play structures, and can comply with applicable provisions of the play area guidelines. Others include water play components located in shallow water or pools. As discussed above, water play components located in shallow water or pools will be addressed in the final rule on recreation facilities. Still others are multi-level indoor structures that are supervised. Platform lifts may provide an appropriate design solution to provide access to those structures.

Alterations and Additions

Comment. Commenters requested clarification regarding how the play area guidelines apply to alterations, especially where play components are replaced in existing play areas and the existing ground surface is not accessible.

Response. ADAAG 4.1.6 (Accessible Buildings: Alterations) contains general scoping provisions relating to alterations. ADAAG 4.1.6(1)(b) provides that when an existing element or space is altered, the altered element or space must comply with the applicable provisions for new construction. If it is technically infeasible for the altered element or space to fully comply with the applicable new construction provisions, ADAAG 4.1.6(j) requires that the alterations provide for accessibility to the maximum extent feasible.

ADAAG 4.1.6(1)(b) also provides that when the applicable provisions for new construction require that an element or space be located on an accessible route, the altered element or space is not required to be located on an accessible route, unless required by ADAAG 4.1.6(2) (Alterations to an Area Containing a Primary Function). ADAAG 4.1.6(2) provides that, when an area containing a primary function is altered, an accessible path of travel must be provided to the altered area unless the cost and scope of alterations to provide an accessible path of travel is disproportionate to the overall alterations as determined under criteria established by the Department of Justice. The Department of Justice regulations for title III of the ADA deem alterations to provide an accessible path of travel disproportionate when the cost exceeds 20 percent of the cost of the overall alterations.[22]

When play areas are altered, the provisions of ADAAG 4.1.6 apply. For example, the swings are replaced in an existing play area that has a sand ground surface. The sand does not have to be replaced with an accessible surface to provide an accessible path of travel to the swings if the cost of altering the ground surface exceeds 20 percent of the cost of replacing the swings. An exception has been added to the final rule to clarify the application of ADAAG 4.1.6 to this situation. The exception is limited to alterations where the play components are altered, but the ground surface is not altered. An accessible ground surface does not have to be provided, unless required by ADAAG 4.1.6(2) (*i.e.,* the ground surface does not have to be altered if the cost exceeds 20 percent of the cost of replacing the play components). The exception exempts operators from having to provide an accessible ground surface not only for accessible routes, but also for clear floor or ground spaces and maneuvering spaces adjacent to the altered play components since it would not be practical to provide discrete spaces of accessible ground surfacing without connecting the spaces with an accessible route.[23]

Normal maintenance activities performed on play areas such as replacing worn ropes or topping off ground surfaces are not considered alterations. However, if the entire ground surface is replaced, the ground surface must comply with the play areas guidelines and provide an accessible route to the required number and types of ground level play components and

[20] See note 7, *supra.*

[21] For additional guidance, see II–6.2100 of the Department of Justice ADA Title II Technical Assistance Manual Supplement (http://www.usdoj.gov/crt/ada/taman2up.html) and III–5.3000 of the Department of Justice ADA Title III Technical Assistance Manual (http://www.usdoj.gov/crt/ada/taman3.html)

[22] See 28 CFR 36.403(f)(1) (http://www.usdoj.gov/crt/ada/reg3a.html).

[23] State and local governments who operate play areas have a separate obligation under title II of the ADA to provide program accessibility which may require the removal of architectural barriers in existing facilities. See 28 CFR 35.150 (http://www.usdoj.gov/crt/ada/reg2.html).

Private entities who operate play areas have a separate obligation under title III of the ADA to remove architectural barriers in existing facilities where it is readily achievable (*i.e.,* easily accomplishable and able to be carried out without much difficulty or expense). See 28 CFR 36.304 (http://www.usdoj.gov/crt/ada/reg3a.html).

Tax credits and deductions are available to private entities for architectural barrier removal in existing facilities. See note 14, *supra.* Federal funds also are available through the Community Development Block Grant Program to remove architectural barriers in existing facilities. See note 15, *supra.* State and local governments may use Community Development Block Grant funds to remove architectural barriers in publicly and privately operated facilities.

composite play structures. Replacing the entire ground surface would not require an additional number or types of ground level play components to be added, if there was not a sufficient number or types provided to comply with the guidelines prior to the alterations, nor would it require alterations to composite play structures that were not otherwise planned.

Comment. Commenters also requested clarification regarding how the guidelines apply to play areas designed and constructed in phases over several years.

Response. A provision has been added to the final rule to clarify that where play areas are designed and constructed in phases, the guidelines are to be applied so that when each successive addition is completed, the entire play area complies with all applicable provisions of the guidelines. For example, a play area is built in two phases. In the first phase, there are 10 elevated play components; and 10 elevated play components are added in the second phase for a total of 20 elevated play components. When the first phase is completed, at least 5 elevated play components must be located on an accessible route, and at least 3 ground level play components, including at least 3 different types, must be provided on an accessible route. When the second phase is completed, at least 10 elevated play components must be located on an accessible route, and at least 7 ground level play components, including 4 different types, must be provided on an accessible route. Ramps must be used to connect at least 5 of the elevated play components and transfer systems are permitted to be used to connect the rest of the elevated play components required to be located on an accessible route.

Where ground level play components are added in phases, the additional ground level play components do not have to be located on an accessible route if at least one of each type requirement is met and a sufficient number and types of ground level play components are provided on an accessible route based on the number of elevated play components. For example, a newly constructed play area has two spring rockers and one of the spring rockers is located on an accessible route. Two more spring rockers are later added to the play area. An accessible route is not required to connect to the additional spring rockers, provided that a sufficient number and types of ground level play components are provided on an accessible route based on the number of elevated play components.

Section-by-Section Analysis

The specific provisions of the play area guidelines and the comments received on each provision are discussed below.

3.5 Definitions

Definitions are added to ADAAG 3.5 (Definitions) for the following terms used in the play area guidelines: amusement attraction, elevated play component, ground level play component, play area, play component, soft contained play structure, and use zone. Several of the definitions are revised in the final rule for clarity.

Comment. Commenters questioned the reference to the ASTM F 1487–95 standard in the definition of ''play area'' in the NPRM. The ASTM standard is a voluntary safety standard for public playground equipment. Commenters questioned whether the play area guidelines would apply if a play area was not designed and constructed in accordance with the ASTM standard.

Response. The reference to the ASTM F 1487–95 standard has been removed from the definition of ''play area'' in the final rule.

Comment. Designers and operators requested clarification of the definition of ''play component'' and how to distinguish between ground level and elevated play components.

Response. The definition of ''elevated play component'' has been modified in the final rule to include the definition of a composite play structure. Appendix notes (A15.6.2 and A15.6.3) have been added to provide guidance on how to distinguish between ground level and elevated play components.

15.6 Play Areas

In the NPRM, the play area guidelines were proposed to be a separate special application section numbered ADAAG 16. In the final rule, the play area guidelines are included in the special application section reserved for recreation facilities and are numbered ADAAG 15.6.[24] The guidelines have been edited and reorganized for clarity. Appendix notes have been added to provide guidance on the guidelines. The appendix notes are advisory only.

15.6.1 General

The play area guidelines apply to play areas designed and constructed for children ages two and over. Where separate play areas are provided within a site for specified age groups (e.g., preschool (ages 2 to 5) and school age (ages 5 to 12)), each play area must comply with the guidelines. Where play areas are designed or constructed in phases, the guidelines are to be applied so that when each successive addition is completed, the entire play area complies with all the applicable provisions of the guidelines.

Comment. Commenters requested clarification regarding how to apply the guidelines where separate play areas are provided within a site for different age groups.

Response. As noted above, the section has been revised in the final rule to clarify that each play area within a site provided for specified age groups must comply with the guidelines.

Comment. Commenters representing children with disabilities were concerned that the guidelines do not apply to play areas for children under age two.

Response. There is not sufficient information to develop guidelines for play areas for children under age two. Although there are no guidelines for play areas for children under age two, operators of those play areas are subject to all the other requirements of the ADA, including the obligation to provide individuals with disabilities an equal opportunity to enjoy the goods and services provided by their facilities.

15.6.1 Exception 1

Exception 1 is further discussed under General Issues. The exception exempts play areas located in family child care facilities where the proprietor actually resides from the play area guidelines. Family child care facilities must still comply with all the other requirements of the ADA, including the general obligation to provide equal opportunity to individuals with disabilities to enjoy the services of their facilities and to remove architectural barriers in existing facilities where it is readily achievable (i.e., easily accomplishable and able to be carried out without much difficulty or expense).[25]

15.6.1 Exception 2

Exception 2 permits operators to relocate play components in existing play areas for the purpose of creating safe use zones. Where the ground surface is not changed or extended for more than one use zone, the guidelines do not apply.

Comment. A commenter questioned whether this exception applies when more than one play component is moved. To create safe use zones, usually more than one play component must be moved.

[24] See note 7, *supra.*

[25] See note 21, *supra.*

Response. Exception 2 applies regardless of the number of play components moved, provided that the surface is not changed or extended for more than one use zone for each play component moved.

15.6.1 Exception 3

Exception 3 is further discussed under General Issues. The exception provides that where play components are altered and the ground surface is not altered, the ground surface is not required to comply with the guidelines, unless required by ADAAG 4.1.6(2) (Alterations to an Area Containing a Primary Function).

15.6.1 Exception 4

Exception 4 is further discussed under General Issues. The exception exempts amusement attractions in amusement parks and theme parks from the play area guidelines, except the provisions for soft contained play structures. The exception is limited and applies to amusement attractions such as fun houses and barrels. If an amusement park or theme park has an eating place or picnic area that provides commonly used playground equipment, the playground equipment is not considered an amusement attraction and must comply with 15.6. Amusement attractions are not exempt from the other provisions of ADAAG. Operators of amusement parks and theme parks are still subject to the other requirements of the ADA, including the general obligation to provide individuals with disabilities an equal opportunity to enjoy the goods and services provided by their facilities.

15.6.1 Exception 5

Exception 5 exempts play areas from complying with the provisions for protruding objects in ADAAG 4.4 (Protruding Objects). ADAAG 4.4 generally prohibits protrusions along circulation paths from projecting more than 4 inches, if the leading edge is above 27 inches and below 80 inches. ADAAG 4.4 also requires a minimum head clearance of 80 inches. No comments were received on this exception.

15.6.1 Exception 6

Exception 6 has been added to the final rule in response to comments from manufacturers who requested clarification regarding whether ADAAG 4.9 (Stairs) applies to composite play structures. The exception provides that stairs are not required to comply with ADAAG 4.9 since ramps and transfer systems are used to provide access to elevated play components. The exception also eliminates any potential conflicts between the technical provisions for stairs and transfer systems.

15.6.2 Ground Level Play Components

This section contains the scoping provisions for ground level play components. Ground level play components provided to comply with 15.6.2.1 are permitted to satisfy the number required by 15.6.2.2, if the minimum required types of play components are provided. Where more than one ground level play component is required by 15.6.2.1 and 15.6.2.2, the play components must be integrated in the play area.

Comment. A parent of a child with a hearing impairment who has a cochlear implant commented that some play equipment materials such as plastic slides generate static electricity when children move across the surfaces. The static electricity can damage cochlear implants and result in the need to replace them surgically. The commenter recommended that 50 percent of play components be metal.

Response. Consistent with the rest of ADAAG, the play area guidelines do not specify the materials to be used in play components. Designers and operators specify materials giving consideration to maintenance, climate, use, cost, and other factors. Manufacturers often add substances to plastics to reduce static electricity. The additives may lose their effectiveness over time in the outdoor environment or compromise the strength of the plastic. The type of clothing worn by a child and the humidity also may affect whether static electricity is generated by plastics. Some operators specify stainless steel slides to prevent or reduce vandalism. However, stainless steel slides are not widely used in warmer climates due to the potential for skin burns.

Comment. Commenters requested clarification regarding how to apply the provision that ground level play components required by 15.6.2.1 and 15.6.2.2 must be integrated. They provided examples where passive play components, such as activity panels, are separated from more active play components, such as swings, to ensure safety, and asked whether this type of separation would be considered integrated.

Response. The intent of this provision is to ensure that ground level play components which can be accessed by children with disabilities are integrated with other ground level play components. Grouping all ground level play components that can be accessed by children with disabilities in one part of the play area would not be considered integrated. Where certain types of ground level play components are separated for safe use, the integration provision can still be met. For example, if one part of the play area has activity panels and another part has swings, as long as an accessible route connects to both parts of the play area and at least one activity panel and at least one swing is located on the accessible route, the ground level play components would be integrated.

15.6.2.1 General

This section requires that at least one of each type of ground level play component provided must be located on an accessible route complying with 15.6.4 and must also comply with 15.6.6.

Comment. Designers and operators requested clarification regarding distinguishing between the types of ground level play components provided. For example, they asked whether a straight slide would be considered the same type of play component as a spiral slide. Commenters representing children with disabilities emphasized the need to ensure diversity or variety of play experiences for children with disabilities.

Response. An appendix note (A15.6.2) has been added to provide guidance on how to distinguish between the types of ground level play components provided. The general experience provided by the play component will distinguish between the types of play components provided. Examples of different types of experiences include rocking, swinging, climbing, spinning, and sliding. A spiral slide may provide a slightly different experience from a straight slide, but sliding is the general experience and therefore a spiral slide would not be considered a different type of play component than a straight slide.

15.6.2.2 Additional Number and Types

This section requires that, where elevated play components are provided, additional ground level play components must be provided. The additional ground level play components must be located on an accessible route complying with 15.6.4 and must also comply with 15.6.6.

Comment. The NPRM proposed that the additional number of ground level play components be equal to at least 50 percent of the total number of elevated play components. Commenters considered this number excessive.

Response. The regulatory negotiation committee proposed this provision in order to provide additional play opportunities for children with

disabilities at the ground level since only a minimum of 50 percent of elevated play components would be connected by ramps or transfer systems. The regulatory negotiation committee also was concerned that some children with disabilities would be unable to or would choose not to use transfer systems to access elevated play components and wanted to provide additional play opportunities at the ground level for those children. The provision has a significant cost impact on play areas due to the cost of providing the additional ground level play components and, depending on the surface material used, the cost of providing an accessible route to the additional ground level play components.

The provision has been modified in the final rule. Table 15.6.2.2 has been added to the final rule which requires that ground level play components complying with the guidelines be provided in a number equal to at least approximately one-third of the total number of elevated play components. The table also requires that the additional ground level play components include different types of play experiences. The table reduces the cost impact on play areas and ensures that there will be a diversity or variety of play opportunities for children with disabilities at the ground level.

15.6.2.2 Exception

This exception has been modified in the final rule. The exception exempts play areas from having to provide the additional number and types of ground level play components required by 15.6.2.2 if at least 50 percent of the elevated play components are connected by a ramp and at least 3 of the elevated play components connected by the ramp are different types of play components.

Comment. The NPRM proposed to exempt play areas from having to provide additional ground level play components if all the elevated play components are connected by a ramp. Designers and operators commented that the proposed exception was too stringent.

Response. The exception has been modified in the final rule as discussed above. The exception is intended to encourage designers and operators to connect the number of elevated play components required by 15.6.3 with ramps instead of transfer systems because ramps are the preferred means of access for many children with disabilities.

15.6.3 Elevated Play Components

This section requires that at least 50 percent of elevated play components must be located on an accessible route complying with 15.6.4. Elevated play components connected by a ramp must comply with 15.6.6.

Comment. Commenters representing children with disabilities expressed concern that the guidelines do not require elevated play components located on an accessible route to be dispersed or located on different parts of a composite play structure.

Response. Dispersion is not specifically required because requiring at least 50 percent of elevated play components to be located on an accessible route should provide for an adequate level of dispersion.

15.6.4 Accessible Routes

This section requires that at least one accessible route complying with ADAAG 4.3 (Accessible Route), as modified by 15.6.4, be provided.

Comment. Designers expressed concern that the technical provisions for accessible routes would restrict creativity and innovation in the design of challenging play areas.

Response. The technical provisions for accessible routes provide minimum criteria for designers to make play areas accessible to children with disabilities. Consideration should be given to the general layout of the play area, and specifically to integrating elements and spaces that can be accessed by children with disabilities within the area. Designers are not prohibited from providing other circulation paths and spaces that do not conform to the guidelines, if an accessible route is provided. ADAAG 2.2 (Equivalent Facilitation) also allows for departure from specific technical provisions where designs may provide substantially equivalent or greater access.

15.6.4 Exception 1

Exception 1 permits a transfer system to connect elevated play components, except where 20 or more elevated play components are provided, no more than 25 percent of the elevated play components are permitted to be connected by a transfer system. The rest of the elevated play components required to be located on an accessible route must be connected by a ramp.

Comment. Some operators and manufacturers requested that the use of transfer systems not be limited based on the number of elevated play components provided. Some commenters representing children with disabilities requested that transfer systems not be permitted at all.

Response. The exception has not been modified in the final rule. The regulatory negotiation committee extensively discussed the issue of when ramps should be required to connect elevated play components. The regulatory negotiation committee considered the cost of ramps in relation to the size of composite play structures, and the potential that ramps might have a negative impact on play value or on the number of play components provided. Although ramps are preferred over transfer systems, transfer systems are usable by some children with disabilities.

Comment. Commenters requested clarification regarding how the number of elevated play components would be counted. They asked whether a double or triple slide that is part of a composite play structure would be counted as one elevated play component or more than one elevated play component.

Response. An appendix note (A15.6.3) has been added to clarify that a double or triple slide is considered one elevated play component.

15.6.4 Exception 2

Exception 2 permits an elevated play component to connect to another elevated play component in lieu of an accessible route where a transfer system is provided. No comments were received on this exception.

15.6.4 Exception 3

Exception 3 permits platform lifts complying with ADAAG 4.11 (Platform Lifts—Wheelchair Lifts) and applicable State or local codes to be used as part of an accessible route.

Comment. Operators considered platform lifts hazardous and difficult to maintain since they must be independently usable.

Response. The exception has been retained in the final rule. The exception allows operators the discretion to decide whether a platform lift is appropriate for a specific play area after giving due consideration to the location, level of supervision provided, and other relevant factors.

15.6.4.1 Location

This section provides that accessible routes must be located within the boundary of the play area and must connect ground level play components required by 15.6.2.1 and 15.6.2.2, and elevated play components required by 15.6.3, including their entry and exit points.

Comment. Commenters questioned why accessible routes must connect

stairs and exit points at stand alone slides. They maintained that accessible routes at these locations have limited utility because children with disabilities cannot often climb stairs or transfer independently from exit points of slides.

Response. This provision is intended to provide children with disabilities a circulation path to a variety of play components without affecting the challenge incorporated in play areas. Some children with disabilities, especially those who use mobility devices that assist in walking or standing, will benefit from an accessible route connecting play components, including stand alone slides. Others may not be able to use certain play components independently, but may enjoy the experience with assistance. An accessible route at exit points allows children with disabilities to negotiate through an accessible surface and to return to mobility devices with dignity.

15.6.4.2 Protrusions

This section prohibits objects from protruding into accessible routes at or below 80 inches above the surface. The provision has been revised in the final rule to apply only to ground level accessible routes in order to permit roofs on elevated play structures lower than 80 inches above the deck or platform.

15.6.4.3 Clear Width

This section specifies the dimensions for the clear width for accessible routes within play areas.

Comment. Commenters questioned why a 60 inch minimum clear width is required for ground level accessible routes when the final rule on children's elements did not modify the width of the accessible route for other types of facilities serving children.[26]

Response. The ground level accessible route in a play area is unique since the route may be the only area where accessible surfacing is provided. When the accessible route is the only accessible surface, it is likely that children with disabilities will be restricted to that small portion of the play area while other children are not so restricted. Furthermore, 60 inches is the minimum clear width necessary for turning.

Comment. Commenters noted that children who use wheelchairs leave their mobility devices when they use transfer systems and therefore the clear width of transfer systems does not need to be the same as the clear width of ramps on elevated accessible routes.

Response. An exception has been added to the final rule permitting the clear width of transfer systems connecting elevated play components to be 24 inches minimum.

15.6.4.4 Ramp Slope and Rise

This section specifies the slope and rise of ramps connecting ground level play components and ramps connecting elevated play components.

Comment. Commenters wanted more information about the technical provisions for ramps, including landings, handrails, and edge protection.

Response. The technical provisions for ramps are in ADAAG 4.8 (Ramps), including provisions for landings, handrails, and edge protection. Some of these provisions are modified by 15.6.4.4.

Comment. Designers requested clarification regarding the transition between accessible routes within a play area and accessible routes on a site. They asked if the transition is required to have a 1:16 maximum slope or a 1:12 maximum slope.

Response. Transitions at the boundary of play area accessible routes and site accessible routes must comply with ADAAG 4.5.2 (Changes in Level), which provides that changes in level greater than ½ inch must comply with ADAAG 4.8 (i.e., 1:12 maximum slope). Where a rubber surface is installed on top of asphalt to provide impact attenuation, the edges of the rubber surface may create a change in level between the adjoining ground surface. Where the change in level is greater than ½ inch, a sloped surface with a maximum slope of 1:12 must be provided. Products are commercially available that provide a 1:12 slope at transitions. An appendix note (A15.6.7) has been added to provide guidance on transitions.

Comment. A manufacturer preferred limiting the length of ramp runs to 12 feet, instead of limiting the rise of ramps to 12 inches.

Response. The regulatory negotiation committee wanted to limit the distance between the ramp and decks or platforms where children gather and interact, and also encourage designers to provide ramps with a lesser slope than the 1:12 maximum. Limiting the rise of ramps to 12 inches allows designers to use different combinations of ramp runs and ramp slopes to reach the same elevation. For example, to reach a 12 inch high deck or platform, a designer could use a 12 foot ramp with the maximum 1:12 slope, or a 14 foot ramp with a less steeper 1:14 slope. If the ramp run is limited to 12 feet, the designer could only use the maximum 1:12 slope.

15.6.4.5 Handrails

This section specifies dimensions for handrails on ramps provided within play areas. An exception has been revised in the final rule to clarify that handrails are not required at ramps located within ground level use zones and another exception has been added that does not require handrail extensions at the top and bottom of ramps to avoid any potential protrusion into circulation paths, especially on elevated decks or platforms.

15.6.5 Transfer Systems

This section contains technical provisions for transfer systems. The section clarifies that transfer platforms must be located where transfer is intended to be from a wheelchair or other mobility device, and that transfer steps must be located where movement is intended from a transfer platform to a level with elevated play components required to be located on an accessible route. The section also clarifies the orientation of the transfer space. The NPRM requested information regarding the effective placement of transfer supports. Commenters provided some examples of transfer supports designs. An appendix note (A15.6.5) has been added to provide guidance on transfer supports.

15.6.6 Play Components

This section contains technical provisions for ground level play components located on accessible routes and elevated play components connected by ramps. The provisions specify the dimensions for maneuvering space, clear floor or ground space, heights and clearances at play tables, the height of seats and entry points, and transfer supports.

Comment. Commenters requested clarification regarding the location of the clear floor or ground spaces and maneuvering spaces, and whether clear floor or ground spaces, maneuvering spaces, and accessible routes may overlap.

Response. A specific location has not been designated for the clear floor or ground spaces and maneuvering spaces, except for swings, because each play component may require that the space be placed in a unique location. The maneuvering space for swings must be located immediately adjacent to the swing (see figure 66). Clear floor or ground spaces, maneuvering spaces, and accessible routes may overlap within play areas.

[26] See not 5, *supra.*

Comment. The NPRM proposed reach ranges for manipulative or interactive features of play components. Commenters noted that the reach ranges are not consistent with the ADAAG provisions for children's elements and the ASTM F 1487–98 standard. The International Playground Equipment Manufacturers Association recommended a reach range between 9 inches and 48 inches for a side reach, and 20 inches to 36 inches for a forward reach. Commenters questioned how the proposed reach ranges might apply to overhead play components and what provisions would apply to reaches over obstructions. They also questioned applying reach ranges designed to accommodate children who use wheelchairs to play components reached by transfer systems.

Response. The reach ranges have been moved to an appendix note (A15.6.6.6) and are advisory only. This is consistent with the action taken in the final rule on children's elements.[27] The regulatory negotiation committee proposed the reach ranges based on the NPRM on children's elements.[28] Comments on that rulemaking and this rulemaking have raised important issues that deserve further research.

Comment. Commenters noted that the proposed reach ranges were not adequate for play tables such as sand and water tables. These play components necessitate a reach over an obstruction and the NPRM did not include a provision for knee and toe clearance to facilitate this type of reach.

Response. A provision has been added to the final rule to address the concerns. Although the reach ranges are advisory only, knee and toe clearance for play tables have been included in the final rule. These clearances are consistent with the provisions in ADAAG for children's elements such as lavatories. An exception provides that play tables designed for children ages 5 and under are not required to provide knee and toe clearance if a parallel approach to the table is provided.

15.6.7 Ground Surfaces

This section provides that ground surfaces along accessible routes, clear floor or ground spaces, and maneuvering spaces within play areas must comply with ADAAG 4.5.1 (Ground or Floor Surfaces—General) and the ASTM F 1951–99 Standard Specification for Determination of Accessibility of Surface Systems Under and Around Playground Equipment. The ground surfaces must be inspected and maintained regularly and frequently to ensure continued compliance with the ASTM F 1951–99 standard. If located within use zones, the ground surfaces also must comply with the ASTM F 1292–99 Standard Specification for Impact Attenuation of Surface Systems Under and Around Playground Equipment. The NPRM referenced the ASTM PS 83 Provisional Standard Specification for Determination of Accessibility of Surface Systems Under and Around Playground Equipment. The ASTM PS 83 standard has been finalized as the ASTM F 1951–99 standard. Minor editorial changes were made between the provisional standard and the final standard.

Comment. Commenters requested more information about the ASTM PS 83 standard.

Response. The ASTM standards are copyrighted private consensus standards and are available from the American Society for Testing and Materials (ASTM), 100 Barr Harbor Drive, West Conshohocken, PA 19428–2959, telephone (610) 832–9585. The cost of the ASTM F 1951–99 standard is $30. The ASTM standards may be ordered online from ASTM (http://www.astm.org). An appendix note (A15.6.7) has been added to provide guidance on the ASTM F 1951–99 standard.

Comment. Some commenters were concerned that engineered wood fiber products would not provide an adequate accessible surface. Other commenters reported positive experiences with engineered wood fiber products in play areas used by children with disabilities. Commenters also requested that the Access Board publish a list of accessible ground surfaces.

Response. Some engineered wood fiber products have been tested and meet the ASTM F 1951–99 standard, and others have not. The fact that a specific product has been tested and meets that ASTM F 1951–99 standard does not necessarily mean that all other similar products will meet the standard. Engineered wood fiber surfaces will require frequent maintenance to comply with the ASTM F 1951–99 standard because of surface displacement due to user activity or looseness due to moisture. The settling of engineered wood fiber may also affect the distance between the ground surface and transfer platforms. The final rule requires ground surfaces to be inspected and maintained regularly and frequently to ensure continued compliance with the ASTM F 1951–99 standard. The Department of Justice regulations for titles II and III of the ADA also require public and private entities to maintain accessible features.[29]

Designers and operators are likely to choose materials that best serve the specific needs of each play area. The type of material selected will affect the frequency and cost of maintenance. The existence of the ASTM F 1951–99 standard should hasten the development of new materials and improvements in existing products. The Access Board plans to develop technical assistance materials on accessible ground surfaces. Based on concerns expressed by commenters and the fact that the ASTM F 1951–99 standard is new, the Access Board will closely monitor how well the standard provides for accessible surfaces.

15.6.8 Soft Contained Play Structures

This section requires an accessible route to serve entry points of soft contained play structures. Where three or fewer entry points are provided, at least one must be located on an accessible route. Where four or more entry points are provided, at least two must be located on an accessible route. Accessible routes must comply with ADAAG 4.3 (Accessible Route). An exception provides that transfer systems complying with 15.6.5 and platform lifts complying with ADAAG 4.11 (Platform Lifts—Wheelchair Lifts) and applicable State or local codes are permitted to be used as part of an accessible route. There were very few comments on this section and no changes have been made in the final rule.

Regulatory Process Matters

Executive Order 12866: Regulatory Planning and Review

This final rule is a significant regulatory action under Executive Order 12866 and has been reviewed by the Office of Management and Budget. An economic assessment of the potential costs and benefits of the final rule has been prepared and has been placed in the docket for public inspection. The economic assessment is also available on the Access Board's Internet site (http://www.access-board.gov/play/assess.htm). The economic assessment is summarized below.

Number and Size of Play Areas Affected

Ten major business and government categories are identified that are likely to own or operate play areas. They include eating places; hotels and motels; sporting and recreational camps; recreational vehicle parks and

[27] See note 5, *supra.*

[28] See 61 FR 37964 (July 22, 1996).

[29] See 28 CFR 35.133 (http://www.usdoj.gov/crt/ada/reg2.html) and 28 CFR 26.211 (http://www.usdoj.gov/crt/ada/reg3a.html).

campsites; miscellaneous amusement and recreation facilities; public elementary and middle schools; private (nonsectarian) elementary and middle schools; child care facilities; civic, social and fraternal associations; and municipal and state parks. For each category, lower and upper bound estimates are made of the number of establishments that are likely to have commonly used playground equipment, and the annual number of playgrounds that are expected to be constructed or replaced. The estimates are further broken down by play area size (small, medium, and large). Table 1 shows the results of these estimates. The estimates do not include soft contained play structures because the guidelines are not expected to have a cost impact on those play areas.

TABLE 1.—NUMBER AND SIZE OF PLAY AREAS AFFECTED ANNUALLY BY GUIDELINES

Play area size	Lower bound estimates	Upper bound estimates
Small	7,800	10,400
Medium	6,400	8,300
Large	3,200	5,200
Total Play Areas	17,400	23,900

Baseline

To estimate the incremental costs of the guidelines, a baseline was established against which the cost of play areas designed and constructed in accordance with the guidelines can be compared. The baseline is a reasonable forecast of how play areas would be designed and constructed in the future in the absence of the guidelines. The following factors were considered in establishing the baseline: evolution of industry standards and practices; other civil rights laws and regulations guaranteeing the rights of individuals with disabilities (*i.e.,* Section 504 of the Rehabilitation Act, and Individuals with Disabilities Education Act); and the degree of compliance with those civil rights laws and regulations.

Beginning in 1990, the American Society of Testing and Materials (ASTM) established several subcommittees to develop voluntary standards for play areas. These standards include: ASTM F 1487–99 Standard Consumer Safety Performance Specification for Playground Equipment for Public Use (initially issued in 1993); ASTM PS 83–97 Provisional Standard Specification for Determination of Accessibility of Surface Systems Under and Around Playground Equipment (issued in 1997); ASTM F 1951–99 Standard Specification for Determination of Accessibility of Surface Systems Under and Around Playground Equipment (issued in 1999); and ASTM F 1918–98 Standard Safety Performance Specification for Soft Contained Play Equipment (issued in 1998). Although these ASTM standards are primarily concerned with safety, they also include technical provisions for accessible features such as accessible routes, transfer systems, ramps, and ground surfaces. The ASTM standards are voluntary, but most manufacturers follow them. It is common today for playground equipment manufacturers to incorporate as a standard feature on composite play structures a transfer system to at least one deck and to provide at least one activity panel and slide on that deck. Playground equipment manufacturers and ground surface material suppliers advertise and promote the accessibility of their products through their catalogues and web sites.

Public schools and parks have had an obligation since the 1970's under Section 504 of the Rehabilitation Act and the Individuals with Disabilities Education Act to provide for accessibility in new construction and alterations. Public schools and parks must have Section 504 coordinators who are responsible for ensuring among other things that these accessibility requirements are met. These other civil rights laws and regulations have been enforced to require public schools and parks to provide an accessible route through play areas to a range of play components.

With the increased availability of accessible playground equipment and accessible ground surfaces in the marketplace as a result of the ASTM standards and a long history of coverage by other civil rights laws and regulations, a high degree of compliance with respect to providing for accessibility is expected by public schools and parks when designing and constructing playground equipment. Private entities covered by title III of the ADA do not have as long a history of coverage by civil rights laws and regulations guaranteeing the rights of individuals with disabilities. However, larger private entities that operate play areas are more likely to know about developments in the marketplace and the availability of accessible playground equipment and accessible surface materials, and are more likely to purchase playground equipment and surface materials that provide for accessibility. Smaller private entities that operate play areas may not be as knowledgeable about these matters and have a lesser degree of compliance.

Three models representing a small, medium, and large play area were developed based on the above factors. For each model, equipment and ground surface costs are estimated for a baseline design and a design complying with the guidelines. The primary difference between baseline designs and the guidelines designs involves the number of ground level and elevated play components that are located on an accessible route, which in turn affects how much accessible ground surface is provided and the extent to which transfer systems and ramps are provided. Generally, the baseline design assumes that a smaller number of ground level play components are located on accessible routes than required by the guidelines and that a transfer system is provided only to one deck on a composite play structure, making fewer elevated play components accessible than required by the guidelines.

Different ground surface materials were used for each model. For the small play area, the baseline design used a loose fill surface such as sand or wood chips for the entire play area; and the guidelines design used two options: An engineered wood fiber surface for the entire play area (option 1), and a combination of rubber surface along accessible routes, clear floor or ground spaces, and maneuvering spaces and a loose fill surface for the rest of the play area (option 2).[30] This is a change from the assumption made in the economic assessment for the NPRM. A loose fill surface was used for the baseline design for the small play area in the economic assessment for the final rule based on comments from child care facilities, which have a large number of small play areas, stating that they would not use an engineered wood fiber surface, or a combination of rubber surface and loose fill surface in the absence of the guidelines. For the medium and large play areas, both the baseline designs and the guidelines designs used two options: An engineered wood fiber surface for the entire play area (option 1) and a combination of rubber surface along accessible routes, clear floor or ground spaces, and maneuvering spaces and a loose fill surface for the rest of the play area (option 2) because public schools and parks represent a large number of medium and large play areas and it is assumed that these facilities

[30] Rubber surface was used along accessible routes, clear floor or ground spaces, and maneuvering spaces. The rubber surface was designed to be as uninterrupted as possible to avoid potential tripping hazards.

would use surfaces complying with the ASTM F 1951–99 standard in the absence of the guidelines based on the factors discussed above. This is the same assumption made in the economic assessment for the NPRM. The comments did not question this assumption. Some owners and operators, especially in urban areas, have chosen to use a rubber surface for the entire play area in the absence of the guidelines. The economic assessment overestimates the incremental surface costs for those play areas.

Incremental Equipment and Ground Surface Costs

Equipment and ground surface costs for the baseline designs and the guidelines designs are presented in Table 2. For equipment, installation is estimated at 20 percent to 40 percent of equipment cost. Ground surface costs reflect regional variations in labor and materials.

TABLE 2.—EQUIPMENT AND GROUND SURFACE COSTS

Play area size	Baseline		Guidelines		Percent change
	Low	High	Low	High	
Surface Option 1: Engineered Wood Fiber					
Small	$11,828	$15,345	$12,128	$16,295	2.5–6.2
Medium	18,740	27,362	20,636	30,032	9.8–10.1
Large	42.634	57,932	51,863	68,284	17.9–21.6
Surface Option 2: Rubber & Loose Fill					
Small	$11,828	$15,345	$12,775	$17,560	8.0–14.4
Medium	18,537	25,992	22,669	33,845	22.3–30.2
Large	43,511	57,688	54,969	74,109	26.3–28.5

The sources of the cost increases are discussed below.

Small Play Area

For the baseline design, the small play area has a loose fill surface; a composite play structure with 4 elevated play components on a single deck; a transfer platform and transfer steps to the deck; and 4 ground level play components. The guidelines do not result in any equipment changes. For the guidelines design the loose fill surface is replaced entirely with an engineered wood fiber surface (option 1) or a rubber surface (option 2) is installed along accessible routes, clear floor or ground spaces, and maneuvering spaces at certain ground level play components. The cost increase for the engineered wood fiber surface (option 1) is $300 to $950, and for the rubber surface (option 2) is $946 to $2,215.

Medium Play Area

For the baseline design, the medium play area has an engineered wood fiber surface (option 1) or a combination of rubber surface and loose fill surface (option 2); a composite play structure with 10 elevated play components on multiple decks at varying heights; a transfer platform and transfer steps that connect to a 36 inch high deck on which there are 3 elevated play components; and 3 ground level play components. For the guidelines design, the following are added: A 48 inch high deck (2 elevated play components are relocated from the 60 inch high deck to the 48 inch high deck); a transfer step to connect the 36 high and 48 inch high decks, and 1 ground level play component. The cost of these equipment changes is $1,680 to $1,960. The use zones are enlarged by 122 square feet as a result of the equipment changes. The cost for additional engineered wood fiber surface (option 1) for the expanded use zones is $216 to $710. The cost for additional rubber surface (option 2) for accessible routes, clear floor or ground spaces, and maneuvering spaces, and for loose fill for the expanded use zones is $2,452 to $5,893.

Large Play Area

For the baseline design, the large play area has an engineered wood fiber surface (option 1) or a combination rubber surface and loose fill surface (option 2); 20 elevated play components on multiple decks at varying heights; a transfer platform and transfer steps that connect to a 36 inch high deck on which there are 4 elevated play components (one of the elevated play components is a swinging bridge which connects to another 36 inch high deck with 2 more elevated play components); and 6 ground level play components. For the guidelines design, the following are added: An earthen berm and ramp to connect to another 36 inch high deck which is extended to connect to the ramp (this deck has 5 elevated play components); and 2 ground level play components. The cost of these equipment changes is $9,039 to $9,821. The use zones are enlarged by 94 square feet as a result of the equipment changes. The cost for additional engineered wood fiber surface (option 1) for the expanded use zones is $190 to $621. The cost for additional rubber surface (option 2) for accessible routes, clear floor or ground spaces, and maneuvering spaces, and for loose fill for the expanded use zones is $2,419 to $6,690.

Incremental Maintenance Costs (Savings)

Maintenance costs are estimated for the different ground surfaces in the baseline designs and guidelines designs for the model play areas. Maintenance activities include inspecting surfaces; raking and leveling surfaces; and topping off surfaces. Typical maintenance frequencies are presented in Table 3.

TABLE 3.—TYPICAL MAINTENANCE FREQUENCIES

Maintenance activity	Loose fill	Engineered wood fiber	Rubber
Inspection	Daily to Weekly	Daily to Weekly	Weekly.
Rake & Level	Daily to Weekly	Weekly to as Required	Not Required.

TABLE 3.—TYPICAL MAINTENANCE FREQUENCIES—Continued

Maintenance activity	Loose fill	Engineered wood fiber	Rubber
Top Off	1 to 3 years	3 years	Not Required.

Source: Henderson, Walter. Catching Kids When They Fall: Guidelines to Choosing a Playground Surface, *Parks & Recreation,* April 1997, pp. 84–92.

To aggregate routine maintenance costs with the one-time capital costs for equipment and ground surfaces, the maintenance costs are expressed as the present value of the annual maintenance costs for 15 years, discounted at a 7 percent rate of return. The incremental maintenance costs for the guidelines designs compared to the baseline designs for the model play areas are presented in Table 4.

TABLE 4.—INCREMENTAL MAINTENANCE COSTS (SAVINGS)

Play area size	Surface option 1: Engineered wood fiber	Surface option 2: Rubber & loose fill
Small	($490)	($1,200)
Medium	1,170	(2,980)
Large	900	(4,810)

For small play areas, using an engineered wood fiber surface (option 1) or a combination of rubber surface and loose fill surface (option 2) will result in a reduction in maintenance costs compared to an all loose fill surface over the life cycle of the play area. For medium and large play areas, using a combination of rubber surface and loose fill surface (option 2) will result in a reduction in maintenance costs over the life cycle of the play area.

Aggregate Incremental Costs for Equipment, Ground Surface, and Maintenance

Table 5 combines the incremental changes in equipment and ground surface costs from Table 2 and the incremental changes in maintenance costs from Table 4 to yield the aggregate incremental costs of the guidelines. The mid-point of the cost ranges in Table 2 are used to simplify the aggregation of the costs.

TABLE 5.—AGGREGATE INCREMENTAL COSTS (SAVINGS)

Play area size	Low	High
Surface Option 1: Engineered Wood Fiber		
Small	($190)	$460
Medium	3,100	3,800
Large	10,100	11,300

TABLE 5.—AGGREGATE INCREMENTAL COSTS (SAVINGS)—Continued

Play area size	Low	High
Surface Option 2: Rubber & Loose Fill		
Small	(260)	1,000
Medium	1,200	4,900
Large	6,600	11,600

Total Annual Costs of Guidelines

The total annual costs of the guidelines are the sum of the social costs and the direct costs. The lower and upper bound estimates of the total annual costs are presented in Table 6. Generally, as the cost of a product goes up, society consumes less of the product. Since the guidelines will increase the cost of designing and constructing play areas, it is assumed that the guidelines will result in fewer or smaller play areas built in the future. The loss of play opportunities resulting from fewer or smaller play areas built is the social costs of the guidelines. The social costs are estimated by making assumptions about society's elasticity of demand for play areas and using traditional economic analysis. The direct costs are the aggregate increase in the annual cost of play areas that are designed and constructed after the guidelines are adopted as standards by the Department of Justice.

TABLE 6.—TOTAL ANNUAL COSTS OF GUIDELINES

[$ in millions]

All play areas	Surface option 1: Engineered wood fiber	Surface option 2: Rubber & loose fill
Social Costs		
Low	$8	$3
High	12	15
Direct Costs		
Low	$29	$18
High	61	69
Total Annual Costs		
Low	$37	$21
High	73	84

Benefits of Guidelines

The guidelines will make play areas accessible to 5.1 million children with disabilities, between the ages of 3 and 14.[31] Parents and other adults with disabilities who supervise children will be able to accompany the children when they visit play areas. Parents of children with disabilities will benefit from lower travel costs to take their children to accessible play areas. Businesses that provide play areas as part of their facilities may benefit from increased profits as families with individuals with disabilities are more likely to patronize their establishments. Children with disabilities will benefit from increased opportunities to play and to have social interaction with other children. Children without disabilities may also benefit from this diversity. It is not feasible to quantify these benefits and compare them to the costs of the guidelines.

Not all government policies are based on maximizing economic efficiency. Even when the market is operating efficiently, there may be groups or individuals who are subject to discriminatory practices and remain ''under-served.'' The Americans with Disabilities Act is a civil rights law that was enacted by overwhelming bipartisan majorities in Congress and reflects the societal decision to eliminate the various forms of discrimination continually encountered by individuals with disabilities, including the discriminatory effects of architectural barriers. Traditional cost-benefit analysis is deficient when it comes to measuring civil rights benefits and making judgements about fairness or equity.

In the opinion of the Access Board, the civil rights benefits of the guidelines in ensuring that children with disabilities, and parents and other adults with disabilities who supervise children on play areas, have an equal opportunity to use and enjoy play areas justify the costs of the guidelines.

[31] Bureau of the Census, Americans with Disabilities: 1994–95—Table 2 (http://www.census.gov/hhes/www/disable/sipp/disab9495/ds94t2.html). The data provided does not allow for an exact measure of the 2 to 12 years age group.

Regulatory Flexibility Act

The final regulatory flexibility analysis required by the Regulatory Flexibility Act has been performed in conjunction with the preparation of the preamble and economic assessment for the final rule. The analysis is summarized below.

Need for, and Objectives of, Guidelines

The Access Board is required to issue accessibility guidelines under the Americans with Disabilities (ADA) to ensure that new construction and alterations of facilities covered by titles II and III of the law are readily accessible to and usable by individuals with disabilities. Play areas are among the facilities covered by titles II and III of the ADA. Play areas have unique features that are not adequately addressed by the Americans with Disabilities Act Accessibility Guidelines (ADAAG). The play area guidelines will amend ADAAG to include scoping and technical provisions for ground level and elevated play components, accessible routes, ramps and transfer systems, ground surfaces, and soft contained play structures.

Significant Issues Raised by Public Comments

The following significant issues were raised by the comments.

Questioning of Statutory Requirement

Commenters questioned why each newly constructed play area must be accessible. As an alternative, they suggested that: One accessible play area per region be provided; play areas be modified for accessibility as needed; and subsidies be provided for making play areas accessible. The ADA is a civil rights law that ensures individuals with disabilities the basic right to use and enjoy goods and services made available to the public. The ADA specifically requires all newly constructed facilities to be accessible. It is more cost effective to incorporate accessible design into the construction of new facilities than to modify facilities afterwards to provide for accessibility. As discussed in the preamble to the final rule, tax credits and tax deductions are available to private entities to remove architectural barriers in existing facilities.[32] In addition, federal funds are available through the Community Development Block Grant Program for removing architectural barriers in existing facilities.[33]

Requests for Exemptions From Guidelines

Child care facilities claimed that the cost of the guidelines would be prohibitive, and requested that carrying or lifting be permitted as an alternative to accessibility or that play areas in child care facilities for children ages 5 and under be exempt from the guidelines. It has been a long standing interpretation of civil rights laws for individuals with disabilities that carrying and lifting are ineffective and unacceptable methods for providing accessibility.[34] The economic assessment shows that the incremental capital and maintenance costs of the guidelines over a 15 year life cycle for a small play area that may be typically found in a child care facility ranges from a cost savings of $190 to a cost increase of $460 for a play area with an engineered wood fiber surface, and from a cost savings of $260 to a cost increase of $1,000 for a play area with a combination rubber and loose fill surface. Tax credits and tax deductions are available to small businesses for architectural barrier removal.[35] Federal funds also are available through the Community Development Block Grant Program to remove architectural barriers in existing facilities. State and local governments may use these funds to remove architectural barriers in existing play areas in publicly operated and privately operated child care facilities.[36] An exception has been added to the final rule that exempts family child care facilities where the proprietor actually resides from the play area guidelines.

Amusement parks and theme parks requested that amusement attractions and amusement rides be exempt from the play area guidelines. An exception has been added to the final rule that exempts amusement attractions located in amusement parks and theme parks from the play area guidelines, except for soft contained play structures. The exception is limited and applies to amusement attractions such as fun houses and barrels. Amusement rides are the subject of a separate rulemaking.[37]

Several commenters expressed concerns regarding application of the guidelines to play areas with unique designs and features, and some suggested that exceptions be made for such play areas. The concerns are addressed in the preamble to the final rule under General Issues, Unique Play Areas.

Requests for Reduced Scoping

Commenters requested that the scoping provision, which requires additional numbers of ground level play components located on an accessible route based on the number of elevated play components provided, be reduced. The scoping was reduced in the final rule from 50 percent to approximately one-third. A minimum number of types of ground level play components was specified to ensure a diversity or variety of play opportunities for children with disabilities at the ground level.

Requests for Clarification of Application of the Guidelines to Alterations and Additions

Commenters requested clarification regarding how the play area guidelines apply to alterations and additions. Specific provisions have been added to the final rule in 15.6.1 and 15.6.1 Exception 3 in response to the comments that provide the requested clarification. The provisions are further discussed in the preamble under General Issues, Alterations and Additions.

Number of Small Entities Affected by Guidelines

A description of and estimate of the number of small entities that will be affected by the guidelines is addressed in chapter 3 of the economic assessment. Table 7 presents a summary of the information.

TABLE 7.—NUMBER OF SMALL ENTITIES AFFECTED BY GUIDELINES

SIC	Category	Estimated establishments in 1999	Estimated establishments with play areas	
			Low	High
5812	Eating Places	420,000	8,400	21,000
7011	Hotels & Motels	47,000	940	2,300
7032	Sporting & Recreational Camps	3,600	360	900

[32] See note 14, *supra.*

[33] See note 15, *supra.*

[34] See note 16, *supra.*

[35] See note 14, *supra.*

[36] See note 15, *supra.*

[37] See note 7, *supra.*

TABLE 7.—NUMBER OF SMALL ENTITIES AFFECTED BY GUIDELINES—Continued

SIC	Category	Estimated establishments in 1999	Estimated establishments with play areas	
			Low	High
7033	Recreational Vehicle Parks & Campsites	7,000	2,800	4,200
7999	Miscellaneous Amusement & Recreation	32,000	3,200	8,000
n/a	Public Elementary & Middle Schools	65,000	52,000	65,000
n/a	Private Elementary & Middle Schools	5,500	4,400	5,500
8351	Child Day Care Services	102,000	92,000	102,000
8641	Civic, Social, & Fraternal Associations	3,700	740	1,900
n/a	Municipal & State Parks	110,000	33,000	67,000

The number of public elementary and middle schools, and municipal and State parks also includes large entities.

Reporting and Recordkeeping Requirements

There are no reporting and recordkeeping requirements.

Steps Taken to Minimize Significant Economic Impact on Small Entities

In additional to the exceptions discussed above for family child care facilities and amusement attractions, and the reduced scoping for additional ground level play components, there are other provisions in the play area guidelines that minimize the significant economic impact on small entities. For small and medium size play areas with less than 20 elevated play components, transfer systems are permitted instead of ramps to provide an accessible route to at least 50 percent of the elevated play components. For small play areas with less than 1,000 square feet, a reduced clear width is permitted on accessible routes. The scoping and technical provisions in the play area guidelines are based on the consensus recommendations of a regulatory negotiation committee that represented the interests of all the parties affected by the guidelines. The guidelines will provide a minimum level of accessibility to play areas for individuals with disabilities and ensure that newly constructed and altered play areas meet the accessibility requirements of the ADA.

The only other significant alternative that would minimize the significant economic impact of the guidelines on small entities and was not accepted involved eliminating or further limiting the use of ramps to provide access to larger composite play structures with 20 or more elevated play components. Some children with disabilities will not be able to or will choose not to use transfer systems to access elevated play components. Ramps are preferred over transfer systems for providing access to play areas. Eliminating or further limiting the use of ramps to provide access to larger composite play structures would provide a lower level of access to children with disabilities and further limit their opportunities to interact and socialize with other children.

Technical Assistance

The Access Board will provide technical assistance materials to help small entities understand the scoping and technical provisions of the play area guidelines. The Access Board also has accessibility specialists who can answer questions about the guidelines. Information on how to contact the Access Board is provided at the beginning of this document.

Executive Order 13132: Federalism

The final rule is issued under the authority of the Americans with Disabilities Act. Ensuring the civil rights of groups who have experienced discrimination has long been recognized as a responsibility of the Federal government. The Americans with Disabilities Act was enacted ''to provide clear, strong, consistent, enforceable standards addressing discrimination against individuals with disabilities.'' [38] The final rule adheres to fundamental federalism principles and policy making criteria set forth in Executive Order 13132. The Access Board has consulted with State and local governments throughout the rulemaking process, including convening an advisory committee, establishing a regulatory negotiation committee, and holding public hearings. The interests of State and local governments were represented in the rulemaking process by National Association of Counties, National Association of Elementary School Principals, National League of Cities, and National Recreation and Park Association, all of whom were members of the regulatory negotiation committee that developed the proposed rule. The Access Board has made changes to the proposed rule based on public comments which are discussed in the preamble to the final rule.

[38] 42 U.S.C. 12101(b)(2).

Unfunded Mandates Reform Act

The Unfunded Mandates Reform Act does not apply to proposed or final rules that enforce constitutional rights of individuals or enforce any statutory rights that prohibit discrimination on the basis of race, color, sex, national origin, age, handicap, or disability. Since the final rule is issued under the authority of the Americans with Disabilities Act, which establishes civil rights protections for individuals with disabilities, an assessment of the rule's effects on State, local, and tribal governments, and the private sector is not required by the Unfunded Mandates Reform Act.

List of Subjects in 36 CFR Part 1191

Buildings and facilities, Civil rights, Incorporation by reference, Individuals with disabilities, Transportation.

Thurman M. Davis, Sr.,

Chair, Architectural and Transportation Barriers Compliance Board.

For the reasons set forth in the preamble, part 1191 of Title 36 of the Code of Federal Regulations is amended as follows:

PART 1191—AMERICANS WITH DISABILITIES ACT (ADA) ACCESSIBILITY GUIDELINES FOR BUILDINGS AND FACILITIES

1. The authority citation for 36 CFR part 1191 continues to read as follows:

Authority: 42 U.S.C. 12204.

2. Appendix A to Part 1191 is amended as follows:

a. By revising pages i, ii, 2, 3, 4, and 76 and by adding pages 1A, 4A, and 77 through 81 as set forth below.

b. In the appendix to Appendix A by adding pages A22 through A25 as set forth below.

The revisions and additions read as follows:

Appendix A to Part 1191—Americans with Disabilities Act (ADA) Accessibility Guidelines for Buildings and Facilities

* * * * *

BILLING CODE 8150–01–P

ADA ACCESSIBILITY GUIDELINES FOR BUILDINGS AND FACILITIES TABLE OF CONTENTS

1. PURPOSE 1

2. GENERAL 1

2.1 Provisions for Adults and Children 1
2.2 Equivalent Facilitation 1
2.3 Incorporation by Reference 1A

3. MISCELLANEOUS INSTRUCTIONS AND DEFINITIONS 2

3.1 Graphic Conventions 2
3.2 Dimensional Tolerances 2
3.3 Notes 2
3.4 General Terminology 2
3.5 Definitions 2

4. ACCESSIBLE ELEMENTS AND SPACES: SCOPE AND TECHNICAL REQUIREMENTS 5

4.1 Minimum Requirements 5

4.1.1 Application 5
4.1.2 Accessible Sites and Exterior Facilities: New Construction 6
4.1.3 Accessible Buildings: New Construction 7
4.1.4 (Reserved) 11
4.1.5 Accessible Buildings: Additions 11
4.1.6 Accessible Buildings: Alterations 12
4.1.7 Accessible Buildings: Historic Preservation 14

4.2 Space Allowance and Reach Ranges 14A
4.3 Accessible Route 15
4.4 Protruding Objects 21
4.5 Ground and Floor Surfaces 22
4.6 Parking and Passenger Loading Zones 24
4.7 Curb Ramps 26
4.8 Ramps 27
4.9 Stairs 30
4.10 Elevators 30
4.11 Platform Lifts (Wheelchair Lifts) 36
4.12 Windows 36
4.13 Doors 36

4.14 Entrances . . . 40
4.15 Drinking Fountains and Water Coolers . . . 40
4.16 Water Closets . . . 40
4.17 Toilet Stalls . . . 41A
4.18 Urinals . . . 44
4.19 Lavatories and Mirrors . . . 44A
4.20 Bathtubs . . . 45
4.21 Shower Stalls . . . 45
4.22 Toilet Rooms . . . 45
4.23 Bathrooms, Bathing Facilities, and Shower Rooms . . . 48
4.24 Sinks . . . 49
4.25 Storage . . . 49
4.26 Handrails, Grab Bars, and Tub and Shower Seats . . . 50
4.27 Controls and Operating Mechanisms . . . 51
4.28 Alarms . . . 52
4.29 Detectable Warnings . . . 53
4.30 Signage . . . 53
4.31 Telephones . . . 54
4.32 Fixed or Built-in Seating and Tables . . . 56
4.33 Assembly Areas . . . 56
4.34 Automated Teller Machines . . . 58
4.35 Dressing and Fitting Rooms . . . 58A

5. RESTAURANTS AND CAFETERIAS . . . 59

6. MEDICAL CARE FACILITIES . . . 60

7. BUSINESS, MERCANTILE AND CIVIC . . . 61

8. LIBRARIES . . . 62

9. ACCESSIBLE TRANSIENT LODGING . . . 63

10. TRANSPORTATION FACILITIES . . . 67

11. JUDICIAL, LEGISLATIVE AND REGULATORY FACILITIES . . . 72

12. DETENTION AND CORRECTIONAL FACILITIES . . . 74

13. RESIDENTIAL HOUSING (Reserved) . . . 76

14. PUBLIC RIGHTS-OF-WAY (Reserved) . . . 76

15. RECREATION FACILITIES . . . 76

APPENDIX . . . A1

2.3 Incorporation by Reference.

2.3.1 General. The standards listed in 2.3.2 are incorporated by reference in this document. The Director of the Federal Register has approved these standards for incorporation by reference in accordance with 5 U.S.C. 552(a) and 1 CFR part 51. Copies of the referenced standards may be inspected at the Architectural and Transportation Barriers Compliance Board, 1331 F Street, NW., Suite 1000, Washington, DC; at the Department of Justice, Civil Rights Division, Disability Rights Section,1425 New York Avenue, NW., Washington, DC; or at the Office of the Federal Register, 800 North Capitol Street, NW., Suite 700, Washington, DC.

2.3.2 Referenced Standards. The specific edition of the standards listed below are referenced in this document. Where differences occur between this document and the referenced standards, this document applies.

2.3.2.1 ASTM. Copies of the referenced standards may be obtained from the American Society for Testing and Materials, 100 Bar Harbor Drive, West Conshohocken, Pennsylvania 19428 (http://www.astm.org).

ASTM F 1292-99 Standard Specification for Impact Attenuation of Surface Systems Under and Around Playground Equipment (see 15.6.7.2 Ground Surfaces, Use Zones).

ASTM F 1487-98 Standard Consumer Safety Performance Specification for Playground Equipment for Public Use (see 3.5 Definitions, Use Zone).

ASTM F 1951-99 Standard Specification for Determination of Accessibility of Surface Systems Under and Around Playground Equipment (see 15.6.7.1 Ground Surfaces, Accessibility).

3. MISCELLANEOUS INSTRUCTIONS AND DEFINITIONS.

3.1 Graphic Conventions. Graphic conventions are shown in Table 1. Dimensions that are not marked minimum or maximum are absolute, unless otherwise indicated in the text or captions.

3.2 Dimensional Tolerances. All dimensions are subject to conventional building industry tolerances for field conditions.

3.3 Notes. The text of these guidelines does not contain notes or footnotes. Additional information, explanations, and advisory materials are located in the Appendix.

3.4 General Terminology.

comply with. Meet one or more specifications of *these guidelines*.

if, if ... then. Denotes a specification that applies only when the conditions described are present.

may. Denotes an option or alternitive.

shall. Denotes a mandatory specification or requirement.

should. Denotes an advisory specification or recommendation.

3.5 Definitions.

Access Aisle. An accessible pedestrian space between elements, such as parking spaces, seating, and desks, that provides clearances appropriate for use of the elements.

Accessible. Describes a site, building, facility, or portion thereof that complies with *these guidelines*.

Accessible Element. An *element* specified by *these guidelines* (for example, telephone, controls, and the like).

Accessible Route. A continuous unobstructed path connecting all accessible elements and spaces of a building or facility. Interior accessible routes may include corridors, floors, ramps, elevators, lifts, and clear floor space at fixtures. Exterior accessible routes may include parking access aisles, curb ramps, *crosswalks at vehicular ways*, walks, ramps, and lifts.

Accessible Space. Space that complies with *these guidelines*.

Adaptability. The ability of certain building spaces and elements, such as kitchen counters, sinks, and grab bars, to be added or altered so as to accommodate the needs of *individuals with or without disabilities* or to accommodate the needs of persons with different types or degrees of disability.

Addition. *An expansion, extension, or increase in the gross floor area of a building or facility.*

Administrative Authority. A governmental agency that adopts or enforces regulations and *guidelines* for the design, construction, or *alteration* of buildings and facilities.

Alteration. *An alteration is a change to a building or facility that affects or could affect the usability of the building or facility or part thereof. Alterations include, but are not limited to, remodeling, renovation, rehabilitation, reconstruction, historic restoration, resurfacing of circulation paths or vehicular ways, changes or rearrangement of the structural parts or elements, and changes or rearrangement in the plan configuration of walls and full-height partitions. Normal maintenance, reroofing, painting or wallpapering, or changes to mechanical and electrical systems are not alterations unless they affect the usability of the building or facility.*

Amusement Attraction. *Any facility, or portion of a facility, located within an amusement park*

3.5 Definitions.

or theme park which provides amusement without the use of an amusement device. Examples include, but are not limited to, fun houses, barrels, and other attractions without seats.

Area of Rescue Assistance. *An area, which has direct access to an exit, where people who are unable to use stairs may remain temporarily in safety to await further instructions or assistance during emergency evacuation.*

Assembly Area. A room or space accommodating a *group of* individuals for recreational, educational, political, social, civic, or amusement purposes, or for the consumption of food and drink.

Automatic Door. A door equipped with a power-operated mechanism and controls that open and close the door automatically upon receipt of a momentary actuating signal. The switch that begins the automatic cycle may be a photoelectric device, floor mat, or manual switch (see power-assisted door).

Building. Any structure used and intended for supporting or sheltering any use or occupancy.

Circulation Path. An exterior or interior way of passage from one place to another for pedestrians, including, but not limited to, walks, hallways, courtyards, stairways, and stair landings.

Clear. Unobstructed.

Clear Floor Space. *The minimum unobstructed floor or ground space required to accommodate a single, stationary wheelchair and occupant.*

Closed Circuit Telephone. *A telephone with dedicated line(s) such as a house phone, courtesy phone or phone that must be used to gain entrance to a facility.*

Common Use. Refers to those interior and exterior rooms, spaces, or elements that are made available for the use of a restricted group of people (for example, occupants of a homeless shelter, the occupants of an office building, or the guests of such occupants).

Cross Slope. The slope that is perpendicular to the direction of travel (see running slope).

Curb Ramp. A short ramp cutting through a curb or built up to it.

Detectable Warning. *A standardized surface feature built in or applied to walking surfaces or other elements to warn visually impaired people of hazards on a circulation path.*

Egress, Means of. *A continous and unobstructed way of exit travel from any point in a building or facility to a public way. A means of egress comprises vertical and horizontal travel and may include intervening room spaces, doorways, hallways, corridors, passageways, balconies, ramps, stairs, enclosures, lobbies, horizontal exits, courts and yards. An accessible means of egress is one that complies with these guidelines and does not include stairs, steps, or escalators. Areas of rescue assistance or evacuation elevators may be included as part of accessible means of egress.*

Element. *An architectural or mechanical component of a building, facility, space, or site, e.g., telephone, curb ramp, door, drinking fountain, seating, or water closet.*

Elevated Play Component. *A play component that is approached above or below grade and that is part of a composite play structure consisting of two or more play components attached or functionally linked to create an integrated unit providing more than one play activity.*

Entrance. *Any access point to a building or portion of a building or facility used for the purpose of entering. An entrance includes the approach walk, the vertical access leading to the entrance platform, the entrance platform itself, vestibules if provided, the entry door(s) or gate(s) and the hardware of the entry door(s) or gate(s).*

3.5 Definitions.

Facility. *All or any portion of buildings, structures, site improvements, complexes, equipment, roads, walks, passageways, parking lots, or other real or personal property located on a site.*

Ground Floor. *Any occupiable floor less than one story above or below grade with direct access to grade. A building or facility always has at least one ground floor and may have more than one ground floor as where a split level entrance has been provided or where a building is built into a hillside.*

Ground Level Play Component. *A play component that is approached and exited at the ground level.*

Mezzanine or Mezzanine Floor. *That portion of a story which is an intermediate floor level placed within the story and having occupiable space above and below its floor.*

Marked Crossing. A crosswalk or other identified path intended for pedestrian use in crossing a vehicular way.

Multifamily Dwelling. Any building containing more than two dwelling units.

Occupiable. *A room or enclosed space designed for human occupancy in which individuals congregate for amusement, educational or similar purposes, or in which occupants are engaged at labor, and which is equipped with means of egress, light, and ventilation.*

Operable Part. A part of a piece of equipment or appliance used to insert or withdraw objects, or to activate, deactivate, or adjust the equipment or appliance (for example, coin slot, push button, handle).

Path of Travel. (Reserved).

Play Area. *A portion of a site containing play components designed and constructed for children.*

Play Component. *An element intended to generate specific opportunities for play, socialization, or learning. Play components may be manufactured or natural, and may be stand alone or part of a composite play structure.*

Power-assisted Door. A door used *for human passage* with a mechanism that helps to open the door, or relieves the opening resistance of a door, upon the activation of a switch or a continued force applied to the door itself.

Private Facility. *A place of public accommodation or a commercial facility subject to title III of the ADA and 28 CFR part 36 or a transportation facility subject to title III of the ADA and 49 CFR 37.45.*

Public Facility. *A facility or portion of a facility constructed by, on behalf of, or for the use of a public entity subject to title II of the ADA and 28 CFR part 35 or to title II of the ADA and 49 CFR 37.41 or 37.43.*

Public Use. Describes interior or exterior rooms or spaces that are made available to the general public. Public use may be provided at a building or facility that is privately or publicly owned.

Ramp. A walking surface which has a running slope greater than 1:20.

Running Slope. The slope that is parallel to the direction of travel (see cross slope).

Service Entrance. An entrance intended primarily for delivery of goods or services.

Signage. *Displayed* verbal, symbolic, *tactile*, and pictorial information.

Site. A parcel of land bounded by a property line or a designated portion of a public right-of-way.

Site Improvement. Landscaping, paving for pedestrian and vehicular ways, outdoor lighting, recreational facilities, and the like, added to a site.

Sleeping Accommodations. Rooms in which people sleep; for example, dormitory and hotel or motel guest rooms or suites.

3.5 Definitions.

Soft Contained Play Structure. *A play structure made up of one or more components where the user enters a fully enclosed play environment that utilizes pliable materials (e.g., plastic, netting, fabric).*

Space. *A definable area, e.g., room, toilet room, hall, assembly area, entrance, storage room, alcove, courtyard, or lobby.*

Story. *That portion of a building included between the upper surface of a floor and upper surface of the floor or roof next above. If such portion of a building does not include occupiable space, it is not considered a story for purposes of these guidelines. There may be more than one floor level within a story as in the case of a mezzanine or mezzanines.*

Structural Frame. The structural frame shall be considered to be the columns and the girders, beams, trusses and spandrels having direct connections to the columns and all other members which are essential to the stability of the building as a whole.

TDD. *(Telecommunication Devices for the Deaf). See text telephone.*

TTY (Tele-Typewriter). *See text telephone.*

Tactile. Describes an object that can be perceived using the sense of touch.

Technically Infeasible. *See 4.1.6(1)(j) EXCEPTION.*

Text Telephone (TTY). *Machinery or equipment that employs interactive text based communications through the transmission of coded signals accross the standard telephone network. Text telephones can include, for example, devices known as TDDs (telecommunication display devices or telecommunication devices for deaf persons) or computers with special modems. Text telephones are also called TTYs, an abbreviation for tele-typewriter.*

Transient Lodging.* *A building, facility, or portion thereof, excluding inpatient medical care facilities and residential facilities, that contains sleeping accommodations. Transient lodging may include, but is not limited to, resorts, group homes, hotels, motels, and dormitories.*

Use Zone. *The ground level area beneath and immediately adjacent to a play structure or equipment that is designated by ASTM F 1487 Standard Consumer Safety Performance Specification for Playground Equipment for Public Use (see 2.3.2) for unrestricted circulation around the equipment and on whose surface it is predicted that a user would land when falling from or exiting the equipment.*

Vehicular Way. A route intended for vehicular traffic, such as a street, driveway, or parking lot.

Walk. An exterior pathway with a prepared surface intended for pedestrian use, including general pedestrian areas such as plazas and courts.

back support (e.g., attachment to wall). The structural strength of the bench attachments shall comply with 4.26.3.

(7) Storage. Fixed or built-in storage facilities, such as cabinets, shelves, closets, and drawers, shall contain storage space complying with 4.25.

(8) Controls. All controls intended for operation by inmates shall comply with 4.27.

(9) Accommodations for persons with hearing impairments required by 12.4.3 and complying with 12.6 shall be provided in accessible cells or rooms.

12.6 Visible Alarms and Telephones. Where audible emergency warning systems are provided to serve the occupants of holding or housing cells or rooms, visual alarms complying with 4.28.4 shall be provided. Where permanently installed telephones are provided within holding or housing cells or rooms, they shall have volume controls complying with 4.31.5.

EXCEPTION: Visual alarms are not required where inmates or detainees are not allowed independent means of egress.

13. RESIDENTIAL HOUSING. (Reserved).

14. PUBLIC RIGHTS-OF-WAY. (Reserved).

15. RECREATION FACILITIES.

15.1 Amusement Rides. (Reserved).

15.2 Boating Facilities. (Reserved).

15.3 Fishing Piers and Platforms. (Reserved).

15.4 Golf. (Reserved).

15.5 Miniature Golf. (Reserved).

15.6 Play Areas.

15.6.1* General. Newly designed and newly constructed play areas for children ages 2 and over and altered portions of existing play areas shall comply with the applicable provisions of section 4, except as modified or otherwise provided by this section. Where separate play areas are provided within a site for specified age groups, each play area shall comply with this section. Where play areas are designed or constructed in phases, this section shall be applied so that when each successive addition is completed, the entire play area complies with all the applicable provisions of this section.

EXCEPTION 1: Play areas located in family child care facilities where the proprietor actually resides shall not be required to comply with 15.6.

EXCEPTION 2: Where play components are relocated in existing play areas for the purpose of creating safe use zones, 15.6 shall not apply, provided that the ground surface is not changed or extended for more than one use zone.

EXCEPTION 3: Where play components are altered and the ground surface is not altered, the ground surface shall not be required to comply with 15.6.7, unless required by 4.1.6(2).

EXCEPTION 4: The provisions of 15.6.1 through 15.6.7 shall not apply to amusement attractions.

EXCEPTION 5: Compliance with 4.4 shall not be required within the boundary of the play area.

EXCEPTION 6: Stairs shall not be required to comply with 4.9.

15.6.2* Ground Level Play Components. Ground level play components shall be provided in the number and types required by 15.6.2.1 and 15.6.2.2. Ground level play components that are provided to comply with 15.6.2.1 shall be permitted to satisfy the number required by 15.6.2.2, provided that the minimum required types of play components are provided. Where more than one ground level play component required by 15.6.2.1 and 15.6.2.2 is provided, the

play components shall be integrated in the play area.

15.6.2.1 General. Where ground level play components are provided, at least one of each type provided shall be located on an accessible route complying with 15.6.4 and shall comply with 15.6.6.

15.6.2.2 Additional Number and Types. Where elevated play components are provided, ground level play components shall be provided in accordance with Table 15.6.2.2. Ground level play components required by 15.6.2.2 shall be located on an accessible route complying with 15.6.4 and shall comply with 15.6.6.

EXCEPTION: If at least 50 percent of the elevated play components are connected by a ramp, and if at least 3 of the elevated play components connected by the ramp are different types of play components, 15.6.2.2 shall not apply.

15.6.3* Elevated Play Components. Where elevated play components are provided, at least 50 percent shall be located on an accessible route complying with 15.6.4. Elevated play components connected by a ramp shall comply with 15.6.6.

15.6.4* Accessible Routes. At least one accessible route complying with 4.3, as modified by 15.6.4, shall be provided.

EXCEPTION 1: Transfer systems complying with 15.6.5 shall be permitted to connect elevated play components, except where 20 or more elevated play components are provided, no more than 25 percent of the elevated play components shall be permitted to be connected by transfer systems.

Table 15.6.2.2 Number and Types of Ground Level Play Components Required to be on Accessible Route

Number of Elevated Play Components Provided	Minimum Number of Ground Level Play Components Required to be on Accessible Route	Minimum Number of Different Types of Ground Level Play Components Required to be on Accessible Route
1	Not applicable	Not applicable
2 to 4	1	1
5 to 7	2	2
8 to 10	3	3
11 to 13	4	3
14 to 16	5	3
17 to 19	6	3
20 to 22	7	4
23 to 25	8	4
More than 25	8 plus 1 for each additional 3 over 25, or fraction thereof	5

15.6 Play Areas.

EXCEPTION 2: Where transfer systems are provided, an elevated play component shall be permitted to connect to another elevated play component in lieu of an accessible route.

EXCEPTION 3: Platform lifts (wheelchair lifts) complying with 4.11 and applicable State or local codes shall be permitted to be used as part of an accessible route.

15.6.4.1 Location. Accessible routes shall be located within the boundary of the play area and shall connect ground level play components as required by 15.6.2.1 and 15.6.2.2 and elevated play components as required by 15.6.3, including entry and exit points of the play components.

15.6.4.2 Protrusions. Objects shall not protrude into ground level accessible routes at or below 80 in (2030 mm) above the ground or floor surface.

15.6.4.3 Clear Width. The clear width of accessible routes within play areas shall comply with 15.6.4.3.

15.6.4.3.1 Ground Level. The clear width of accessible routes at ground level shall be 60 in (1525 mm) minimum.

EXCEPTION 1: In play areas less than 1,000 square feet, the clear width of accessible routes shall be permitted to be 44 in (1120 mm) minimum, provided that at least one turning space complying with 4.2.3 is provided where the restricted accessible route exceeds 30 feet (9.14 m) in length.

EXCEPTION 2: The clear width of accessible routes shall be permitted to be 36 in (915 mm) minimum for a distance of 60 in (1525 mm) maximum, provided that multiple reduced width segments are separated by segments that are 60 in (1525 mm) minimum in width and 60 in (1525 mm) minimum in length.

15.6.4.3.2 Elevated. The clear width of accessible routes connecting elevated play components shall be 36 in (915 mm).

EXCEPTION 1: The clear width of accessible routes connecting elevated play components shall be permitted to be reduced to 32 in (815 mm) minimum for a distance of 24 in (610 mm) maximum provided that reduced width segments are separated by segments that are 48 in (1220 mm) minimum in length and 36 in (915 mm) minimum in width.

EXCEPTION 2: The clear width of transfer systems connecting elevated play components shall be permitted to be 24 in (610 mm) minimum.

15.6.4.4 Ramp Slope and Rise. Any part of an accessible route with a slope greater than 1:20 shall be considered a ramp and shall comply with 4.8, as modified by 15.6.4.4.

15.6.4.4.1 Ground Level. The maximum slope for ramps connecting ground level play components within the boundary of a play area shall be 1:16.

15.6.4.4.2 Elevated. Where a ramp connects elevated play components, the maximum rise of any ramp run shall be 12 in (305 mm).

15.6.4.5 Handrails. Where required on ramps, handrails shall comply with 4.8.5, as modified by 15.6.4.5.

EXCEPTION 1: Handrails shall not be required at ramps located within ground level use zones.

EXCEPTION 2: Handrail extensions shall not be required.

15.6.4.5.1 Handrail Gripping Surface. Handrails shall have a diameter or width of 0.95 in (24.1 mm) minimum to 1.55 in (39.4 mm) maximum, or the shape shall provide an equivalent gripping surface.

15.6.4.5.2 Handrail Height. The top of handrail gripping surfaces shall be 20 in (510 mm) minimum to 28 in (710 mm) maximum above the ramp surface.

15.6.5* Transfer Systems. Where transfer systems are provided to connect elevated play components, the transfer systems shall comply with 15.6.5.

15.6.5.1 Transfer Platforms. Transfer platforms complying with 15.6.5.1 shall be provided where transfer is intended to be from a wheelchair or other mobility device (see Fig. 64).

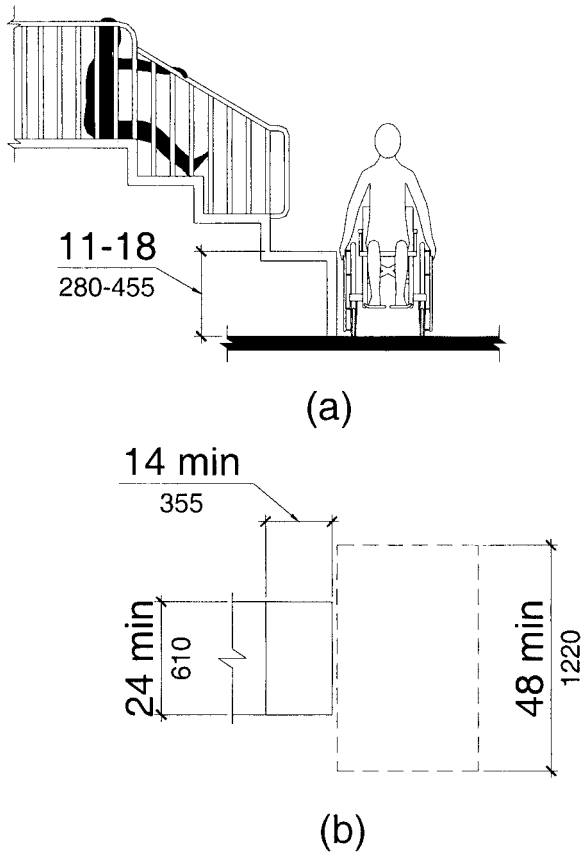

Fig. 64

15.6.5.1.1 Size. Platforms shall have a level surface 14 in (355 mm) minimum in depth and 24 in (610 mm) minimum in width.

15.6.5.1.2 Height. Platform surfaces shall be 11 in (280 mm) minimum to 18 in (455 mm) maximum above the ground or floor surface.

15.6.5.1.3 Transfer Space. A level space complying with 4.2.4 shall be centered on the 48 in (1220 mm) long dimension parallel to the 24 in (610 mm) minimum long unobstructed side of the transfer platform.

15.6.5.1.4 Transfer Supports. A means of support for transferring shall be provided.

15.6.5.2 Transfer Steps. Transfer steps complying with 15.6.5.2 shall be provided where movement is intended from a transfer platform to a level with elevated play components required to be located on an accessible route (see Fig. 65).

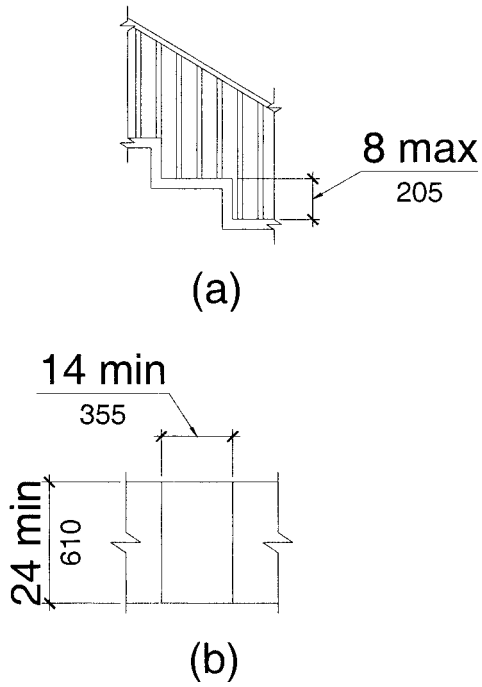

Fig. 65

15.6.5.2.1 Size. Transfer steps shall have a level surface 14 in (355 mm) minimum in depth and 24 in (610 mm) minimum in width.

15.6.5.2.2 Height. Each transfer step shall be 8 in (205 mm) maximum high.

15.6 Play Areas.

15.6.5.2.3 Transfer Supports. A means of support for transferring shall be provided.

15.6.6* Play Components. Ground level play components located on accessible routes and elevated play components connected by ramps shall comply with 15.6.6.

15.6.6.1 Maneuvering Space. Maneuvering space complying with 4.2.3 shall be provided on the same level as the play components. Maneuvering space shall have a slope not steeper than 1:48 in all directions. The maneuvering space required for a swing shall be located immediately adjacent to the swing (see Fig. 66).

15.6.6.2 Clear Floor or Ground Space. Clear floor or ground space shall be provided at the play components and shall be 30 in (760 mm) by 48 in (1220 mm) minimum. Clear floor or ground space shall have a slope not steeper than 1:48 in all directions.

15.6.6.3 Play Tables: Height and Clearances. Where play tables are provided, knee clearance 24 in (610 mm) high minimum, 17 in deep (430 mm) minimum, and 30 in (760 mm) wide minimum shall be provided. The tops of rims, curbs, or other obstructions shall be 31 in (785 mm) high maximum.

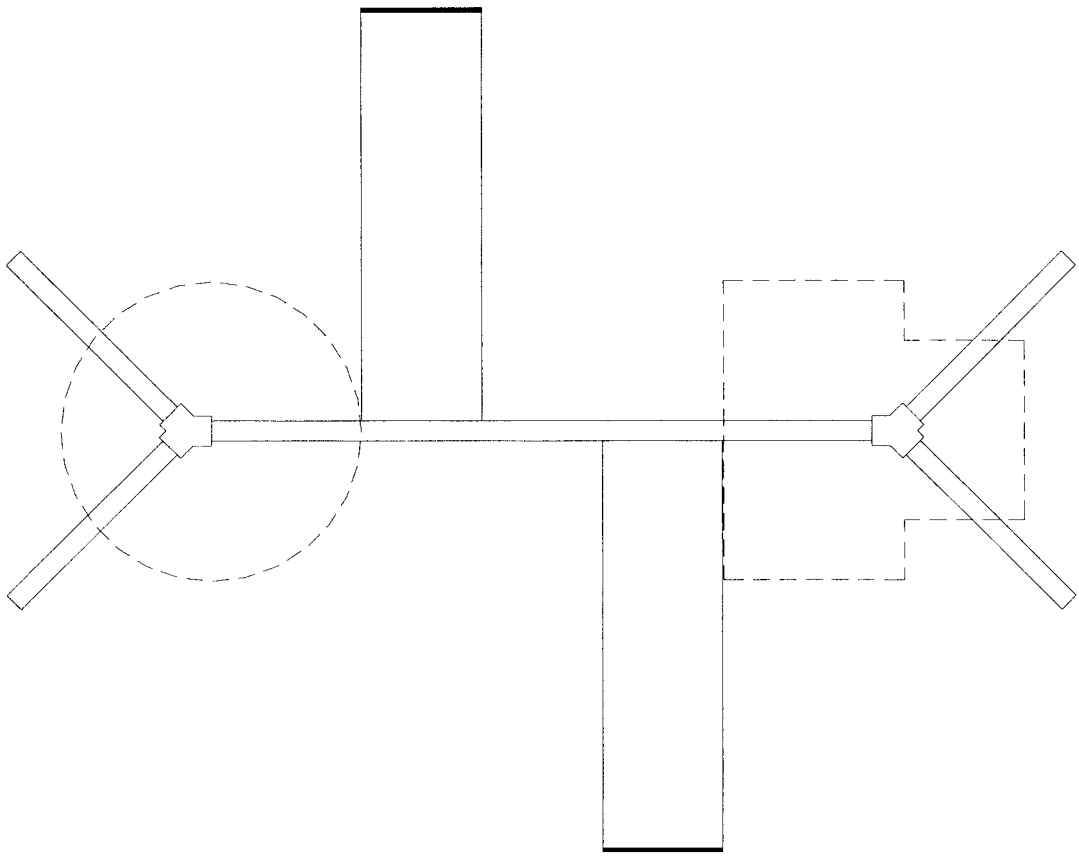

Fig. 66

15.7 Sports Facilities. (Reserved).

EXCEPTION: Play tables designed or constructed primarily for children ages 5 and under shall not be required to provide knee clearance if the clear floor or ground space required by 15.6.6.2 is arranged for a parallel approach and if the rim surface is 31 in (785 mm) high maximum.

15.6.6.4 Entry Points and Seats: Height. Where a play component requires transfer to the entry point or seat, the entry point or seat shall be 11 in (280 mm) minimum and 24 in (610 mm) maximum above the clear floor or ground space.

EXCEPTION: The entry point of a slide shall not be required to comply with 15.6.6.4.

15.6.6.5 Transfer Supports. Where a play component requires transfer to the entry point or seat, a means of support for transferring shall be provided.

15.6.7* Ground Surfaces. Ground surfaces along accessible routes, clear floor or ground spaces, and maneuvering spaces within play areas shall comply with 4.5.1 and 15.6.7.

15.6.7.1 Accessibility. Ground surfaces shall comply with ASTM F 1951 Standard Specification for Determination of Accessibility of Surface Systems Under and Around Playground Equipment (see 2.3.2). Ground surfaces shall be inspected and maintained regularly and frequently to ensure continued compliance with ASTM F 1951.

15.6.7.2 Use Zones. If located within use zones, ground surfaces shall comply with ASTM F 1292 Standard Specification for Impact Attenuation of Surface Systems Under and Around Playground Equipment (see 2.3.2).

15.6.8 Soft Contained Play Structures. Soft contained play structures shall comply with 15.6.8.

15.6.8.1 Accessible Routes to Entry Points. Where three or fewer entry points are provided, at least one entry point shall be located on an accessible route. Where four or more entry points are provided, at least two entry points shall be located on an accessible route. Accessible routes shall comply with 4.3.

EXCEPTION: Transfer systems complying with 15.6.5 or platform lifts (wheelchair lifts) complying with 4.11 and applicable State or local codes shall be permitted to be used as part of an accessible route.

15.7 Sports Facilities. (Reserved).

15.8 Swimming Pools and Spas. (Reserved).

APPENDIX

A15.6.1 General. This section is to be applied during the design, construction, and alteration of play areas for children ages 2 and over. Play areas are the portion of a site where play components are provided. This section does not apply to other portions of a site where elements such as sports fields, picnic areas, or other gathering areas are provided. Those areas are addressed by other sections of ADAAG. Play areas may be located on exterior sites or within a building. Where separate play areas are provided within a site for children in specified age groups (e.g., preschool (ages 2 to 5) and school age (ages 5 to 12)), each play area must comply with this section. Where play areas are provided for the same age group on a site but are geographically separated (e.g., one is located next to a picnic area and another is located next to a softball field), they are considered separate play areas and each play area must comply with this section.

A15.6.2 Ground Level Play Components. A ground level play component is a play component approached and exited at the ground level. Examples of ground level play components include spring rockers, swings, diggers, and stand alone slides. When distinguishing between the different types of ground level play components, consider the general experience provided by the play component. Examples of different types of experiences include, but are not limited to, rocking, swinging, climbing, spinning, and sliding. A spiral slide may provide a slightly different experience from a straight slide, but sliding is the general experience and therefore a spiral slide is not considered a different type of play component than a straight slide.

The number of ground level play components is not dependent on the number of children who can play on the play component. A large seesaw designed to accommodate ten children at once is considered one ground level play component.

Where a large play area includes two or more composite play structures designed for the same age group, the total number of elevated play components on all the composite play structures must be added to determine the additional number and types of ground level play components that must be provided on an accessible route, and the type of accessible route (e.g., ramps or transfer systems) that must be provided to the elevated play components.

Ground level play components accessed by children with disabilities must be integrated in the play area. Designers should consider the optimal layout of ground level play components accessed by children with disabilities to foster interaction and socialization among all children. Grouping all ground level play components accessed by children with disabilities in one location is not considered integrated.

A15.6.3 Elevated Play Components. Elevated play components are approached above or below grade and are part of a composite play structure. A double or triple slide that is part of a composite play structure is one elevated play component. For purposes of this section, ramps, transfer systems, steps, decks, and roofs are not considered elevated play components. These elements are generally used to link other elements on a composite play structure. Although socialization and pretend play can occur on these elements, they are not primarily intended for play.

Some play components may be considered ground level or elevated. For example, a stand alone climber is a ground level play component since it is approached and exited at the ground level. A climber that is attached to a composite play structure may be approached and exited at the ground level and considered a ground level play component, or it may be approached above grade from the composite play structure and considered an elevated component. Where a play component may be considered a ground level or an elevated play component, the designer or operator may choose which type of play component to consider it, but may not use the same play component to meet the requirements for both ground level and elevated play components. In the example of the climber attached to a composite play structure, if the

designer or operator provides an accessible route to the base and the top of the climber and uses it to count toward meeting the requirement in 15.6.3 that at least 50 percent of elevated play components must be located on an accessible route, the designer or operator may not use the same climber to count toward the requirement in 15.6.2 regarding the number and type of ground level play components that must be located on an accessible route.

A15.6.4 Accessible Routes. Accessible routes within the boundary of the play area must comply with 15.6.4. Accessible routes connecting the play area to parking, drinking fountains, and other elements on a site must comply with 4.3. Accessible routes provide children who use wheelchairs or other mobility devices the opportunity to access play components. Accessible routes should coincide with the general circulation path used within the play area. Careful placement and consideration of the layout of accessible routes will enhance the ability of children with disabilities to socialize and interact with other children.

Where possible, designers and operators are encouraged to provide wider ground level accessible routes within the play area or consider designing the entire ground surface to be accessible. Providing more accessible spaces will enhance the integration of all children within the play area and provide access to more play components. A maximum slope of 1:16 is required for ground level ramps; however, a lesser slope will enhance access for those children who have difficulty negotiating the 1:16 maximum slope. Handrails are not required on ramps located within ground level use zones.

Where a stand alone slide is provided, an accessible route must connect the base of the stairs at the entry point, and the exit point of the slide. A ramp or transfer system to the top of the slide is not required. Where a sand box is provided, an accessible route must connect to the border of the sand box. Accessibility to the sand box would be enhanced by providing a transfer system into the sand or by providing a raised sand table with knee clearance complying with 15.6.6.3.

Elevated accessible routes must connect the entry and exit points of 50 percent of elevated play components. Ramps are preferred over transfer systems since not all children who use wheelchairs or other mobility devices may be able to use or may choose not to use transfer systems. Where ramps connect elevated play components, the maximum rise of any ramp run is limited to12 inches. Where possible, designers and operators are encouraged to provide ramps with a lesser slope than the 1:12 maximum. Berms or sculpted dirt may be used to provide elevation and may be part of an accessible route to composite play structures.

Platform lifts complying with 4.11 and applicable State and local codes are permitted as a part of an accessible route. Because lifts must be independently operable, operators should carefully consider the appropriateness of their use in unsupervised settings.

A15.6.5 Transfer Systems. Transfer systems are a means of accessing composite play structures. Transfer systems generally include a transfer platform and a series of transfer steps. Children who use wheelchairs or other mobility devices transfer from their wheelchair or mobility devices onto the transfer platform and lift themselves up or down the transfer steps and scoot along the decks or platforms to access elevated play components. Some children may be unable or may choose not to use transfer systems. Where transfer systems are provided, consideration should be given to the distance between the transfer system and the elevated play components. Moving between a transfer platform and a series of transfer steps requires extensive exertion for some children. Designers should minimize the distance between the points where a child transfers from a wheelchair or mobility device and where the elevated play components are located. Where elevated play components are used to connect to another elevated play component in lieu of an accessible route, careful consideration should be used in the selection of

APPENDIX

the play components used for this purpose. Transfer supports are required on transfer platforms and transfer steps to assist children when transferring. Some examples of supports include a rope loop, a loop type handle, a slot in the edge of a flat horizontal or vertical member, poles or bars, or D rings on the corner posts.

A15.6.6 Play Components. Clear floor or ground spaces, maneuvering spaces, and accessible routes may overlap within play areas. A specific location has not been designated for the clear floor or ground spaces or maneuvering spaces, except swings, because each play component may require that the spaces be placed in a unique location. Where play components include a seat or entry point, designs that provide for an unobstructed transfer from a wheelchair or other mobility device are recommended. This will enhance the ability of children with disabilities to independently use the play component.

When designing play components with manipulative or interactive features, consider appropriate reach ranges for children seated in wheelchairs. The following table provides guidance on reach ranges for children seated in wheelchairs. These dimensions apply to either forward or side reaches. The reach ranges are appropriate for use with those play components that children seated in wheelchairs may access and reach. Where transfer systems provide access to elevated play components, the reach ranges are not appropriate.

Where a climber is located on a ground level accessible route, some of the climbing rings should be within the reach ranges. A careful balance of providing access to play components but not eliminating the challenge and nature of the activity is encouraged.

A15.6.7 Ground Surfaces. Ground surfaces along clear floor or ground spaces, maneuvering spaces, and accessible routes must comply with the ASTM F 1951 Standard Specification for Determination of Accessibility to Surface Systems Under and Around Playground Equipment. The ASTM F 1951 standard is available from the American Society for Testing and Materials (ASTM), 100 Barr Harbor Drive, West Conshohocken, PA 19428-2959, telephone (610) 832-9585. The ASTM F 1951 standard may be ordered online from ASTM (http://www.astm.org). The ASTM 1951 standard determines the accessibility of a surface by measuring the work required to propel a wheelchair across the surface. The standard includes tests of effort for both straight ahead and turning movement, using a force wheel on a rehabilitation wheelchair as the measuring device. To meet the standard, the force required must be less than that required to propel the wheelchair up a ramp with a 1:14 slope. When evaluating ground surfaces, operators should request information about compliance with the ASTM F 1951 standard.

Ground surfaces must be inspected and maintained regularly and frequently to ensure continued compliance with the ASTM F 1951 standard. The type of surface material selected and play area use levels will determine the frequency of inspection and maintenance activities.

Children's Reach Ranges

Forward or Side Reach	Ages 3 and 4	Ages 5 through 8	Ages 9 through 12
High (maximum)	36 in (915 mm)	40 in (1015 mm)	44 in (1120 mm)
Low (minimum)	20 in (510 mm)	18 in (455 mm)	16 in (405 mm)

APPENDIX

When using a combination of surface materials, careful design is necessary to provide appropriate transitions between the surfaces. Where a rubber surface is installed on top of asphalt to provide impact attenuation, the edges of the rubber surface may create a change in level between the adjoining ground surfaces. Where the change in level is greater than ½ inch, a sloped surface with a maximum slope of 1:12 must be provided. Products are commercially available that provide a 1:12 slope at transitions. Transitions are also necessary where the combination of surface materials include loose fill products. Where edging is used to prevent the loose surface from moving onto the firmer surface, the edging may create a tripping hazard. Where possible, the transition should be designed to allow for a smooth and gradual transition between the two surfaces.	

[FR Doc. 00–26466 Filed 10–17–00; 8:45 am]
BILLING CODE 8150–01–C