Federal Register

Monday,
March 11, 2002

Part II

Department of Labor

Mine Safety and Health Administration

30 CFR Parts 18 and 75

Electric Motor-Driven Mine Equipment and Accessories and High-Voltage Longwall Equipment Standards for Underground Coal Mines; Final Rule

DEPARTMENT OF LABOR

Mine Safety and Health Administration

30 CFR Parts 18 and 75

RIN 1219–AA75

Electric Motor-Driven Mine Equipment and Accessories and High-Voltage Longwall Equipment Standards for Underground Coal Mines

AGENCY: Mine Safety and Health Administration (MSHA), Labor.

ACTION: Final rule.

SUMMARY: This final rule establishes MSHA's new mandatory electrical safety standards for the installation, use, and maintenance of high-voltage longwall mining systems used in underground coal mines. The final rule also includes design approval requirements for high-voltage equipment operated in longwall face areas of underground mines. These provisions allow the use of high-voltage longwall face equipment with enhanced safety protection from fire, explosion, and shock hazards. In addition to providing a safer mining environment and facilitating the use of advanced equipment designs, the final rule reduces paperwork requirements by eliminating the need for petitions for modification (variances).

DATES: This regulation is effective May 10, 2002. The incorporation by reference of certain publications listed in the rule is approved by the Director of the Federal Register May 10, 2002.

FOR FURTHER INFORMATION CONTACT: Marvin W. Nichols, Jr., Director, Office of Standards, Regulations and Variances, MSHA, 4015 Wilson Boulevard, Arlington, Virginia 22203–1984. Mr. Nichols can be reached at *nichols-marvin@msha.gov* (Internet e-mail), 703—235–1910 (voice), or 703–235–5551 (fax). You may obtain copies of the final rule in alternative formats by calling this number. The alternative formats available are either a large print version of the final rule or the final rule in an electronic file on computer disk. The final rule also is available on the Internet at *http://www.msha.gov/REGSINFO.HTM.*

SUPPLEMENTARY INFORMATION:

I. Background

On December 4, 1989, the Mine Safety and Health Administration (MSHA) published a proposed rule (54 FR 50062) to revise its electrical safety standards for underground coal mines. That proposed rule addressed all of the Agency's electrical standards for underground coal mines and allowed the use of high-voltage longwall equipment. However, it did not specifically focus on the safety issues related to the use of high-voltage longwall equipment. The Agency published a new proposed rule (57 FR 39036) on August 27, 1992, related specifically to the safe use of high-voltage longwall equipment in underground coal mines. These rules also specifically addressed approval requirements for high-voltage electrical equipment operated in longwall face areas of underground coal mines. The comment period on the proposed rule was scheduled to close on October 23, 1992, but was extended to November 13, 1992 (57 FR 48350). On October 18, 1995, (60 FR 53891), MSHA reopened the rulemaking record for additional comments to the proposed rule to provide all interested parties an opportunity to submit additional comments. The comment period was scheduled to close on November 14, 1995, but was extended to December 18, 1995 (60 FR 57203). The Agency received no requests for a public hearing on the proposed rule. The record was reopened December 28, 1999, for comments on the updated Preliminary Regulatory Impact Analysis (PRIA). The record closed February 28, 2000. Only one comment was received. The commenter agreed with our economic analysis of the cost impact of the proposed rule.

These revised standards allow the use of high-voltage longwall mining systems. Longwall mining methods have undergone numerous advances in technology during the past 25 years. These technological advances have led to improved and safer systems. The additional requirements under 30 CFR part 18 provide enhanced safety protections that are consistent with advances in mine technology that allows high-voltage switchgear to be used on face equipment. Title 30 CFR parts 18 and 75 of this final rule implements a number of changes to approval and safety requirements for high-voltage equipment to accommodate the advances in technology in a manner that protects the safety of miners.

A. Part 18 Electric Motor-Driven Mine Equipment and Accessories

Electrical equipment horsepower in mines has increased over the years. The voltages required to operate this equipment have also increased to accommodate the design of practical and efficient equipment. The design of safe, efficient, and practical high-voltage electric equipment has improved dramatically in recent years. Because of the industry's need for higher voltages and the marked improvement in the design and manufacturing technology of high-voltage components, MSHA developed rules that establish requirements for safe high-voltage electric equipment use. This rule provides improved design requirements for longwall equipment, consistent with existing requirements in 30 CFR part 18, and contains provisions that accommodate new design technology, are practical, and lessen burdens on the mining community, while preserving safety and health protections for miners.

The safety criteria supporting the rule are based on research conducted over the past 18 years by the former U.S. Bureau of Mines (USBM) and MSHA. USBM functions are now a part of the National Institute of Occupational Safety and Health. This research included the following: (1) Foster-Miller research, under USBM contract No. H0308093, which developed a recommended high-voltage permissible loadcenter criteria; (2) MSHA research, under USBM contract No. J0333909, which resulted in modified criteria to address high-voltage permissible switchgear enclosures and the development of test facilities for acceptance of high-voltage permissible loadcenters and switchgear enclosures; (3) Follow-up MSHA inspections on high-voltage machines and longwall mining systems operating under experimental permits to confirm design requirements and operational safety; (4) MSHA internal research and review of engineering reports for further analysis of hazards relating to explosion-proof enclosures which contain high-voltage switching; and, (5) Input from various technical experts throughout the mining community. These criteria are technically sound and have the general consensus of the mining community, including equipment manufacturers and other interested parties.

The first high-voltage longwall system started operating in 1985. Since that time we have issued approximately 130 system design approvals for high-voltage longwall equipment. Over the last 16 years, no electrical-type fatalities or serious injuries occurred to miners because of high-voltage equipment used in accordance with over 100 granted high-voltage petitions for modification (petitions). Because of this new improved high-voltage technology, the designed safety benefits and the observed use experience, MSHA is revising its existing 30 CFR part 18 electric motor-driven mine equipment and accessories approval requirements by adding specific design requirements

for high-voltage longwall equipment in underground mines.

MSHA received comments from all segments of the mining industry, and the final rule addresses these comments. Many commenters were in favor of the new approval requirements and were in agreement on the majority of the provisions in the proposed rule. MSHA carefully reviewed all of the comments. This resulted in the modification of four of the sixteen technical requirements addressed in the proposed rule. We considered the views of all interested parties, including: mine operators; equipment manufacturers; miners' representatives; and other government agencies in developing this final rule.

MSHA is publishing this high-voltage longwall approval rule (30 CFR part 18) along with mandatory safety standards regarding high-voltage longwall equipment (30 CFR part 75). This new 30 CFR part 18 rule provides additional high-voltage equipment specifications that must be followed by the manufacturer in order to obtain MSHA approval of the equipment. The new 30 CFR part 75 rule provides installation, use, and maintenance requirements for high-voltage longwalls in underground coal mines.

B. Part 75 High-Voltage Longwall Equipment Safety Standards

This part of the final rule provides safety requirements for underground high-voltage longwall systems. Currently, longwall mining is permitted under MSHA's existing standards only if it uses low- or medium-voltage electrical power. High-voltage longwall systems are being used, but only when approved by MSHA through the petition for modification process under § 101(c) of the Federal Mine Safety and Health Act of 1977 (Mine Act). During the last 15 years, MSHA has evaluated the safe use of high-voltage longwall equipment, under a petition process that permits a mine operator to request that the application of a safety standard be modified at a particular mine. MSHA grants a petition when it determines that a mine operator has an alternative method which provides the same measure of safety protection as the existing standard, or when the existing standard would result in diminished safety protection to miners. Over the past 15 years, MSHA has granted over 100 petitions for modification to use high-voltage electrical power with longwalls. In the Agency's evaluation of the use of high-voltage longwall mining systems, MSHA concluded that they can be safely used, provided that certain conditions are met. Specifically, the Agency found that the previous safety concerns about explosion, fire and shock hazards initially associated with high-voltage use are sufficiently addressed by this newly-developed technology. In each of the petition cases the Agency granted, MSHA performed a specific on-site investigation to verify this finding. For example, we recognized that high-voltage electric equipment and circuit design improvements in combination with sensitive electrical circuit protections reduce fire, explosion and shock hazards. Newly designed cable handling systems provide additional safety protections against electrical shock, fire and explosion hazards when the cable is moved. Further, lighter power cables are available which reduce back strain and other injury risks to miners from the heavier cable lifting and hauling often associated with the moving or lifting of low- to medium-voltage cables. Moreover, there have been no electrical fatalities and no serious electrical injuries to miners from high-voltage equipment used under the granted modifications.

Because of the new improved high-voltage technology, with its attendant safety benefits, MSHA is revising its existing 30 CFR part 75 electrical safety standards. This final rule does not reduce the protection afforded by existing 30 CFR part 75 standards. It does, however, provide increased protection from electrical hazards, and reduces paperwork burden. It also reduces the time and cost to all parties associated with the petition for modification process. This final rule is implemented in conjunction with revisions to 30 CFR part 18, that address approval requirements for high-voltage equipment. The additional requirements under 30 CFR part 18 are also consistent with advances in mine technology, allowing high-voltage switchgear to be used on face equipment with enhanced safety protection from fire, explosion and shock hazards.

MSHA received comments from all segments of the mining community. Comments from labor, industry and manufacturers generally agree with the proposed rule. The final rule, to the extent feasible and appropriate, responds to commenters' concerns and reflects general consensus of various parties. However, MSHA did not adopt all comments received.

Joint commenters representing both industry and labor recommended that operators mining under granted high-voltage petitions containing non-electrical provisions continue to comply with such provisions. Labor commenters requested that standards addressing high-voltage longwalls also include provisions addressing non-electrical safety and health areas. Specifically, they noted that high-voltage longwall systems of extended widths and lengths can adversely affect not only ventilation, but shearer mounted methane monitors, intake escapeways, exposure to respirable dust, tailgate travelways, and storage plans for self-contained self-rescuers (SCSR's), as well as return entry rockdusting during mining.

It is the Agency's view that non-electrical safety and health issues related to the use of high-voltage longwalls are fully addressed by existing safety and health standards under 30 CFR parts 70 and 75. This view has been upheld by administrative law judge, Assistant Secretary and Court of Appeals decisions. *UMWA* v. *Federal Mine Safety and Health Administration*, 931 F. 2d 908,913 (D.C. Cir. 1991). The promulgated standards relating to ventilation and escapeways under 30 CFR 75.300 *et seq.* (61 FR 9764, March 11, 1996) provide protection with respect to ventilation and escapeways. Mandatory health standards under part 70 address exposures to respirable dust. Section 75.215—*Longwall mining systems*—addresses longwall tailgate travelway protection. Storage plans for SCSRs may be approved by MSHA District Managers in accordance with the specific conditions at each mine under § 75.1714–2—*Self-rescue devices; use and location requirements.* Existing § 75.400—*Accumulation of combustible materials*—provides protection against float coal dust and § 75.402—*Rock dusting*—requires adequate rockdusting measures. MSHA continues to work on improved respirable dust protection requirements in response to recommendations made by the Secretary of Labor's Advisory Committee on the Elimination of Pneumoconiosis Among Coal Mine Workers.

MSHA is aware that several granted modifications for high-voltage longwalls contain non-electrical requirements specific to the affected mine. These requirements are the result of settlement negotiations arising out of the petition process and are not required as part of this electrical standard. Parties to the current petition process may, through a voluntary, cooperative effort, continue to follow the non-electrical provisions after this final rule becomes effective. Moreover, as indicated above, existing and new standards substantially address these concerns and result in no diminution of safety and health protection currently afforded to miners. Moreover, the Agency continually reviews existing standards for

improvements that will enhance miner safety.

Some commenters suggested that the final rule allow a longer phase-in period, where equipment modifications are necessary. The Agency does not believe that a delayed effective date is necessary. Many operators are already complying with these requirements under the petition for modification process and the modern technology necessary to implement the final rule is readily available.

II. Discussion of Final Rule

The following section-by-section portion of the preamble discusses each provision affected, starting with the provisions in part 18. The text of the final rule is included at the end of the document.

Part 18 Electric Motor-Driven Mine Equipment and Accessories

This final rule addresses only those areas where specific additions to 30 CFR part 18 are necessary for the approval of high-voltage longwalls. The existing requirements of 30 CFR part 18 that apply to this equipment have not been revised. Examples of these types of requirements are the general construction requirements of the high-voltage enclosures and the short-circuit and overload protection to be provided. The overload and short-circuit protective device settings were not revised and will continue to be evaluated under existing requirements and Agency policy.

The main safety protections addressed in the final rule are summarized into four areas: (1) Prevention of a high-voltage arc from occurring; (2) Prevention of the resulting heat or flame from igniting a methane-air mixture surrounding the machine if an arc or methane explosion occurs; (3) Prevention of enclosure failure from an increased pressure rise if an arc or methane explosion occurs within the explosion-proof enclosure; and, (4) Personal protection for miners from electrical shock hazards when working in or around the high-voltage equipment.

Section 18.53 High Voltage Longwall Mining Systems (Nameplate Ratings From 1,001 Volts Through 4,160 Volts)

Paragraph (a) of this final rule requires the separation of compartments containing low- and medium-voltage circuits from those with high-voltage circuits in each motor-starter enclosure by location, partitions or barriers. Partitions and barriers, under this final rule, like the proposed rule, are required to be constructed of grounded metal or nonconductive insulating board. These requirements protect against shock hazards which may arise from inadvertent contact with energized high-voltage circuits. With the exception of a controller on a shearer, compliance with this section requires the components within each high-voltage motor-starter enclosure be segregated into separate compartments by voltage classification. The installation of the barriers and partitions provides separation of components in each high-voltage motor-starter enclosure. When complete separation of voltage classifications is not possible with barriers or partitions where both medium- and high-voltage circuits or both low- and high-voltage circuits are connected to a component or device, that component is required to be located in the motor contactor or disconnect device compartment.

This rule covers both explosion-proof and nonexplosion-proof motor-starter enclosures that are presently used by the mining industry. MSHA's policy has been to require barriers and partitions to separate the disconnect device compartment, control/communications compartment and motor contactor compartment in both power centers and motor-starter enclosures. If a motor-starter enclosure is part of a power center, then the partitions and barriers required by this rule only apply to barriers and partitions for the disconnect device compartment, control/communications compartment, and motor-starter compartment of the power center. This rule does not apply to other parts of the power center or to separate power centers that supply power to motor-starter enclosures. The mining industry presently provides barriers for power centers to separate high-voltage components from low- and medium-voltage circuits and equipment. MSHA encourages the industry to continue to provide barriers and partitions in power centers to minimize shock hazards by limiting exposure of personnel to high-voltage components when troubleshooting and testing low- and medium-voltage circuits. If barriers and partitions are not provided on power centers, the power center must be deenergized from an outby set of high-voltage visible disconnects and the high-voltage circuit grounded before troubleshooting and testing is performed on low- or medium-voltage circuits or equipment in the same compartment with high-voltage circuits or equipment.

Commenters suggested that, because of overall machine design considerations, an exception be provided for the controller on a shearer. In response to this comment, MSHA acknowledges that a shearer is a special case. The shearer is not required under § 18.53(f) to have a disconnect switch. Therefore, in an effort to address this issue, the final rule has been modified exempting the requirements of paragraph (a) when applied to a shearer.

One commenter recommended that the term ''location'' be deleted from the final rule, suggesting that there must be a physical separation within compartments to prevent accidental contact with a high-voltage circuit while troubleshooting low- and medium-voltage circuits. Another commenter proposed the use of separate compartments having explosion-proof walls between one compartment and the next. As noted in the proposed rule, the intent of this provision is to minimize shock hazards by preventing exposure of personnel to high-voltage components when troubleshooting and testing low- and medium-voltage circuits in accordance with § 75.820. MSHA believes that this can be accomplished by various types of partitions or barriers, including designing the enclosure into several separate explosion-proof compartments. When designing the partitions or barriers, however, consideration should be given to possible effects of pressure-piling within the enclosure. The use of the word ''location'', in the proposed rule allowed the option of having separate enclosures to house the various compartments, as noted by the commenter. In response to these comments, the final rule removes the word ''location'' to provide for flexibility, but clarifies that the requirement applies to each motor-starter enclosure.

Comments were also received suggesting that we change the word ''board'' to ''material'' in regard to construction of barriers and partitions. Since the word ''board'' suggests a more sturdy barrier than ''material,'' the final rule remains as proposed.

Paragraph (b) of the final rule, like the proposed rule, requires motor-starter enclosure compartment(s) containing high-voltage components be provided with cover interlock switches. These interlock switches will protect miners entering enclosures from shock hazards resulting from accidental contact with energized circuits. A minimum of two interlock switches per cover is required and must be wired into the circuitry so that operation of either switch will deenergize the incoming high-voltage circuits. The Agency believes that a second switch coupled with required maintenance under 30 CFR 75.512 will provide the necessary protection to ensure that the high-voltage circuits are deenergized whenever a cover is

removed. MSHA recommends either a magnetic or a whisker-type switch. MSHA's follow-up inspections of high-voltage equipment with plunger-operated switches reveal that these switches may stick and not operate effectively after exposure to the mine environment.

This rule covers both explosion-proof and nonexplosion-proof high-voltage motor-starter enclosures. MSHA's high-voltage longwall petitions require interlock switches for high-voltage compartments in both power centers and motor-starter enclosures. When a motor-starter enclosure is part of a power center, the interlock switches required by this rule only apply to motor-starter compartments of the power center. This rule does not apply to other parts of the power center or to separate power centers that supply power to motor-starter enclosures. The mining industry presently provides interlock switches for high-voltage compartments on power centers. MSHA encourages the industry to continue to provide interlocks switches for high-voltage compartments of power centers.

There were no comments on this paragraph. However, the last sentence of the proposed rule was deleted to clarify the Agency's intent that at least two switches be used to satisfy 30 CFR part 18.53 (b) requirements.

Paragraph (c) of the final rule, like the proposed rule, requires that circuit-interrupting devices installed in motor-starter enclosures be designed and installed to prevent automatic reclosure. Compliance with this provision protects miners working on the circuit or in other hazardous situations from unanticipated reenergization of the circuit. For example, faults occur in underground electrical systems as a result of roof fall damage or equipment insulation failure. Under such circumstances, the use of automatic reclosing circuit-interrupting devices would create shock and fire hazards should the devices reclose automatically when a short-circuit or ground-fault condition exists in the circuit. There were no comments on this paragraph. Therefore, the language in the final rule has not been changed from the proposed rule.

Paragraph (d) of the final rule, like the proposed rule, specifies that control transformers installed in each longwall motor-starter enclosure or control transformers that supply control power to each longwall motor-starter enclosure, must have electrostatic (Faraday) shielding, grounded by at least a No. 12 American Wire Gauge (AWG) grounding conductor, installed between the primary and secondary windings. Compliance with this provision protects against shock hazards should a fault develop between the primary and secondary windings. Faraday shielding provides electrical isolation between the high-voltage primary and low-voltage secondary windings of these transformers. As a secondary benefit, Faraday shielding of control transformers assures that transients occurring on the primary circuit are not transferred to the secondary circuit. Such transients could cause premature damage to electrical control equipment and create an economic burden for the mining industry.

This rule requires Faraday shielding for control transformers located in both explosion-proof and nonexplosion-proof motor-starter enclosures that are presently used by the mining industry. Also, this rule requires Faraday shielding for control transformers that supply motor-starter compartments, even if the control transformer is located in a separate power center. This rule does not cover control transformers for power centers that do not supply power to the motor-starter enclosure.

Paragraph (d) also requires the secondary nominal voltage of the control transformer be no more than 120 volts, line-to-line. This is consistent with the existing policy interpretation of 30 CFR part 18 control voltage limitations under § 18.47. There were no comments on this paragraph and therefore, the wording remains the same as the proposed rule.

Paragraph (e) of the final rule, like the proposed rule, requires test circuits to verify the integrity and proper operation of the ground-wire monitors and ground-fault protective devices. Test circuits for ground-wire monitors and ground-fault circuits assure that the circuits can be tested frequently in a manner that minimizes the hazards to personnel conducting the tests. Incorporating these test circuits into the longwall circuitry eliminates the need to test these protective devices by other means that could result in a shock hazard by placing personnel in close proximity to exposed energized conductors.

Some commenters noted that the testing of backup ground-fault devices located across the grounding resistor would require the application of an actual phase-to-ground fault, which could be hazardous. These commenters suggested that the ground-fault test circuit inject a primary current into the transformer and not subject the equipment to an actual phase-to-ground fault. In addition, another commenter supported the opinion that it is a dangerous practice to test ground-fault protection by making direct connections between phase and ground, and stated that MSHA should establish a policy on this so that the matter is resolved.

In response to these comments, unlike the proposed rule, the final rule includes a requirement that each ground-fault test circuit be designed to inject a primary current of 50 percent or less of the maximum ground-fault current through the current transformer to cause the corresponding circuit-interrupting device to open. This requirement is necessary to reduce the likelihood of a hazardous condition resulting from a phase-to-ground fault. A similar requirement is added to the final rule under 30 CFR 75.814(c).

Paragraph (f) of the final rule requires each longwall motor-starter enclosure, with the exception of a controller on a shearer, to be equipped with a disconnect device. Opening of the device deenergizes all high-voltage power conductors extending from the enclosure, except the conductors supplying power to the enclosure. Compliance with this paragraph provides for convenient and safe deenergization of high-voltage circuits and other components during testing and troubleshooting work, thus minimizing shock hazards.

A joint industry commenter suggested that the word ''incoming'' be inserted before the phrase ''disconnect device''. MSHA believes this is implied, since the device must deenergize all high-voltage power conductors extending from the enclosure. Therefore, the language of final rule remains as proposed.

Paragraph (f)(1) of the final rule, like the proposed rule, specifies that a single handle provide for simultaneous operation through a mechanical connection of multiple switches located within an enclosure. The simultaneous operation of multiple disconnect devices by the use of a single handle ensures that all high-voltage conductors extending from the enclosure are deenergized when the disconnect device is in the open position. This arrangement ensures that personnel entering other enclosures are protected from a shock hazard resulting from accidental contact with energized circuits in the event the wrong circuit is disconnected.

The words ''isolator switch'' and ''switches'' were removed in the final rule to minimize confusion. There were no comments on this paragraph and the language in the proposed rule remains unchanged except for the above clarifications.

Paragraph (f)(2) of the final rule, like the proposed rule, further defines the requirements of a disconnect device. The switch must be rated for the maximum phase-to-phase circuit voltage of the system. The ability to verify, by visual observation, that the switch's contacts are opened is also required. This verification must be determined without the removal of any enclosure cover. The removal of an enclosure cover to verify opening of the contacts presents an increased shock hazard to miners because of exposed energized high-voltage components.

Also included under this paragraph are the requirements that all load-side power conductors be grounded and the device be provided with a means to be locked when the device is in the ''open'' position. These requirements guard against the hazard of maintenance personnel being exposed to high-voltage energized parts due to residual voltage or inadvertent energization of the circuit.

The final requirements of this paragraph address the interrupting capability of the disconnect device. A disconnect device installed in an explosion-proof enclosure must be designed and installed to cause the current to be interrupted automatically prior to the opening of the device. This requirement addresses the concern about an explosion-proof enclosure failure because of an increased pressure rise. This pressure rise can result when an arc or methane explosion occurs within the explosion-proof enclosure. When the enclosure is not explosion-proof, as in outby switching, the device is required to either be installed in the circuit so that the circuit is automatically interrupted prior to the opening of the device or the device is required to be capable of interrupting the full-load current of the circuit. There were no comments on this paragraph and the language in the proposed rule remains unchanged in the final rule.

Paragraph (g) of the final rule addresses the interlocking of the disconnect device. These interlocking requirements reduce shock hazards by increasing the probability that the high-voltage circuits will be isolated and deenergized prior to performing testing and troubleshooting on the low- and medium-voltage circuits and ensure that high-voltage circuits may only be energized at the proper time following this activity.

This rule covers both explosion-proof and nonexplosion-proof motor-starter enclosures that are presently used by the mining industry. MSHA's policy has been to interlock disconnects with the control circuit in both power centers and motor-starter enclosures. If a motor-starter enclosure is part of a power center, then this rule covers the power center. This rule does not apply to separate power centers that supply power to motor-starter enclosures. The mining industry presently provides this interlocking of the disconnect device for power centers. MSHA encourages the industry to continue to interlock disconnects with the control circuits to facilitate troubleshooting and testing high-voltage circuits and equipment while the high-voltage circuits are disconnected. This maintains the existing level of protection because the interlock disconnects provide an additional safeguard against inadvertent exposure to energized high-voltage circuits.

One commenter noted that the proposed rule calls for deenergizing the incoming high-voltage circuit if the normal/test auxiliary switch is not in the normal position while closing the main circuit-interrupting device and the disconnect device (isolator switch). This commenter stated that this requirement would necessitate a retrofit in existing longwall controllers since the normal/test switch must be in the normal position when the disconnect switch is closed in order for the control circuit to function at all. This would prohibit the closing of the circuit-interrupting device and would disable the control circuitry. With the disconnect device in the open/grounded position, the test circuitry cannot be used unless the normal/test switch is in the test position. The commenter further indicated that, in either case, the incoming high voltage does not present a hazard.

Other commenters recommended that the control circuits within each high-voltage motor-starter enclosure be interlocked with the disconnect device, except for the controller on a shearer, so that the control circuit can be powered with an auxiliary test switch when the disconnect device is in the open and grounded position; and the disconnect device cannot be closed without de-energizing the incoming high-voltage circuit unless the auxiliary test switch is in the normal operating position. These commenters stated that, in many cases, it is necessary to close the main circuit-interrupting device with the auxiliary switch in the test position.

MSHA has carefully reviewed and considered these comments. The final rule retains the requirement that the control circuit for high-voltage motor-starters can only be energized through an auxiliary test switch when the disconnect switch is open and the load power conductors of the high-voltage circuit are grounded. The proposed requirement that neither the main circuit-interrupting device nor the disconnect device can be closed without deenergizing the incoming high-voltage circuit unless the auxiliary test switch is in the normal operating position, has been replaced with a requirement which more clearly states the expected performance of the control interlock circuit. The final rule requires high-voltage control circuits to be interlocked so they can be energized only when the disconnect switch is either in the ''closed'' or the ''open and grounded'' positions. High-voltage control circuits may not be operated in any other intermediate positions of the disconnect switch or auxiliary switch. This requirement will prevent unintentional energization of high-voltage components. The control circuit can be energized only when the disconnect switch is ''open and grounded'' with the auxiliary switch in the ''test'' position, or when it is closed with the auxiliary switch in the ''normal'' position. MSHA has not included language in this paragraph to specifically exclude the controller on a shearer from these interlock requirements, as suggested by some commenters. Shearers are not required to be equipped with a disconnect device as stated in § 18.53(f) of this final rule and MSHA does not intend that this provision be applicable to shearers. Therefore, except for the above stated clarifications, the final rule remains as proposed.

Paragraph (h) of the final rule requires that the electrical protection be set at an appropriate value to provide protection for the size and length of the longwall motor and shearer cable used, based on an ''available fault current'' study that must be submitted to MSHA. Proper electrical protection is essential in preventing a fire, explosion or shock hazard resulting from inadequate sizing of electrical cables.

Appendix I of existing 30 CFR part 18 includes maximum trailing cable protective device settings and trailing cable length restrictions as specified in Table 8 and in Table 9. These have, in the past, been used as guidance in evaluating cables on longwalls rated at less than 1,000 volts. Under this final rule and consistent with agency policy, the length restrictions and device settings do not apply to high-voltage longwall motor and shearer cables. The procedures used in evaluating high-voltage longwalls cables and settings include a review of the applicant's fault-current study to determine the minimum expected short-circuit currents available at the farthest projected installation in the electrical system.

This paragraph of the final rule has been clarified, in response to a proposed 1989 electrical rule comment, to indicate that trailing cables would also be included in the required evaluation to ensure adequate protection for the length and conductor size of all cables, including longwall motor, shearer and trailing cables. However, MSHA does not intend to specify a fixed maximum setting for short-circuit protective devices, as noted by the commenter. MSHA intends to be flexible by assessing each installation individually. The submitted fault study is the basis in determining the settings, and for permitting higher trailing cable circuit protective device settings and cable lengths than specified by 30 CFR part 18. MSHA recognizes that it is practical to design longwall systems with higher circuit protective device settings and longer cable lengths in order to lessen economic burdens on the mining community while preserving safety and health protections for miners. Some commenters noted that the fault study is unique to each mine and that this requirement should not be included in 30 CFR part 18. They suggested that the regulation is more suitable for inclusion in part 75. MSHA disagrees. In order for a longwall mining system to be safely designed, the designer must know the parameters under which the longwall will be operated. These parameters would include available fault currents. The final rule requires that this information be provided to MSHA to determine whether cables are adequately protected. Historically, longwalls are custom-made systems and are not designed for more than one mining company. The fault study should take into account worst-case projections (i.e., longest cable lengths, smallest Kilo-Volt Amperes (KVA) Power Center). Enforcement personnel will also use this information to ensure compliance with § 75.518–1—*Electric equipment and circuits; overload and short circuit protection; minimum requirements.* Except as clarified above, the final rule remains as proposed.

Paragraph (i) of the final rule requires all longwall motor and shearer cables with nominal voltages greater than 660 volts to have a cable construction with a grounded metallic shield around each power conductor. This regulation requires the incorporation of the grounded shield around each power conductor providing additional personnel protection against shock and electrocution hazards. This is necessary because any cable faults would cause phase-to-ground short-circuit currents to flow. An extra level of protection is achieved because the phase-to-ground short-circuit currents, unlike the phase-to-phase short-circuit currents that may flow from faults in other cable constructions, are limited in magnitude by the grounding circuit components.

Some commenters suggested that these cables should be assembled with a grounded shield around each power conductor but that the shield should not be specified as metallic since these power systems restrict ground-fault current to reduced values and the cables are constantly flexed. They believed that an improved cable could be developed with a nonmetallic shielding material around each power conductor. In response to this comment, MSHA believes that this technology has not been demonstrated or shown to provide equivalent safety in underground coal mines. Although MSHA supports the application of new technology, questions such as splicing reliability would need to be addressed before incorporating these types of cables on longwalls. If a reliable system using this type of cable were developed and equivalent safety were demonstrated, it could be addressed under existing §§ 18.20(b)—*Quality of material, workmanship, and design* and/or 18.47(d)(6)—*Voltage limitation* through the construction and design requirements for MSHA approval. The final rule has not been modified, as suggested by commenters, and remains as proposed.

Paragraph (j) of the final rule specifies that high-voltage motor and shearer circuits be provided with instantaneous ground-fault protection set at not more than 0.125-amperes. The current transformers (CT) used for ground-fault protection are required to be of the single window-type and installed to encircle all three phase conductors. This will provide highly sensitive and responsive ground-fault detection systems, using new technology such as solid state relays, for high-voltage circuits supplying electric face equipment. The protective devices are required to operate instantaneously when exposed to ground faults that exceed the trip setting of the ground-fault protective device. Therefore, compliance with this standard will greatly reduce the likelihood of fires and shock hazards that result from ground faults on the high-voltage circuits or equipment.

The use of the single window-type current transformer encircling all three phase conductors is the most reliable method for detection of ground faults in mine power systems. This type of relaying (zero-sequence) is not affected by CT error and gives very sensitive tripping. This scheme is widely used in mining at all voltages. Requiring all three phase conductors to be encircled by the CT prohibits the equipment safety grounding conductors from passing through or being connected in series with the CT. If the safety grounding conductor passes through or is connected in series with the CT, it is possible for the fault currents to flow through parallel paths, thereby reducing the reliability of the ground fault protection.

Some commenters suggested that if the full-load current of the circuit exceeds 200 amperes, the instantaneous ground-fault protection be set at not more than 0.200-amperes. They stated that it is very difficult to produce ground-fault current transformers that can reliably discriminate between small ground-fault currents and larger motor starting currents and that when the full-load current of a circuit exceeds 200 amperes, it is reasonable to expect motor starting currents in excess of 2,000 amperes. They asserted that a small increase in the setting of the ground-fault protection is justified for certain high-current circuits and that the suggested 0.200-ampere setting would still be less than 40 percent of the maximum ground-fault current. They noted that the specification of the current transformers is very rigid and stated that the regulation should allow for new technology if it can provide equal or improved protection. In relation to ground-fault protection, a commenter focused on MSHA's statement that zero sequence type relaying ''is not affected by CT error.'' The commenters stated that, in their experience, erroneous signals are produced in the CT's if the current levels are sufficiently high. They noted that when starting currents flowing in the power circuit are in excess of 2000A it is possible that an ''error current'' exceeding 100mA may be fed to the relay, causing nuisance tripping. For this reason, it is their belief that the relays on the power center output cables to the longwall controls are now set to a higher current of 200–300mA and these cables carry the combined starting currents of two or three motors. They concluded that as a result, when the size of individual motors gets larger, this problem will be experienced on motor cables.

MSHA has reviewed these issues and determined that reliable, sensitive ground-fault protective devices are commercially available and that they have been successfully used to correct the problems described by the commenters. These devices can safely and reliably operate at 0.125-ampere or

less. The use of a single window-type current transformer to encircle only the three phase conductors assures that sensitive ground-fault devices will detect all ground faults exceeding the setting of the device. Detection devices inserted in the ground wire may not detect all ground-fault currents and could compromise the integrity of the ground circuit. Therefore, the final rule has not been modified and remains as proposed.

Paragraph (k) of the final rule, like the proposed rule, requires safeguards against corona to be provided on all 4,160 volt circuits in explosion-proof enclosures. Corona is a luminous discharge that occurs around electrical conductors that are subject to high electrical stress. One danger inherent with high-voltage equipment is that excessive electrical stress can cause premature breakdown of insulating materials, which could result in arcing, thus creating an explosion hazard in the presence of corona. Corona usually doesn't present a hazard until voltage of 8kV are reached. However, even at 4,160 volts, safeguards should be taken. This would include using cables with a corona resistant insulation such as ethylene propylene, to avoid small nicks or cuts in the cable insulation and to minimize high-voltage transients. This provision is not intended to require stress cones or similar termination schemes. There were no comments on this paragraph. The final rule has not been modified and remains as proposed.

Paragraph (l) of the final rule, like the proposed rule, requires limiting the maximum explosion pressure rise within an enclosure to 0.83 times the design pressure for any explosion-proof enclosure containing high-voltage switchgear. This requirement protects against explosion hazards that may arise from the effects of a sustained high-voltage arcing fault. This arcing fault may significantly contribute to the pressure rise created in an explosion-proof enclosure during an internal methane-air explosion. Research conducted by the former U.S. Bureau of Mines and MSHA on effects of high-voltage arcing in explosion-proof enclosures concluded that this potential increased pressure rise can be safely addressed through a combination of designing the enclosure for the increased pressure and providing electrical protective devices set to deenergize the incoming circuit before the pressure rise becomes excessive. This provision requires that the maximum explosion pressure rise must be limited to a value that can be safely contained within the explosion-proof enclosure (83 percent of the design pressure). The final rule's performance-oriented language permits compliance through any achievable means. Protective methods used in previously issued approvals and experimental permits consisted of electrical devices with rapid clearing times. However, the rule provides for flexibility and permits alternative methods that may provide equal protection, such as pressure switches or special pressure release devices. There were no comments on this paragraph. The final rule remains as proposed.

Paragraph (m) of the final rule, like the proposed rule, requires that high-voltage electrical components located in high-voltage explosion-proof enclosures cannot be coplanar with a single-plane flame-arresting path. This protective measure will further prevent the heat or flame from an arc or methane explosion in an explosion-proof enclosure from igniting a methane-air mixture surrounding the enclosure. This requirement addresses the possibility of conductor material particles being expelled from the enclosure through the flame-arresting path. Particles of molten material are emitted from the conductors whenever a short-circuit occurs. Expulsion of these particles from the enclosure can occur if their source is in the same plane as the flame-arresting path and a pressure rise coincides with the short circuit. Once these particles are expelled from the explosion-proof enclosure, they can ignite an explosive atmosphere should one be present. This possibility does not arise with multi-plane flame-arresting path surfaces because a deflection in the path would prevent ignitions by expelled particles. There were no comments on this paragraph. The final rule remains as proposed.

Paragraph (n) of the final rule, like the proposed rule, addresses MSHA's concern with the decomposition of insulating materials due to tracking. In the presence of surface contaminants, small levels of current can flow between conductors. As the currents flow, the insulation may carbonize and produce conducting tracks. The conducting tracks may grow progressively across the surface eventually bridging between conductors and causing complete breakdown. Using insulation with an adequate Comparative Tracking Index (CTI) rating can prevent tracking, thus minimizing potential arcing that could lead to an explosion hazard. Paragraph (n) requires that rigid insulation between high-voltage terminals or between high-voltage terminals and ground be designed with creepage distances in accordance with the table labeled ''Minimum Creepage Distances'' included in this section. The required creepage distances are determined based upon the phase-to-phase use voltage and the CTI of the insulation to be used. Creepage distance is based in part on the CTI of the electrical insulating material. An appropriate method of determining the CTI of the electrical insulating material is described in the American Society for Testing and Materials Standard, ASTM D3638 ''Standard Test Method For Comparative Tracking Index of Electrical Insulating Materials.'' The MSHA derived creepage distances in the table are consistent with most commercially available high-voltage components to which this provision applies. There were no comments on this paragraph. The final rule remains as proposed.

Paragraph (o) of the final rule addresses a requirement for Minimum Free Distance (MFD) within an explosion-proof motor-starter enclosure. MSHA's Internal Engineering Report Number 87021701 (available in the rulemaking record) determined that if phase-to-phase arcing occurred, there may be adequate arc energy to heat the walls of the enclosure beyond the safe working temperature. This could cause failure of the enclosure and create an explosion hazard. Distances between the wall or cover of an enclosure and uninsulated electrical conductors inside the enclosure were established to prevent wall or cover damage from phase-to-phase arcing.

Some commenters suggested that the last sentence of the proposed paragraph (o) be revised as follows: ''If a grounded ¼-inch thick steel shield is installed between the area of potential arcing and the adjacent wall/cover area, the minimum free distance requirement is satisfied.'' MSHA believes that this comment was based on a footnote present in the part 18 approval criteria established by MSHA for high-voltage equipment containing on-board switching of high-voltage circuitry. This criteria indicates that the specified MFDs may be reduced if a ¼″ thick steel shield is used between the area of potential arcing and the adjacent wall/cover area. Since this footnote did not cite a MFD or qualify the circumstances under which this shield could be used, MSHA did clarify this criteria exception in the proposed rule, and the final rule remains unchanged with respect to this clarification. A commenter also stated that a steel shield could be mounted in conjunction with an aluminum wall or cover to reduce the required minimum free distance and that the thickness of this steel shield would be used to determine the required minimum free

distance. MSHA has determined that a ¼″ thick steel shield, mounted to maintain a minimum electrical clearance, as suggested by the commenter, would not provide sufficient protection if a phase-to-phase arc occurred. The final rule also permits the use of steel shields greater than ¼″ thick to provide for flexibility and diversification in enclosure design.

Some commenters noted that the proposed regulation classified all enclosures in one of two groups: those with short-circuit currents less than 10,000 amperes and those with short-circuit currents between 10,000 and 20,000 amperes. It was their view that because of the substantial increase in minimum free distance between these groups, MSHA should permit a manufacturer to calculate the appropriate MFD when the short circuit current is between 10,000 amperes and 20,000 amperes. They also recommended that MSHA include a provision that would permit the minimum free distances to be revised based on future research in this area. Finally, they noted that the MFD for a 1-inch thick cover under Column A was omitted.

In response to these comments, MSHA has revised the Minimum Free Distance Table by adding minimum free distance information for short-circuit currents of 15,000 amperes. Additionally under the final rule in paragraph (o)(1), MSHA allows for values not presented in the table provided that they meet the specific engineering formulas on which the table is based. These formulas were developed by MSHA engineers with standard engineering calculations using data obtained from high-energy arc testing. This testing was performed during Foster-Miller research, under USBM Contract No. H0308093. The MSHA research reports and data are part of the rulemaking record and are available for review.

Equipment approved under these circumstances will be limited to equipment used only with power systems that do not generate short-circuit currents that exceed the design parameters used for establishing minimum free distance. In addition, MSHA will consider the use of shields constructed with alternate materials and the use of alternate techniques and methods that preclude the possibility of high-energy arcs heating the walls of explosion-proof enclosures beyond safe working temperatures. If upon evaluation, equivalent safety is demonstrated, MSHA will address these technological advances and the results of additional research in this area, if warranted, under §§ 18.20(b) and/or 18.47(d)(6). MSHA intentionally omitted the MFD value for a 1″ thick steel wall/cover under Column A to minimize confusion. MSHA calculated this value to be 0.3″, which is less than the minimum electrical clearance that must be maintained under § 18.24 for high-voltage equipment. As indicated above, the proposed rule has been modified in part, and adopted in part.

Paragraph (p) of the final rule, like the proposed rule, requires a static pressure test to be performed on each prototype design of explosion-proof enclosure housing high-voltage switchgear prior to explosion tests. The manufacturer is also required to use this test as a routine test on every explosion-proof enclosure housing high-voltage switchgear, at the time of manufacture, or follow an MSHA accepted quality assurance procedure covering the inspection of the enclosure. These quality assurance procedures must include a detailed check of parts against the drawings to determine: (1) That the parts and the drawings coincide and (2) that the minimum requirements stated in 30 CFR part 18 have been followed with respect to materials, dimensions, configuration and workmanship.

MSHA is concerned about the specified design pressure of an enclosure. Presently, an enclosure that is designed for 150 pounds per square inch gauge (PSIG) is tested with a methane explosion. Normally, these pressures do not exceed 100 pounds per square inch (PSI). Since the protective method to prevent over-pressurization in these enclosures would be directly related to the design pressure, MSHA has developed the static pressure test with its acceptable performance criteria to ensure each enclosure design would be capable of withstanding its design pressure. By requiring static pressure testing on each enclosure prototype, MSHA believes that the adequacy of enclosure design would be verified. Additionally, to require either subsequent static pressure testing on each enclosure manufactured or an acceptable quality assurance program guarantees the integrity of later manufactured units.

The static test procedure specifies that the enclosure be internally pressurized to a pressure no less than the design pressure, with the pressure maintained for a minimum of 10 seconds. Following the pressure hold, the pressure is removed and the pressurizing agent removed from the enclosure.

Acceptable performance criteria are provided in this final rule. Acceptable performance is achieved if the enclosure, during pressurization, does not exhibit leakage through welds or casting or rupture of any part that affects the explosion-proof integrity of the enclosure. Further, the enclosure, following removal of the pressurizing agents, must not exhibit visible cracks in welds, permanent deformation exceeding 0.040 inches per linear foot, or excessive clearances along flame-arresting paths following retightening of fastenings, as necessary. Any of the above conditions would constitute unacceptable performance.

There were no comments on this paragraph. However, the final rule is modified to clearly state the type and nature of quality assurance inspections that qualify as an MSHA accepted quality assurance procedure.

Part 75 Mandatory Safety Standards—Underground Coal Mines

The final rule revises existing standard § 75.1002—*Location of trolley wires, trolley feeder wires, high-voltage cables and transformers,* and adds §§ 75.813 through 75.822 to set out additional safety precautions that allow the use of available technology. These new safety precautions address the use of high-voltage longwall equipment in face (production) areas. As stated earlier, MSHA previously included these safety precautions in petitions granted for § 75.1002. Based on its experience with petitions for modification, the agency expects the final rule to improve safety for underground coal mining.

Under the final rule, the risk of injury related to lifting and handling of cables should be reduced since the use of high-voltage cables can reduce the weight and size of a cable used in longwall face systems.

The final rule also provides the following protection against fire, explosions, and/or shock hazards:

(1) Improved short-circuit and ground fault protection;

(2) A means to easily test the effectiveness of ground fault protection;

(3) Use of manufactured cable support systems for cables extending from the power center to the headgate;

(4) Use of insulated cable-handling equipment;

(5) Use of protective gloves to troubleshoot and test low- and medium-voltage circuits associated with high-voltage circuits;

(6) Use of additional protection for cables at points where cables leave support systems;

(7) Use of more improved ''quick handle'' disconnect devices for the purpose of performing work; and

(8) The use of barriers and interlock switches to help guard against contact

with energized circuits. The final rule requires the use of cables containing metallic shielding (SHD) around each power conductor.

Many of these final rule safety improvements are required conditions for granted modifications of § 75.1002. However the final rule, like the proposed rule, provides two additional requirements. These are gloves for troubleshooting and testing, and test circuits for ground-fault protection.

The final rule, in response to commenters' suggestions, also provides two provisions not included in the proposed rule, §§ 75.814(e) and 75.822. Section 75.814(e) requires a single circuit interrupting device for cables connected in parallel or permits parallel circuits-interrupting devices to protect parallel cables when the parallel circuit-interrupting devices are electrically and mechanically interlocked. Section 75.822 allows the use of No. 16 AWG ground-monitor conductors. These additional provisions are a logical outgrowth of the proposed rule and notice and comment process, reflecting the primary purpose of the proposed rule by allowing the use of high voltage on longwalls in a safe and efficient manner. The new provisions are in response to specific joint industry and labor comments received about parallel circuit use, and industry comments about the size of ground-check conductors. These additional provisions permit the use of high-voltage longwall systems that are safe, effective and efficient and reflect the mining community's experience with granted modifications. The ground-monitor conductor size and the multiple parallel circuit provisions are not requirements but are offered to give flexibility to mine operators to use available technology and to minimize cost burdens where feasible.

Section 75.814(e) of the final rule requires that multiple (parallel) circuits be protected by a single circuit-interrupting device rather than parallel connected circuit-interrupting devices, except when parallel devices are mechanically and electrically interlocked. This requirement is based on MSHA electrical safety experience, and experience in granting high-voltage longwall petitions for modification, and is consistent with requirements under nationally recognized consensus standards. Although multiple parallel circuits are not necessary for safe high-voltage longwall systems, they do present certain safety and cost efficiency advantages to some longwall high-voltage systems as demonstrated under MSHA's and the mining industry's petition experience. Higher currents can be used without increasing voltage levels which helps minimize cable over-heating and reduces cable insulation deterioration. Multiple parallel circuits in these systems are a logical option that resulted from this high-voltage longwall petition experience. As noted above, industry and labor suggested multiple parallel circuit use during the rulemaking comment process.

Section 75.822 allows the use of high-voltage longwall cables with a minimum No. 16 AWG center ground-monitor conductor. This provision eliminates the need for petitions for modification of § 75.804(a). It allows the use of improved high-voltage cable designs that provide increased protection against fire and shock hazards. It reduces inter-machine arcing from induced currents which can result in an ignition hazard. The cable designs were initially developed for high-voltage longwall equipment under previously granted petitions.

The cable design requirements were also requested by labor and industry during the comment period of the proposed rule. Since 1992, under MSHA-approved petitions, these cable designs have been safely used.

These new requirements not only permit multiple parallel cable use and the use of No. 16 AWG ground-monitor conductors but also minimize industry paperwork requirements. With this new technology, the final rule results in improved safety and savings for both the mining community and MSHA. Cable replacement and maintenance costs will be reduced. Also, mine operators will not need to file petitions for modification; therefore, costs associated with the petition process will be eliminated. Legal costs are incurred by all segments of the mining community in the administrative review process associated with petitions. Agency costs associated with publication, processing, investigation and review of high-voltage longwall petitions will also be eliminated.

The final rule increases safety protections and does not reduce the protections currently afforded miners.

Section 75.2 Definitions

The definitions in this section are key to proper interpretation of the electrical standards. Upon review, the Agency concluded that these definitions should also be used to describe these terms wherever they appear in 30 CFR part 75 and proposed such an approach. This approach will provide clarity and consistency in the use of these terms where they appear in all underground safety standards. All underground coal mine operators and miners representatives were sent copies of these proposed definitions as part of the complete longwall high-voltage proposed rule. There were no comments opposing this approach.

The definitions are derived from consensus standards, including the Institute of Electronic and Electrical Engineers, *The New Standards Dictionary of Electrical and Electronics Terms—Standard 100–1992, and the National Electrical Code (NEC).* Definitions found in 30 CFR part 18 of MSHA's regulations were also used as a source for this final rule. In some instances, definitions taken from these sources were changed to apply to electric circuits and equipment used in the coal mining industry.

MSHA proposed that the term ''adequate interrupting capacity'' be defined as the ability of an electrical protective device to safely interrupt all values of current which can occur at its location in excess of its trip setting or melting point. A commenter suggested that this term be defined as the ability of an electrical protective device, based upon its required and intended application, to safely interrupt values of current in excess of its trip setting or melting point. MSHA agrees and has changed the proposed definition to reflect this suggestion. This commenter suggested that the proposed definition would cause a problem, since in motor-starter enclosures of the type presently used for high-voltage longwalls, short-circuit protection is provided by a single circuit breaker common to all motor circuits, whereas overload, ground fault, and ground-monitor protection trips individual motor contactors. According to this commenter, this could result in the interruption of the intended protected circuits at a higher current value than was intended or required for that circuit, therefore, affording less protection against overheating, shock and fire hazards. The commenter further suggested that in applying the revised definition, the short-circuit relay signals the circuit breaker to interrupt the short-circuit current, whereas the ground-fault relay signals the contactor to interrupt the restricted ground-fault current. Under the final rule, adequate interrupting capacity is determined by comparing the interrupting rating of the device with the actual characteristics of the circuit to be protected. Thus, interruption of the circuit occurs at the current rating required or intended for that circuit rather than all values of current which can occur at its location.

The final rule defines ''approval documentation'' to mean formal papers issued by the Mine Safety and Health Administration which illustrate and

describe the complete assembly of electrical machinery or accessories that have complied with the applicable approval requirements of 30 CFR part 18. The rule retains the meaning of the proposed rule but, for clarification purposes, replaces ''formal document'' with the words ''formal papers'' and the verb ''document'' with the words ''describe and illustrate''. The proposed language was also changed to accurately reflect that ''approval documentation'' refers to those papers that illustrate and describe equipment meeting the ''applicable requirements of 30 CFR part 18.'' This change clarifies that approval documentation must be submitted under part 18. MSHA received no comments in regard to this definition.

Like the proposed rule, the final rule defines ''circuit-interrupting device'' as a device designed to open and close a circuit by nonautomatic means and to open the circuit automatically at a predetermined overcurrent value without damage to the device when operated within its rating. The Agency received no comments on this definition and it is unchanged from the proposed rule. This definition clarifies that circuit-interrupting devices be designed for manual closure rather than automatic, to protect against safety hazards which could result in severe bodily injury and death if unexpected automatic energization of equipment were to occur. Conversely, the device must be capable of opening the circuit automatically upon the occurrence of an electrical fault. The rating of the device must be at a value that would protect the device from damage during the automatic deenergization of the circuit.

''Ground fault or grounded phase'' is defined to mean an unintentional connection between an electric circuit and the grounding system. MSHA received no comments on this definition and it remains unchanged from the proposed rule.

Like the proposed rule, the final rule defines ''motor-starter enclosure'' to mean an enclosure containing motor starting circuits and equipment. This term describes equipment commonly used to house longwall motor-starting equipment. No comments were received on this definition and it remains unchanged.

Also like the proposed rule, the final rule defines ''nominal voltage'' to mean the phase-to-phase or line-to-line root-mean-square value assigned to a circuit or system to conveniently designate its voltage class, such as 480 or 4,160 volts. The definition clarifies that the actual operating voltage of a system or circuit may vary from its nominal voltage within a range that permits satisfactory operation of equipment. The Agency received no comments on this definition and it has not been changed.

The final rule, like the proposed rule, defines ''short circuit'' to mean an abnormal connection of relatively low impedance, whether made accidentally or intentionally, between two points of different potential. There were no comments on this definition so it remains unchanged.

Definitions of low voltage, medium voltage, and high voltage were inadvertently included in the proposed rule. No comments were received on these definitions. These terms are defined in existing rules and are not addressed in this final rule.

One commenter suggested that ''cable handling and support system'', a phrase used frequently in § 75.817—*Cable handling and support systems,* should be defined. Section 75.817 contains the performance goals that cable handling and support systems must achieve, by minimizing the possibility of miners coming into contact with cables and protecting the high-voltage cables from damage. The Agency does not believe that a definition is necessary for this term. Specifically defining a cable handling and support system would limit operator flexibility with respect to cable handling and support systems that may be designed in the future and provide equal or greater safety protection. Cable handling and support systems are understood by the plain meaning of the words.

Section 75.813 High-Voltage Longwalls; Scope

Section 75.813 describes the scope of this final rule; it identifies new §§ 75.814 through 75.822 as electrical standards that apply only to the use of high-voltage longwall circuits and equipment. The final rule, unlike the proposed rule, expands the scope to include new § 75.822. As explained below, § 75.822 is included in the final rule in response to a comment regarding the size of ground-monitor conductors in cables. This provision also eliminates the need for petitions for modification related to ground-monitor conductor size. This section also clarifies that all other existing standards in 30 CFR that are applicable to the use of high-voltage longwall circuits and equipment continue to apply. For example, safety standards, such as grounding and ground-monitor requirements contained in subparts H and I of part 75 that are currently applicable to high-voltage installations are also applicable to high-voltage longwall equipment.

Some commenters suggested that an exception should be made in the standard for shearing machines that have been previously evaluated by MSHA under part 18, using non-high-voltage criteria. However, such an exemption would exclude shearing machines from the general safety requirements contained in the final rule. Safety requirements pertaining to electrical work, such as troubleshooting and testing, and installation, examination and maintenance, contain provisions that apply to all equipment on the high-voltage longwall, including shearing machines. Other provisions relating to disconnect devices and cable handling and support systems are applicable to the equipment they address. Therefore, the Agency does not believe that a general exemption for shearing machines would promote safety.

Section 75.814 Electrical Protection

This section of the final rule is derived in part from existing §§ 75.518–1—*Electric equipment and circuits; overload and short circuit protection; minimum requirements*, 75.800—*High-voltage circuits; circuit breakers*, and 75.800–2—*Approved circuit schemes* and addresses electrical protection methods for longwall equipment supplied by high-voltage systems. The effects of ground faults, electrical arcing, heating of conductors, and short circuits can have adverse consequences to the safety of miners. Effective electrical protection for longwall equipment will reduce the potential for ignitions, fires, and miner exposure to energized equipment frames. The final rule incorporates the latest technology and provides increased worker protection for high-voltage longwall mining equipment.

Paragraph (a) of the final rule addresses requirements for short-circuit, overload, ground fault, and undervoltage protection for high-voltage cables extending from the section power center, the shearer motor cable(s), and the remaining motor cables. Short-circuit and overload protection prevent damage to cables and motors due to overheating. Ground-fault protection minimizes the risk of shock injuries and ignition hazards to miners. Under-voltage protective devices prevent automatic restarting of equipment following a loss of power.

The final rule also requires circuit-interrupting devices for high-voltage circuits that supply power to longwall equipment be properly rated to safely interrupt the current to which it may be exposed without damage. The adequacy of the circuit-interrupting device assures that the device will remain undamaged by overcurrents and faults in the system.

One commenter requested clarification regarding whether vacuum contactors can be used to provide ground-fault and overload protection since some have been approved for use on longwall controllers. Vacuum contactors are a vacuum sealed system as opposed to a circuit breaker, which interrupts the arc in air or oil. The final rule permits the use of vacuum contactors as long as these contactors meet the definition of a ''circuit-interrupting device.''

Some commenters submitted sketches of high-voltage longwall circuits, and requested an evaluation of whether the circuits would comply with the standard. It is beyond the scope of this rulemaking for MSHA to evaluate and approve such submissions. Systems and wiring designs can vary from mine to mine and from section to section within the same mine, depending on factors such as control circuit configuration, load terminations, and available fault current. MSHA will evaluate these designs on a case-by-case basis as mine operators plan to implement high-voltage longwalls at their mines and during the approval process under the applicable 30 CFR part 18 provisions.

Paragraph (a)(1) of the final rule, like the proposed rule, specifies a current setting for short-circuit protective devices. The devices, whether located in the section power center or the longwall motor-starter enclosure, are required to be set at the lower value of either the setting specified in the approval documentation pertaining to the longwall system, or 75 percent of the minimum available phase-to-phase short-circuit current. The short-circuit current settings specified during MSHA's approval process are based on the calculation of fault currents at various key locations in the system.

The results of a 1992 Agency study of fault current levels in 30 high-voltage longwall systems indicate that phase-to-phase short-circuit currents range between 1,500 and 9,000 amperes at the various motor locations. (A copy of this study is available as part of the record.) Therefore, current (ampere) settings of 75 percent of the minimum phase-to-phase short-circuit currents will establish maximum limits for trip settings of short-circuit current devices. As equipment is used and moved from one location to another in a mine, changes take place in both the equipment and electrical system that indicate a need for a change in settings for short-circuit protective devices. Some commenters suggested that a statement be added to this provision indicating that the minimum available short-circuit current be determined by calculations and not by actual in-mine short-circuit tests.

To date, it has not been necessary to conduct in-mine testing for the purpose of making determinations of proper settings of short-circuit protective devices. However, the method used to make these determinations should not be restricted to calculations, since unusual or unanticipated conditions, such as high motor starting currents, may require in-mine testing.

Paragraph (a)(2) of the final rule specifies short-circuit time delay settings for protective devices. Short-circuit devices protecting cables extending from section power centers to motor-starter enclosures may incorporate time delays limited to the settings specified in the approval documentation or 0.25-second, whichever is less. This paragraph revises the proposed rule to allow short-circuit devices protecting motor or shearer circuits to incorporate intentional time delays. The time delays may be limited to the settings specified in the approval documentation, or up to three cycles (0.050-seconds), whichever is less. The purpose of permitting a time delay is to prevent nuisance tripping during motor starting. When high-voltage longwall equipment was introduced to the mining industry, nuisance tripping problems were experienced. This nuisance tripping was caused by motor starting currents. In order to solve these problems, it may be necessary to incorporate time delays into the short-circuit protective devices. Currently, electronic relays that have a time delay to override motor starting currents are commonly used to provide short-circuit protection for high-voltage longwall circuits.

The proposed rule allowed time delays for short-circuit devices protecting cables extending from power centers to motor-starter enclosures. The maximum value of the time delay was limited to the smaller of the value specified in the approval documentation or 0.25-second (15 cycles). However, the proposed rule did not provide for time delays to be incorporated into short-circuit devices protecting motor or shearer cables. The Agency specifically solicited comments regarding elimination of intentional time delays and allowing higher short-circuit settings based on system capacity.

One commenter stated that time delays between the longwall controller and section power center should be required to permit adequate coordination with downstream devices. According to the commenter, if there is a failure in the utilization circuit, for example, the crusher motor, it is advantageous for the failure to be cleared by the circuit-interrupting device in the controller, not the section power center which acts as a back-up. This commenter further stated:

(1) Without the presently permitted time delays, the fault would also deenergize the transformer, and more than likely, personnel would reenergize the circuitry to find the location of the fault in the system;

(2) This unnecessary closing in on a faulted circuit is eliminated when the circuits are properly coordinated; and

(3) Time delays should be kept as short as possible to provide adequate coordination.

Other commenters suggested that time delays be eliminated and higher short-circuit settings be allowed based on system capacity, provided that the Agency develops test scenarios to determine the safe time delay settings. These commenters stated that elimination of time delays would offer protection in the event of a direct fault because there would not be resistor strips (overloads) available to open the circuit and remove the power. They stated that inspections have revealed that, in some cases, resistor strips are either not operable, damaged, or have been by-passed.

After careful review of this issue, the Agency has concluded that the use of time delays and subsequent lower short-circuit settings would result in coordination (selective tripping) of circuit-interrupting devices. Proper coordination of circuit-interrupting devices can result in improved safety since faulted circuits can be more easily and safely identified and isolated for the purpose of troubleshooting, testing, and repair work. Commenters also suggested that time delay settings of short-circuit protective devices used to protect any cable extending from the section power center to a motor-starter enclosure not exceed the settings specified in approval documentation or 0.30-second (18-cycles), whichever is less.

This provision is not changed from the proposed rule. MSHA's experience has been that the maximum time delay for reliable coordination is 0.25-second (15-cycles). Further, a joint standard published by the American National Standards Institute (ANSI) and the Institute of Electrical and Electronics Engineers, Inc., entitled *IEEE Recommended Practice for Protection and Coordination of Industrial and Commercial Power Systems (IEEE Buff Book)—Standard 242–1986,* allows 0.25-second time-delay to ensure reliable coordination of short-circuit protective devices. Therefore, an increase to 0.30-second is not justified.

These commenters further suggested that short-circuit protective device settings, used to protect motor and shearer circuits, should be based on the maximum asymmetrical starting current with no intentional time delay or be based on the maximum symmetrical starting current with a time delay of no more than 0.050-second (three-cycles). These commenters pointed out that modern electronic short-circuit protective devices can be made to operate within one cycle (0.017-second). These devices will respond while the motor or shearing machine starting current contains an appreciable asymmetrical component and the asymmetrical component of the motor or shearing machine starting current will be negligible near 0.050-second. They suggested that introducing a 0.050-second time delay will permit a significant reduction in the setting of the short-circuit protective devices. Another commenter suggested that it is important to recognize the difference between asymmetrical motor starting currents that persist for two (0.033-second) to three cycles (0.050-second) following contactor closure, and motor starting currents that persist for several seconds. This commenter pointed out a need for two cycles time delay. MSHA agrees that there is a difference between asymmetrical motor starting currents and symmetrical motor starting currents which can last for several seconds.

Therefore, the final rule permits limited time delays to be used in conjunction with lower settings of short-circuit protective devices rather than higher settings of short-circuit protective devices without time delays. This should result in proper coordination and subsequent selective tripping of circuit-interrupting devices and prevent nuisance tripping of circuit-interrupting devices due to high motor starting currents. In response to comments, the Agency concludes that a time delay will be necessary to allow proper starting of motors. Therefore, this provision allows short-circuit devices protecting motor or shearer circuits to incorporate intentional time delays limited to the settings specified in the approval documentation, or up to three cycles (0.050-seconds), whichever is less.

Paragraph (a)(3) of the final rule, like the proposed rule, requires ground-fault currents to be limited by a neutral grounding resistor to not more than 6.5 amperes when the nominal voltage of the power circuit is 2,400 volts or less, or 3.75 amperes when the power circuit voltage is greater than 2,400 volts. Typically, the mining industry has used grounding resistors in resistance-grounded systems that limit the ground-fault current in a circuit to 0.50 to 1.00 ampere. MSHA encourages this practice to continue. The levels specified in the final rule allow new technology to detect lower ground-fault currents and reduces shock hazards. During ground-fault conditions, the grounding resistor will dissipate heat. The final rule limits the heat dissipation by the grounding resistors to a value equivalent to the heat dissipated by grounding resistors that have been in service for numerous years on medium-voltage longwall systems. The specified values prevent grounding resistor enclosures from overheating and becoming ignition or fire sources. There were no comments on this provision and therefore it remains as stated in the proposed rule.

Paragraph (a)(4)(i) of the final rule, like the proposed rule, requires high-voltage circuits extending from the section power center to have ground-fault protection set at not more than 40 percent of the current rating of the neutral grounding resistor. These protective devices assure that circuits extending from the section power source will be quickly deenergized when they are subjected to ground faults. The final rule uses the current ratings for grounding resistors, specified in paragraph (a)(3), as a basis for setting ground-fault devices. For example, if a 6.50 ampere grounding resistor is used, the ground-fault device must operate to deenergize the circuit at 2.60 amperes (40 percent) or less. If a 0.50-ampere grounding resistor is used, the ground-fault device must operate to deenergize the circuit at 200 milliamperes or less. The 40 percent trip level provides a safety factor to assure that unexpected lower levels of ground-fault current would be detected and cause the circuit-interrupting device to open. This value also allows proper trip coordination with other protective devices. There were no comments on this section of the rule and the final rule adopts the language used in the proposed rule.

Paragraph (a)(4)(ii) of the final rule, like the proposed rule, requires backup ground-fault protection to detect an open grounding resistor. The ground-fault protective device can be a combination of a potential transformer and voltage relay, or another device(s) capable of detecting an open neutral resistor. Once an open neutral resistor is detected, the ground-fault protective device must cause the circuits extending from the power center to be deenergized. There were no comments on this section of the rule and it remains as stated in the proposed rule.

Paragraph (a)(4)(iii) of the final rule requires thermal protection for the high-voltage neutral grounding resistor, which opens the ground-check circuit for the high-voltage circuit supplying the section power center, if the grounding resistor is subjected to a sustained ground-fault current. The overtemperature rating or setting must be 50 percent of the maximum temperature rise of the grounding resistor or 150°C (302° F), whichever is less. The final rule is changed from the proposed rule to also allow the use of a current transformer, and a thermal overcurrent relay to provide the required thermal protection. The final rule uses the term ''thermal protection'' rather than ''overtemperature protection'' to permit current transformers and thermal relays or other devices such as thermostats that react to overtemperature. This change allows new technology developed by the mining industry during the last seven years.

A commenter questioned the need for these devices. In response, grounding resistors generate heat when subjected to sustained ground-faults. An overtemperature device causes interruption of the high-voltage circuit supplying the section power center by opening the ground-wire monitor circuit before extreme heat destroys the grounding resistor function. Failure of the resistor leaves the circuit unprotected against ground-faults and increases the possibility of fire and shock hazards. The commenter also requested a six-month delay in implementing this provision to allow mine operators to acquire high quality devices. It is MSHA's view that since these devices have been required to be installed on high-voltage longwall mining systems for at least the past seven years under petitions granted for § 75.1002, the devices should be readily available for use. A six month delay is not necessary.

Another commenter wanted the maximum temperature for the overtemperature device to be set at 150° C. This setting was incorporated into the 1992 proposed rule. Some commenters suggested that overtemperature protection should remove power from the power center transformer if the grounding resistor is subjected to a sustained ground fault. These commenters pointed out the following:

(1) Many power centers are equipped with an incoming high-voltage circuit breaker to provide protection for the transformer;

(2) The overtemperature protection for the grounding resistor could cause this circuit breaker to open in the event of a sustained fault; and

(3) This would remove the ground fault and make troubleshooting more convenient.

MSHA agrees that the use of an incoming high-voltage circuit breaker may be an acceptable device for removing power from the section power center when the overtemperature device is activated. However, activation of the grounding resistor overtemperature protection could be an indication of serious problems in the tripping circuits for the circuit-interrupting device(s) located in the power center. This condition warrants complete removal of power from the entire power center until the condition is properly investigated and corrected.

Another commenter stated that experience has shown that the required protection may be best provided by using a current transformer and thermal overcurrent relay rather than a thermostat. The commenter also stated that this type of protection would not be dependent upon control power and would still be able to deenergize the primary of the transformer. MSHA agrees with this comment. The final rule is changed to allow more flexibility in the use of thermal protection. It permits the use of a current transformer and a thermal overcurrent relay to provide required overtemperature protection.

Paragraph (a)(5) of the final rule, like the proposed rule, requires high-voltage motor and shearer circuits to be provided with instantaneous ground-fault protection set at not more than 0.125-ampere. This provides highly sensitive and responsive ground-fault detection systems, using existing technology, for high-voltage circuits supplying electric face equipment. Protective devices are required to operate instantaneously, greatly reducing the likelihood of fires and shock hazards caused by ground faults. Some commenters suggested that the instantaneous ground-fault protection be set at not more than 0.125-ampere if the full-load current of the circuit does not exceed 200 amperes and set at not more than 0.200-ampere if the full-load current of the circuit exceeds 200 amperes. These commenters pointed out that it is very difficult to produce ground-fault current transformers that can reliably discriminate between small ground-fault currents and larger motor starting currents. They further stated that, when the full load current of a circuit exceeds 200 amperes, it is reasonable to expect motor starting currents to exceed 2,000 amperes and that a small increase in the setting of the ground-fault protection is justified for certain high-current circuits. Finally, they stated that a 0.200-ampere setting would still be less than 40 percent of the maximum ground-fault current. Ground-fault devices are used to detect low levels of fault currents during a grounded phase condition. These sensitive devices can be influenced by extremely large values of motor starting current.

MSHA has evaluated these comments and determined that there are sensitive ground-fault protective devices commercially available that have been successfully used to respond to the conditions described by the commenters. These devices can safely and reliably operate at 0.125-amperes or less even on systems having higher motor-starting currents. A large number of existing high-voltage longwall systems use grounding resistors that limit ground-fault currents to 0.500-amperes. Raising the trip value of ground-fault devices protecting motor and shearer cables to 0.200-amperes would also have the device set at 40 percent of the current rating of the grounding resistor. This setting would be the same value as protective devices used on cables extending from power centers to motor-starter enclosures. Proper coordination of these protective devices with upstream devices may not be achievable if the trip setting is raised to 0.200-ampere. For this reason, the provision is unchanged from the proposed rule.

Paragraph (a)(6) of the final rule, like the proposed rule, allows time delay settings, not to exceed 0.25 second (15 cycles), of ground-fault protective devices to provide coordination with the instantaneous ground-fault protection of motor and shearer circuits. This provision limits the time lapses between actuation of the section power center ground-fault protective devices and those located in the motor-starter enclosure. Time delay settings allow coordination and selective tripping of circuit protective devices. This coordination and selective tripping also assures that the entire circuit deenergizes quickly to reduce exposure to shock hazards.

A commenter wanted a time delay of 0.1 second (6 cycles) for ground-fault protection for high-voltage motors. The commenter described situations where nuisance tripping occurred during starting and stopping of the motor and a time delay of 0.1 second would solve the problem. MSHA has evaluated this comment and has determined that technology is available and currently used by industry to alleviate this condition without changing the time delay. Most ground faults occur between the motor-starter enclosure and the motors or shearers. These ground faults must be removed as quickly as possible. Another commenter wanted to add wording to define the total time for ground-fault protection as 0.4 second (24 cycles) maximum for all devices. Most longwall systems now utilize two ground-fault protective devices with a time delay of 0.25 second (15 cycles) which provides adequate time for selective tripping. Thus, the final rule is unchanged from the proposed rule.

Paragraph (a)(7) of the final rule, like the proposed rule, requires an undervoltage protection device that operates on loss of voltage to cause and maintain the interruption of power to a circuit. The rule reduces the likelihood that miners will be pinned or crushed due to the automatic restarting of the equipment. A commenter suggested another means of compliance by using a ''momentary start contactor with a seal in circuit.'' In response, the rule, unchanged from the proposed rule, is performance oriented and permits any undervoltage protection provided by a device that operates on loss of voltage. Therefore, any voltage sensing device, including the method specified by the commenter, that would prevent the automatic reclosing of the circuit protective device as specified in paragraph (a) will meet the requirements of the final rule.

Paragraph (b) of the final rule, like the proposed rule, requires a single window-type current transformer to encircle the three-phase conductors for ground-fault protection. The equipment safety grounding conductors are prohibited from being passed through or connected in series with ground-fault current transformers. This configuration could defeat ground-fault protection and result in hazardous voltage on equipment frames. A single window-type current transformer must be used to provide the ground-fault protection required by paragraph (a)(4)(i) for circuits extending from the section power center to the motor-starter enclosures. It also requires the same type current transformer for ground-fault protection specified in paragraph (a)(5) for:

(1) High-voltage motor circuits extending from the motor-starter enclosures;

(2) The shearer motor circuits extending from the section power center; and

(3) Motor enclosures.

Some commenters suggested this provision should allow for alternative components if they provide equivalent or improved protection. MSHA, however, is unaware of any alternative device that provides equivalent

protection and the commenter did not specify any equivalent devices. The use of a single window-type current transformer to encircle only the three phase conductors assures that sensitive ground-fault devices will be able to detect all ground faults exceeding the setting of the device. Detection devices inserted in the ground wire may not detect all ground-fault currents and could compromise the integrity of the ground circuit. Therefore, paragraph (b) of this section remains as proposed.

Paragraph (c) of the final rule requires a ground-fault test circuit for each ground-fault current device. This test circuit must inject a current of 50 percent or less of the current rating of the grounding resistor to verify that a ground-fault condition causes the corresponding circuit-interrupting device to open. This testing procedure helps determine if ground-fault current devices function at required current levels. It will also test the sensitivity of each device to ground-fault currents. The proposed rule required each ground-fault current device to be provided with a test circuit that would inject a current of 50 percent or less of the current rating of the grounding resistor and cause each corresponding circuit-interrupting device to open. Some commenters suggested that this requirement be limited to ground-fault circuit devices required by paragraphs (a)(4)(i) and (a)(5) of this section. These commenters also suggested that the ground-fault test circuit inject a primary current into the current transformer that does not subject the equipment to an actual phase-to-ground fault. They pointed out that primary current injection tests of the ground-fault devices are safe and effective tests for those devices. They further stated that testing of the backup ground-fault devices located across the grounding resistor, such as the potential transformer and overtemperature relay, would require application of an actual phase-to-ground fault and could be hazardous to both personnel and equipment. MSHA agrees with the commenters that this method of testing is considered to be safe and effective in determining whether a device trips at its setting. In response to these comments, the final rule modifies the proposed rule, to require each ground-fault current device required by paragraphs (a)(4)(i) and (a)(5) to have a test circuit that passes a primary current of 50 percent or less of the maximum ground-fault current through the current transformer and cause the corresponding circuit-interrupting device to open.

Paragraph (d) of § 75.814, like the proposed rule, prohibits the use of circuit-interrupting devices that automatically reclose. Automatic reclosure of the circuit-interrupting device allows immediate reenergization of a circuit that has sustained a fault. Faults occur in underground electrical systems as a result of damage from roof falls or equipment insulation failure. Under such circumstances, the use of automatic reclosing circuit-interrupting devices could create shock and fire hazards when a short-circuit or ground-fault condition exists in the circuit. There were no comments on this paragraph and it remains as proposed.

The final rule includes an additional paragraph (e) that is partially derived from § 75.518–1—*Electric equipment and circuits; overload and short circuit protection; minimum requirements.* This was suggested by joint commenters from industry and labor to address concerns regarding the use of cables in parallel. The commenters suggested that when two or more cables are used to supply power to a common connection point (bus), each cable be provided with ground-wire monitoring so that all cables are deenergized when the grounding conductor becomes severed or open. In support of this suggestion, the commenters noted that when two or more cables are connected in parallel, shock hazards will exist if one cable has been disconnected and the other cable is left energized. MSHA agrees. The Agency has been incorporating this additional requirement into petitions for modification of § 75.1002 during the last four years. The final rule requirement that parallel power cables be installed with ground-wire monitor systems addresses this concern. Ground-wire monitoring in power cables has been an inherent part of the developing high-voltage longwall technology over the last 16 years. In addition, under the final rule, parallel circuits installed after the effective date of this rule must be protected by a single circuit-interrupting device rather than have circuit-interrupting devices operating in parallel unless such devices are mechanically and electrically interlocked. This is supported by the fact that 30 CFR § 75.518–1 requires overcurrent devices to conform to the provisions of the National Electric Code which prohibits parallel connections of circuit-interrupting devices.

Section 75.815 Disconnect Devices

Section 75.815 of the final rule includes requirements pertaining to disconnecting devices located in longwall power centers and in longwall equipment motor controllers that provide a safe means of disconnecting power during the performance of electrical work. It includes design and performance requirements pertaining to electrical ratings, lockout, grounding, and maintenance requirements pertaining to compliance with part 18 of Title 30 CFR. This section was derived, in part, from existing §§ 75.511, 75.520, 75.601, 75.705, and 75.808.

Paragraph (a) as in the proposed rule, requires a disconnecting device in addition to the circuit-interrupting device (required by § 75.814) in the power center that supplies power to longwall equipment. This disconnecting device provides visual evidence that the circuit is deenergized. Either a disconnecting switch or cable coupler would suffice to satisfy this requirement. Disconnecting devices in power centers facilitate the deenergization process prior to performance of electrical work. Figures I–1 and I–2 in Appendix A provide guidance for compliance with this requirement. The Agency did not receive any comments on this provision and it is unchanged from the proposed rule.

Paragraph (b) of the final rule, like the proposed rule, establishes maintenance requirements for disconnecting devices in motor-starter enclosures. Section 75.815(b) requires that disconnect devices be maintained in accordance with the approval requirements of paragraph (f) of § 18.53—*High-voltage longwall mining systems.* Section 18.53(f) requires that the load-side power conductors be grounded when the disconnecting device is open. This provision guards against the occurrence of electrical accidents by requiring the circuit disconnect device to ground the disconnected circuit before work is performed on the circuit. The final rule assures that a properly maintained safe means of deenergizing longwall circuits and equipment is readily available for use during routine operation or in the event of an emergency. Additionally, the final rule provides for safe deenergization of high-voltage circuits in the motor-starter enclosure, or equipment supplied power through the enclosure during testing and troubleshooting work. MSHA encourages mine operators to continue using additional disconnecting devices that are already installed in many existing longwall systems.

Paragraph (b) requires a caution label on the cover of each starter enclosure compartment containing the main disconnecting device. This caution label must warn miners against entering the compartment before deenergizing the incoming high-voltage circuits to the

compartment. It warns miners that the line side of the disconnect device may be energized when the device is opened and cautions them to deenergize incoming power before removing any covers. It also helps to assure that miners deenergize power to starter enclosures before removing any of the covers. There were no comments received on this provision so the final rule is unchanged from the proposed rule. MSHA recognizes that the mining industry has taken safeguards by using additional caution labels to warn miners of stored energy devices (capacitors). We encourage the industry to continue the safety practice of using caution statements that warn miners to ground the capacitors before performing work on electric circuits.

Paragraph (c) of the final rule, like the proposed rule, requires disconnecting devices to have voltage and current ratings compatible with the circuits in which they are used. This requirement ensures safe operation of these devices during normal use. The Agency received no comments on this provision. It remains the same as the proposed rule.

Paragraph (d)(1) of the final rule, like the proposed rule, requires that disconnecting devices be designed to provide visual evidence that all ungrounded power conductors are disconnected when the device is open. Visual evidence means the ability to observe the physical separation of the control and power conductors without removing any covers. There were no comments received on this provision and no changes were made to the proposed rule.

Paragraph (d)(2) of the final rule, like the proposed rule, requires that disconnecting devices be equipped to ground all power conductors when the device is ''open''. This requirement allows the circuit to be properly grounded before any work is performed on the electric circuits or equipment. It also allows discharging of any existing voltage due to capacitance between the power conductors and ground. The Agency did not receive any comments on this provision. It remains unchanged from the proposed rule.

Paragraph (d)(3) is unchanged from the proposed rule. It requires each device be equipped to lock the device in the open position. This ensures that the circuit being worked on remains deenergized until work is completed. There were no comments received in response to this provision.

Paragraph (e) of the final rule, like the proposed rule, requires that disconnecting devices, except those installed in explosion-proof enclosures, be capable of interrupting load currents without creating hazardous conditions. If the device is not designed for full load interruption, the device must be installed so that a circuit-interrupting device will deenergize the incoming power circuit before the disconnecting device opens. Use of improperly rated devices could result in the destruction of the device and injuries to miners due to flash burns or flying parts. The final rule further requires that disconnecting devices installed in explosion-proof enclosures be maintained in accordance with the approval requirements of § 18.53(f)(2)(iv) of part 18. This provision specifies that disconnecting devices be designed and installed to cause the current to be interrupted automatically prior to the opening of the contacts of the device. The Agency did not receive any comments on this provision so it remains the same as the proposed rule.

Some commenters suggested that a new paragraph (f) be added to require that any additional disconnecting devices used to deenergize a portion of the longwall equipment meet the requirements of paragraphs (c), (d), and (e). They stated that it is often necessary to maintain power on part of the longwall equipment in order to safely and efficiently perform electrical work on another part of the equipment. For example, they stated that a disconnecting device for the shearing machine circuit will permit electrical work on a deenergized shearing machine while maintaining power on the rest of the longwall. Under the final rule, individual disconnecting devices, such as cable couplers, may be used to isolate individual pieces of equipment for the purpose of performing maintenance. The final rule requires that all additional disconnecting devices satisfy the requirements of paragraphs c, d, and e. Therefore, the Agency believes that an additional provision is not necessary.

Section 75.816 Guarding of Cables

This rule is derived in part from existing § 75.807—*Installation of high-voltage transmission cables* and addresses guarding of high-voltage cables supplying longwall equipment. Until this rule, § 75.807 related to high-voltage cables in areas not in by the last open crosscut or not within 150 feet from the pillar workings. In addition to the § 75.807 requirements, § 75.816 of this final rule requires guarding of high-voltage cables where persons regularly work or travel over or under the cables and where the cables leave cable handling or support systems in the longwall face areas or are within 150 feet of the pillar workings. As provided in § 75.807, cables installed six and one half feet or more above the mine floor satisfy these requirements by location. Guarding minimizes the possibility of miners inadvertently contacting the cables. Also, cable guarding must consist of grounded metal or nonconductive flame-resistant material. High-voltage cables used to supply longwall equipment could present shock and fire hazards if the cables are damaged or defective.

Paragraph (a)(1) of the final rule, like the proposed rule, requires that cables be guarded where persons regularly work or travel over or under the cables. This minimizes accidental contact with cables. There were no comments received on this provision and it is unchanged from the proposed rule.

Paragraph (a)(2) of the final rule, like the proposed rule, requires guarding where the cables leave cable handling or support systems to extend to electric components. This provision prevents physical damage from stress and flexing that might cause shock and fire hazards. The Agency did not receive any comments on this provision and it remains the same as in the proposed rule.

Paragraph (b) of the final rule requires guarding of high-voltage cables to minimize the possibility of inadvertent contact with cables and to protect high-voltage cables from physical damage. Guarding must be constructed of grounded metal or nonconductive flame-resistant material. This standard provides minimum requirements for the physical and electrical protective characteristics of the guarding. The proposed rule required that guarding prevent miners from contacting high-voltage cables.

One commenter suggested that the provision specifically permit the use of either continuous guarding or overlapping sections of guarding. According to this commenter, overlapping sections of guarding achieve the safety goal of the provision and would reduce time-consuming and expensive repairs that could involve thousands of feet of cable to repair a small section. In response to this comment, the rule specifies the locations where cables are required to be guarded. Under the rule, the guarding material must cover the cables and continuous or overlapping guarding may be used. When joining sections of metal guarding, steps should be taken to assure proper grounding.

Other commenters suggested that this section require that guarding ''minimize'' rather than ''prevent'' the possibility of miners contacting the cables. They stated that it is not

practical to design guarding that would prevent miners from contacting the cables. This often occurs when miners are attempting to guide or train cable into its holding trough when it is loose or falls out. They suggested it is possible to design guarding that would ''minimize'' contact or ''block access'' to the cable. MSHA agrees with this commenter and modified the proposed rule. In response to these comments, this revised provision, requires a physical barrier consisting of guarding material between the cables and miners to minimize inadvertent contact with the cables, and requires mechanical protection for the cables. Also, § 75.818 of the final rule prohibits intentional contact with cables except for the purpose of training (guiding) motor and shearer cables with the use of proper protective equipment.

Section 75.817 Cable Support Systems

This section of the rule addresses handling and support systems of high-voltage cables suppling longwall equipment. Under the final rule, longwall mining systems must be equipped with cable handling and support systems that are constructed, installed, and maintained to protect high-voltage cables from damage and to minimize the possibility of miners inadvertently contacting the cables. Under the proposed rule, these systems were required to prevent miners from contacting high-voltage cables. High-voltage cables used to supply longwall equipment can present shock and fire hazards if the cables become damaged or defective. This section of the final rule provides the necessary protection to cables and miners by minimizing exposure to damaged or defective cables. This section is derived, in part, from existing requirements in § 75.807 and addresses new systems developed by the mining industry to mechanically handle and support cables. These systems are presently used on high-voltage longwall mining systems to minimize damage to the cables.

One commenter suggested that a provision be added to this section that allows the installation of guarded high-voltage cables in cable handling and support systems where hydraulic hoses and low- and medium-voltage cables are also installed. In response to this comment, high-voltage longwall equipment and associated cables are currently required by existing § 18.36(b)—*Cables between machine components* to be isolated from hydraulic lines. Also, existing § 75.807 currently requires that the high-voltage cables be placed in a manner to prevent contact with other low-voltage circuits. Isolation and placement help guard against fire and assures protection of electric cables, which could be damaged, if hydraulic lines are ruptured or conductor insulation fails. Based on MSHA experience, acceptable methods which meet § 18.36(b) requirements will be determined during the part 18 approval process. Guarding of cables by proper isolation and placement is an acceptable method to meet this requirement.

Other commenters suggested that the wording of the rule be changed to ''longwall mining equipment shall be provided with cable handling and support systems that are constructed, installed, and maintained to minimize the possibility of miners contacting the cables and to protect the high-voltage cables from damage.'' We agree with the commenters as stated in the previous discussion of § 75.816. The final rule requires that cable support systems minimize the possibility of inadvertent contact instead of preventing contact.

Section 75.818 Use of Insulated Cable Handling Equipment

This section of the final rule addresses the types of personal protective equipment that may be used when it is necessary to handle high-voltage longwall cables, the examination for defects or damage prior to use, and the intervals at which high-voltage protective equipment must be tested. Its purpose is to provide protection against electric shock hazards associated with the handling of energized high-voltage longwall cables. This section is derived, in part, from existing requirements in §§ 75.705–6—*Protective clothing; use and inspection,* 75.705–8—*Protective equipment; testing and storage* and 75.812—*Movement of high-voltage power centers and portable transformers; permit.*

Paragraph (a) of the final rule, like the proposed rule, requires that personal protective equipment be used when training or guiding, by hand, a high-voltage longwall cable into the cable handling trough when the cable inadvertently comes out. Commenters suggested that the list of protective equipment be expanded to include facial protection and protective clothing, and that the protective equipment also be capable of providing protection from a cable explosion. They stated that additional protection is needed for persons who handle high-voltage longwall cables, since persons have been burned when power conductor insulation deteriorates within the cable and the power conductors fault or contact each other, causing the cable to explode. MSHA disagrees. Shielded-type cables, required by existing regulations, provide the necessary protection for miners by limiting or preventing electrical arcing and flashover within the cable. This protection occurs as long as the cables are used in conjunction with proper mechanical protections required under § 75.817, and with proper maintenance of electrical protective devices required under § 75.814. Therefore, paragraph (a) of this final section remains as proposed.

Paragraph (b) of the final rule requires high-voltage insulated gloves, sleeves, and other insulated personal protective equipment, to have a Class 1 (7,500 maximum use volts) or higher rating that has been established by a nationally recognized consensus standard. The protective equipment must be: (1) Examined prior to each use for signs of damage or defects; (2) destroyed or removed from the underground area of the mine if found damaged or defective; and (3) electrically tested every six months according to a nationally recognized consensus standard. This provision protects against electrical shock hazards by requiring personal protective equipment to be rated for a maximum use voltage and examined before each use to determine if the equipment is safe to use. Paragraph (b) of the proposed rule required all personal protective equipment to be rated for 20,000 volts; examined before each use for visible signs of damage; removed from the underground area of the mine when damaged or defective; and electrically tested every six months.

A commenter suggested that this paragraph be modified to allow gloves to be rated for a minimum of 5,000 volts and tested every six months as described in a nationally recognized consensus standard. The Agency is not aware of any recognized consensus standards that rate gloves, sleeves, and other personal protective equipment at 5,000 volts. The commenter also stated that damaged or defective gloves should be permitted to be either removed from the underground area of the mine or destroyed.

Another commenter stated that insulated personal protective equipment should be electrically tested by the manufacturer in accordance with ASTM standards and be rated for at least the maximum nominal voltage of the circuit. The commenter also stated that personal protective equipment should be examined before each use for visible signs of damage or defects and be electrically tested at least every six months or when there is any sign of excessive wear. This commenter stated that the visible and electrical tests

should be conducted in accordance with American Society for Testing and Materials (ASTM) standards.

In response to the commenters' concerns, we agree that safety would be enhanced by adopting the ASTM standard. We have revised paragraph (b) of the proposed rule. The final rule requires insulated protective equipment, including high-voltage gloves and sleeves, to be rated a Class 1 or higher (maximum use voltage of 7,500 volts). Paragraph (b)(1) requires that this equipment be examined before each use for visible signs of damage or defects. This section requires users of protective equipment to examine it for hazardous conditions, including excessive wear. For example, a method commonly used to detect damage in insulating gloves is to test the rubber gloves by rolling the cuff tightly toward the palm of the glove in such a manner that air is entrapped inside the glove. Puncture detection may be enhanced by listening for escaping air or by feeling escaping air against the face.

In response to commenters, the Agency has revised paragraph (b) in the final rule to allow defective personal protective equipment to be destroyed or removed from the mine. The Agency agrees with the commenter that destroying this equipment when it becomes defective is as effective as removing it from the underground mine.

MSHA also received comments suggesting that insulating protective equipment be tested every six months in accordance with nationally recognized standards. The Agency agrees with this commenter and has revised paragraph (b) to require that all insulated handling equipment for use with high-voltage longwall cables be electrically tested every six months in accordance with a nationally recognized consensus standard contained in the ASTM F496–97, ''Standard Specification for In-Service Care of Insulating Gloves and Sleeves.'' The purpose of these formal testing procedures for high-voltage cable handling equipment is to provide necessary safety protections for miners and ensure that unknown equipment defects will be detected before they are a hazard to miners.

Section 75.819 Motor-Starter Enclosures; Barriers and Interlocks

Section 75.819 of the final rule, like the proposed rule, requires separation by location, partitions, or barriers of low- and medium-voltage circuits from high-voltage circuits in motor-starter enclosures and requires cover interlock switches to be installed on the cover of any motor-starter compartment containing high-voltage components. The compartment separations and interlock switches must be maintained in accordance with paragraphs (a) and (b) of § 18.53—*High-voltage longwall mining systems.* The purpose of § 75.819 is to help guard against miners coming in contact with energized internal components of high-voltage electric equipment through proper maintenance of safety devices that assure deenergization when any cover that provides access to energized high-voltage components is removed. Compartment separation also helps assure that persons are not exposed to adjacent energized high-voltage components or circuits after gaining access to compartments containing control, communication, or other low- and medium-voltage circuits.

This provision provides automatic protection for miners who may inadvertently remove a cover exposing energized high-voltage circuits should the wrong circuit be disconnected. There were no comments received on this section of the proposed rule and it remains as proposed.

Section 75.820 Electrical Work; Troubleshooting and Testing

Section 75.820 is directed at protecting miners while they are performing electrical work, including troubleshooting and testing, and the removal of belt structure. This section is derived, in part, from existing §§ 75.509—*Electric power circuit and electric equipment; deenergization,* 75.511—*Low-, medium-, or high-voltage distribution circuits and equipment; repair,* and 75.705—*Work on high-voltage lines; deenergizing and grounding* and addresses requirements for performing work on all circuits and equipment associated with high-voltage longwalls. This section applies to all low-, medium-, and high-voltage circuits and equipment associated with high-voltage longwalls. The requirements are similar to those in existing §§ 75.509 and 75.511 for work on electric circuits and equipment generally, except with additional requirements applicable to high-voltage longwall installations. These requirements include personnel qualifications and safe work procedures, including safety equipment when troubleshooting and testing, and methods to guard against contact with energized high-voltage cables during the installation and/or removal of belt structure(s). The final rule for § 75.820 is identical to the proposed rule except for changes to § 75.820(a), which is revised based on a recent Federal Mine Safety and Health Review Commission decision and §§ 75.820(d)(3) and 75.820(f) which MSHA revised due to comments. The revisions address: (1) The fact that persons qualified under § 75.153—*Electrical work; qualified person* must be able to perform electrical work on *all* circuits and equipment; (2) The type of gloves that must be worn by persons performing troubleshooting and testing; and (3) The methods used to guard against contact with a high-voltage cable during installation and/or removal of belt structure.

Paragraph (a) of the final rule requires that electrical work on all circuits and equipment associated with high-voltage longwalls be performed only by persons qualified, in accordance with § 75.153, to perform electrical work on all circuits and equipment, not just high-voltage circuits and equipment. This change is consistent with the recent Federal Mine Safety and Health Review Commission decision, *Secretary of Labor* v. *Black Mesa Pipeline, Inc.* 22 FMSHRC 708, 715 (June 30, 2000). That decision concluded that § 75.153 requires that a ''person qualified'' be knowledgeable of high-, medium-, and low-voltage circuits and equipment. Therefore, for clarification purposes, the language of this final rule has been modified to conform with this decision and the plain meaning of § 75.153. This requires that a person qualified to work on electrical circuits be knowledgeable of low-, medium- and high-voltage circuits. The Agency currently requires that qualification in all voltages be obtained before a person can become qualified under § 75.153. The requirement that persons performing electrical work be qualified for all voltages assures that persons performing work on low- and medium-voltage circuits are qualified to identify hazards that may exist on high-voltage circuits in close proximity of their work.

Some commenters suggested that paragraph (a) state that electrical work on all high-voltage circuits and any enclosure containing high-voltage components shall be performed only by persons qualified under § 75.153 to perform electrical work only on high-voltage circuits and equipment. These commenters indicated that the proposed rule would not permit persons qualified under § 75.153 to perform electrical work only on low- and/or medium-voltage circuits or equipment or perform any electrical work on circuits or equipment associated with a high-voltage longwall. The commenters further indicated that certain subsystems of the longwall are completely isolated from high-voltage circuits and equipment such as: lighting systems, communication systems, shield

control systems, hydraulic pump control systems, battery chargers, air compressors, and rock dusters. However, because many low- and medium-voltage circuits associated with high-voltage longwalls are in close proximity to the high-voltage circuits, MSHA believes it is important that anyone performing electrical work on the high-voltage longwall be knowledgeable about low-, medium- and high-voltage circuits. And, as noted above, a person qualified under § 75.153 must be knowledgeable of all voltage circuits.

Since all the circuits cannot be totally isolated, it is important that qualified persons working on the circuits of lower voltages be aware of the hazards of high-voltage circuits. Another commenter inquired as to what the high-voltage qualification requirements were and suggested that MSHA ensure that appropriate training is defined and required. MSHA's existing standard in § 75.511—*Low-, medium-, or high-voltage distribution circuits and equipment; repair* requires that only persons qualified in low-, medium- and high-voltages perform high-voltage work, and § 75.153 sets forth the procedures for their qualification. Additionally, existing § 75.160—*Training programs* requires an MSHA approved plan for retraining qualified persons. Another commenter requested that wording be added to allow anyone to perform high-voltage work under the supervision of a qualified person. Due to the hazards previously described, only qualified electricians perform high-voltage work. Therefore, except for the clarifications noted above, paragraph (a) of this section remains as proposed.

Generally, paragraphs (b)(1) through (b)(4) of § 75.820, like the proposed rule, require safety precautions to be taken by qualified electricians prior to performing electrical work. The qualified electrician is responsible for assuring that the electrical circuit is properly deenergized, that the contacts of the circuit disconnecting device are open, and that the disconnecting device is locked out with a padlock and tagged. These precautions assure that the affected circuit has been properly deenergized and disconnected so that persons performing work are not exposed to shock, electrocution, or burn hazards. Without taking precautions, such as properly locking out and tagging the affected circuit, qualified electricians would be exposed to shock and electrocution risks if someone were to inadvertently reenergize the circuit.

Paragraph (b)(1) of the final rule specifically requires that a qualified person deenergize the circuit or equipment with a circuit-interrupting device. There were no comments on paragraph (b)(1) of the proposed rule. This paragraph of the section remains as proposed.

Paragraph (b)(2) of the final rule requires that a qualified person open the disconnecting device when performing work on circuits and equipment, and if high-voltage, ground the circuits. Opening the disconnect device deenergizes the circuit which, along with grounding, protects the person working on the circuit from shock and electrocution hazards. A commenter stated that in addition to grounding the circuit prior to work being performed, that grounding hot sticks (a collapsible non-conductive pole used to de-energize electrical circuits) rated at 4,160 volts should be available at each power center and a proximity tester should be used by the qualified electrician to determine that the circuit is deenergized. In response to this comment, § 75.815(b) of the final rule requires that the disconnecting devices be maintained in accordance with the approval requirements of paragraph (f) of § 18.53. Section 18.53(f) in turn requires that the disconnecting devices ground the circuit when ''open.'' In addition, the requirement in paragraph (b)(3) of § 75.820 places responsibility on each qualified person to lock out the disconnecting device for the high-voltage circuit prior to performing work. Therefore, MSHA concludes that equipping power centers with grounding hot sticks, clamps, and proximity testers, as suggested by the commenter, is not necessary. Therefore, paragraph (b)(2) of this section remains as proposed.

Paragraph (b)(3) of the final rule, like the proposed rule, requires that disconnecting devices be locked with an individual padlock by each person performing work. Individual padlocks, removable only by the persons who installed them, place responsibility on the persons performing work to assure their personal safety. This should prevent accidental reenergization of equipment or circuits before all persons have completed work. The danger and accident history of reenergization of circuits before work is completed require such measures for the protection of miners against electrocution or electric shock. A commenter suggested that the section be reworded to permit the oncoming worker to install his/her lock, and the departing worker to remove his/her lock at the change of shifts. Another commenter suggested that MSHA recognize that service or maintenance in many cases is performed by a new crew or group of people and that a group lockout procedure be allowed. This commenter suggested that primary responsibility can be vested with an authorized employee when more than one group is working on the equipment, so that an authorized person from each group may lockout the equipment. A review conducted by the Agency in 1999 revealed that during the period 1970 to 1999, a total of 145 fatal accidents occurred by miners contacting energized circuits. Data further revealed that during a five year period between 1994 and 1999, a total of nine fatal accidents were related to failure to lockout disconnecting devices. The review also revealed that deaths and injuries had also occurred when equipment was energized before all persons had completed their work. Furthermore, the National Safety Council in *Data Sheet 237 Revision B, Methods of Locking Out Electrical Switches (1971)*, recommends that individual, not group, type lockout procedures be used. This publication is available in the rulemaking record. Consistent with Agency experience and safety recommendations, the final rule requires individual lockout rather than group lockout. MSHA is confident that this system provides the necessary safety protection because persons assigned to place and remove their own locks are more cognizant of and responsible for their own security, and more likely to take the steps necessary to assure proper deenergization. This also reduces the risk of error due to lack of communication or inadvertent reenergization. For these reasons, the paragraph remains unchanged from the proposed rule.

Paragraph (b)(4) of the final rule, like the proposed rule, requires tags used on deenergized circuits and equipment to identify each person performing work and the circuit or equipment on which work is being performed. There were no comments on this paragraph of the proposed rule and it remains as proposed.

Paragraph (c) requires, like the proposed rule, that only the persons who install a padlock and tag be permitted to remove them. This provision also provides for an exception where an operator could authorize someone else to remove the lock and tag if the person who installed them is unavailable at the mine. Such authorized person is required to be qualified to perform electrical work. Additionally, the person who had originally installed the lock and tag must be informed of the lock removal before resuming work on the circuit or equipment. A commenter stated that in the absence of the person who installed

the lock, the mine operator may designate a qualified electrician to remove the lock after it has been determined that all other affected persons are not exposed to a hazard. Paragraph (c) of the final rule requires locks to be removed by the person who installed them or by qualified persons authorized by the operator, if that person is unavailable at the mine.

Paragraph (d) of the final rule requires that certain safety procedures be followed when troubleshooting and testing energized circuits. This includes limiting troubleshooting and testing of energized circuits only to low- and medium-voltage systems. In addition, only qualified electricians wearing properly insulated rubber gloves are permitted to perform this work and only for the purpose of determining voltages and currents. This provision recognizes that, in some instances, it is necessary for circuits or equipment to remain energized for troubleshooting and testing. For example, in order to understand the nature of problems within a circuit, it may be necessary to take voltage or current readings while the circuit is energized.

Paragraph (d)(1) of the final rule, like the proposed rule, limits troubleshooting and testing of energized circuits only to low- and medium-voltage systems. Since troubleshooting and testing energized circuits is known to be inherently hazardous work, the particular skills and training of a qualified electrician are necessary for performance of these tasks. Troubleshooting and testing is limited to low- and medium-voltage energized circuits, primarily due to insulation ratings of available troubleshooting and testing equipment. Insulation ratings on equipment commonly used to troubleshoot and test in underground mines are insufficient to protect persons if such equipment is used to troubleshoot and test high-voltage circuits.

A commenter suggested that troubleshooting of energized circuits ranging from 120 to 1,000 volts (low to medium voltage) should be prohibited. This commenter indicated that the industry has already demonstrated that high-voltage longwalls can be installed, commissioned, and maintained without maintenance personnel being exposed to any voltage higher than 120 volts. The commenter further stated that if multiple utilization voltages are required in the same compartment, then each supply should have a disconnect device, and cover switches should be arranged to trip circuit-interrupting devices to cut off both voltages. Some high-voltage longwalls are designed with equipment supplied from low- and medium-voltage as well as high voltage. These hybrid-type longwall systems include both high-voltage and low- and medium-voltage equipment. This provision allows troubleshooting and testing of low- and medium-voltage circuits associated with these hybrid longwalls. Based on Agency experience with petitions for modification allowing such testing, troubleshooting, and testing of low- and medium-voltage circuits can be safely performed with proper test instruments, and with use of protective gloves that are commercially available. Therefore, paragraph (d)(1) of this section remains as proposed.

Paragraph (d)(2) of the final rule permits troubleshooting and testing of energized circuits only for the purpose of determining voltages and currents (amperes). Some commenters suggested that paragraph (d)(2) be changed to allow troubleshooting and testing to determine waveform or other electrical diagnostic testing as well as voltages and currents. The final rule, as written, is responsive to the commenter's suggestion because evaluation of waveform or diagnostic testing is normally considered to be a method of measuring voltage and current. Paragraph (d)(2) of this section remains as proposed.

Paragraph (d)(3) of the final rule requires that troubleshooting and testing of energized circuits be performed by persons qualified under § 75.153 who wear protective gloves when the voltage of the circuit exceeds 40 volts. This should prevent accidents related to contact with energized circuits while troubleshooting and testing. These gloves will provide the insulation protection necessary if a miner has inadvertent contact with energized circuits during troubleshooting and testing. A commenter stated that the circuit is designed to permit troubleshooting of 120-volt alternating current (VAC) control power. During this period, high voltage is not present while the normal/test auxiliary switch is in the ''test'' position and the incoming high-voltage disconnect is in the ''open/grounded'' position. This commenter suggested that gloves be rated for 120 VAC rather than the nominal voltage of the circuit. The Agency is not aware of any gloves rated for less than 1,000 volts. The rating of gloves is determined commercially through formal testing procedures established by national standards.

Another commenter suggested that this paragraph be changed to permit the use of dry work gloves when troubleshooting low- and medium-voltage circuits and to permit troubleshooting of high-voltage circuits. The commenter added that wearing rubber gloves should be required when working with high-voltage circuits; however, requiring that rubber gloves be worn when troubleshooting low- and medium-voltage circuits would diminish safety. In response to these comments, MSHA believes that rubber gloves do not permit sufficient dexterity, as do dry cloth gloves, for the safe troubleshooting of low- and medium-voltage circuits. For example, an ohm meter has small controls which are difficult to operate while wearing rubber gloves and the small metal probes used with the ohm meter are hard to pick up while wearing rubber gloves. A serious accident could result if probes were improperly placed in an energized circuit or dropped in close proximity to voltages up to 995 volts. In contrast, dry work gloves allow for manual dexterity while providing adequate protection. The commenter specified that his company has safely used dry work gloves when troubleshooting low- and medium-voltage circuits for 15 years. The commenter further stated that proposed § 75.820(d) would conflict with existing § 75.509—*Electric power circuit and electric equipment; deenergization* in two respects. The first is that § 75.509 permits troubleshooting of high-voltage circuits, as well as low- and medium-voltage circuits. In contrast, proposed § 75.820(d)(1) would permit troubleshooting only on low- and medium-voltage circuits. The second is that proposed § 75.820 conflicts with MSHA's interpretation of § 75.509 concerning situations where insulated rubber gloves are required. MSHA's Program Policy Manual states:

> Work gloves in good condition are acceptable for troubleshooting or testing energized low-or medium-voltage circuits or equipment. *High-voltage gloves, rated at least for the voltage of the circuit, are required for troubleshooting or testing of energized high-voltage circuits or in compartments containing exposed energized high-voltage circuits. (This portion has been corrected by MSHA Program Policy Update V–15.)*

The commenter further stated that in order to be consistent with § 75.509, as well as prudent mining practices, proposed § 75.820(d) should be changed to permit both troubleshooting of high-voltage circuits and use of dry work gloves for troubleshooting low- and medium-voltage circuits.

In response the Agency states that existing § 75.705—*Work on high-voltage lines; deenergizing and grounding* specifically applies to high-voltage circuits out from (outby) the longwall mining faces or pillar workings. Section

75.705 specifically prohibits work on high-voltage lines underground in relation to troubleshooting and testing of high-voltage circuits. Section 75.509 generally applies to all electrical circuits and is less restrictive. This final rule specifically applies to high-voltage circuits on longwalls and is consistent with the safety requirements of existing § 75.705.

Based on Agency data and experience, it is our view that attempts to troubleshoot and test energized high-voltage circuits using standard test equipment, such as volt-ohm-meters, commonly used on low- and medium-voltage circuits, is extremely hazardous. MSHA prohibits troubleshooting and testing of energized high-voltage circuits and equipment. The use of hand-held proximity testers to determine shielding continuity and energized circuits is allowed under this regulation. Troubleshooting and testing routinely involves the use of portable test instruments equipped with attached leads and metal probes used to move from point to point in a circuit for the purpose of determining voltage and/or current readings needed to target problem areas. Insulation ratings on equipment commonly used to troubleshoot and test are insufficient to protect persons if this equipment is used on high-voltage circuits. The commenter stated that the MSHA program policy manual permitted troubleshooting and testing of energized high-voltage circuits. After review, MSHA determined that this policy was inadvertently drafted in error and specifically conflicts with mandatory safety standard § 75.705. The error was corrected in MSHA Program Policy Update V–15. The printed-in-error version was never officially considered or enforced as MSHA policy.

Other commenters suggested—(1) that gloves not be required under the standard when the maximum circuit voltage does not exceed 40 volts; (2) that dry work gloves in good condition be required when the maximum circuit voltage does not exceed 150 volts or the circuit voltage exceeds 150 volts but is intrinsically safe; and (3) that insulating gloves, with protective coverings designed to prevent physical damage to the insulating material, be required when the maximum circuit voltage exceeds 150 volts and the circuit is not intrinsically safe.

MSHA agrees with some of the commenters' suggestions and has written the final rule to reflect these changes. The final rule requires the use of protective gloves when troubleshooting and testing circuits having voltages that exceed 40 volts. Based on MSHA electrical accident information and experience, 40 volts is the lowest voltage level range at which shock hazards are minimized. Other mandatory safety standards, such as §§ 77.515—*Bare signal or control wires; voltage,* 75.901—*Protection of low- and medium-voltage three-phase circuits used underground*, 75.902—*Low- and medium-voltage ground check monitor circuits,* and 77.902–1—*Fail safe ground check circuits; maximum voltage,* use 40 volts as a minimum safety voltage range level. Section 18.50—Protection against external arcs and sparks also uses 40 volts as a minimum voltage range level for shock hazard protection guidelines for electrical equipment frames. Dry work gloves, in good condition (free of holes, etc.) will be permitted on circuits where the voltage does not exceed 120 volts nominal and on circuits where the voltage exceeds 120 volts nominal but is intrinsically safe. The normal control circuit nominal voltage value is 120 volts for mining equipment. Section 75.1720—*Protective clothing, requirements* and MSHA policy allow miners to use dry gloves when working on circuits up to 1000 volts. Rubber insulating gloves rated for at least the nominal voltage of the circuit and equipped with leather protectors will be required to be used on circuits where the voltage exceeds 120 volts nominal but is not intrinsically safe. (See paragraphs (b)(3) and (b)(4)). Mine equipment typically has ratings such as 220-, 480-, 995-volts and higher. Rubber gloves are not commercially rated for each of these voltages. Rubber insulating gloves rated at 1,000 volts are commercially available at this time. The 1,000 volt rated gloves can be used on each of these circuits and, in fact, offer increased protection for troubleshooting and testing on circuits exceeding 120 volts.

MSHA's fatality data show that at least six fatalities have occurred since 1970 due to miners' contact with energized circuits while troubleshooting and testing. The provisions of § 75.820 address electrocution and shock hazards associated with troubleshooting and testing of the low- and medium-voltage portions of high-voltage longwalls and provide additional protection for persons performing work on these circuits.

Commenters suggested that the proposed rule be expanded to include facial protection, and protective clothing to minimize the risk of injury in case of a short circuit during troubleshooting and testing of an energized circuit. In support of this suggestion, commenters stated that these additional requirements were needed to protect persons from an electrical explosion, an electrical flash, and from flying debris. Commenters suggested that injuries could be minimized if protective clothing, such as a leather vest instead of polyester, was worn, as clothing made of material that melts could compound an injury.

In response, the Agency concludes that when mine operators and miners comply with the provisions of this final high-voltage rule, including proper testing, examination, and maintenance of circuits and equipment, and safe procedures during troubleshooting and testing, hazards such as flying debris, electrical arcing, and flashover can be avoided. Electrical arcing during troubleshooting and testing is normally due to either misapplication or misuse of test equipment. In some cases, electrical hazards may occur as a result of circuit insulation failure while troubleshooting. Under the final rule, only qualified individuals must be assigned to perform troubleshooting and testing. Further, they must perform thorough examinations, tests, and maintenance of circuits and equipment to help guard against the occurrence of injury due to electrical arcing caused by failure of insulation.

Paragraph (d)(4) of the final rule requires that rubber insulated gloves, when required, be rated at least for the nominal voltage of the circuit. This requirement was contained in paragraph (d)(3) of the proposed rule. Comments pertaining to this proposed rule are addressed above. The language of this provision remains the same as the proposed, but it is renumbered.

Paragraph (e) of the final rule, like the proposed rule, requires deenergization of high-voltage circuits contained in a compartment with low-or medium-voltage circuits, in order to troubleshoot or test the low-or medium-voltage circuits. Deenergizing, grounding, and locking out and tagging the high-voltage circuit provides protection against the danger of accidental contact with the high-voltage circuits while troubleshooting and testing low- and medium-voltage circuits. Some commenters suggested that high-voltage circuits should never be located in the same compartment with low- and medium-voltage circuits in order to prevent persons from contacting high-voltage circuits while testing or working on low- and medium-voltage circuits. In response to this comment, electrical closing of high-voltage contactors contained in motor-starter enclosures requires low-voltage magnetic components that are a part of the contactors. Therefore, sometimes it is necessary, to have both high voltage in

the form of a power circuit and low voltage in the form of a control circuit in the same compartment(s) of the motor-starter enclosures. In addition, compartments of motor-starter enclosures that house high-voltage disconnect switches may also contain low-and/or medium-voltage control and lighting transformers. The deenergization and lockout requirements under the new standard address the safety concerns associated with working near multiple voltage circuits. Therefore, the Agency concludes that paragraph (e) of this section should remain as proposed.

Paragraph (f) of the final rule requires that high-voltage cables located in conveyor belt entries be deenergized, guarded, or isolated by elevation prior to the installation or removal of the conveyor belt structure. The proposed rule required that the cables be deenergized prior to the removal of the structure. Other commenters suggested that the deenergization requirement should apply to the installation, as well as the removal, of conveyor belt structures. These commenters pointed out that the same type of work is performed during belt installation as during removal. The Agency agrees with these commenters and has concluded that the final rule should apply to advancing as well as retreating longwall systems. Therefore, the requirement has been changed to apply to installation as well as removal of conveyor belt structures. Contact with or damage to energized cables while installing or removing conveyor belt structures could cause risks of fire and electrocution to miners. The final rule addresses these dangers by requiring either deenergization, guarding, or proper location of the cables before installing or removing belt structures.

Commenters suggested that deenergizing the high-voltage cable for removal of the belt conveyor structure is often impractical and that an alternative would be to guard the cable from direct contact with the belt conveyor structure during removal. Reasons given for this alternative were: (1) Many of the routine jobs performed along the longwall face cannot be performed with the power off (such as repositioning of the longwall shearer, moving the shields electronically and moving the face conveyor, as well as equipment servicing and welding operations that typically contribute to the normal safe and efficient operation of the longwall) and (2) Methane monitors, face lighting, and on-board shield diagnostics would lose power if they receive electrical power through the high-voltage system that feeds the face equipment. In addition, the commenter pointed out that belt structure removal occurs 2 or 3 times a shift, taking 15 to 30 minutes each time. Other commenters suggested that this provision be deleted, since proper guarding is required by § 75.816. These commenters suggested that the requirement would result in deenergizing cables even if work is being done 10,000 feet from the cables. Another commenter suggested that this requirement should be waived if the high-voltage cable is installed on monorail because personnel are safely protected by the location of the cable.

Other reasons given for deleting the deenergization requirement were: (1) It would be less safe for miners, as it would result in deenergization of several longwall safety devices such as the face and equipment illumination system; (2) It would result in an undue burden for operators due to the time required to travel to and from the power center in order to deenergize the cable; (3) It would cause undue stress, wear and tear on electrical breakers, components, and cables due to frequent energizing and deenergizing; and (4) It would prevent most maintenance, service and support functions from being performed while the cables were deenergized. The commenter also pointed out that the occurrence of high-voltage cable faults is infrequent and the commenter has no experience of faults resulting in fire or causing shocks to miners. This commenter further stated that currently required circuit breakers and ground-fault systems provide adequate fault protection and that backup protection is provided by a ''Post Gulliver'' ground-fault system at the commenter's operation. Another commenter suggested that this requirement should only apply to cables which are not guarded and which are located in conveyor belt entries less than three feet away from the conveyor belt structure.

Another commenter suggested that the requirement should not apply where the mine operator can demonstrate that the seam height provides ample clearance of at least 6.5 feet or other methods are used to prevent any possible mechanical damage to high-voltage cables which may occur during removal of conveyor belt structures. Another commenter indicated that the phrasing of the proposed rule led the commenter to believe that MSHA was referring to the complete removal of the conveyor belt structure (as would be the case for an advancing longwall). This commenter indicated that operators are concerned about application of the rule to the more common retreating longwall situation where it is part of the routine work to frequently remove sections of conveyor structure. This commenter indicated that procedures have been developed to ensure that this work can be done without risk of high-voltage cables creating a hazard.

In response to these commenters, the Agency has changed the language of the proposed rule. The final rule allows guarding or protection by elevation as another means of protecting cables from damage and to minimize danger of contact with energized cables. Proper guarding of cables in accordance with § 75.816 or protection afforded by proper elevation would minimize miner contact with cables and minimize damage to the cables. The Agency agrees that there are safety advantages in leaving the high-voltage cable energized if the cable is properly protected during belt structure installation and removal. Examples of safety equipment that would remain energized are methane monitors and illumination systems.

Section 75.821 Testing, Examination, and Maintenance

Section 75.821 of the final rule requires that a person, qualified to perform electrical work, test and examine equipment and circuits to detect and correct conditions that could lead to an accident and injury. The section requires the qualified person to verify by signature and date that the tests and examinations have been completed. This record will include any unsafe conditions and corrective actions taken. The section further requires that the records be kept and made available for at least one year. This section was derived, in part, from existing §§ 75.512—*Electric equipment; examination, testing and maintenance,* 75.512–2—*Frequency of examinations,* 75.800–3—*Testing, examination and maintenance of circuit breakers; procedures,* and 75.800–4—*Testing, examination, and maintenance of circuit breakers; record* which generally apply to electrical equipment underground. This section applies to high-voltage equipment on the longwall face or within 150 feet of the pillar workings.

Paragraph (a) of § 75.821 requires that persons, qualified in accordance with existing § 75.153—*Electrical work; qualified person,* test and examine high-voltage longwall equipment and circuits to protect miners from electrical or operational hazardous that may exist. As noted under the § 75.820 discussion, based on the recent Federal Mine Safety and Health Review Commission *Black Mesa* decision (22 FMSHRC 708, 715; June 30, 2000), § 75.153 requires that a 'person qualified' be knowledgeable of

high-, medium-, and low-voltage circuits and equipment. Consistent with this decision and for clarification purposes, the language of paragraph (a) has been modified in the same fashion as in § 75.820(a) to conform with the ruling under this decision and the plain meaning of § 75.153. Thus, under this paragraph as revised, a person must be qualified under § 75.153 to perform electrical work on ''all'' circuits and equipment, not just high-voltage circuits. Testing and examining high-voltage longwall equipment and circuits allows qualified persons to determine that the electrical protection, equipment grounding, permissibility, cable insulation, and control devices are properly maintained to prevent fire, electric shock, ignition or operational hazards from existing on the equipment. Keeping equipment free from these hazards is assured by the training and expertise of qualified electricians. Regular testing and examination of high-voltage equipment used in face areas assures that hazardous conditions are discovered and corrected before they can cause injuries to miners. The standard requires examinations and tests of high-voltage longwall equipment at least once every 7 days.

Examinations and tests include activating the ground-fault test circuit which is required by § 75.814(c) of this final rule. The standard assures that problems which arise during normal use of mining equipment will be identified and corrected, so that miners are not exposed to hazards. Activating the ground-fault test circuit will identify any damage or defects in the ground-fault circuit and therefore protect miners from being exposed to energized longwall equipment frames.

A commenter stated that 30 CFR part 75 requires mine operators to conduct a multitude of tests in the underground environment. The commenter further stated that these tests are normally conducted on a ''daily,'' ''weekly,'' or ''monthly'' basis, and that the proposed rule is confusing and can present a problem for those operations working under nontraditional schedules. The commenter recommended that for clarity and consistency, the phrase ''once every 7 days'' be removed and the word ''weekly'' be substituted. In response to this comment, circuits and equipment used in conjunction with high-voltage longwalls are frequently being moved and subjected to heavy use, increasing the likelihood of wear and breakdown. Because of this, it is extremely important that defects in circuits and equipment be detected as quickly as possible and repaired before the occurrence of related accidents and injuries. The Agency considers it very important that the required examinations and tests be conducted as frequently as possible from the standpoint of safety and practicability, and that an examination at least once every seven days rather than weekly provides this assurance. A requirement for a weekly examination can result in the equipment not being examined for as long as 13–14 days. In addition, the seven-day requirement is consistent with similar type requirements contained in regulations promulgated by the Agency pertaining to ventilation under §§ 75.312(b)(1)(ii)—*Main mine fan examinations and records* and 75.364(a)—*Weekly examination.* Another commenter suggested that the proposed provision was too vague and in order to eliminate confusion, submitted the following examination requirements: (1) Actuate each ground-fault test circuit required by § 75.814(c); (2) Examine the cable guarding and handling system to ensure that they are properly installed and protecting the cables; (3) Determine that explosion-proof components are maintained in permissible condition; (4) Actuate the emergency stop button and verify that the corresponding circuit-interrupting device opens; and (5) Verify that the face communication system is operational. Another commenter suggested that the proposed examination requirements were so comprehensive that it would take a skilled person two days and that the more limited examination suggested by the previous commenter would cover the essential safety aspects.

In response to the comments regarding adoption of less time-consuming examination requirements, the complex high-voltage longwall mining system contains numerous cables, conductors, and pieces of equipment that require time-consuming examinations to assure safe operating conditions. Although proper circuit and equipment maintenance requires both visual and physical examinations, most examinations are visual. In addition, testing of circuits and equipment routinely includes activating available test switches to verify proper operation and causes the protective devices to open. High-voltage longwall equipment contains circuit protective devices that are mounted in heavily constructed explosion-proof enclosures containing large bolted covers and cables that are protected by heavily constructed guarding. The proposed rule required, in part, that a determination be made that protective devices, in some cases contained within these enclosures, and cables protected by the described guarding, be inspected to assure proper maintenance. The Agency believes that verification of proper maintenance regarding these items would not require, in all cases, removal of the equipment covers and cable guards in order to make this determination. Some protective device settings do not change, so frequent removal of covers to gain access for inspection serves no useful purpose and reduces safety if covers are not properly replaced. Removing and replacing guards that are installed to provide mechanical protection for cables, without good reason, could likewise result in an unsafe condition if not properly replaced.

Since 1970, Title 30 CFR has contained an examination, test, and maintenance requirement for electric equipment that is more basic than § 75.821. The Agency has been asked on several occasions to describe the required extent of proper examination of circuits and equipment. Since there are so many varieties of circuits and equipment in use in mines, it is impractical to describe a specific inspection procedure that applies to all circuits and equipment in all instances.

Consequently, a general type inspection procedure, such as that contained in this final rule, is necessary. The amount of detail needed for a given inspection is normally determined on a case-by-case basis, as the inspection takes place. For example, the testing of ground monitors would normally only require simple activation of readily available test switches; however, findings revealed during this portion of the inspection of the longwall circuits and equipment may indicate a need for more thorough examinations and tests. For example, if an ohm meter test determined that a condition existed in a cable, such as an inadvertent connection between a pilot wire and ground wire rendering a ground monitor inoperative, further examination and correction would be required to establish effective ground monitoring. For these reasons, the Agency concludes that the final rule require general type examinations and tests be conducted. Therefore, except for the change based on the *Black Mesa* decision, paragraph (a) of this section remains as proposed.

Paragraph (b) of the final rule, like the proposed rule, requires that each ground-wire monitor and corresponding circuit be examined and tested at least once each 30 days to verify that it is operating properly and will cause the corresponding circuit-interrupting device to open. This procedure assures that ground-wire monitors and corresponding circuit-interrupting

devices will operate properly to deenergize the circuits that they monitor. A commenter suggested that the requirement for testing of ground-wire monitors be relocated to another section of the rule, or possibly § 75.803—*Fail safe ground check circuits on high-voltage resistance grounded systems.* The Agency has determined that the important safety protection provided by these devices and their use on operating high-voltage longwall equipment necessitates placing ground monitor testing requirements in this section of the final rule. This is required in addition to other relevant testing requirements for other protective systems on high-voltage longwall equipment.

Another commenter suggested that the testing be limited to the operation of appropriate control circuit test devices in the power center or high-voltage motor-starter enclosure, and indicated that it should not be necessary to open any explosion-proof enclosure or to disconnect any ground wire while testing a ground-wire monitor. These commenters suggested that language be added to the provision that specifies the test be initiated by operating the test switch provided as part of the ground-wire monitor, or a similar switch installed in the power center or the high-voltage motor-starter enclosure. As stated above, proper examination and testing of ground-wire monitors and associated circuits, which include pilot wires and grounding conductors, may require more than simple activation of a test switch that normally opens the pilot wire. Therefore, paragraph (b) of this section remains as proposed.

Paragraph (c) of the final rule requires equipment to be immediately removed from service or immediately repaired when examinations or tests reveal a fire, electric shock, ignition, or operational hazard. This provision assures that equipment which may pose a danger to miners will not be used until the hazardous condition is corrected. Some commenters stated that the term ''immediately'' should be added to this provision. These commenters indicated that it is of utmost importance that whenever tests and examinations reveal malfunctions and defects, equipment must be repaired or removed from service immediately. They pointed out that operators may be reluctant to shut down a longwall operation to make necessary corrections and that confrontational situations and any misinterpretations could be avoided by adding this clarification to the standard.

The Agency agrees with the commenter and has added the word ''immediately'' to § 75.821(c) of the final rule. ''Immediately'' is intended to reflect its plain meaning that the required action be without hesitation or delay. It is emphasized, however, that the rule is referring to those safety defects that are considered hazardous, as stated under § 75.821(c). For example, some conditions, such as bare energized conductors in cables or conductors, present fire, electric shock, ignition, and possibly even operational hazards and require either immediate removal from service or immediate repair. However, conditions may exist that would not require immediate shutdown of equipment, but due to the nature of the condition, would permit continued operation of the equipment until material or parts necessary to correct the condition are procured, or would permit orderly shutdown of equipment prior to repair. For example, § 75.816 of this final rule requires guarding of high-voltage cables in specific locations. Unless there are other extenuating circumstances such as damaged cable or bare conductors present, a torn portion of guarding material would not be judged a condition that would have to be corrected immediately. It is the Agency's intent that once a condition with the potential to result in a fire, electric shock, ignition, or operational hazard is revealed correction of the condition should begin immediately. This includes arranging for orderly shutdown or removal of the equipment for repair until the necessary repair parts are obtained and installed.

Paragraph (d) of the final rule, like the proposed rule, requires the person who performs examinations and tests to certify by signature and date that they have been conducted. Also, a record is required for any unsafe condition found and any corrective action taken. This unsafe condition need not be an immediate hazard to be reported. In addition, certifications and records are required to be kept for at least one year and made available at the mine for inspection by authorized representatives of the Secretary and representatives of miners at the mine. Records and certifications of tests and repairs are valuable tools for mine operators and can be used to point out patterns of equipment defects and facilitate improvements in equipment maintenance and design. These records and certifications will assist in identifying that the required examinations were conducted, and will also assist in the investigation of accidents.

A commenter suggested that requiring the examiner's signature is not necessary and eliminates other responsible persons from entering the information as is currently allowed. This commenter pointed out that the results of the examination could be allowed to be entered by the examiner or by a responsible mine official, or information could be transferred from a checklist filled out by the examiner. In response to this commenter, high-voltage longwalls contain complex circuits and equipment that require examinations and tests be conducted only by qualified persons knowledgeable about equipment function and operation. These persons routinely acquire this knowledge through numerous hours of education, training, and experience. Once inspections, including required examinations and tests, of high-voltage longwalls are conducted by qualified persons, it can be concluded that these individuals are the only ones that have the necessary detailed knowledge and understanding of the results of the inspection. Because of this, it is appropriate that only these persons certify by signature and date that the required examinations and tests have been conducted and that unsafe conditions found have been corrected and recorded. This approach is consistent with other examination and recordkeeping requirements promulgated by MSHA.

Another commenter suggested that the operator maintain a written record of each test, examination, repair or adjustment of all circuit breakers protecting high-voltage circuits which enter any underground area of the coal mine and that such records be maintained in a book approved by the Secretary. These commenters indicated that such records are necessary to assure that tests and examinations have been made and would indicate which pieces of electrical equipment were tested and examined and which ones were not. They suggested that a reduction in the amount of recordkeeping diminishes the operator's accountability to provide proof that all equipment has been tested and examined. In response to this commenter, even though existing § 75.512 requires examination of all electric equipment, proposed §§ 75.814 through 75.822 are specific to high-voltage longwall circuits and equipment and not just high-voltage circuit breakers. Since proper test, examination, and maintenance of circuits and equipment is considered to be of extreme importance for the protection of personnel, the Agency concluded it was necessary to draft an examination and testing standard for high-voltage longwall circuits and

equipment. As stated above, the wording of § 75.821(d), which in part, requires that the person who completes the examination and tests certify by signature and date that they have been conducted. This approach is generally consistent with requirements in other regulations promulgated by the Agency. This certification and recording requirement only pertains to high-voltage longwall systems, including associated low- and medium-voltage circuits and equipment. The requirements of § 75.512 remain in effect for circuits and equipment in the mine other than that used on high-voltage longwall systems. Therefore, paragraph (d) of this section remains as proposed.

Section 75.822 Underground High-Voltage Longwall Cables

Section 75.822 of the final rule is new, derived in part from existing § 75.804—*Underground high-voltage cables.* It has been added since the proposed rule in specific response to commenters, and is a logical outgrowth of this high-voltage longwall rulemaking. This section differs from the requirements of § 75.804 by permitting the use of high-voltage cables that have an insulated center ground-check conductor that is smaller than a No. 10 AWG conductor. The Agency developed this new provision in response to industry requests and to accommodate new cable design technology that can either eliminate or significantly minimize inter-machine arcing due to the reduction of current induced into the ground-check conductor. This new cable design technology developed from MSHA and the industry's experience with using smaller ground-monitor conductor sizes in high-voltage longwall cables under MSHA granted modifications. This experience, together with comments from the high-voltage longwall rulemaking process, caused MSHA to conclude that such cable designs should be permitted under the final rule. The development of affordable smaller conductors resulted directly from the high-voltage longwall equipment design and use experience under granted modifications.

Two commenters suggested that a regulation be developed to permit the use of high-voltage cables that have a center ground-check conductor smaller than a No. 10 AWG conductor that is presently required under § 75.804(a). The commenters further stated that MSHA has allowed the use of a smaller ground-check conductor for high-voltage cables through the use of § 101(c) of the Mine Act for petitions for modification. One of these commenters stated that the use of a center ground-check conductor can either eliminate or significantly minimize inter-machine arcing and also provides improved ground-check monitor performance by reducing induced current into the ground-check conductor.

The Agency agrees with these comments, and includes a new section permitting this cable design use in light of its experience with high-voltage longwall petitions. As noted above, these new cable design provisions arise from technology developments referenced by commenters in response to the proposed rule and from the high-voltage longwall experience under the petition process. This section includes requirements from § 75.804 and allows the use of high-voltage longwall equipment cables that are designed with a center ground-check insulated conductor smaller than No. 10 AWG and metallic shields around each power conductor. Acceptable cables are those manufactured to meet nationally recognized consensus standards, such as the Insulated Cable Engineers Association (ICEA) standards and, as provided by the final rule, are designed with a stranded ground-check conductor that is no smaller than No. 16 AWG and is located in the center interstice of the cable conductors. The national consensus standards are developed by recognized experts in their fields. These cables, through the Mine Act § 101(c) petition for modification process, have been used on longwall mining equipment for the past several years and provide the necessary protection from physical damage or stress to the No. 16 AWG center ground-check conductor.

For these reasons, the Agency has determined that allowing the use of a No. 16 AWG center ground-check conductor can provide equivalent or improved protection as provided by a regular No. 10 AWG conductor. Improved protection is provided by the No. 16 AWG ground-check conductor because it is located in the center of the cable creating cable conductor symmetry. This greatly minimizes induced currents and voltages that have been found to occur when using cables where the ground-check conductors are located in the interstices between the phase conductors. These induced currents and voltages can result in arcing, fire or ignition hazards. Using cables with No. 10 AWG conductors has required the installation of external arc-suppression devices to prevent induced currents and voltages. Therefore, permitting cables with No. 16 AWG conductors located in the center of the cables, brings a safer, more efficient, and less burdensome ground-wire monitor system to the mining industry. This small ground-check conductor size is not a requirement but is offered to give added flexibility to mine operators and to minimize their cost burden where feasible. This option became available to the coal industry and coal mine equipment manufacturers as it was developed and used in high-voltage longwall systems under the petition for modification process during the last seven years.

With the advent of high-voltage longwall face equipment, the development and use of No. 16 AWG ground-check conductors for high-voltage longwall equipment became an affordable technology with additional safety benefits. This standard also eliminates the need for § 75.804(a) petitions for modification on longwalls for this purpose and facilitates the use of improved high-voltage cable designs. These cable designs should reduce the hazards associated with locating severed ground-check conductors, thereby discouraging the bypassing of ground-wire monitors when a cable has experienced a broken or severed ground-check conductor. Mines using this cable design have reported less downtime by having to locate and repair broken or severed ground-check conductors.

A commenter recommended that the word ''metallic'' not be used to describe the shielding that surrounds the individual power conductors and that the rule should allow the use of other materials to be incorporated in the construction of the shielding. The commenter did not specify what other types of materials should be used as shielding around the power conductors. Experience indicates that use of high-voltage cables with metallic shielding that surrounds the individual power conductors provides the intended protection against electrical hazards. Thus, the Agency has retained the cable design specifications that incorporate metallic shielding around each power conductor.

Section 75.1002 Installation of Electric Equipment and Conductors; Permissibility

This section of the final rule is derived from existing §§ 75.1002—*Location of trolley wires, trolley feeder wires, high-voltage cables and transformers* and 75.1002–1—*Location of other electric equipment; requirements for permissibility* and addresses requirements for conductors and cables used in or inby the last open crosscut, and electric equipment and conductors and cables used within 150

feet of pillar workings. The final rule revises existing § 75.1002 and removes § 75.1002–1, which prohibited the use of high-voltage cables inby the last open crosscut and within 150 feet of pillar workings or longwall faces. It also revises § 75.1002 related to the use of permissible equipment in these areas.

Paragraph (a) of the final rule, like the existing rule and proposed rule, continues to require that only permissible electric equipment be located within 150 feet of pillar workings or longwall faces. This equipment is specifically designed to protect miners against fire and explosion hazards in the mining face areas such as the longwall face where methane gas would likely accumulate and possibly cause an ignition or explosion.

Paragraph (b) of the final rule, like the existing rule and proposed rule, limits the types of electric conductors and cables permitted in areas where permissible equipment is required. This section prohibits the installation of conductors such as trolley wires and trolley feeder wires in areas where permissible equipment is required. Such electric conductors could provide a ready ignition source and therefore must not be used where permissible equipment is required. Permissible equipment is defined under 30 CFR § 18.2—*Definitions* and under § 318(i) of the Mine Act. Such equipment is specifically approved by MSHA for use in fire and explosive hazardous areas. However, the new final paragraph (b)(1), like the proposed rule, permits the use of shielded high-voltage longwall cable. Such shielding and design protect against arcing and other electrical ignition hazards that may occur when the outer jacket material of the cable is damaged. The use of shielded high-voltage cables supplying power to permissible longwall equipment reduces the risk of fire or explosion in face areas since these cables have equivalent or superior mechanical and electrical protective characteristics. This equipment offers other improved safety features, such as short-circuit and ground-fault protection against shock, fire, and explosion hazards. The final rule continues to prohibit the use of such nonpermissible equipment not specifically approved by MSHA for use near the actual coal extraction areas where increased fire and explosion hazards exist.

The high-voltage longwall final rule does not apply to high-voltage continuous miner use within 150 feet of pillar workings. High-voltage continuous miner petitions granted under existing § 75.1002 (§ 75.1002(b) under this final rule) will remain in effect, and mine operators who do not have granted petitions in effect must file a petition for modification of § 75.1002(b) for the future use of high-voltage continuous miners.

In addition, the high-voltage longwall final rule does not apply to nonpermissible test and diagnostic equipment use. Previously granted petitions under existing § 75.1002–1(a) (§ 75.1002(a) under this final rule) will remain in effect. After the effective date of this rule, mine operators who do not have granted petitions in effect must file a petition for modification for the use of nonpermissible test and diagnostic equipment under § 75.1002(a).

In response to a commenter's suggestion, MSHA has added the term ''longwall faces'' to paragraph (b) of the section. While longwall faces are generally considered to be part of a pillar working, the use of this term more specifically identifies the place where conductors and cables can be used. The addition of this term also maintains consistency with paragraph (a). This term was used in proposed paragraph (a) to clarify that longwall faces are included as part of the pillar working.

Paragraph (b)(1) of the final rule, like the proposed rule, permits the use of shielded high-voltage cables supplying power to permissible longwall equipment. Paragraphs (b)(2) through (b)(4) of the final rule, like the existing standards, permit the use of conductors and cables of intrinsically safe circuits, and cables and conductors supplying power to low- and medium-voltage permissible equipment in or inby the last open crosscut and within 150 feet of pillar workings or longwall faces.

Petitions for Modification

On the effective date of this final rule, all existing petitions for modification for high-voltage longwall use under § 75.1002 will be superseded. Operators are thereafter required to comply with the provisions of this final rule.

Derivation Table

The following derivation table lists: (1) Each section number of the final rule and (2) The section number of the standard from which the section is derived (existing section).

DERIVATION TABLE

Final rule	Existing section
75.2	Partly new.
75.813	N/A.
75.814(a)(1)	75.518–1 & 75.800.
75.814(a)(2)	N/A.
75.814(a)(3)	75.802.
75.814(a)(4)	75.800.

DERIVATION TABLE—Continued

Final rule	Existing section
75.814(a)(5) & (6)	N/A.
75.814(a)(7)	75.800.
75.814(b), (c) & (d)	N/A.
75.814(e)	New (75.518–1).
75.815(a) & (b)	75.808.
75.815(c)	75.520.
75.815(d)(1)	75.601 & 75.808.
75.815(d)(2)	75.705.
75.815(d)(3)	75.511.
75.815(e)	75.520.
75.816 & 75.817	75.807.
75.818(a)	75.705–6 and 75.812.
75.818(b)	75.705–7 & 75.705–8.
75.819	N/A.
75.820	75.153, 75.509, 75.511 & 75.705.
75.821	75.512, 75.512–1, 75.800–3 & 75.800–4.
75.822	N/A.
75.1002 (revised)	75.1002, 75.1002–1.

N/A: Not Applicable.

Distribution Table

The following distribution table lists: (1) Each section number of the existing standards and (2) The section number of the final rule which contains provisions derived from the corresponding existing section.

DISTRIBUTION TABLE

Existing section	Final rule
75.2	Partly new 75.2.
NA	75.813.
75.518–1 & 75.808	75.814(a)(1).
NA	75.814(a)(2).
75.802	75.814(a)(3).
75.800	75.814(a)(4).
NA	75.814(a)(5) & (6).
75.800	75.814(7).
NA	75.814(b), (c) & (d).
New (75.518–1)	75.814 (e).
75.808	75.815 (a) & (b).
75.520	75.815 (c).
75.601 & 75.808	75.815 (d)(1).
75.705	75.815 (d)(2).
75.511	75.815 (d)(3).
75.520	75.815 (e).
75.807	75.816 & 75.817.
75.705–6 & 75.812	75.818 (a).
75.705–7 & 75.705–8	75.818 (b).
NA	75.819.
75.153, 75.509, 75.511 75.705.	75.820.
75.512, 75.512–1, 75.800–3 & 75.800–4.	75.821.
NA	75.822.
75.1002 (Revised) & 75.1002–1 (Removed).	75.1002.

NA—Not Applicable.

III. Paperwork Reduction Act

The information collection requirements contained in this final rule

have been submitted to the Office of Management and Budget (OMB) for review under the Paperwork Reduction Act of 1995 (44 U.S.C. 3501–3520), as implemented by OMB in regulations at 5 CFR part 1320. The Paperwork Reduction Act of 1995 (PRA 95) defines collection of information as ''the obtaining, causing to be obtained, soliciting, or requiring the disclosure to third parties or the public of facts or opinions by or for an agency regardless of form or format.''

This rule contains information collection requirements for high-voltage longwall operators in § 18.53(h), § 75.820(b), § 75.820(e) and § 75.821(d). Annual paperwork burden hours and costs from these provisions are given in the following table. The total first year paperwork burden hours and costs of the rule are 5,736 hours and $163,929, respectively. The total burden hours and costs in each year thereafter will be 5,732 hours and $163,806, respectively.

Manufacturers seeking approval for longwall equipment continue to be required to submit applications for approval including related drawings, drawing lists, specifications, wiring diagrams, and descriptions. The paperwork burden for this application process is approved as part of a petition for modification, under OMB Control Number 1219–0065.

The information collection requirements contained in this rule for part 75 were submitted to OMB for review under the Paperwork Reduction Act of 1995 and were approved under OMB Control Number 1219–0116. This Control Number, however, expired in 1994, and the information requirements have been resubmitted to OMB for reinstatement. In accordance with § 1320.11(h) of the implementing regulations, OMB has 60 days from today's publication date in which to approve, disapprove, or instruct MSHA to make a change to the information collection requirements in this final rule.

TABLE OF ANNUAL BURDEN HOURS AND COSTS FROM THE RULE

	Annual burden Hours in first year	Annual burden hours for each year thereafter	Annual burden costs in first year	Annual burden costs for each year thereafter
Section 18.53(h)	7	3	$247	$124
Section 75.820(b) and (e)	1604	1604	45,831	45,831
Section 75.821(d)	4125	4125	117,851	117,851
Total	5736	5732	163,929	163,806

IV. Executive Order 12866 and Regulatory Flexibility Act

Executive Order 12866 requires that regulatory agencies assess both the costs and benefits of regulations. MSHA has determined that this final rule will not have an annual effect of $100 million or more on the economy and that, therefore, they are not an economically significant regulatory action pursuant to § 3(f)(1) of Executive Order (E.O.) 12866. However, we have determined that this final rule is significant under § 3(f)(4) of E.O. 12866, which defines a significant regulatory action as one that may ''* * * raise novel legal or policy issues arising out of legal mandates, the President's priorities, or the principles set forth in the Executive Order.'' MSHA completed a Regulatory Economic Analysis (REA) in which the economic impact of the rule is estimated. The REA is available from MSHA and is summarized as follows.

Population-at-Risk

MSHA estimates that this rulemaking would initially affect approximately 14,229 miners at 43 underground coal mines and six mines employing about 1,667 miners that would begin using high-voltage longwall equipment in the first year of the rule. The rule would not increase costs to small mines, which MSHA has traditionally defined as having fewer than 20 employees, because such mines do not use longwall equipment.

Benefits

The more stringent criteria and design features associated with high-voltage systems, such as compartment covers that are interlocked to prevent access to energized high-voltage conductors and equipment designed to facilitate safe testing procedures, decrease the likelihood of electrical accidents. In addition, high-voltage cables are required to be shielded around each conductor (SHD type) whereas medium-voltage cables can be shielded around the circumference of the cable (SHC type). The SHD cables are safer than the SHC cables because shielding the individual power conductors reduces the possibility of a short circuit that can cause a fire, or a shock and burn hazard when a miner touches a cable. The SHD shielding reduces the possibility of a shock hazard because an exposed energized conductor will contact the SHD shielding and activate the ground-fault protection, which removes power to the cable. The use of high-voltage SHD cables reduces the chances of cable damage which, in turn, reduces the chances of a miner coming into contact with an energized conductor(s).

Further, the use of high voltage in longwall mining operations may reduce the number of power cables running between various pieces of longwall equipment. In certain situations, the cables may also be smaller, for example, 5,000-volt (high-voltage) power cables are smaller and weigh less than 1,000-volt (medium-voltage) power cables. As a result of fewer and lighter power cables, the risk of injuries from handling power cables during longwall installation, movement, or replacement may be reduced.

Increased productivity gains can be realized when using high voltage rather than medium voltage. In cases where medium voltage is used to power larger motors and heavier duty longwall equipment, current (amperes) can increase, causing motors and/or cables to overheat. However, if high voltage rather than medium voltage is used to power the larger motors and heavier duty longwall equipment, current (amperes) is reduced, and the risk of overheating motors and/or cables diminishes. Also, motor start-up is easier when using high voltage. This increased reliability may reduce the amount of longwall equipment downtime, thereby enhancing coal productivity.

Section 75.818(b)(1) and (2) requires that high-voltage insulated gloves, sleeves, and other insulated personal protective equipment be rated as Class 1 or higher, be visibly examined before each use for signs of damage, and that such protective equipment be removed

from the underground area of the mine when damaged or defective.

Section 75.818(b)(3) requires that insulated personal protective equipment be electrically tested every six months.

Section 75.820(d)(3) requires qualified electricians to wear properly rated rubber gloves in order to perform troubleshooting and testing on low- and medium-voltage circuits in a high-voltage compartment. Currently, petitions for modification do not have this requirement. Thus, § 75.820(d)(3) provides additional safety protection during this troubleshooting and testing.

Finally, the rule continues the same electrical safety requirements developed in the petitions for modification to use high-voltage longwalls.

Compliance Costs

This rule will result in yearly net savings of $23,083,980. This includes a savings per conversion of $6,753,851 attributed to each medium-voltage longwall unit that converts to high-voltage usage. These conversion savings consist of $6,733,280 for accelerated production savings per unit, and $20,571 for filed petition savings per unit.

The net economic effect of the rule includes substantially increased productivity and cost savings for each longwall unit that converts to high-voltage equipment and cables, and a small cost annually for each longwall unit that uses high-voltage equipment and cables. Accelerated production savings are savings due to the more productive high-voltage equipment being used sooner rather than later. Filed petition savings refer to savings due to eliminating legal fees and expenses connected with a filed petition. The elimination of the need to file petitions for modification to use high-voltage longwalls will reduce the costs associated with the petition process and will require less paperwork.

MSHA estimates that the petition process would have imposed costs for legal fees and expenses of about $5,250 for an unopposed petition filing and $112,500 for an opposed petition requiring litigation, including proceedings before Administrative Law Judges, the Assistant Secretary, and courts of appeal. Since 14.3 percent (1 out of 7) of all petitions granted by MSHA in 1998 were contested and required an ALJ's decision, MSHA assumes this same percentage would be contested were future petitions to be filed. Thus, elimination of the petition process would generate a one-time filed petition savings per high-voltage longwall unit of $20,571.

In addition, eliminating the petition process would produce further savings for medium-voltage longwall units that convert to high-voltage units. The rule would eliminate delayed production that could occur as a result of a mine not being able to synchronize initial start-up of its high-voltage longwall equipment with the granting of a petition. The medium-voltage longwall units that convert would have the opportunity to obtain higher productivity yields from the use of high voltage sooner under the rule than under current procedures. Based on an average 66.1 percent increased productivity of high-voltage longwalls over lower-voltage longwalls and an average delayed production time of 78 working days, MSHA estimates that the one-time conversion accelerated production savings due to the petition process would be about $6,733,280 per high-voltage longwall unit.

With respect to individual provisions concerning the 43 existing mines that currently use high-voltage equipment and the medium-voltage longwall units that would shift to high voltage, § 75.818(b)(4) would require mines to perform an electrical test of personal protective equipment every six months. Section 75.820(d)(3) would require electricians to wear properly-rated rubber gloves to perform troubleshooting and testing on low- and medium-voltage circuits that are contained in a compartment with high-voltage circuits. Compliance cost increases of $90 per longwall unit and $168 per longwall unit are identified with §§ 75.818(b)(4) and 75.820(d)(3), respectively.

Economic Impact

The rule enhances productivity in those affected mines because it allows more efficient high-voltage longwall equipment to be established more rapidly in the relatively few underground coal mines in which it can be profitably employed. MSHA has concluded that the rule will have only a small (but favorable) effect on coal output, price, and profitability.

Feasibility

MSHA has concluded that the requirements of the final rule are both technologically and economically feasible.

This final rule is not a technology-forcing standard and does not involve activities on the frontiers of scientific knowledge. The equipment testing, recordkeeping, and rubber glove requirements all involve standard procedures or simple, off-the-shelf technologies. Other provisions of the final rule will reduce recordkeeping and petition requirements.

The final rule is clearly economically feasible insofar as it provides a yearly net *savings* of $23.08 million to high-voltage longwall mines. This includes a one-time savings of $6.75 million for each longwall mine that converts to high voltage as well as annual costs of $258 for each high-voltage longwall mine.

Regulatory Flexibility Act and Small Business Regulatory Enforcement Fairness Act (SBREFA)

The Regulatory Flexibility Act (RFA) requires regulatory agencies to consider a rule's impact on small entities. For the purposes of the RFA and this certification, MSHA has analyzed the impact of the final rule and has determined that there will be a cost savings to small entities affected by this rule.

MSHA will mail a copy of the final rule, including the preamble and regulatory flexibility certification statement, to all underground coal mine operators and miners' representatives. The final rule will also be placed on MSHA's Internet Homepage at *http://www.msha.gov,* under Statutory and Regulatory Information.

In accordance with § 605 of the RFA, MSHA certifies that this final rule will not have a significant adverse economic impact on a substantial number of small entities. No small governmental jurisdictions or nonprofit organizations are affected.

Under the Small Business Regulatory Enforcement Fairness Act amendments to the RFA, MSHA must include in the final rule a factual basis for this certification. The Agency also must publish the regulatory flexibility certification in the **Federal Register**, along with its factual basis.

Factual Basis for Certification

The Agency compared the gross costs of the rule for small mines in each sector to the revenue for that sector for both size categories analyzed (MSHA and Small Business Administration 'small entity' definitions). Given that the gross compliance costs for small mines is substantially less than 1 percent of revenue and that net costs are negative, MSHA concludes that there is no significant cost impact of the rule on small entities that use high-voltage longwall units.

Other small entities potentially affected by the rule are small manufacturers of high-voltage longwall equipment. MSHA concludes that the rule would not have a significant impact upon a substantial number of small

manufacturers of high-voltage longwall equipment.

MSHA also has determined that there are no initial net compliance costs as a result of this rule. The final rule results in a net savings. Currently mine operators are required to file a petition for modification to use high-voltage longwall equipment. This is a costly and lengthy administrative process. This final rule increases safety, effectiveness, and efficiency in the use of high-voltage longwall equipment. The lengthy approval process will be eliminated. The Agency estimates that six existing longwall mines will convert to high voltage and an additional three new longwall mines each year will elect to adopt high-voltage technology in the future.

Unfunded Mandates Reform Act of 1995

For purposes of the Unfunded Mandates Reform Act of 1995, as well as E.O. 12875, this rule does not include any Federal mandate that may result in increased expenditures by State, local, and tribal governments, or increased expenditures by the private sector of more than $100 million. MSHA is not aware of any State, local, or tribal government that either owns or operates underground coal mines.

Executive Order 13132

MSHA has reviewed this rule in accordance with Executive Order 13132 regarding federalism, and has determined that it does not have ''federalism implications.'' The rule does not ''have substantial direct effects on the States, on the relationship between the national government and the States, or on the distribution of power and responsibilities among the various levels of government.'' There are no underground coal mines or manufacturers of high-voltage longwall equipment owned or operated by any State governments.

Executive Order 13045

In accordance with Executive Order 13045, MSHA has evaluated the environmental health and safety effect of the final rule on children. The Agency has determined that the final rule will have no effect on children.

Executive Order 13084

In accordance with Executive Order 13084, MSHA certifies that the high-voltage longwall final rule does not impose substantial direct compliance costs on Indian tribal governments. MSHA is not aware of any Indian tribal governments which either own or operate underground coal mines or manufacturers high-voltage longwall equipment.

Executive Order 12630

This rule is not subject to Executive Order 12630, Governmental Actions and Interference with Constitutionally Protected Property Rights, because it does not involve implementation of a policy with takings implications.

Executive Order 12988

This regulation has been drafted and reviewed in accordance with Executive Order 12988, Civil Justice Reform, and will not unduly burden the Federal court system. The regulation has been written so as to minimize litigation and provide a clear legal standard for affected conduct, and has been reviewed carefully to eliminate drafting errors and ambiguities.

Executive Order 13211 (Energy)

In accordance with Executive Order 13211, MSHA has reviewed this final rule for its energy impacts. We have determined that the Executive Order does not apply to this final rule for the following reasons. One, this rulemaking is not considered a ''significant regulatory action'' under Executive Order 12866 and therefore the action does not meet the criteria listed in Executive Order 13211 requiring a Statement of Energy Effects. Two, the proposed rule was published before the effective date of the Executive Order. Three, MSHA has determined that this final rule will not have any adverse effects on energy supply, distribution, or use. To the contrary, as summarized in the economic analysis, MSHA expects accelerated coal production because of the implementation of this final rule. Therefore, no reasonable alternatives to this action are necessary.

List of Subjects

30 CFR Part 18

Approval regulations, Electric motor-driven mine equipment and accessories, Mine safety and health.

30 CFR Part 75

High-voltage longwall, Incorporation by reference, Mandatory safety standards, Mine safety and health, Underground coal mines.

Dated: February 25, 2002.

Dave D. Lauriski,

Assistant Secretary of Labor for Mine Safety and Health.

For the reasons set out in the preamble, chapter I of title 30 of the Code of Federal Regulations is amended as follows:

PART 18—ELECTRIC MOTOR-DRIVEN MINE EQUIPMENT AND ACCESSORIES

1. The authority citation for part 18 continues to read as follows:

Authority: 30 U.S.C. 957, 961.

2. Add § 18.53 to subpart B of part 18 to read as follows:

§ 18.53 High-voltage longwall mining systems.

(a) In each high-voltage motor-starter enclosure, with the exception of a controller on a high-voltage shearer, the disconnect device compartment, control/communications compartment, and motor contactor compartment must be separated by barriers or partitions to prevent exposure of personnel to energized high-voltage conductors or parts. In each motor-starter enclosure on a high-voltage shearer, the high-voltage components must be separated from lower voltage components by barriers or partitions to prevent exposure of personnel to energized high-voltage conductors or parts. Barriers or partitions must be constructed of grounded metal or nonconductive insulating board.

(b) Each cover of a compartment in the high-voltage motor-starter enclosure containing high-voltage components must be equipped with at least two interlock switches arranged to automatically deenergize the high-voltage components within that compartment when the cover is removed.

(c) Circuit-interrupting devices must be designed and installed to prevent automatic reclosure.

(d) Transformers with high-voltage primary windings that supply control voltages must incorporate grounded electrostatic (Faraday) shielding between the primary and secondary windings. The shielding must be connected to equipment ground by a minimum No. 12 AWG grounding conductor. The secondary nominal voltage must not exceed 120 volts, line to line.

(e) Test circuits must be provided for checking the condition of ground-wire monitors and ground-fault protection without exposing personnel to energized circuits. Each ground-test circuit must inject a primary current of 50 percent or less of the current rating of the grounding resistor through the current transformer and cause each corresponding circuit-interrupting device to open.

(f) Each motor-starter enclosure, with the exception of a controller on a high-voltage shearer, must be equipped with

a disconnect device installed to deenergize all high-voltage power conductors extending from the enclosure when the device is in the ''open'' position.

(1) When multiple disconnect devices located in the same enclosure are used to satisfy the above requirement they must be mechanically connected to provide simultaneous operation by one handle.

(2) The disconnect device must be rated for the maximum phase-to-phase voltage and the full-load current of the circuit in which it is located, and installed so that—

(i) Visual observation determines that the contacts are open without removing any cover;

(ii) The load-side power conductors are grounded when the device is in the ''open'' position;

(iii) The device can be locked in the ''open'' position;

(iv) When located in an explosion-proof enclosure, the device must be designed and installed to cause the current to be interrupted automatically prior to the opening of the contacts; and

(v) When located in a non-explosion-proof enclosure, the device must be designed and installed to cause the current to be interrupted automatically prior to the opening of the contacts, or the device must be capable of interrupting the full-load current of the circuit.

(g) Control circuits for the high-voltage motor starters must be interlocked with the disconnect device so that—

(1) The control circuit can be operated with an auxiliary switch in the ''test'' position only when the disconnect device is in the open and grounded position; and

(2) The control circuit can be operated with the auxiliary switch in the ''normal'' position only when the disconnect switch is in the closed position.

(h) A study to determine the minimum available fault current must be submitted to MSHA to ensure adequate protection for the length and conductor size of the longwall motor, shearer and trailing cables.

(i) Longwall motor and shearer cables with nominal voltages greater than 660 volts must be made of a shielded construction with a grounded metallic shield around each power conductor.

(j) High-voltage motor and shearer circuits must be provided with instantaneous ground-fault protection of not more than 0.125-amperes. Current transformers used for this protection must be of the single-window type and must be installed to encircle all three phase conductors.

(k) Safeguards against corona must be provided on all 4,160 voltage circuits in explosion-proof enclosures.

(l) The maximum pressure rise within an explosion-proof enclosure containing high-voltage switchgear must be limited to 0.83 times the design pressure.

(m) High-voltage electrical components located in high-voltage explosion-proof enclosures must not be coplanar with a single plane flame-arresting path.

(n) Rigid insulation between high-voltage terminals (Phase-to-Phase or Phase-to-Ground) must be designed with creepage distances in accordance with the following table:

MINIMUM CREEPAGE DISTANCES

Phase to phase voltage	Points of measure	Minimum creepage distances (inches) for comparative tracking index (CTI) range [1]			
		CTI≥500	380≤CTI<500	175≤CTI<380	CTI<175
2,400	Ø–Ø	1.50	1.95	2.40	2.90
	Ø–G	1.00	1.25	1.55	1.85
4,160	Ø–Ø	2.40	3.15	3.90	4.65
	Ø–G	1.50	1.95	2.40	2.90

[1] Assumes that all insulation is rated for the applied voltage or higher.

(o) Explosion-proof motor-starter enclosures must be designed to establish the minimum free distance (MFD) between the wall or cover of the enclosure and uninsulated electrical conductors inside the enclosure in accordance with the following table:

HIGH-VOLTAGE MINIMUM FREE DISTANCES (MFD)

Wall/cover thickness (in)	Steel MFD (in)			Aluminum MFD (in)		
	A [1]	B [2]	C [3]	A	B	C
¼	2.8	4.3	5.8	[4] NA	[4] NA	[4] NA
⅜	1.8	2.3	3.9	8.6	12.8	18.1
½	*1.2	2.0	2.7	6.5	9.8	13.0
⅝	*0.9	1.5	2.1	5.1	7.7	10.4
¾	*0.6	*1.1	1.6	4.1	6.3	8.6
1	(*)	*0.6	*1.0	2.9	4.5	6.2

Note *: The minimum electrical clearances must still be maintained.

[1] Column A specifies the MFD for enclosures that have available 3-phase bolted short-circuit currents of 10,000 amperes rms or less.

[2] Column B specifies the MFD for enclosures that have a maximum available 3-phase bolted short-circuit currents greater than 10,000 and less than or equal to 15,000 amperes rms.

[3] Column C specifies the MFD for enclosures that have a maximum available 3-phase bolted short-circuit currents greater than 15,000 and less than or equal to 20,000 amperes rms.

[4] Not Applicable—MSHA doesn't allow aluminum wall or covers to be ¼ inch or less in thickness (Section 18.31).

(1) For values not included in the table, the following formulas on which the table is based may be used to determine the minimum free distance.

(i) Steel Wall/Cover:

$$MFD = 2.296 \times 10^{-6} \frac{(35 + 105\ (C)\ (I_{sc})\ (t))}{(C)(d)} - \frac{d}{2}$$

(ii) Aluminum Wall/Cover:

$$MFD = 1.032 \times 10^{-5} \frac{(35 + 105\ (C)\ (I_{sc})\ (t))}{(C)(d)} - \frac{d}{2}$$

Where C is 1.4 for 2,400 volt systems or 3.0 for 4,160 volt systems, I_{sc} is the 3-phase short circuit current in amperes of the system, t is the clearing time in seconds of the outby circuit-interrupting device and d is the thickness in inches of the metal wall/cover adjacent to an area of potential arcing.

(2) The minimum free distance must be increased by 1.5 inches for 4,160 volt systems and 0.7 inches for 2,400 volt systems when the adjacent wall area is the top of the enclosure. If a steel shield is mounted in conjunction with an aluminum wall or cover, the thickness of the steel shield is used to determine the minimum free distances.

(p) The following static pressure test must be performed on each prototype design of explosion-proof enclosures containing high-voltage switchgear prior to the explosion tests. The static pressure test must also be performed on every explosion-proof enclosure containing high-voltage switchgear, at the time of manufacture, unless the manufacturer uses an MSHA accepted quality assurance procedure covering inspection of the enclosure. Procedures must include a detailed check of parts against the drawings to determine that the parts and the drawings coincide and that the minimum requirements stated in part 18 have been followed with respect to materials, dimensions, configuration and workmanship.

(1) *Test procedure.* (i) The enclosure must be internally pressurized to at least the design pressure, maintaining the pressure for a minimum of 10 seconds.

(ii) Following the pressure hold, the pressure must be removed and the pressurizing agent removed from the enclosure.

(2) *Acceptable performance.* (i) The enclosure during pressurization must not exhibit—

(A) Leakage through welds or casting; or

(B) Rupture of any part that affects the explosion-proof integrity of the enclosure.

(ii) The enclosure following removal of the pressurizing agents must not exhibit—

(A) Visible cracks in welds;

(B) Permanent deformation exceeding 0.040 inches per linear foot; or

(C) Excessive clearances along flame-arresting paths following retightening of fastenings, as necessary.

PART 75—MANDATORY SAFETY STANDARDS—UNDERGROUND COAL MINES

3. The authority citation for part 75 continues to read as follows:

Authority: 30 U.S.C. 811.

4. Amend § 75.2 by adding the following definitions:

§ 75.2 Definitions.

* * * * *

Adequate interrupting capacity. The ability of an electrical protective device, based upon its required and intended application, to safely interrupt values of current in excess of its trip setting or melting point.

* * * * *

Approval documentation. Formal papers issued by the Mine Safety and Health Administration which describe and illustrate the complete assembly of electrical machinery or accessories which have met the applicable requirements of 30 CFR part 18.

* * * * *

Circuit-interrupting device. A device designed to open and close a circuit by nonautomatic means and to open the circuit automatically at a predetermined overcurrent value without damage to the device when operated within its rating.

* * * * *

Ground fault or grounded phase. An unintentional connection between an electric circuit and the grounding system.

Motor-starter enclosure. An enclosure containing motor starting circuits and equipment.

Nominal voltage. The phase-to-phase or line-to-line root-mean-square value assigned to a circuit or system for designation of its voltage class, such as 480 or 4,160 volts. Actual voltage at which the circuit or system operates may vary from the nominal voltage within a range that permits satisfactory operation of equipment.

* * * * *

Short circuit. An abnormal connection of relatively low impedance, whether made accidentally or intentionally, between two points of different potential.

* * * * *

5. Part 75, Subpart I, Underground High-Voltage Distribution, is amended by adding §§ 75.813 through 75.822 and Appendix A under a new undesignated center heading, high-voltage longwalls, to read as follows:

Sec.

High-Voltage Longwalls

75.813 High-voltage longwalls; scope.
75.814 Electrical protection.
75.815 Disconnect devices.
75.816 Guarding of cables.
75.817 Cable handling and support systems.
75.818 Use of insulated cable handling equipment.
75.819 Motor-starter enclosures; barriers and interlocks.
75.820 Electrical work; troubleshooting and testing.
75.821 Testing, examination and maintenance.
75.822 Underground high-voltage longwall cables.
Appendix A to Subpart I—Diagrams of Inby and Outby Switching

* * * * *

High-Voltage Longwalls

§ 75.813 High-voltage longwalls; scope.

Sections 75.814 through 75.822 of this part are electrical safety standards that apply to high-voltage longwall circuits and equipment. All other existing standards in 30 CFR must also apply to these longwall circuits and equipment where appropriate.

§ 75.814 Electrical protection.

(a) High-voltage circuits must be protected against short circuits, overloads, ground faults, and undervoltages by circuit-interrupting devices of adequate interrupting capacity as follows:

(1) Current settings of short-circuit protective devices must not exceed the setting specified in approval documentation, or seventy-five percent of the minimum available phase-to-phase short-circuit current, whichever is less.

(2) Time-delay settings of short-circuit protective devices used to protect any cable extending from the section power center to a motor-starter enclosure must not exceed the settings specified in approval documentation, or 0.25-second, whichever is less. Time delay settings of short-circuit protective devices used to protect motor and shearer circuits must not exceed the settings specified in approval documentation, or 3 cycles, whichever is less.

(3) Ground-fault currents must be limited by a neutral grounding resistor to not more than—

(i) 6.5 amperes when the nominal voltage of the power circuit is 2,400 volts or less; or

(ii) 3.75 amperes when the nominal voltage of the power circuit exceeds 2,400 volts.

(4) High-voltage circuits extending from the section power center must be provided with—

(i) Ground-fault protection set to cause deenergization at not more than 40 percent of the current rating of the neutral grounding resistor;

(ii) A backup ground-fault detection device to cause deenergization when a ground fault occurs with the neutral grounding resistor open; and

(iii) Thermal protection for the grounding resistor that will deenergize the longwall power center if the resistor is subjected to a sustained ground fault. The thermal protection must operate at either 50 percent of the maximum temperature rise of the grounding resistor, or 150° C (302° F), whichever is less, and must open the ground-wire monitor circuit for the high-voltage circuit supplying the section power center. The thermal protection must not be dependent upon control power and may consist of a current transformer and overcurrent relay.

(5) High-voltage motor and shearer circuits must be provided with instantaneous ground-fault protection set at not more than 0.125-ampere.

(6) Time-delay settings of ground-fault protective devices used to provide coordination with the instantaneous ground-fault protection of motor and shearer circuits must not exceed 0.25-second.

(7) Undervoltage protection must be provided by a device which operates on loss of voltage to cause and maintain the interruption of power to a circuit to prevent automatic restarting of the equipment.

(b) Current transformers used for the ground-fault protection specified in paragraphs (a)(4)(i) and (5) of this section must be single window-type and must be installed to encircle all three phase conductors. Equipment safety grounding conductors must not pass through or be connected in series with ground-fault current transformers.

(c) Each ground-fault current device specified in paragraphs (a)(4)(i) and (5) of this section must be provided with a test circuit that will inject a primary current of 50 percent or less of the current rating of the grounding resistor through the current transformer and cause each corresponding circuit-interrupting device to open.

(d) Circuit-interrupting devices must not reclose automatically.

(e) Where two or more high-voltage cables are used to supply power to a common bus in a high-voltage enclosure, each cable must be provided with ground-wire monitoring. The ground-wire monitoring circuits must cause deenergization of each cable when either the ground-monitor or grounding conductor(s) of any cable become severed or open. On or after May 10, 2002, parallel connected cables on newly installed longwalls must be protected as follows:

(1) When one circuit-interrupting device is used to protect parallel connected cables, the circuit-interrupting device must be electrically interlocked with the cables so that the device will open when any cable is disconnected; or

(2) When two or more parallel circuit-interrupting devices are used to protect parallel connected cables, the circuit-interrupting devices must be mechanically and electrically interlocked. Mechanical interlocking must cause all devices to open simultaneously and electrical interlocking must cause all devices to open when any cable is disconnected.

§ 75.815 Disconnect devices.

(a) The section power center must be equipped with a main disconnecting device installed to deenergize all cables extending to longwall equipment when the device is in the ''open'' position. See Figures I–1 and I–2 in Appendix A to this subpart I.

(b) Disconnecting devices for motor-starter enclosures must be maintained in accordance with the approval requirements of paragraph (f) of § 18.53 of part 18 of this chapter. The compartment for the disconnect device must be provided with a caution label to warn miners against entering the compartment before deenergizing the incoming high-voltage circuits to the compartment.

(c) Disconnecting devices must be rated for the maximum phase-to-phase voltage of the circuit in which they are installed, and for the full-load current of the circuit that is supplied power through the device.

(d) Each disconnecting device must be designed and installed so that —

(1) Visual observation determines that the contacts are open without removing any cover;

(2) All load power conductors can be grounded when the device is in the ''open'' position; and

(3) The device can be locked in the ''open'' position.

(e) Disconnecting devices, except those installed in explosion-proof enclosures, must be capable of interrupting the full-load current of the circuit or designed and installed to cause the current to be interrupted automatically prior to the opening of the contacts of the device. Disconnecting devices installed in explosion-proof enclosures must be maintained in accordance with the approval requirements of paragraph (f)(2)(iv) of § 18.53 of part 18 of this chapter.

§ 75.816 Guarding of cables.

(a) High-voltage cables must be guarded at the following locations:

(1) Where persons regularly work or travel over or under the cables.

(2) Where the cables leave cable handling or support systems to extend to electric components.

(b) Guarding must minimize the possibility of miners contacting the cables and protect the cables from damage. The guarding must be made of grounded metal or nonconductive flame-resistant material.

§ 75.817 Cable handling and support systems.

Longwall mining equipment must be provided with cable-handling and support systems that are constructed, installed and maintained to minimize the possibility of miners contacting the cables and to protect the high-voltage cables from damage.

§ 75.818 Use of insulated cable handling equipment.

(a) Energized high-voltage cables must not be handled except when motor or shearer cables need to be trained. When cables need to be trained, high-voltage insulated gloves, mitts, hooks, tongs, slings, aprons, or other personal protective equipment capable of providing protection against shock hazard must be used to prevent direct contact with the cable.

(b) High-voltage insulated gloves, sleeves, and other insulated personal protective equipment must—

(1) Have a voltage rating of at least Class 1 (7,500 volts) that meets or

exceeds ASTM F496–97, ''Standard Specification for In-Service Care of Insulating Gloves and Sleeves'' (1997).

(2) Be examined before each use for visible signs of damage;

(3) Be removed from the underground area of the mine or destroyed when damaged or defective; and

(4) Be electrically tested every 6 months in accordance with publication ASTM F496–97. ASTM F496–97 (Standard Specification for In-Service Care of Insulating Gloves and Sleeves, 1997) is incorporated by reference and may be inspected at any Coal Mine Health and Safety District and Subdistrict Office, or at MSHA's Office of Standards, 4015 Wilson Boulevard, Arlington, VA., and at the Office of the Federal Register, 800 North Capitol Street, NW., Suite 700, Washington, DC. In addition, copies of the document can be purchased from the American Society for Testing and Materials, 100 Barr Harbor Drive, West Conshohocken, Pennsylvania 19428–2959. This incorporation by reference was approved by the Director of the Federal Register in accordance with 5 U.S.C. 552(a) and 1 CFR part 51.

§ 75.819 Motor-starter enclosures; barriers and interlocks.

Compartment separation and cover interlock switches for motor-starter enclosures must be maintained in accordance with the approval requirements of paragraphs (a) and (b) of § 18.53 of part 18 of this chapter.

§ 75.820 Electrical work; troubleshooting and testing.

(a) Electrical work on all circuits and equipment associated with high-voltage longwalls must be performed only by persons qualified under § 75.153 to perform electrical work on all circuits and equipment.

(b) Prior to performing electrical work, except for troubleshooting and testing of energized circuits and equipment as provided for in paragraph (d) of this section, a qualified person must do the following:

(1) Deenergize the circuit or equipment with a circuit-interrupting device.

(2) Open the circuit disconnecting device. On high-voltage circuits, ground the power conductors until work on the circuit is completed.

(3) Lock out the disconnecting device with a padlock. When more than one qualified person is performing work, each person must install an individual padlock.

(4) Tag the disconnecting device to identify each person working and the circuit or equipment on which work is being performed.

(c) Each padlock and tag must be removed only by the person who installed them, except that, if that person is unavailable at the mine, the lock and tag may be removed by a person authorized by the operator, provided—

(1) The authorized person is qualified under paragraph (a) of this section; and

(2) The operator ensures that the person who installed the lock and tag is aware of the removal before that person resumes work on the affected circuit or equipment.

(d) Troubleshooting and testing of energized circuits must be performed only—

(1) On low- and medium-voltage circuits;

(2) When the purpose of troubleshooting and testing is to determine voltages and currents; and

(3) By persons qualified to perform electrical work and who wear protective gloves on circuits that exceed 40 volts in accordance with the following table:

Circuit voltage	Type of glove required
Greater than 120 volts (nominal) (not intrinsically safe)	Rubber insulating gloves with leather protectors.
40 volts to 120 volts (nominal) (both intrinsically safe and non-intrinsically safe)	Either rubber insulating gloves with leather protectors or dry work gloves.
Greater than 120 volts (nominal) (intrinsically safe)	Either rubber insulating gloves with leather protectors or dry work gloves.

(4) Rubber insulating gloves must be rated at least for the nominal voltage of the circuit when the voltage of the circuit exceeds 120 volts nominal and is not intrinsically safe.

(e) Before troubleshooting and testing a low- or medium-voltage circuit contained in a compartment with a high-voltage circuit, the high-voltage circuit must be deenergized, disconnected, grounded, locked out and tagged in accordance with paragraph (b) of this section.

(f) Prior to the installation or removal of conveyor belt structure, high-voltage cables extending from the section power center to longwall equipment and located in the belt entries must be:

(1) Deenergized; or

(2) Guarded in accordance with § 75.816 of this part, at the location where the belt structure is being installed or removed; or

(3) Located at least 6.5 feet above the mine floor.

§ 75.821 Testing, examination and maintenance.

(a) At least once every 7 days, a person qualified in accordance with § 75.153 to perform electrical work on all circuits and equipment must test and examine each unit of high-voltage longwall equipment and circuits to determine that electrical protection, equipment grounding, permissibility, cable insulation, and control devices are being properly maintained to prevent fire, electrical shock, ignition, or operational hazards from existing on the equipment. Tests must include activating the ground-fault test circuit as required by § 75.814(c).

(b) Each ground-wire monitor and associated circuits must be examined and tested at least once each 30 days to verify proper operation and that it will cause the corresponding circuit-interrupting device to open.

(c) When examinations or tests of equipment reveal a fire, electrical shock, ignition, or operational hazard, the equipment must be removed from service immediately or repaired immediately.

(d) At the completion of examinations and tests required by this section, the person who makes the examinations and tests must certify by signature and date that they have been conducted. A record must be made of any unsafe condition found and any corrective action taken. Certifications and records must be kept for at least one year and must be made available for inspection by authorized representatives of the Secretary and representatives of miners.

§ 75.822 Underground high-voltage longwall cables.

In addition to the high-voltage cable design specifications in § 75.804 of this part, high-voltage cables for use on longwalls may be a type SHD cable with a center ground-check conductor no smaller than a No. 16 AWG stranded conductor. The cables must be MSHA accepted as flame-resistant under part 18 or approved under subpart K of part 7.

§ 75.1002–1 [Removed]

6. Remove § 75.1002–1.

7. Revise § 75.1002 to read as follows:

§ 75.1002 Installation of electric equipment and conductors; permissibility.

(a) Electric equipment must be permissible and maintained in a permissible condition when such equipment is located within 150 feet of pillar workings or longwall faces.

(b) Electric conductors and cables installed in or inby the last open crosscut or within 150 feet of pillar workings or longwall faces must be—

(1) Shielded high-voltage cables supplying power to permissible longwall equipment;

(2) Interconnecting conductors and cables of permissible longwall equipment;

(3) Conductors and cables of intrinsically safe circuits; and

(4) Cables and conductors supplying power to low- and medium-voltage permissible equipment.

BILLING CODE 4510–43–P

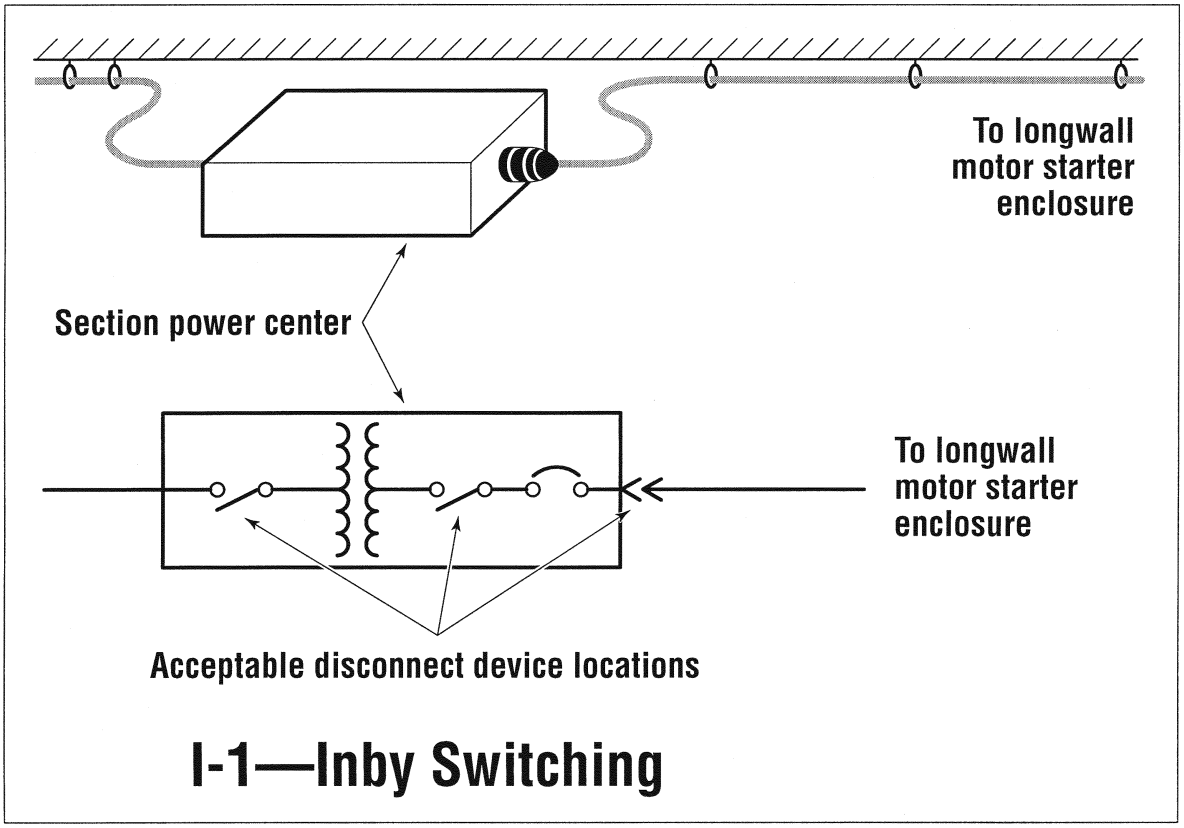

I-1—Inby Switching

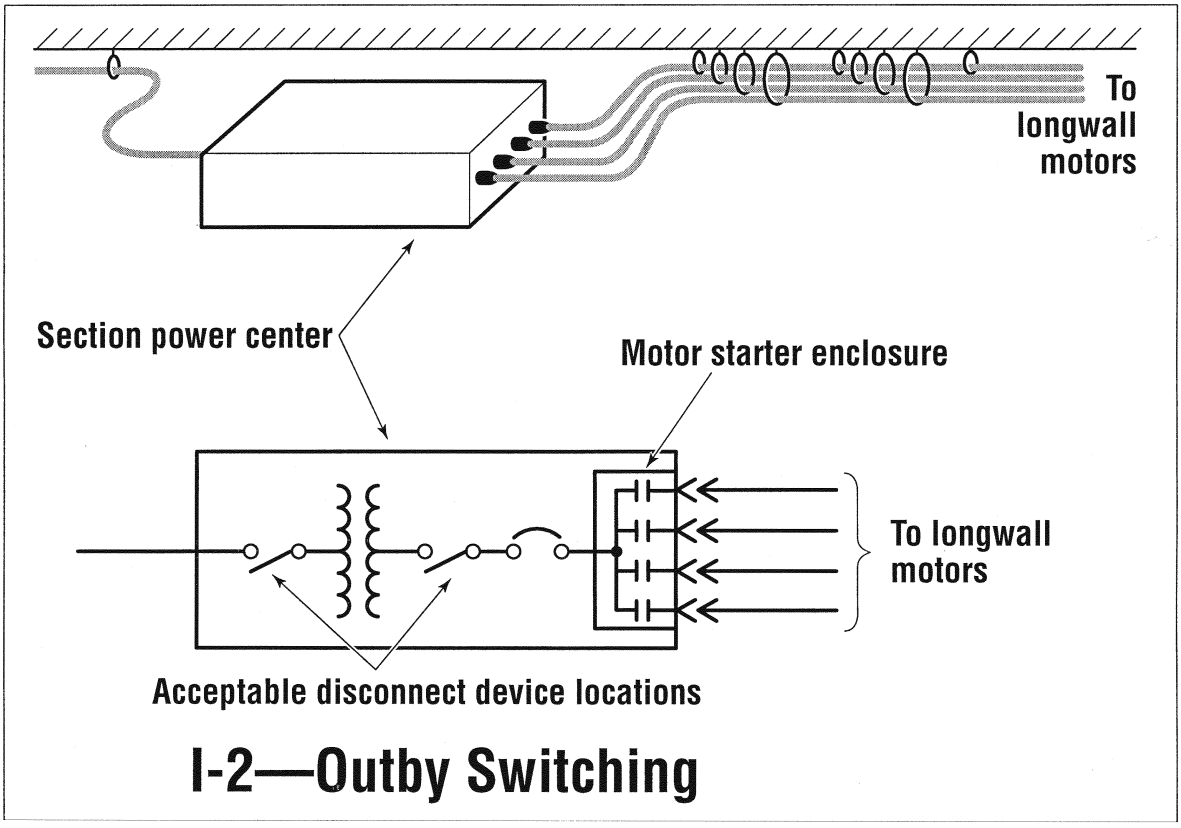

I-2—Outby Switching

[FR Doc. 02–4863 Filed 3–8–02; 8:45 am]
BILLING CODE 4510–43–C